ZONTES

ZT125/155-Z2（EURO V）

Service manual



2021/1/21

Contents

Table of Contents Pages

0 Table of Contents..... 1

1 FRAME&ELECTRONIC COMPONENT

1.1 Electrical device component-1..... 6
Main harness, dump switch, relay, flasher

1.2 Electrical device component-2..... 7
Flameout switch, horn,ignition coil

1.3 Electrical device component-3..... 8
ECU、relay

1.4 Electrical device component-4..... 9
rectifier、Buzzer

1.5 Frame plastic parts..... 10
Line clamp, side cover round glue, fuel tank liner limit glue

1.6 Directional column component..... 11
Lower plate component

1.7 Frame, side bracket..... 12

2 FRAME & ENGINE COMBINATION

2.1 Frame & engine combination 1..... 13
Disassemble guard bar assembly

2.2 Frame & engine combination 2..... 14
Lower shroud bracket、engine

3 INTAKE SYSTEM COMPONENT

3.1 Intake system component..... 15
Air filter filter,Carbon canister

3.2 Throttle valve body component..... 16
Disassemble throttle valve body component

3.3 Replace air filter element..... 17

4 REAR WHELL COMPONENT

4.1 Rear mud board..... 18
Rear mud board

Contents

Table of Contents Pages

4.2 Rear shock absorption…… 19
Demolition after shock absorption, rear shock absorption adjustment
4.3 Rear wheel component 1…… 20
Disassemble the rear rim component, sprocket seat, sprocket
4.4 Rear wheel component 2…… 21
Disassembled rear rim component
4.5 Rear fork component…… 22
Disassembled rear fork component
4.6 Replace the rear brake pads…… 23
4.7 Rear brake main pump adds brake fluid…… 24

5 PEDAL COMPONENT

5.1 Pedal height adjustment…… 25
Shift lever, brake pedal height adjustment
5.2 Right footrest component-1…… 26
Disassemble the right foot support component
5.3 Right footrest component-2…… 27
Decomposition brake pedal component
5.4 Right footrest component-3…… 28
Disassemble the right pedal component
5.5 Left footrest component-1…… 29
Disassemble the left foot support component and the shift lever component
5.6 Left footrest component-2…… 30
Decomposition shift lever component, front left pedal component
5.7 Left footrest component-3…… 31
Disassemble the left footrest component

6 COOLING SYSTEM COMPONENT

6.1 Change the oil and the oil filter…… 32
6.2 Add coolant…… 33
6.3 Change coolant…… 34
6.4 Water tank component 1…… 35
Disassemble the auxiliary water tank component,water pipe
6.5 Water tank component 2…… 36

Contents

Table of Contents Pages

Disassemble water tank component,water tank bracket

7 FRONT FORK COMPONENT

7.1 Throttle/clutch cable clearance adjustment, light height adjustment…… 37

7.2 Replacement clutch cable…… 38

7.3 Replace the throttle cable…… 39

7.4 Steering adjustment…… 40

7.5 Right hand component…… 41

Remove right rear view mirror, right hand rubber sleeve, balance block

7.6 Add brake fluid, rocker adjustment…… 42

7.7 Replace the front brake pads…… 43

7.8 Front wheel component…… 44

Disassemble the front wheel, front disc brake disc, front axle component

7.9 Front mud board & wheel speed sensor component…… 45

Disassemble front wheel speed sensor component, front mud plate component

7.10 Head and headlights component 1…… 46

Remove the headlight

7.11 Head and headlights component 2…… 47

Disassemble headlight component

7.12 Head and headlights component 3…… 48

Disassemble headlight bracket,head cover rear shell

7.13 Speedometer component…… 49

Disassemble speedometer and bracket

7.14 Left hand component…… 50

Disassemble left rear view mirror, left hand rubber sleeve, left switch

7.15 Directional lever component…… 51

Disassemble directional lever

7.16 Front shock absorber, upper plate component…… 52

Disassemble front shock absorber, headlight bracket, faucet lock, upper plate component

7.17 Uplink plate, direction handle block component…… 53

Disassemble the direction of the block, the upper plate

7.18 ABS brake system-1…… 54

Disassemble the hydraulic control unit and bracket

7.19 ABS brake system-2…… 55

Contents

Table of Contents Pages

Releasing brake fluid,FMC tubing

7.20 ABS brake system-3 56

Disassemble FC tubing

7.21 ABS brake system-4 57

Disassemble RMC tubing,RC tubing

8 FUEL TANK COMPONENT

8.1 Fuel tank component 58

Disassemble Fuel tank component

8.2 Fuel tank cover component 1 59

Disassemble fuel tank cover component

8.3 Fuel tank cover component 2 60

Disassemble fuel tank cover component

8.4 Fuel tank cover component 3 61

Disassemble fuel tank cover component

8.5 Fuel tank component 62

Disassemble fuel tank and fuel pump

9 SURROUNDING COMPONENT

9.1 Surrounding component 63

Disassemble surrounding component

10 SIDE COVER COMPONENT

10.1 Side cover component 1 64

Decompose side cover component

10.2 Side cover component 2 65

Decompose side cover component

11 REAR COVER COMPONENT

11.1 Rear cover component 66

Disassemble Rear cover component

11.2 Rear armrests and shelf components 67

Disassemble rear armrests and shelf components

11.3 Tail light component 68

Contents

Table of Contents Pages

Disassemble the taillight component

11.4 Rear mud board component 1…… 69

Disassemble rear fender component,rear fender bracket cover,rear fender bracket

11.5 Rear mud board component 2…… 70

Disassemble rear mud board component,rear turn sinagl

11.6 Battery component(colliod battery)…… 71

Disassemble battery ,electric device box cover

11.7 Battery component…… 72

Disassemble battery、Wake-up switch and charging precautions

12 CUSHION COMPONENT

12.1 Cushion…… 73

Discomponent and component cushion; seat cushion rubber separately purchased parts

13 MUFFLER COMPONENT

13.1 Muffler component 1…… 74

Disassemble muffler component

13.2 Muffler component 2…… 75

Disassemble muffler decorative cover

All the information, illustrations and photographs collected in this manual are compiled according to the latest products. However, there may be some inconsistencies between your motorcycle and this manual due to the continuousimprovement of the product and other changesFor colors or upgrades, please refer to the part codes on the official website. This manual will not be listed in detail; If the part names in this manual are inconsistent with the official website, the official website shall prevail. This manual is compiled on the basis of the chinese version of KD150-Z2 high-seat version. The export version is different from the chinese version with only a few parts, such as decals, ECU version, muffler catalyst, etc. Although the status of such parts are different, the disassembly method is same, so refer to the chinese manual.

©Guangdong Tayo Motorcycle Technolog Co. Ltd All rights reserve

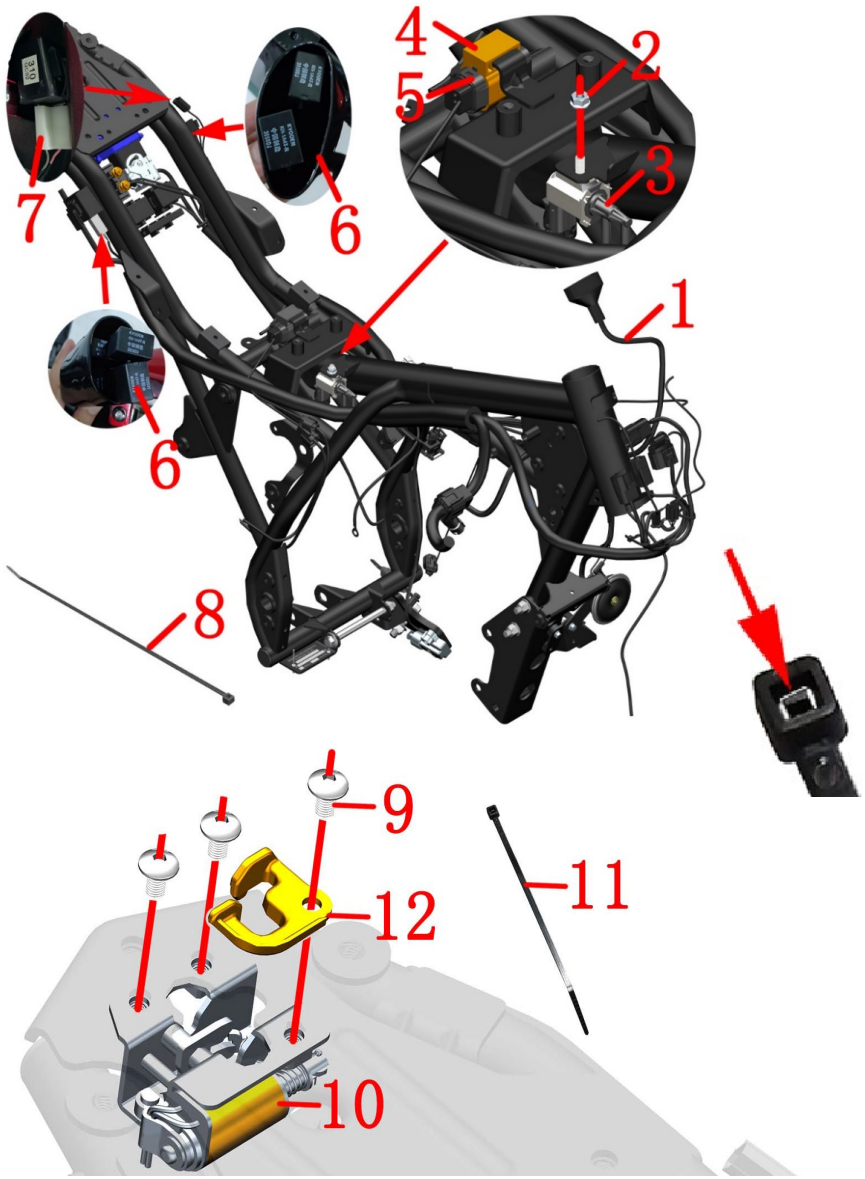

Fig.1 FRAME&ELECTRONIC COMPONENT		Electronic parts COMPONENT 1	CHK ADJ	
NO.	PART NO.	PART NAME	QTY	CAUTION
1	1181200-106000	KD150－Z2 wiring harness assembly	1	
2	1250303-010093	GB6177.1M6（color zinc ）	1	
3	1050954-009000	YH canister solenoid valve	1	
4	1244100-082000	ZT250－R dump switch sleeve	1	
5	1184100-002000	ZT250－S dump switch	1	
6	1184100-017000	ZT250－S fuel-injection relay	6	KH-1A4T
7	1184200-039000	ZT310-R flasher	1	
8	1224100-037000	Grade 0 flame retardant tie (black 3.6×295)	10	
9	1251100-101000	Non-standard bolt M6×12 (304 stainless steel)	3	
10	1274100-058000	ZT310 Electric seat lock	1	
11	1224200-205000	ZT310 Electric seat lock guide block	1	

PROCEDURE:

●Main harness Different plug-in methods are different, please unplug all the electrical components connected to themain thread according to the actual operation. It needs to use a word screwdriver, forceps, scissors andother tools to assist. The binding(8) or (11)can be picked out by using scissors.

●Flasher and dump switch

Remove the flasher(7),remove the rubber sleeve(4) that connects to the mounting bracket on the frame, and remove the dump switch(5).

●Relay

Pull out 5pcs electric injection relay(6)directly.

●Seat lock

Find and take off the plug of the seat lock , and cut off binding(11).Using 4# inner hexagon remove 3pcs bolts (9),then take off seat lock(10).

●Canister solenoid valve

First unplug the two oil pipes connecting the carbon canister to the solenoid valve, unplug the cable connector and then loosen the nut (2)and remove the solenoid valve (3).

CAUTION：

●It must be dismantled them first, such as the cushion, fuel tank component,sider cover, tail dress and so on.

●In order to avoid the improper contact of the bending electrical parts, please pay attention to the direction and angle of force when plugging the electrical parts, so as to avoid the improper contact of the bending electrical parts. No violent operation.

●Please notice the limit of the bracket when dismantling dump switch sleeve, beware of hurting your fingers.

●Additional buide block for motorcycles manufactrued after 21 October 2020.Early-produced motorcycles can be purchased and installed on their own.

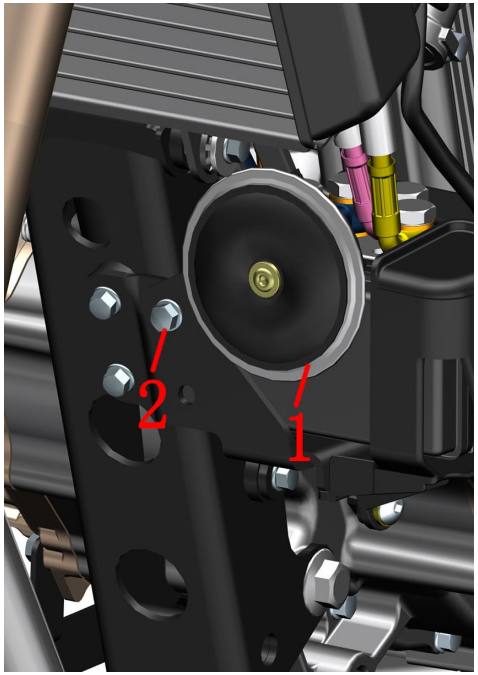



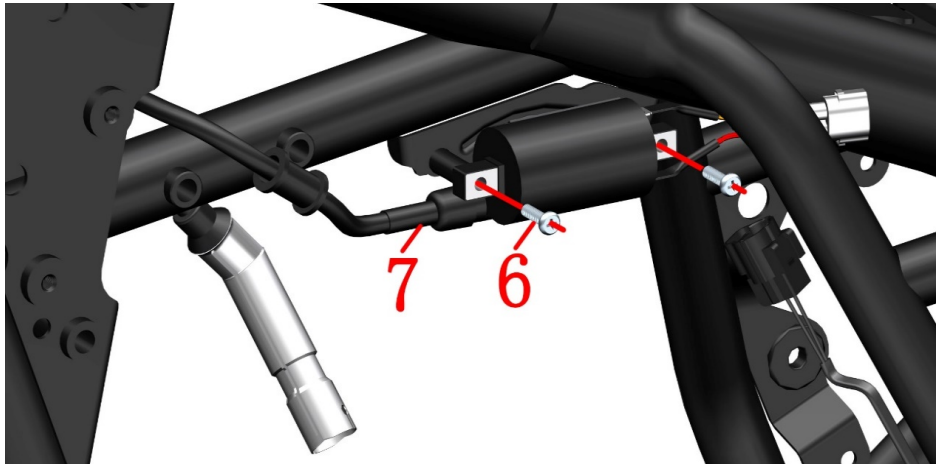

Fig.2 FRAME&ELECTRONIC COMPONENT		Electronic parts COMPONENT 2	CHK ADJ	
NO.	PART NO.	PART NAME	QTY	CAUTION
1	1184200-004000	ZT310 horn	1	
2	1251112-001093	M6×16 Hexagon flange bolts (color zinc)	1	
3	1224100-037000	Grade 0 flame retardant tie (black 3.6×295)	2	
4	1250205-040095	GB70.1 inner hex bolt M8×16（color Zinc）	2	
5	1184100-012000	ZT250－S shut down switch	1	
6	1250201-032093	GB818M5×16 (environmental color)	2	
7	1184200-104007	ZT310 EFI ignition coil (with high voltage line)	1	

PROCEDURE：

●Horn

Take off the plug of horn, take the horn(⑴ by one hand use 8# sleeve remove bolts ⑵ by another hand,then take off the horn⑴.

●Shut down switch

Find and take off the plug of the shut down switch⑸ , cut ribbon ⑶.Using 6# inner hexagon socket remove 2pcs bolts⑷ then take off shut down switch⑸.

●Ignition coil

Take off the plug of the ignition coil.Remove the crosshead bolts⑹ with a cross screwdriver and remove the ignition coil⑺.

CAUTION：

●When Take off the plug can't drag any cable.



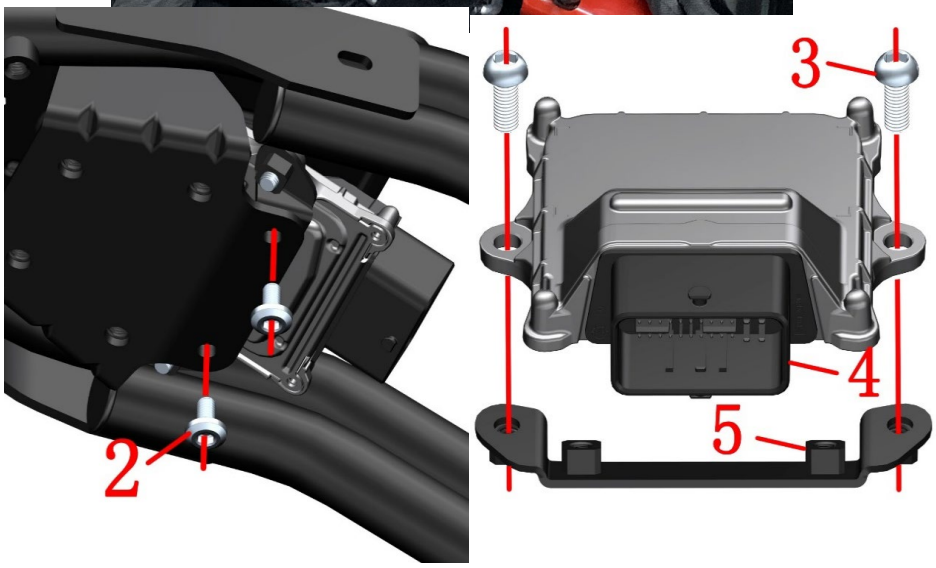

Fig.3 FRAME&ELECTRONIC COMPONENT		Electronic parts COMPONENT 3	CHK ADJ	
NO.	PART NO.	PART NAME	QTY	CAUTION
1	1184100-010000	Starting relay	1	
2	1251100-119093	Non-standard bolt M6×12 (environmental color)	2	
3	1251100-120093	Non-standard bolts M6×16 (environmental color)	2	
4		MSE6.0 controller	1	【1】
5	1271200-080000	KD150-U Bosch ECU bracket	1	

PROCEDURE:

●Relay

Turn off the positive and negative.protective rubber caps (red for the positive and black for the negative) of the starter relay(1).Using 10#sleeve remove nuts then remove the positive and negative connectors, and screw the nut back onto the relay stud to preventloss.Take off plug of the start relay and main hamess.

●ECU

Turn the ECU cable plug clockwise and unplug it. Remove the bolt (2) at the bottom of the frame with a 5# hexagon socket, and then remove the ECU assembly.

Using 5# inner hexagon socket remove 2pcs bolts(3) then take off the ECU(4) from the ECU bracket(5)。

CAUTION:

●When Take off the plug can't drag any cable.

●【1】If the part code is empty, it indicates that the part has multiple states or colors. For specific states, please find the corresponding state or color in the official website parts. Only the disassembly and assembly steps are explained here, and the color and status do not affect the disassembly and assembly process. This description will not be added if there is such a situation later in this manual.

●Please refer to the driver's manual for details about the related content of the EFI fault code. The latest electronic version of the driver's manual can be downloaded from the corresponding model introduction page of the official website.

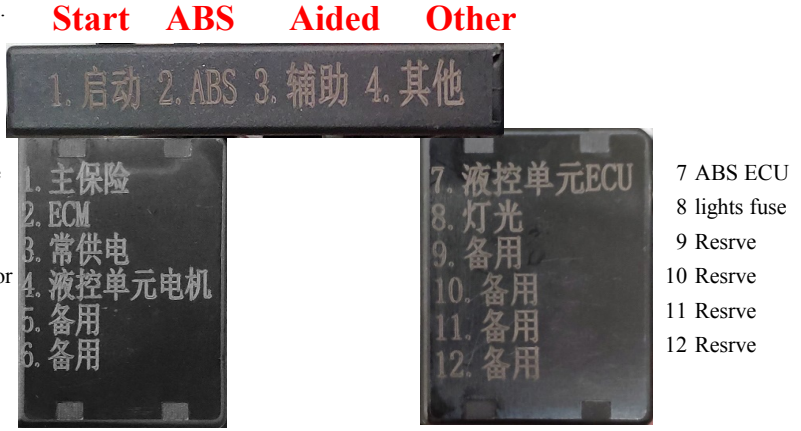

1 Main fuse
2 ECM
3 ACC
4 ABS motor
5 Resrve
6 Resrve
7 ABS ECU
8 lights fuse
9 Resrve
10 Resrve
11 Resrve
12 Resrve

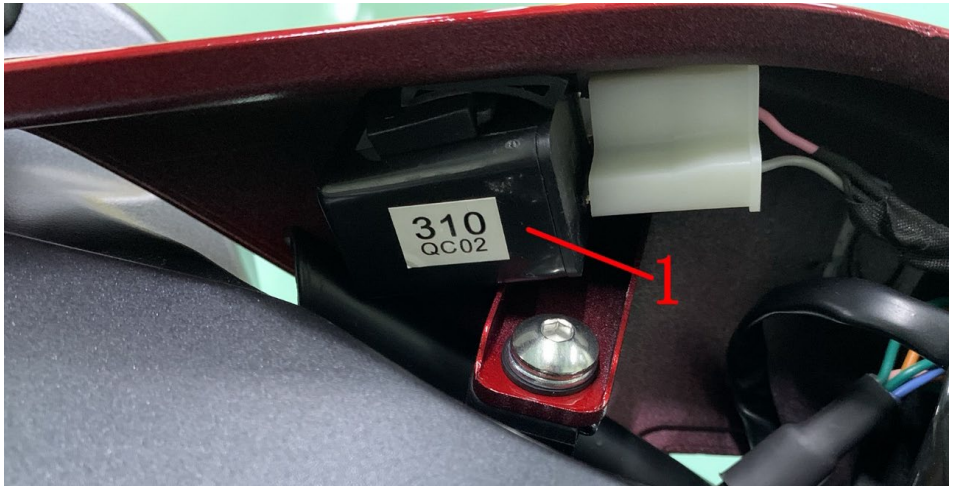

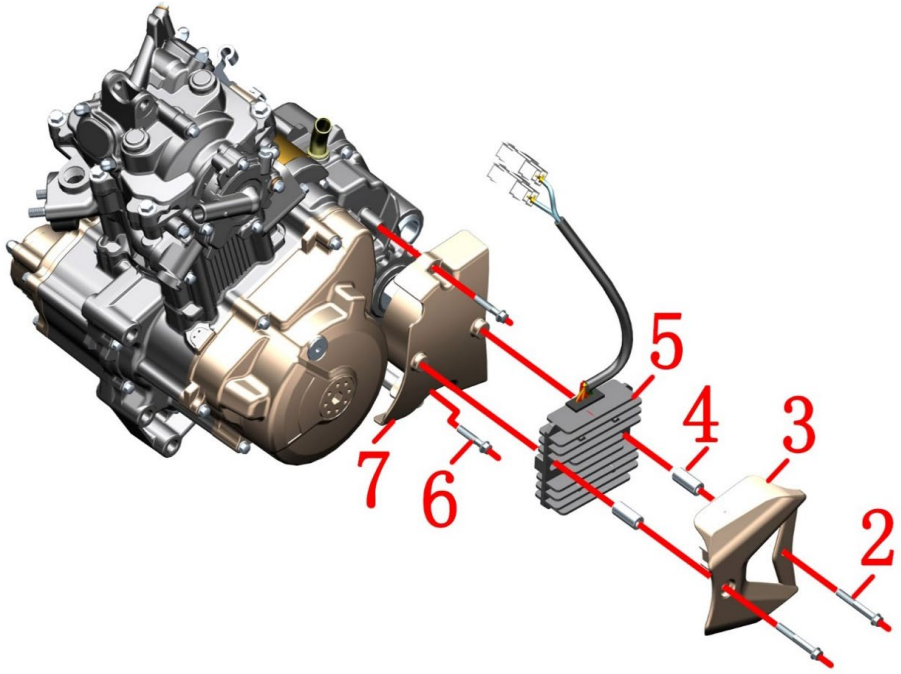

Fig.4 FRAME&ELECTRONIC COMPONENT		Electronic parts COMPONENT 4	CHK ADJ	
NO.	PART NO.	PART NAME	QTY	CAUTION
1	1184200-039000	ZT310-R flasher	1	
2	1251112-003093	M6×45 Hex flange surface 9.8 bolt (color zinc)	2	
3		KD150-U rectifier shroud	1	
4	1251700-146000	Bushing Φ12 × Φ6 × 26.5 (environmental protection color)	2	
5	1181200-085000	KD150-U rectifier	1	
6	1251112-002093	M6×30 Hexagon flange bolts (color zinc)	2	
7		KD150－U engine left rear cover	1	

PROCEDURE：

●Flasher

Find and take off the flasher.

●Rectifier

Using 8#sleeve remove 2pcs bolts(2),then take off the rectifier shroud(3)and bushing(4).

Find and take off the rectifier plug,then take off the rectifier(5).

●Engine left rear cover

Using 8#sleeve remove 2pcs bolts(6),then take off the engine left rear cover(7).

CAUTION：

●When Take off the plug can't drag any cable.

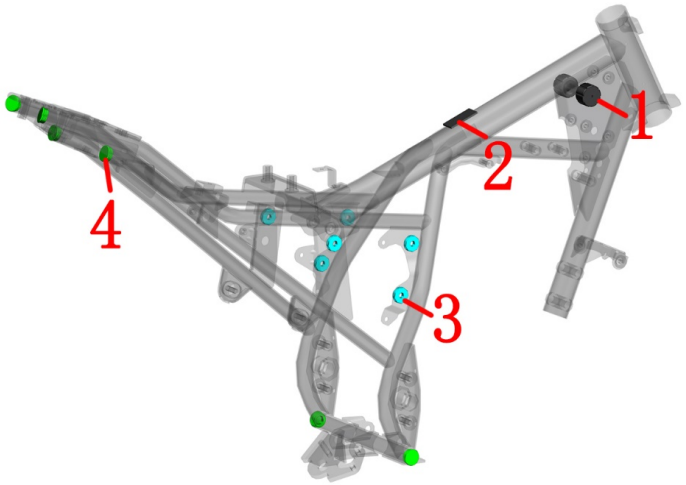

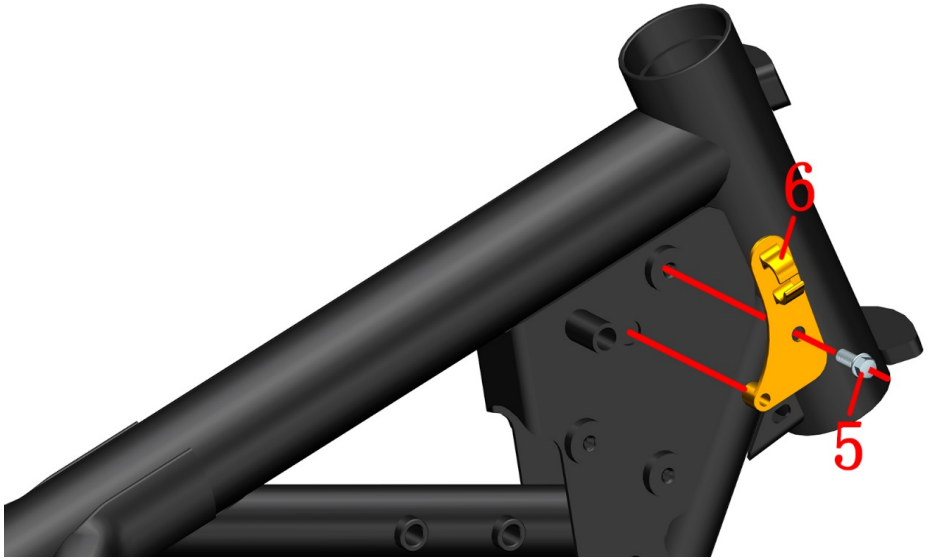

Fig.5FRAME&ELECTRONIC PARTS COMPONENT		Frame plastic parts	CHK ADJ	
NO.	PART NO.	PART NAME	QTY	CAUTION
1	1241200-044000	KD150-U fuel tank liner limit glue	2	
2	1240300-007000	HJ125－6 Battery rubber gasket	1	
3	1244100-002000	ZT250－S Side cover round rubber	6	
4	1244100-061000	ZT250 anti-water rubber of frame	6	
5	1251112-001093	M6×16 Hexagon flange bolts (color zinc)	1	
6	1221200-058000	KD150-U clamp	1	

PROCEDURE：

● Fuel tank liner limit glue

Push out the fuel tank liner limit glues(1) then take off.

●Battery cushion

Put off the battery cushion (2)directly by hand.

●Side cover cushion

Remove the side cover cushion(3)with your hand directly.

●Frame waterproof rubber plug

Remove the 6pcs frame waterproof rubber plugs (4)with your hand directly.

●Clamp

First,take the throttle line off the clamp; hold the clamp by one hand,use 8# sleeve remove bolt(5) by another hand， take off clamp(6).

CAUTION：

●It must be dismantled them first, such as the cushion, fuel tank component, sider cover, tail dressand so on.

●All parts should be correctly assembled.

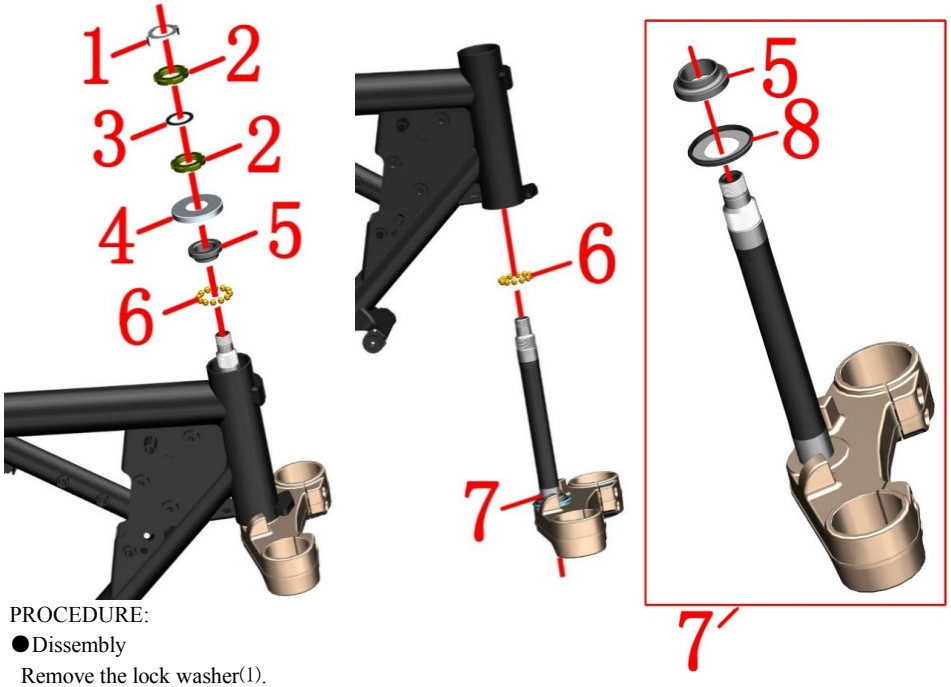

Fig.6 FRAME&ELECTRONIC COMPONENT		Directional column component	CHK ADJ	
NO.	PART NO.	PART NAME	QTY	CAUTION
1	1134100-007000	ZT250－S Adjusting nut locking washer	1	
2	1251300-046093	Direction column adjusting screw nut M24X1 (environmental color zinc)	2	
3	1244100-015000	ZT250－S Adjusting nut rubber pad	1	
4	1224100-005000	Steering stem dust cap (Up)	1	
5	1130900-024000	Upper bead top	1	
6	1130900-022000	Upper connect iron ball	2	
7	1134100-015000	ZT250－S lower connection borad(self made/with ball head) assembly	1	
8	1224100-006000	Steering stem dust cap(down)	1	【1】

PROCEDURE:

●Dissembly

Remove the lock washer(1).

Remove the top adjusting nut (2) by using a special four-jaw or hook wrench tools.

Remove the rubber pad (3).

With one hand to hold down the down connected plate assembly (7), the other hand use a special four-jaw set or hook wrench to remove the adjusting nut(2).

Remove the upper dustproof cover(4).

Remove the down connected plate component(7).

Remove the axletee ring (5) of the upper riser and the steel ball(6).

Remove the down connected plate component(7).

Remove the steel ball of the down connected plate component(7).

●Assemble

When reassembling, the conjoined steel beads should be painted lubricating grease,attention to the dosage.

The torque of rating nut which closes to upper dustproof cover is required to about 14N.m.so as to be able to rotate out of nimbleness.

The top adjusting nut only needs to rotate to the bottom of the nut groove alignment, not too tight to prevent the rubber pad (3) from deformation too larg.

CAUTION：

●Remove the head part component, handlebarcomponent and front shock absorber component first.

●Please pay attentin to fix the awaiting repair motorcycles during disassembly,prevent dumping by accident.

●Please check whether the steel beads of the conjoined body have abnormal phenomena such as partial abrasion and rust.If YES, please buy the regular accessories on ZONTES official website, if not, please be sure to grease the old grease and repaint the lubricating grease on it.

●It must be to check whether the steel ball is available during reassembly.

●It must be reasonable to adjust the steering, too loose will cause the locomotive to brake slightly, and the locomotive will shake slightly, too tight can lead to inflexibility, resulting in safety hazards.

●If you have the ability and the right tool, you can change the shaft ring (5) and the dustproof cover (8).During the replacement process, pay attention to the protection of the lower connected plate. After replacement, it must be to check the parallelism of the column and the damping hole, the vertical degree of the vertical column and the lower connected plate.

●【1】the down connected plate (selfmade/with blowout patch) component(7), has been contains the Steering column down dustproof cover(8).

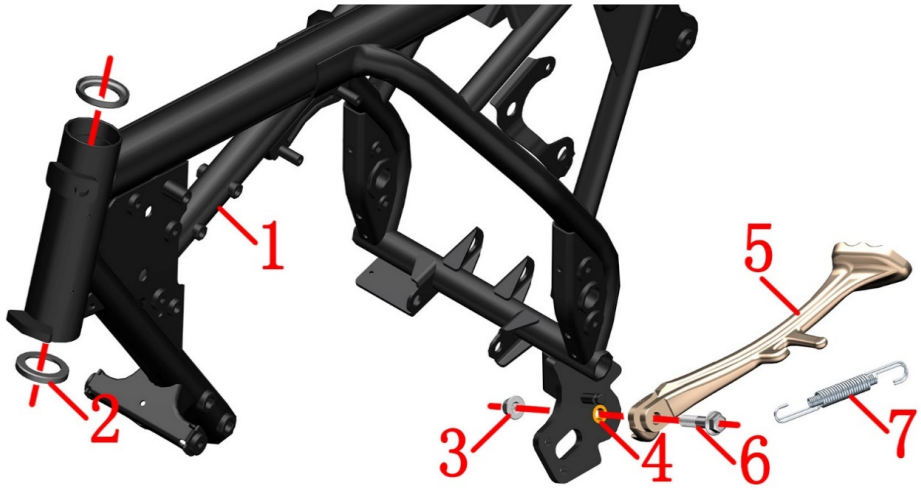

Fig.7 FRAME&ELECTRONIC COMPONENT		Frame, side bracket	CHK ADJ	
NO.	PART NO.	PART NAME	QTY	CAUTION
1		Frame after-sales component(contains fix loop and nameplate)	1	
2	1130900-026000	ZT250－S upper steel bowl	2	after sales
3	1251300-057093	Non-standard nut M10×1.5（dacromet）	1	
4	1251700-025091	ZT250－S side stand sleeve	1	
5		Side support	1	
6	1251100-088094	Non-standard nut M10×1.5×43（dacromet）	1	
7	1264100-001000	ZT250－S side stand spring	1	

PROCEDURE：

●Checking the cushion loop

Checking whether the cushion loop (2) is frayed, if as it, please replace it. Fix the cushion loop well and paint the lubricating grease on it with appropriate tool.

●Sider support

Using the cross screwdriver to remove the side support spring(7), and guard against the personal injury caused by spring contraction, use 14#sleeve or plum blossom wrench remove the nuts (3) and then remove bolts (5) . Remove the side support (5) and bush(4), paint the lubricating grease on the bush(4) when re-assembling ,then put it into the frame(1).

CAUTION：

●Remove the wind deflector component, handle bar component, steering column component first.

●Paint the lubricating grease on the cushion ring to decrease the rotary resistance of front forklift.

●Pay attention to safety when mounting side support spring.

●All parts should be correctly assembled.

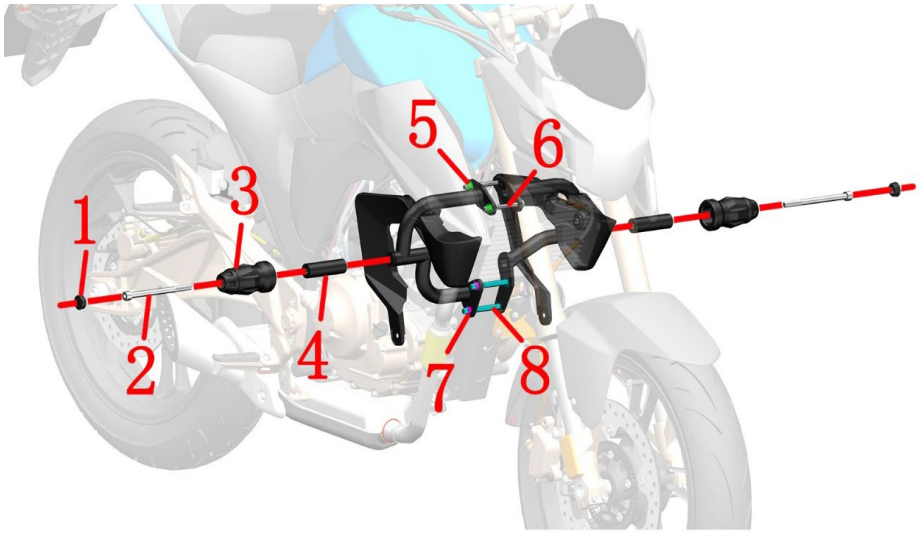

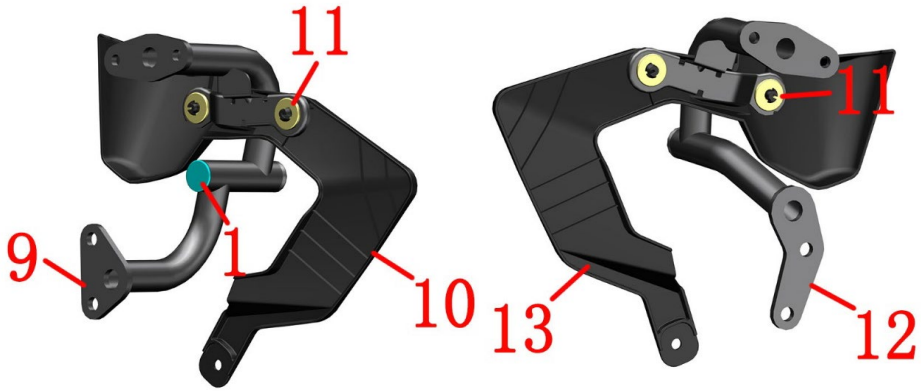

Fig.1 FRAME & ENGINE COMBINATION		Frame & engine combination 1	CHK ADJ	
NO.	PART NO.	PART NAME	QTY	CAUTION
1	1244100-061000	ZT250 anti-water rubber of frame	2	
2	1251100-142000	Non-standard hexagon socket bolt M10 × 1.5 × 130	2	
3	1244100-089000	ZT250-R guard bar anti-drop glue	2	
4	4111200-007051	KD150－Z2 crash bar rubber mounting sleeve (dark gray matte)	2	
5	1250305-002091	GB6187.1 M8（White zinc）	2	65±5N.m
6	1250105-042091	GB5789M8 × 75 (level 10.9 / white zinc)	2	
7	1251300-057093	Non-standard nuts M10×1.5 (color zinc)	2	65±5N.m
8	1251100-085093	Non-standard bolt M10×1.5×75 (color zinc)	2	
9	4111200-006051	KD150－Z2 right crash bar (dark gray matte)	1	
10	1221200-089000	KD150－Z2 right side of water tank cover	1	
11	1244100-002000	ZT250－S Side cover round rubber	4	
12	4111200-004051	KD150－Z2 left crash bar (dark gray matte)	1	
13	1221200-088000	KD150－Z2 left side of water tank cover	1	

CAUTION：

●Use the appropriate tools to support the whole vehicle to prevent accidents caused by the dumping of the vehicle during the disassembly process; single operation is strictly prohibited.

●All standard parts must meet the standard torque value during reassembly.

PROCEDURE:

●Guard bar component

First remove the lower fairing assembly.

Take off rubber(1).

Grasp the right crash bar assembly firmly, and use 8# inner hexagon to remove the hexagon socket bolt(2); remove the protecting rubber (3) and install the shaft sleeve (4).

Refer to the above steps to remove the anti-drop glue (3) and install the shaft sleeve (4) on the left.

One person fixes the 2 bolts (8) at the bracket with a 14# sleeve first, and the other uses a 14# sleeve to remove the nut (7); after removing the bracket bolts, one person fixes the upper part of the crash bar with a 12# sleeve Another person uses a 12# sleeve to remove the nut (5). Then take out the left crash bar assembly and the right crash bar assembly.

●Right crash bar assembly

Remove the waterproof rubber plug (1) from the right crash bar assembly, and then pull out the right water tank cover (10) from the round rubber (11) on the right crash bar (9).

●Left crash bar assembly

Pull out the left water tank cover (13) from the round rubber (11) on the left crash bar (12).

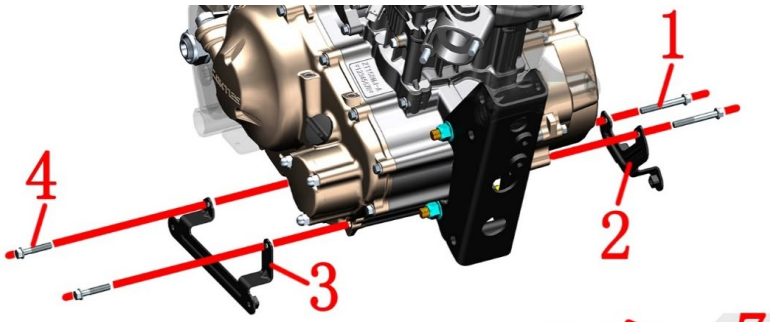

The engine hang has not been removed

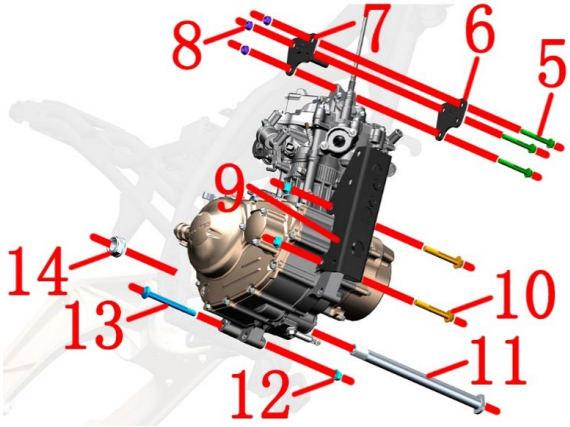

The engine hang has been remove

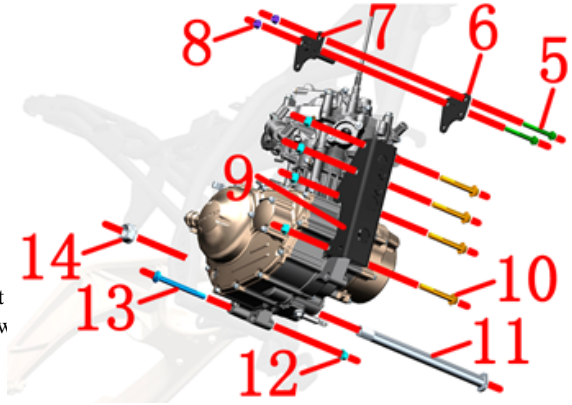

After removeing the upper suspension hole of the enging,the corresponding left and right hangning piece switch to a new state and reduce 1 pcs bolt(5) and nut(8).

Fig.2 FRAME & ENGINE COMBINATION		Frame & engine combination 2	CHK ADJ	
NO.	PART NO.	PART NAME	QTY	CAUTION
1	1251112-003093	M6×45 Hex flange surface 9.8 bolt (color zinc)	2	
2	1271200-138000	KD150－Z2 Left bracket of lower shroud	1	
3	1271200-139000	KD150－Z2 Right bracket of the lower shroud	1	
4	1251112-002093	M6×30 Hexagon flange bolts (color zinc)	2	
5	1250105-017091	GB5789 M8×65(zinc)	3	
6	4021200-030000	KD150－U frame left hanging piece	1	
7	4021200-031000	KD150－U frame right hanging piece	1	
8	1250305-002091	GB6187.1 M8（White zinc）	3	
9	4021200-029000	KD150－U frame bracket	1	
10	1251100-085093	Non-standard bolt M10×1.5×75（dacromet）	2	
11	1252200-068000	KD150－U rear flat fork hollow shaft	1	
12	1251300-057093	Non-standard nut M10×1.5（dacromet）	3	65±5N.m
13	1251100-086093	Non-standard bolt M10×1.5×112（dacromet）	1	
14	1251300-067000	ZT250－R rear wheel hollow shaft nut	1	

PROCEDURE:

●Shroud bracket

Using 8# sleeve remove 2pcs bolts(1) then take off the bracket(2),remove 2pcs bolts(4) then take off the bracket (3). Reassemble the bolts to the engine after removing the bracket to prevent oil leakage.

●Hanging piece

First use a 12# sleeve to cover the head of the bolt (5), then use a 12# sleeve to remove the nut (8), remove the bolt (5), the upper right hanging piece (7) and the upper left hanging piece (6).

●Bracket, Engine hanger

First use a 14# sleeve to cover the head of the bolt (10) at the bracket, and then use a 14# sleeve to remove the nut (12) without removing the bolt and bracket (9).

Use a 14# sleeve to cover the head of the bolt (13) at the bottom of the engine, and then use a 14# sleeve to remove the nut (12) without removing the bolt (13).

Fix the head of the rear fork shaft (11) with a tool, and then use a 30# sleeve to remove the nut (14), take off the rear fork shaft (11) and then remove the rear flat fork shaft (11) and press down the rear fork assembly away from the engine.

Two people hold the left and right boxes of the engine at the same time; one person removes the 3 bolts (5) ,the right hanging piece(7),the left hanging piece(6), and the bottom bolt (13).

Support the engine to shift to one side, and pay attention to safety during the movement. Put the engine flat on the ground.

CAUTION:

●Using appropriate tools to support the motorcycle to prevent motorcycle dumping during disassembly. Single operation is forbidden.

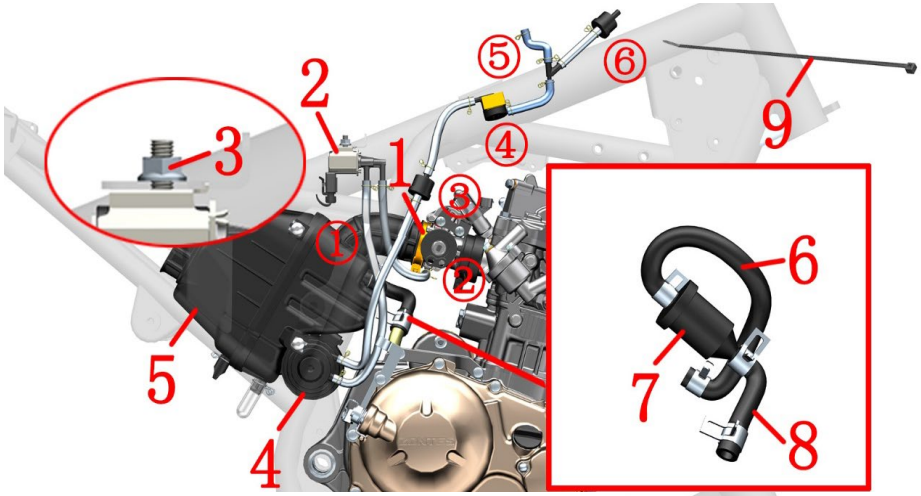

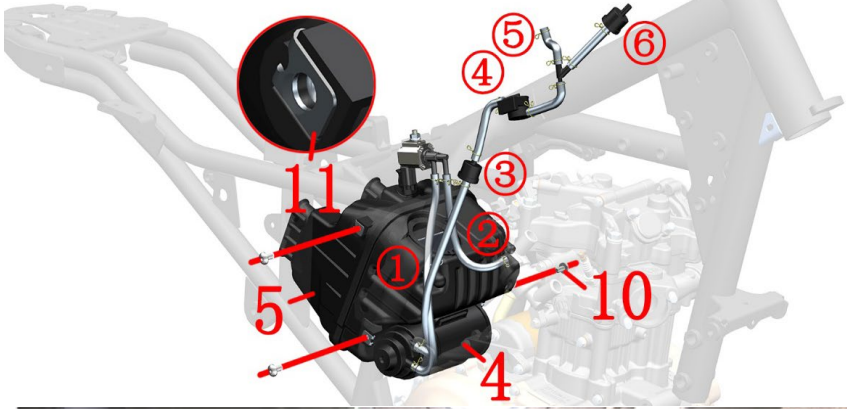

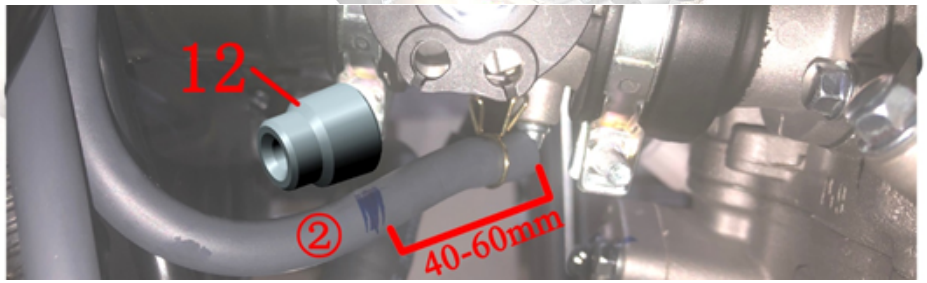

Fig.1 INDUCTION SYSTEM COMPONENT		Intake system component	CHK ADJ	
NO.	PART NO.	PART NAME	QTY	CAUTION
1	1051356-012000	φ42 × 10 pipe hoop assembly	1	
2	1050954-009000	YH canister solenoid valve	1	
3	1250303-010093	GB6177.1M6（color zinc ）	1	
4	1221200-125000	KD150－G1 Carbon Canister (Special for Euro V)	1	
5	1221200-033000	KD125-U air filter	1	
6	1246200-041000	KD150-U oil and gas separator intake pipe	1	
7	1221200-124000	KD150-U external oil and gas separator (no filter element) assembly	1	
8	1246200-042000	KD150-U oil and gas separator outlet pipe	1	
9	1224100-037000	Grade 0 flame retardant tie (black 3.6×295)	1	
10	1251100-101000	Non-standard bolt M6×12 (304 stainless steel)	3	
11	1251300-063093	Plywood M6×11×15（color zinc）	3	
12	1051754-001000	1.0 × 5.5 × 6 over－oil pin	1	

PROCEDURE:

●Air filter

First pull out the tubing connected to the check valve ③ from the check valve ③， and then pull out the oil pipe ⑤ connecting the fuel tank after the oil tank is removed. (Note: The check valve ⑥ does not need to be connected to any place in the fuel tank).and unplug the oil pipe ① connecting the carbon canister to the solenoid valve and the oil pipe ② connecting the solenoid valve to the throttle body respectively.

Remove the side cover, seat cushion, rear shock absorber, rear tail skirt, etc. to facilitate subsequent disassembly of the air filter and throttle body.

First use 4# inner hexagon to remove the 3 bolts ⑽ on both sides of the frame.

Loosen the hose clamp assembly ⑴ at the end of the air filter and move the clamp out toward the air filter, and pull out the air filter outlet pipe from the throttle valve body.

Use pliers to clamp the hoop on the gas separator outlet pipe ⑻ and pull out the gas separator outlet pipe ⑻, and then plug it with the rubber plug to prevent foreign matter from entering and damaging the engine.

Remove the air filter and carbon canister assembly.

Take off 3pcs plywood ⑾ from the air filter⑸,remove the carbon canister⑷ from the air filter⑸. CAUTION:

●Regularly check whether the filter element of the carbon tank and air filter is not ventilated, otherwise it may cause the oil supply to affect the driving experience.

●The 2 oil pipes of the canister solenoid valve cannot be connected wrongly.

●Attention when disassembling the clamp

●It should be no crimp, entanglement and other phenomena.

●Starting from November 6, 2020, add oil and gas separator assembly and change the status of the carbon canister.

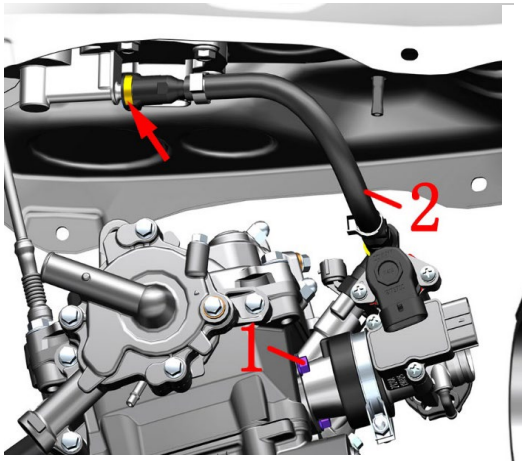

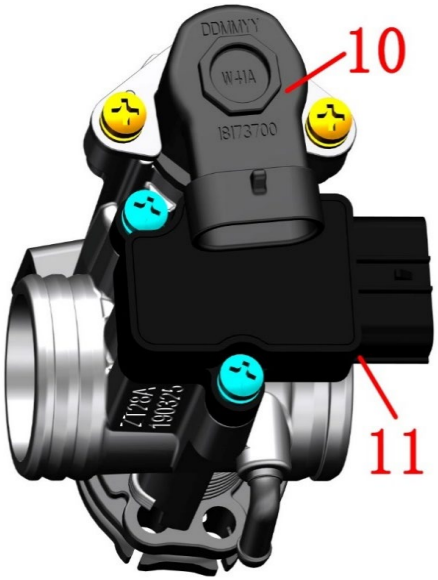

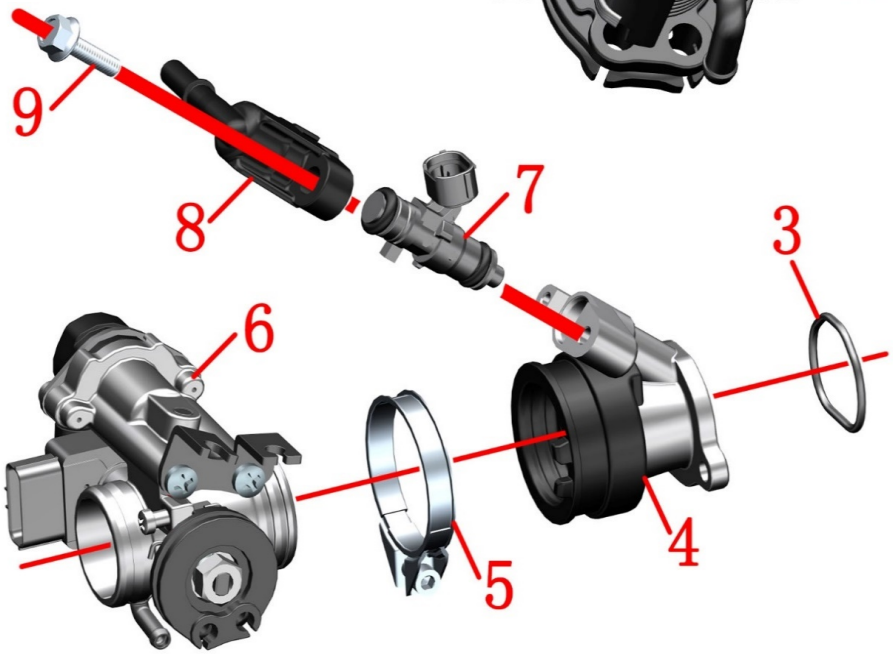

Fig.2 INDUCTION SYSTEM COMPONENT		Throttle valve body component	CHK ADJ	
NO.	PART NO.	PART NAME	QTY	CAUTION
1	1251112-001093	M6×16 Hexagon flange bolts (color zinc)	2	
2	1050956-010000	KD150-G1 EFI High Pressure Tubing Sub-assembly	1	
3	1051468-007000	31.8×2 fluorine rubber O-ring	1	
4		Intake manifold assembly	1	
5	1051356-010000	Φ45×10 pipe clamp assembly	1	
6		Throttle body assembly	1	
7	1050968-003000	EV14 injector G06	1	
8	1050968-002000	ZT1P58MJ injector holder	1	
9	1250105-138093	GB5789M6×20 (environmental color)	1	
10	1050956-005000	DLA-mini stepless motor 5mm	1	after-sales
11	1050954-024000	CTS three-in-one sensor	1	

PROCEDURE:

●High-pressure oil pipe

Press the anti-trip buckle on the high-pressure fuel pipe (2) and then connect the oil pan to contain the remaining fuel. Be careful not to let the fuel drip onto the bike body.

●Throttle valve body assembly

Unplug the connector of the throttle valve body, remove the throttle cable and use an 8# wrench to remove the 2 bolts (1) Remove the throttle valve body assembly.

Remove the O-ring (3), check carefully for damage before reinstalling.

Use a 10# sleeve to remove the bolt (9) and then remove the retainer (8), and remove the fuel injector (7).

After loosening the clamp (5), remove the throttle valve body assembly (6), and then remove the clamp (5).

●Throttle valve body after-sales parts

Throttle valve body assembly already contains stepper motor (10) and sensor (11). Remove the 2 bolts and then remove the clip, and then remove the stepping motor (10); then remove the 2 bolts that fix the sensor to remove the sensor (11).

CAUTION:

●First it need to remove the cushion,side cover,oil tank outside cover and liner,rear shock absorber and electrical device box etc.

●When removing the high pressure oil pipe,It is sure to operate until the engine and muffler are completely cooled.

●Fireworks, answering or dialing should be strictly prohibited near the car-breaking site to prevent accidents.

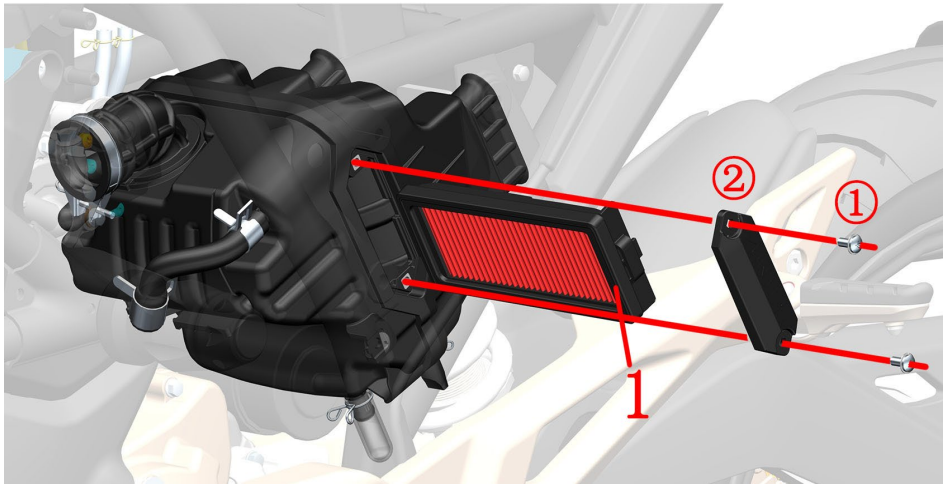

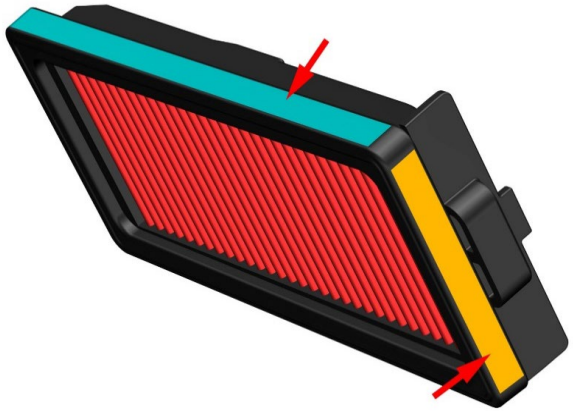



Fig.3 INDUCTION SYSTEM COMPONENT		Replace air filter element	CHK ADJ	
NO.	PART NO.	PART NAME	QTY	CAUTION
1		KD125－U air filter element	1	

ROCEDURE:

●Filter element

If you need to maintain the filter element of the air filter, remove the seat cushion, the right side cover Take the two standard parts ① out of air filter with the tool, dismantle the box cover ②Grasp the rubber strips on the filter (both sides shown in yellow) and pull the filter element (1) out. Blow the dust off the filter core by blowing dust gun in the filter element. If the filter paper is damaged, it should be replaced in time.If the blowback causes the dust to be unable to clean up, the engine will be damaged or the induction resistance will become larger and affect the driving experience.When assembling, apply a small amount of engine oil on the upper and lower sides of the rubber strip (shown in cyan as shown in the figure) to reduce assembly resistance.

●Oil pipe and water pipe

Avoid water into the air filter when washing the motorcycle. Can pulled out the oil pipe③ and water pipe④ to release if into small water.keep no water inside before staring the engine. Inspecte the oil pipe regularly if more oil is accumulated should be released in time.

CAUTION:

●Regularly check whether the filter element of the carbon tank and air filter is not ventilated, otherwise it may cause the oil supply to affect the driving experience.

●When blowing dust, pay attention to maintain a certain distance to avoid excessive damage to the filter element.

●The filter element should be checked every 5000 kilometers or 15 months; it should be replaced every 10,000 kilometers or 30 months.

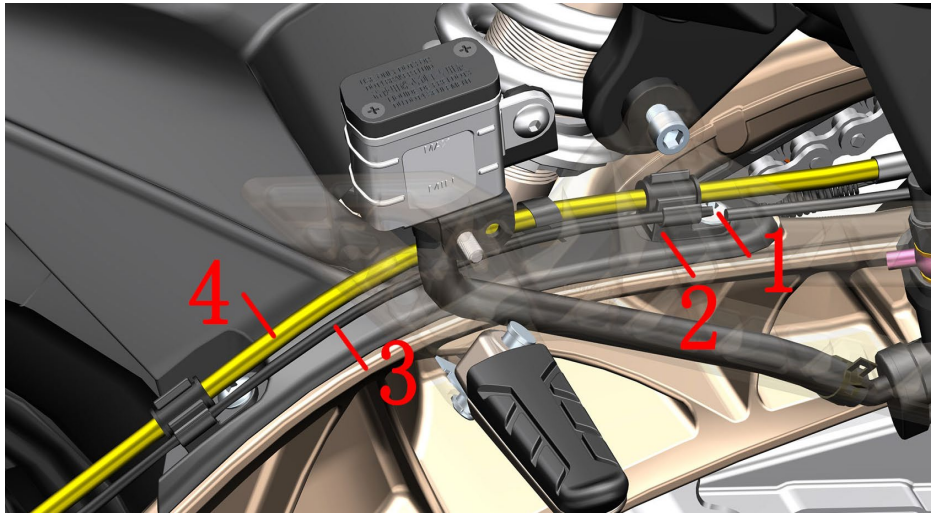

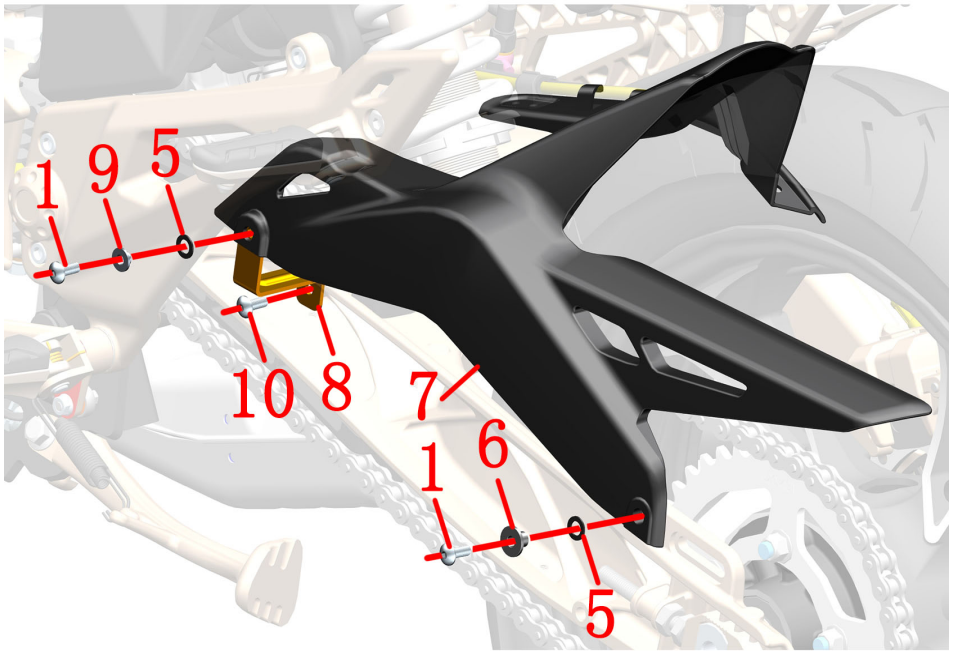

Fig.1 REAR WHELL COMPONENT		Rear mud board	CHK ADJ	
NO.	PART NO.	PART NAME	QTY	CAUTION
1	1251100-102000	Non－standard bolt M6×16(304 stainless steel)	4	
2	1224200-003000	ZT310－Z Rear disc brake pipe clamp	2	
3	1184200-045000	DF30 wheel speed sensor	1	
4	1100100-564000	KD150－U brake hose RC－HU segment	1	
5	1244100-052000	Buffer rubber of flanging bushing (φ8.5×φ14×1)	2	
6	1251700-059093	Flanging bushingφ6.4×φ9×8＋φ18×2(environmental color)	1	
7	1221200-040000	KD150－U rear inner mud board	1	
8	1271200-068000	KD150－U rear inner mud board bracket	1	
9	1274100-057095	Flanging bushing φ6.2×φ8.5×3.5＋φ14×1.5	1	
10	1251100-101000	Non－standard bolt M6×12(304 stainless steel)	1	

PROCEDURE:

●Rear inner mudguard

First of all, pull out the braking oil tube(4) and wheel speed sensor cable(3), which are on the right side of rear inner mudguard,from the rear disc brake pipe clamp(2).

Using 4# inner hexagon socket remove 2pcs bolts(1),take off the brake pipe clamp(2).

Using 4# inner hexagon socket remove 2pcs bolts(1) on the left of the rear mud board,take off the flanging bushing(9),bushing(6) and cushion rubber(5);remove rear mud board(7).

Remove the bolt(10) fix the rear mud board bracket(8),then take off the bracket.

CAUTION:

●Using suitable tools to support the motorcycle, in case of accidents caused by motorcycle falling down. Single person operating is prohibited.

●Stay alert during the manipulation and avoid accident.

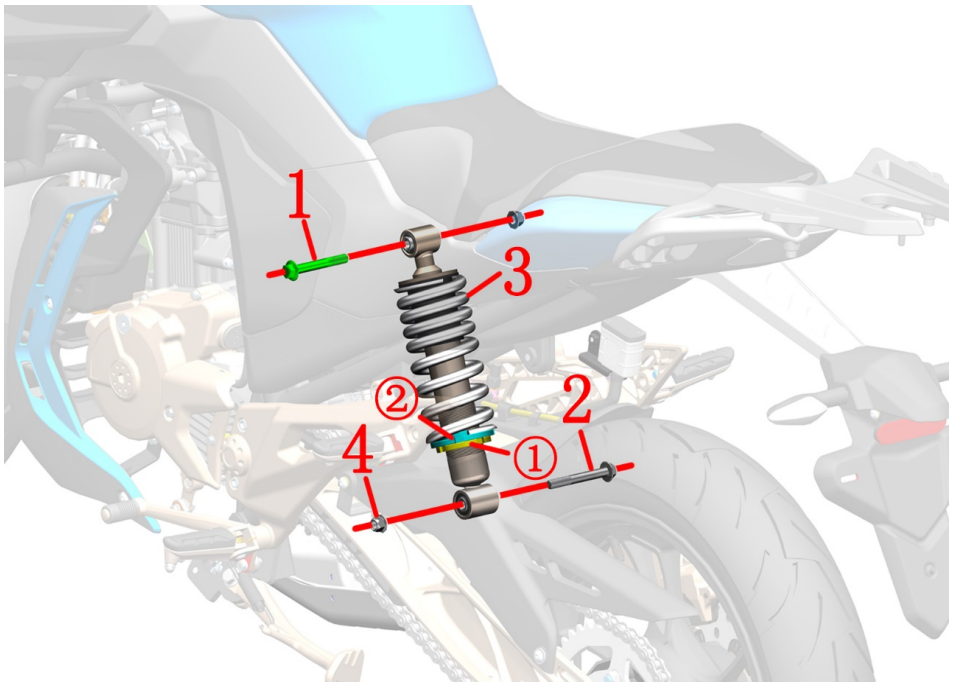

Fig.2 REAR WHELL COMPONENT		Rear shock absorption	CHK ADJ	
NO.	PART NO.	PART NAME	QTY	CAUTION
1	1251100-085093	Non－standard bolt M10×1.5×75(dacromet)	1	
2	1251100-132003	Non－standard bolt M10×1.5×80(dacromet)	1	
3		Rear shock absorption	1	
4	1251300-057093	Non－standard nut M10×1.5(dacromet)	2	65±2N.m

PROCEDURE:

●Rear shock absorber

Put down side stand. Person 1: Turn the handling bar to left end with left hand; hold tight the rear pedal with right hand and lean the motorcycle to left side.Another person used a wooden stool to put a soft rubber cushion on the right side muffler back pressure bag of the bike to support the whole bike and let the rear wheel slightly off the ground.

After supporting the whole bike, use a 14# wrench to fix the nut (4) at the bottom of the shock absorber. One person uses a 14# sleeve on the right to loosen the bolt (2) counterclockwise and remove the nut (4).

Person 1 shake slightly the rear wheel up and down. Person 2 drag out bolt(2).

Person 1 fix the head of the bolt(1) with a 14# sleeve,person 2 remove the nut (4) with a 14# sleeve.Lift the rear shock absorber(3) towards the arrow direction and drag out bolt(1). Take off the rear absorber at last.

●Adjust the rear absorber

Using hook spanner to loosen adjustive nut①. Rotate adjustive nut②. If the nut is rotated towards the arrow direction, the spring becomes harder. Conversly, the absorber is softer. Tighten the adjustive nut① until the absorber is under suitable status. Please adjust in a reasonable range. Riding experience would be influenced either the absorber is too soft or too hard.

CAUTION:

●Disassemble seat, L,side cover, R, side cover, bolts on front parts of rear cover and rear inner mudguard.

●Using suitable tool to support the motorcycle. Avoid accidents caused by falling motorcycle. Single person manipulation is prohibited.

●All the standard parts need to reach standard torque while reassembling.

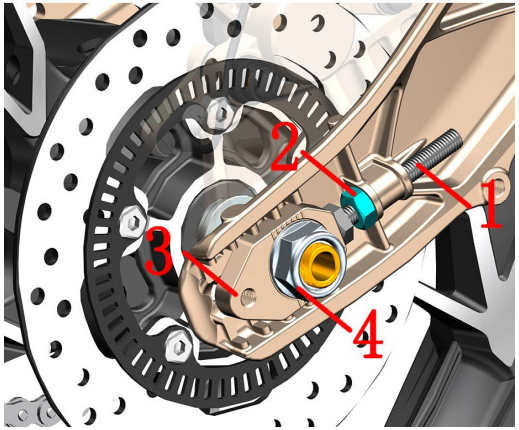

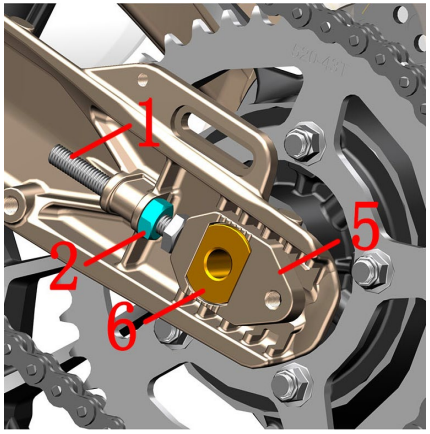

Fig.3 REAR WHELL COMPONENT		Rear wheel component 1	CHK ADJ	
NO.	PART NO.	PART NAME	QTY	CAUTION
1	1251100-105000	ZT310－Z chain adjuster bolt M10×70	2	
2	1251300-050000	ZT310－Z chain adjuster bolt M10(304 stainless steel)	2	
3		ZT310 R, chain adjuster	1	
4	1251300-067000	ZT250－R rear wheel hollow shaft nut	1	110N.m
5		ZT310 L, chain adjuster	1	
6	1091200-025000	KD150－U rear wheel hollow shaft	1	
7	1274200-002000	ZT310 rear wheel right sleeve φ20×φ28×φ38×18.5	1	
8	1244200-050000	ZT310－T cushion gum	5	
9	1094200-011000	ZT310－R sprocket	1	
10		Sprocket	1	
11	1251300-057093	Non－standard nut M10×1.5(dacromet)	5	45±3N.m
12	1094100-035000	ZT310 rear wheel left sleeve φ20×φ30×φ35×17.8	1	

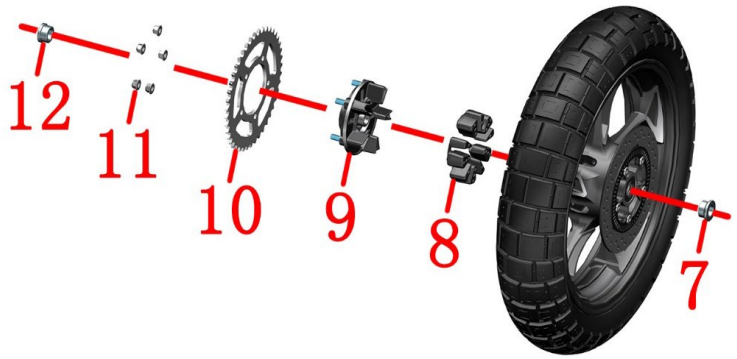

PROCEDURE:

●Rear wheel assembly

Disassemble rear wheel axle nut(4) with a 30# sleeve.

Using 17# open spanner to move chain adjuster nut(2) on both sides towards rear wheel axle until they reach chain adjusting bolt(1). Then rotate the bolts(1) and nuts(2) towards motorcycle front direction till the end.

Push rear wheel assembly towards motorcycle front direction and take off the chain from sprocket.

Hold the rear wheel assembly. Punch rear wheel axle(6) with rubber hammer. Take off right chain adjuster(3), right axle sleeve(7), rear tire and rim assembly, left axle sleeve(12), left chain adjuster(5). Tie firmly the rear disc brake clamp and avoid it to be lifed higher than disc brake oil cup. Disassemble the rear wheel axle at last.

●Sprocket bracket assembly

Put down the rear wheel assemble horizontally. Take off nut(11) with 14# sleeve. Take off sprocket(10); sprocket bracket(9). Pull out the sprocket gum cushion(8) from the rim.

CAUTION:

●Use suitable tool to support the motorcycle. Avoid accidents caused by falling motorcycle. Single person manipulation is prohibited.All the standard parts need to reach standard torque while reassembling.

●Using iron hammer to punch rear wheel axle, disc brake clamp assembly is prohibitd.

●While disassembling the rear wheel assemble, avoid the rear disc brake clamp to be lifted higher than the disc brake oil cup. If not, air will get into the tubes and cause softness or failure on braking system. As disc brake tubes request extreamly high vaccum degree. Make sure manipulator has maintenance ability before disassembling the disc brake assembly.

●Check the chain regularly. Increase the frequency of adjustment of the chain according to the driving conditions. Keep the tightness of chain to be in a suitable range. Too loose chain have possibility to separate from sprocket or damage the engine. Too tight chain can be worn out quickly.

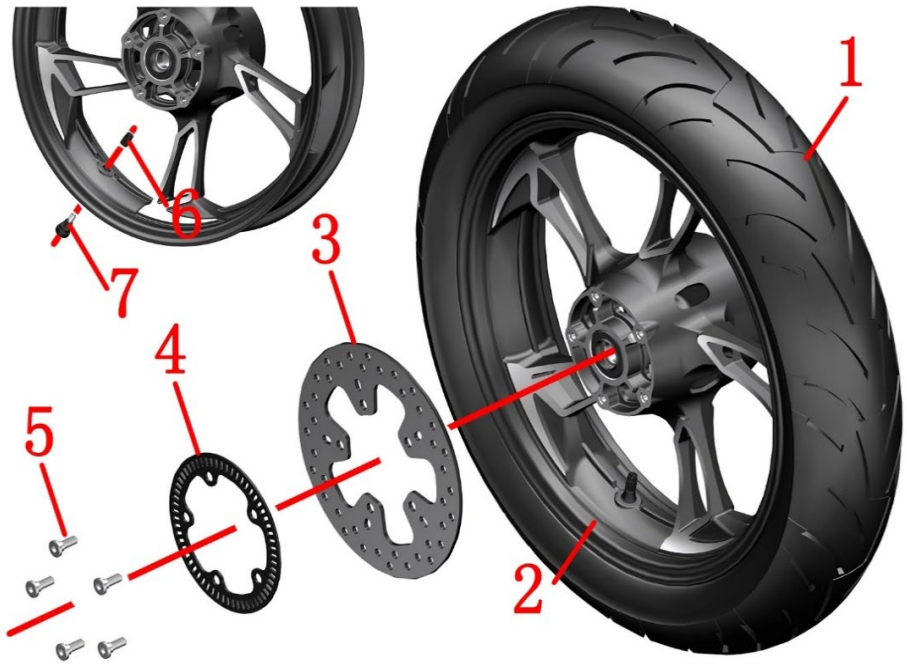

Fig.4 REAR WHELL COMPONENT		Rear wheel component 2	CHK ADJ	
NO.	PART NO.	PART NAME	QTY	CAUTION
1	1230100-446000	130/70－17 (CMNK01) environmental protection vacuum tire	1	
2	1091200-023000	KD150－U bright black rear rim (3.5×17)	1	
3	1100100-600000	KD150－U rear brake disc (230 × 4.5 / KD)	1	
4	1274200-058000	ABS induction ring (60 teeth)	1	
5	1251100-117093	Non－standard inner hex bolt M8×25(color zinc)	5	22～24N.m
6	1230200-006000	HJ100－D tire valve cap	1	
7	1230100-047000	Environmental vacuum tyre valve spile(TR－412)	1	

PROCEDURE:

●Disc brake plate, ABS gear ring

Using 6# inner hexagon socket remove bolts(5),remove ABS gear ring(4) and disc brake plate(3)。

●Tire and rim assembly

Disassemble tire valve cap(6). Deflate the tire with tools. Then disassemble the rear tire(1) with professional tire changing machine. Disassemble the tire valve(7) with suitable tool.

●Maintenance

Tire: Check regularly the tire on cracks and air pressure.If the tire is ware to the marker, change the tire with same specification. See details in user manual. Ingradiant of tire include semi hot melt rubber. Area with too high temperature is not suitable. If temparature of outdoor is too low, storing the motorcycle in warm place or indoor is suggested in order to avoid frost crack. Normal temperaturestandard 250kPa.

Rim: Check if the rim has deformation or crack. Support the rim horizontally and check if it can rotate smoothly. Specification of oil seal on rear rim is φ47×φ28×7. Bearing type: 6204-2RS.

Disc brake plate: Thickness can not be less than 4mm. If not, change it.

CAUTION:

●Be careful while disassembling the tire and rim in case of damages on the components.

●After changing the tire, check air proof performace and dynamic balance.

●Disqualified tire repair liquid might corrode the rim and cause safety risk.

●Not enough tire pressure can cause abnormal wear and tare. Too high pressure in summer might have possibility of tire bursting.

●It needs running-in for about 300km after changing new rear disc brake plate. During this period, leave enough braking distance while riging.

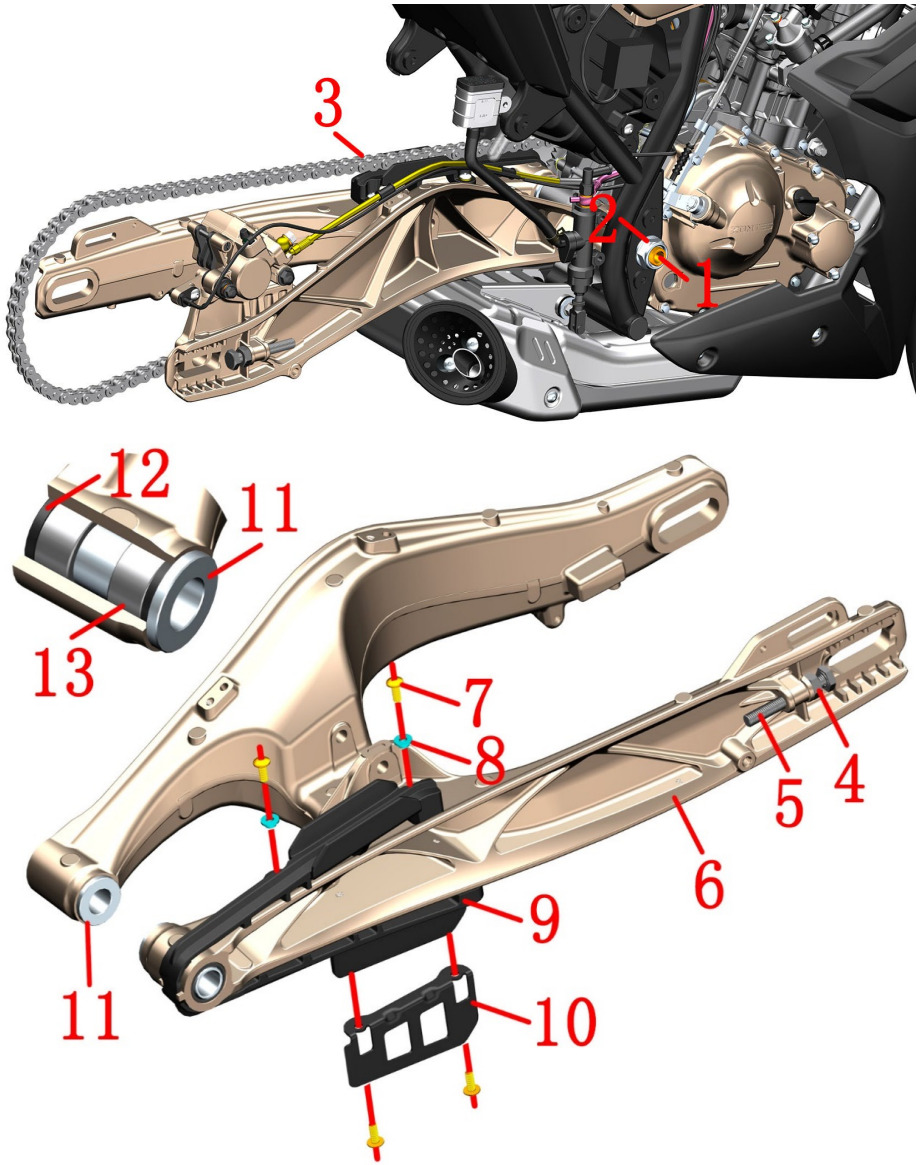

Fig.5 REAR WHELL COMPONENT		Rear fork component	CHK ADJ	
NO.	PART NO.	PART NAME	QTY	CAUTION
1	1252200-068000	KD150－U rear fork shaft	1	
2	1251300-067000	ZT250－R rear wheel shaft nut	1	110±5N.m
3		Link chain (KMC520HD)	1	
4	1251300-050000	ZT310-Z chain adjuster nut M10(304 stainless steel)	2	
5	1251100-105000	ZT310-Z chain adjuster bolt M10×70 (304 stainless steel)	2	
6		ZT125 aluminum alloy rear fork assembly	1	
7	1251100-102000	Non－standard bolt M6×16(304 stainless steel)	3	
8	1274100-057095	Flanging bushing φ6.2×φ8.5×3.5＋φ14×1.5	2	
9	1244200-053000	KD150－U rear fork anti－wear block	1	
10	1271200-062000	KD150－U rear fork wear block fixing bracket	1	
11	1271200-088000	KD150－U rear fork bushing	2	
12	1244200-079000	ZT310 single rocker arm Φ25×Φ32×4 oil seal	4	after-sales
13	1250602-035000	HK2516 needle roller bearing	4	

PROCEDURE:

●Rear fork assembly

Person 1 fastensthe head of the rear fork shaft(1)，person 2 remove the nut(2) with a 30# sleeve.

Person 1 holds the rear fork assembly and the other person removes the rear fork shaft (1) with suitable tool and then remove the rear fork assembly.

●Rear fork rear-resistant block

Remove the bolts(7),flanging bushing(8) with a 4# inner hexagon socket, then turn off the rear fork assembly,using 4# inner hexagon socket remove 2pcs bolts(7),take off the bracket(10),and then remove the wear-resistent block(9).

Remove the chain adjuster bolt(5) and nut(4)with the 17# open end wrench.

Put the rear fork bushing (11) inward and remove it.

Oil seal(12) and needle bearing(13) are used for interference compression.

Please ensure that you have the ability to disassemble and disassemble.

CAUTION:

●Be sure to fix up the motorcycle in the process of disassembly.

●Do not use a hammer to hit the rear fork shaft thread.

●The rear disc brake caliper must not be higher than the disc brake oil cup, otherwise the brake will become soft or faildue to air entering the pipeline. Because the brake line requires extremely high vacuum, it is necessary to ensure sufficientcapacity for repair and disassembly.

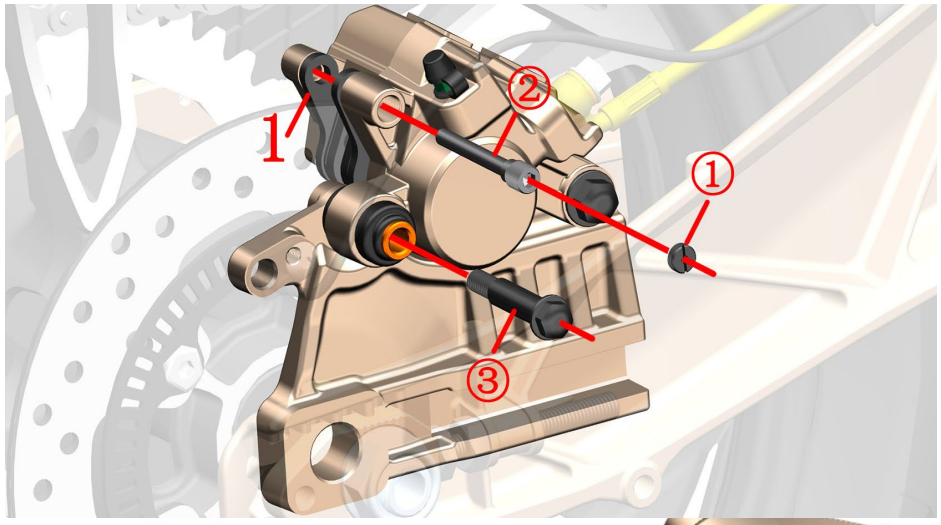

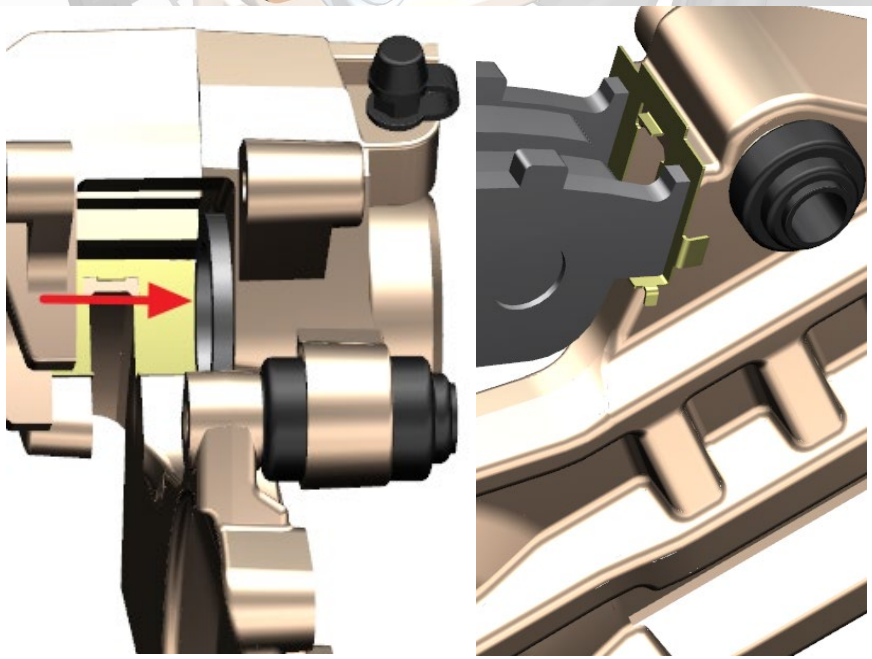

Fig.6 REAR WHELL COMPONENT		Replace the rear brake pads	CHK ADJ	
NO.	PART NO.	PART NAME	QTY	CAUTION
1	1100100-092000	ZT250－S rear disk brake piece (HS10)	1	after-sales

PROCEDURE:

●Disassemble disc brake arrester

Using strait screwdriver to disassemble nut①.

Disassemble pin axle② with a 5# inner hexagon socket.

Disassemble rolling axle③ with socket sleeve.

Take off rear disc brake arrester(1).

●Change rear disc brake arrester

Put the piston of clamp towards the direction of arrow to the end. See photo left below. To reduce resistance, you can disassemble the cross bolt on rear disc brake main pump oil cup. Take off the top cover and sealing gasket. Remember to rebound the pister afterwards.

The new arrester must fit tightly the slot. See photo right below.

Tighten the pin axle② with inner hexagon socket tool.

Tighten rolling axle③ with socket sleeve.

Tighten nut① with strait screwdriver.

Step on braking pedal several times until braking force is recovered.

CAUTION:

●Check regularly the arrester and disc brake plate status.

●To change arresters in qualified mainenance spot are suggested.

●After changing the arrester, adjust the height of braking pedal according to "Foot pedal, gear shift rod assembly" if necessary.

●It needs running-in for about 300km after changing new arresters. During this period, leave enough braking distance while riging.

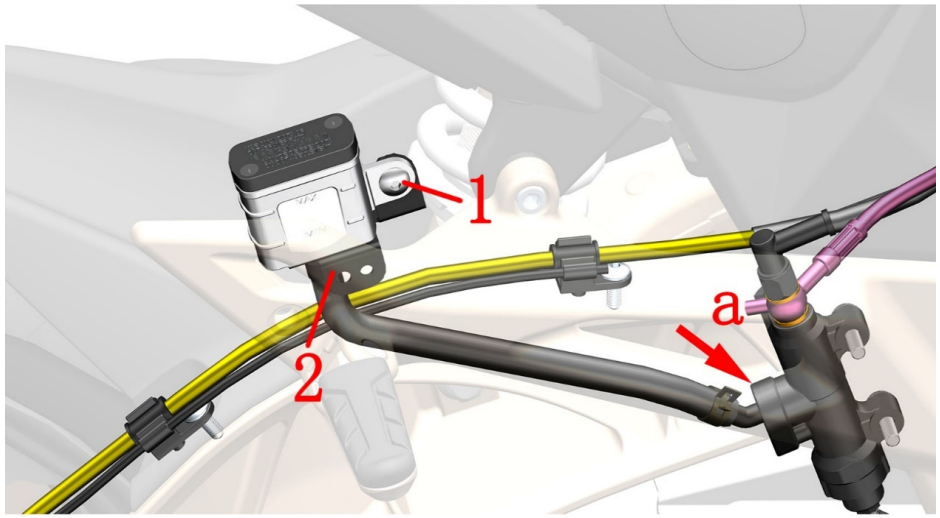

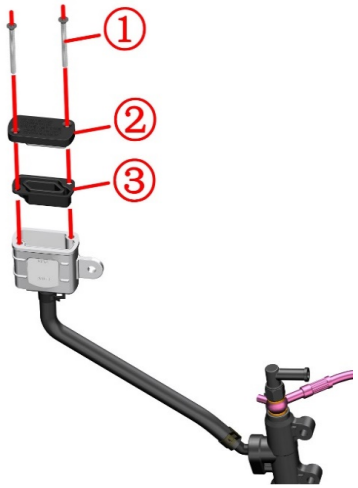

Fig.7 REAR WHELL COMPONENT		Rear brake main pump adds brake fluid	CHK ADJ	
NO.	PART NO.	PART NAME	QTY	CAUTION
1	1251100-101000	Non－standard bolt M6×12 (304 stainless steel)	1	
2	1271200-087000	KD150－U rear disc brake oil cup bracket	1	

PROCEDURE:

●Add disc brake liquid

Cover the right pedal bracket with a waterproof plastic bag to prevent the brake fluid from dripping onto the paint and causing corrosion.

Using 4# inner hexagon socket remove the bolt⑴,then pull out the oil cup.

The oil cup should always remain above the oil tube interface "a", parallel to the ground. Avoid braking failure caused by air getting into the oil circulation.

Disassemble bolt① with cross screwdriver.

Take off oil cup cap②, sealing gasket③.

Keep the top of oil cup parallel to the ground. Add DOT4 braking liquid. Ensure the liquid level is between "UPPER" and "LOWER".

While reassemble, pay attention install sealing gasket③ in correct position and direction.

Step gently on the pedal constantly. Do not ride the motorcycle until the braking force is recovered.

CAUTION:

●Support the motorcycle well on flat ground before checking.

●Check regularly if the braking liquid surface is between "UPPER" and "LOWER".

●If liquid surface is below "LOWER", check the arrester status and confirm if the braking system is leaking.

●If the braking liquid is accidently swallowed, contact intoxication center or hospital immediately. If it gets into the eye, wash it away with clean water then see the doctor.

●Keep the braking liquid far away from children and pets.

●Flush the oil cup directly with high pressure water is prohibited.

●Mixing water, dust, impurity and liquid of silicic acid or petrol series into the braking liquid is prohibited. Otherwise, the braking system would be damaged.

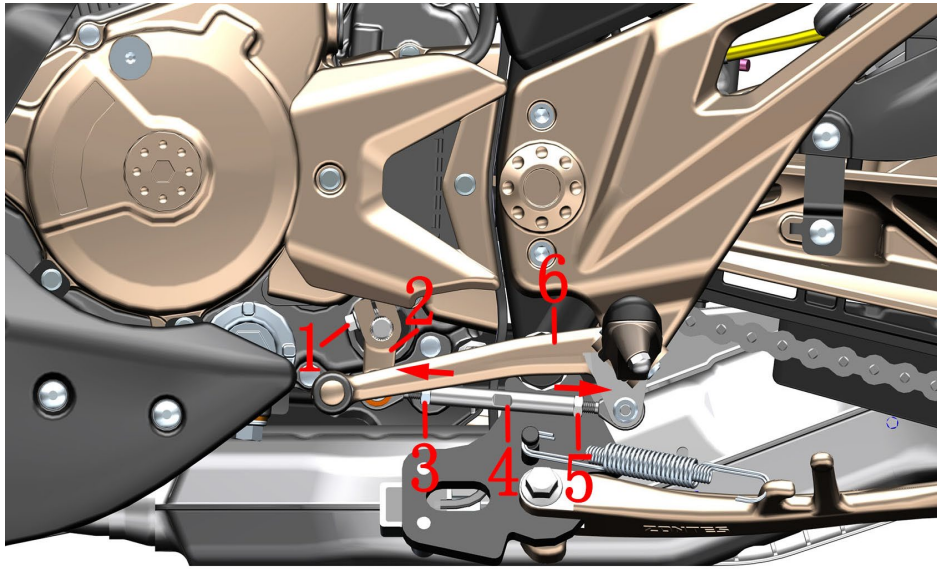

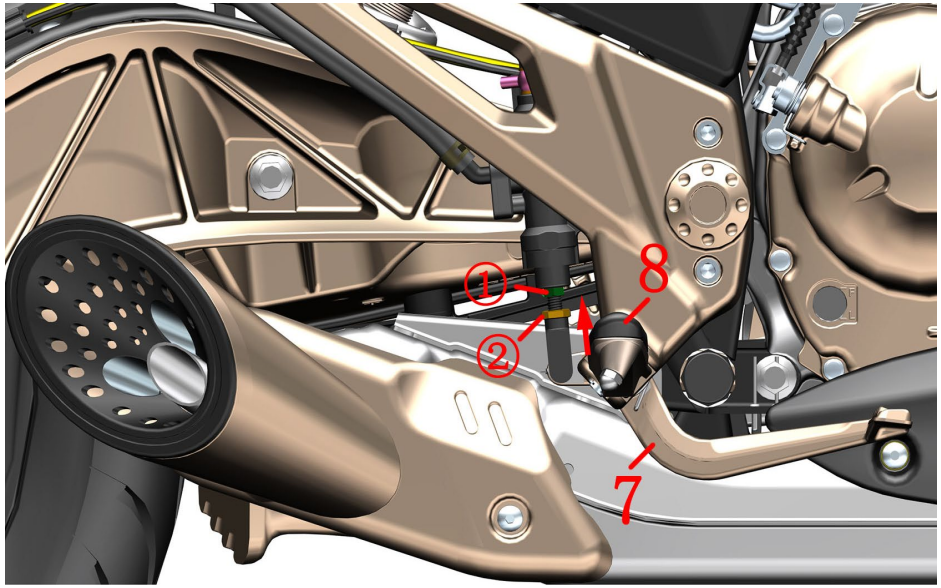

Fig.1 FOOT PEDAL COMPONENT		Adjust the hight of foot pedal	CHK ADJ	
NO.	PART NO.	PART NAME	QTY	CAUTION
1	1251100-061093	M6×22 Hex flang bolt thread level 8.8 (color zinc)	1	
2		ZT250－S Gear swift rod spline of Rocker arm	1	
3	1250301-020093	GB6170M6 (environmental color)	1	
4	1271200-086000	KD150－U shift lever adjusting screw φ10×72	1	
5	1250301-018093	GB6170 M6－LH (army green)	1	
6		ZT310－T rocker arm, gear shift rod	1	
7		KD150－U brake pedal	1	
8		ZT310－X R, front pedal component	1	

PROCEDURE:

●Adjust the height of gear shift rod

Follow the direction of arrow and loosen Nut(3), Nut(5) with a 10# open spanner.Using 8# open spanner to adjust the gear shift rod adjustment bolt until the height becomes suitable. Then tighten the nuts. If the above-mentioned method can not adjust the gear shift rod to a satisfying position, take off bolt(1) and adjust gear shift rod spline of rocker arm(2) with a straight screwdriver by shoving a little bit the groove in the middle while dragging it out. Reassemble after the height is suitable. Pay attention to the aligning of the groove in the middle.

●Adjust the height of brake pedal

Follow the direction of arrow and loosen Nut② with a 14# open spanner. Spin the adjustment rod bolt① with a 10# open spannerand adjust the brake pedal(7)position and foot(8) on top of the height to comfort position. Fix the adjustment rod bolt① and tighten Nut②.

CAUTION:

●Ensure the motorcycle is well supported during manipulation. Avoid falling accident.

●The height of gear shift rod should be ajusted to a suitable range. Otherwise the riding experience would be influenced.

●The height of brake pedal should be ajusted to a suitable range. Otherwise the durance of braking shoe and plate would be influenced. In severe case, ineffective braking is possible.

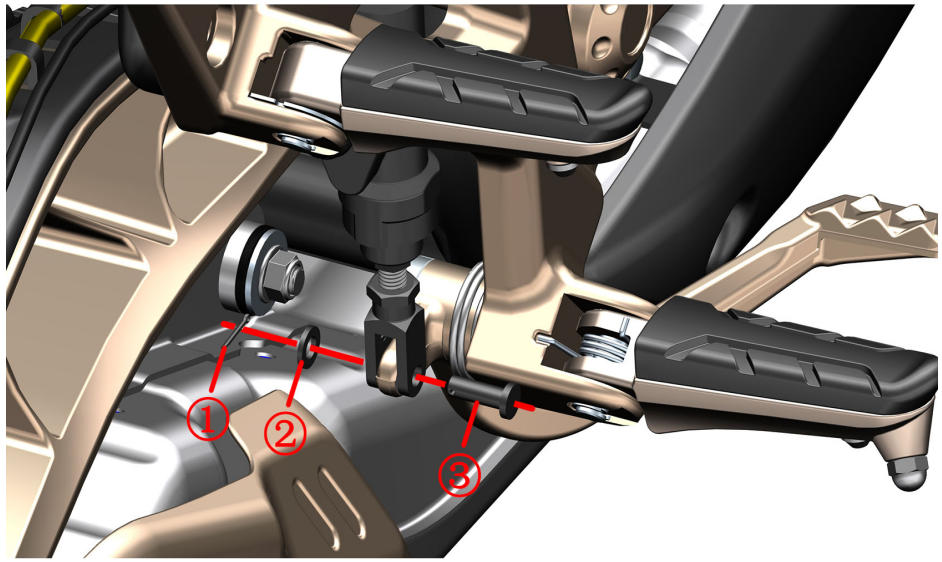

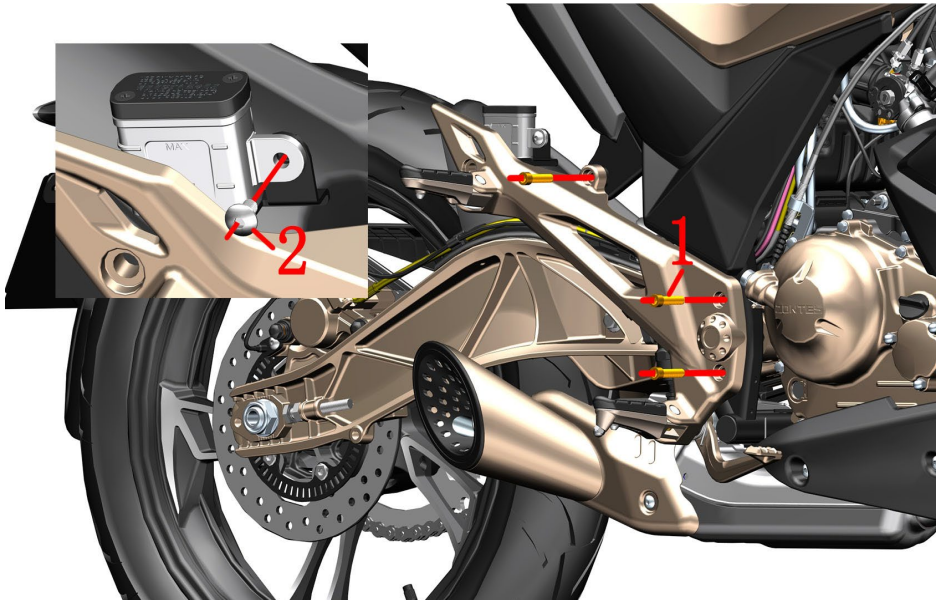

Fig.2 FOOT PEDAL COMPONENT		Right footrest component 1	CHK ADJ	
NO.	PART NO.	PART NAME	QTY	CAUTION
1	1250205-023000	GB70.1 inner hexagonal M8X35 (color zinc)	3	
2	1251100-101000	Non－standard bolt M6×12 (304 stainless steel)	1	

PROCEDURE:

●Right Foot pedal component

Using a plier to disassemble the pin①. Then take off the washer② and pin③.

Using 6# inner hexagon socket remove 3pcs bolts(1).

Using 4# inner hexagon socket remove bolt(2),then take away the oil cup.

CAUTION:

●While overturning the foot pedal holder, keep the components nearby well protected in case they are scratched.

●Mind the disc brake oil tube while overturning the holder.

●Support the motorcycle properly while disassembling in case it falls down.

●Rear disc brake oil cup can not be lower than oil tube interface of main pump.

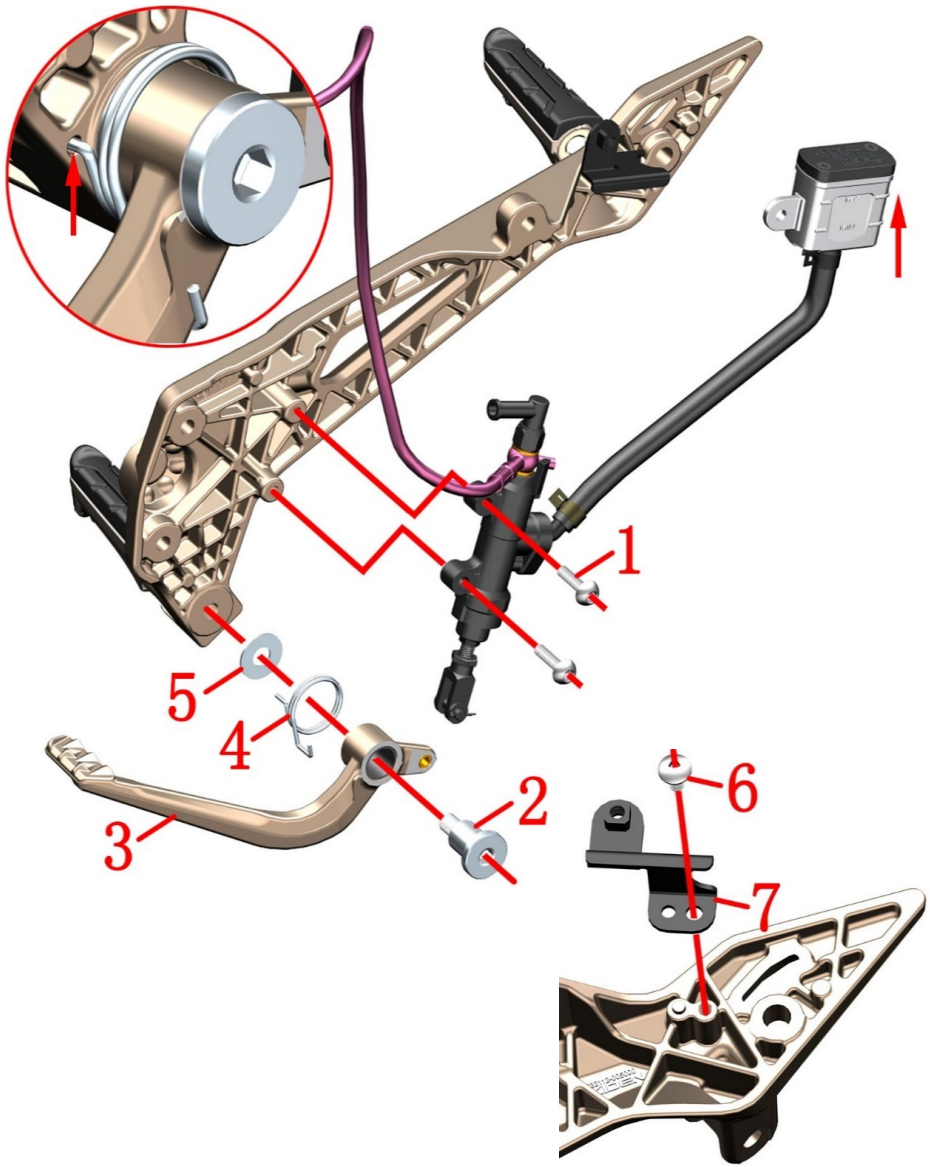

Fig.3 FOOT PEDAL COMPONENT		Right footrest component 2	CHK ADJ	
NO.	PART NO.	PART NAME	QTY	CAUTION
1	1251100-121093	Non－standard bolt M8×25 (color zinc)	2	
2	1251100-131000	Non－standard shaft position bolt M10×1.5×36(zine)	1	
3		KD150－U brake pedal	1	
4	1260100-119093	ZT310－R Brake footrest torsion spring (color zinc)	1	
5	1251500-060095	Non－standard flat padφ10.5×φ26×1(zine)	1	
6	1251100-101000	Non－standard bolt M6×12 (304 stainless steel)	1	
7	1271200-087000	KD150－U rear disc brake oil cup bracket	1	

PROCEDURE:

●Rear disc brake pump assembly

Using 6# inner hexagon socket remove bolts(1).Rear disc brake oil cup can never be lower than oil tube interface① of main pump②.

●Brake pedal assembly

Using 8# inner hexagon socket remove the bolt(2) ; pull out the brake pedal(3); take off the brake pedal spring(4) and the washer(5).

●Rear disc brake oil cup holder

Using 4# inner hexagon socket romove the bolt(6),take off the oil cup bracket(7).

CAUTION:

●Applying lubrification on inner surface of brake pedal bush can reduce resistance on brake pedal.

●While reassembling,remember to insert the spring into spacing hole of foot pedal holder.

●Support the motorcycle properly while disassembling in case it falls down.

●Place properly the disc brake oil cup and main pump. Avoid the air on top of oil cup getting into the tubes of disc brake.

●The bolt(2) should be checked regularly for looseness and thread fastening adhesive is recommended.

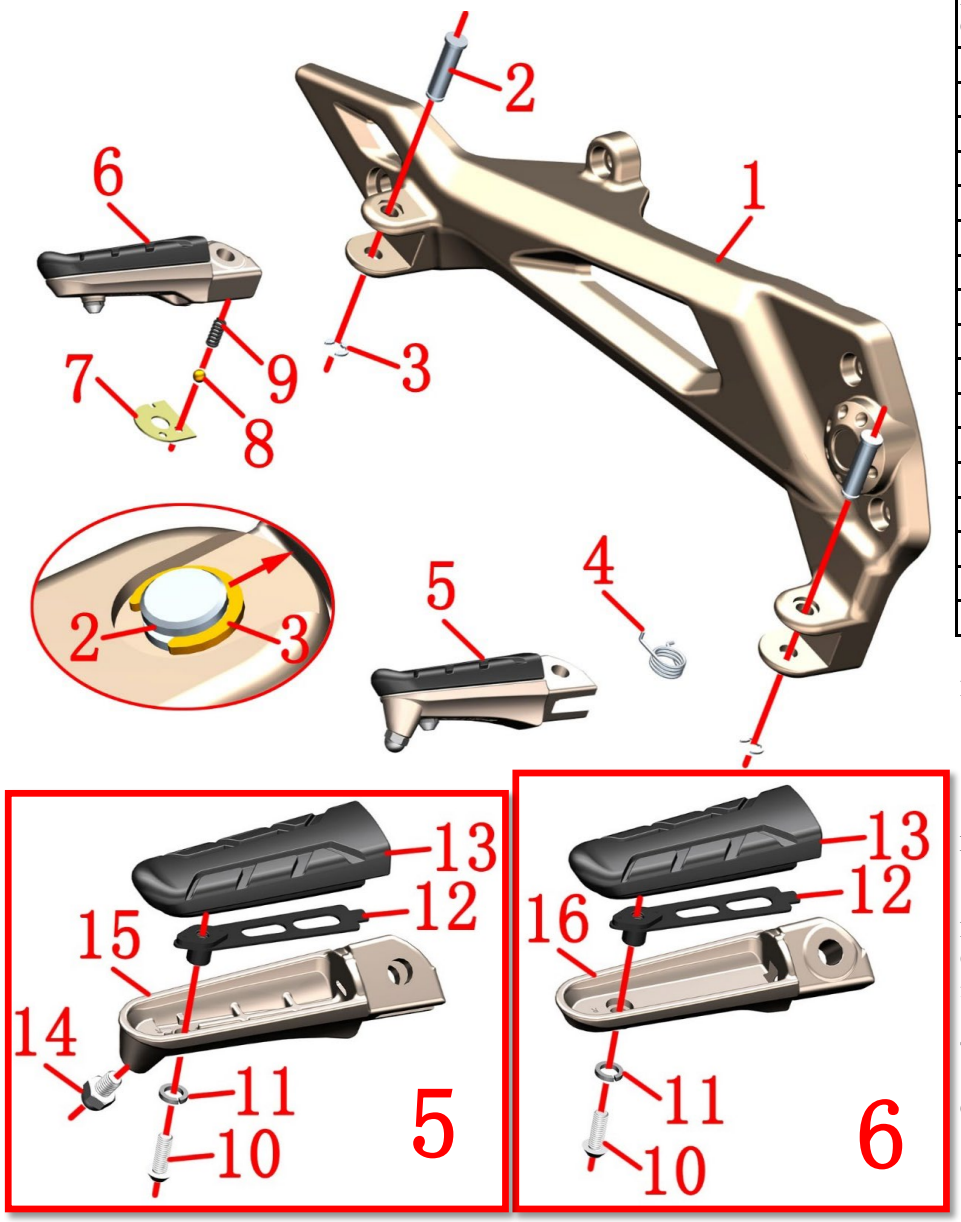

Fig.4 FOOT PEDAL COMPONENT		Right footrest component 3	CHK ADJ	
NO.	PART NO.	PART NAME	QTY	CAUTION
1		KD150－U right pedal support	1	
2	1274100-012000	ZT250－S Pedal pin	2	
3	1264100-006000	ZT250－S Pedal circlip	2	
4	1264100-004000	ZT250－S front right foot pedal torsional spring	1	
5		ZT310－X R, front pedal component	1	
6		ZT310－X R, rear pedal component	1	
7	1270300-272000	KD250－F rear pedal locating plate	1	
8	1274100-010000	ZT250－S rear pedal steel ball	1	
9	1264100-005000	ZT250－S foot pedal steel ball spring	1	
10	1250205-038000	GB70.2M5×12(stainless steel)	2	After sales
11	1250501-010000	GB93φ6 spring pad	2	
12	1274200-051000	ZT310－X footrest gum cover fixed plate	2	
13	1244200-024000	ZT310－X footrest gum cover	2	
14	1251100-167000	Non－standard ball head boltsM6×8	1	
15		ZT310－X R, front pedal	1	
16		ZT310－X R, rear pedal	1	

PROCEDURE:

●R, front pedal

Disassemble circlip(3). Take off foot pedal pin axle(2). Then disassemble R, front pedal(5), foot pedal spring(4).

●R, rear pedal

Disassemble circlip(3). Take off foot pedal pin axle(2). Then pull out R, rear pedal(6).Take down positioning plate(7), steel ball(8), spring(9).

●After sales parts for pedal component

Hold tightly the R front pedal(15). Disassemble bolt(14) with a 10# sleeve. Disassemble bolt(10) with 3# inner hexagon socket.Take off spring washer (11). Take off rubber(13), positioning plate(12). Only front pedal needs bolt (14). Foot pedal rubber(13), positioning plate(12), bolt(10),spring washer (11) are in common use.Each part use 1 piece for after sales purpose.

Hold tightly the R rear pedal(14),Disassemble bolt(10) with 3# inner hexagon socket.Take off spring washer (11). Take off rubber(13), positioning plate(12).

CAUTION:

●Ensure correct installation when exchanging after sales components of the pedal.

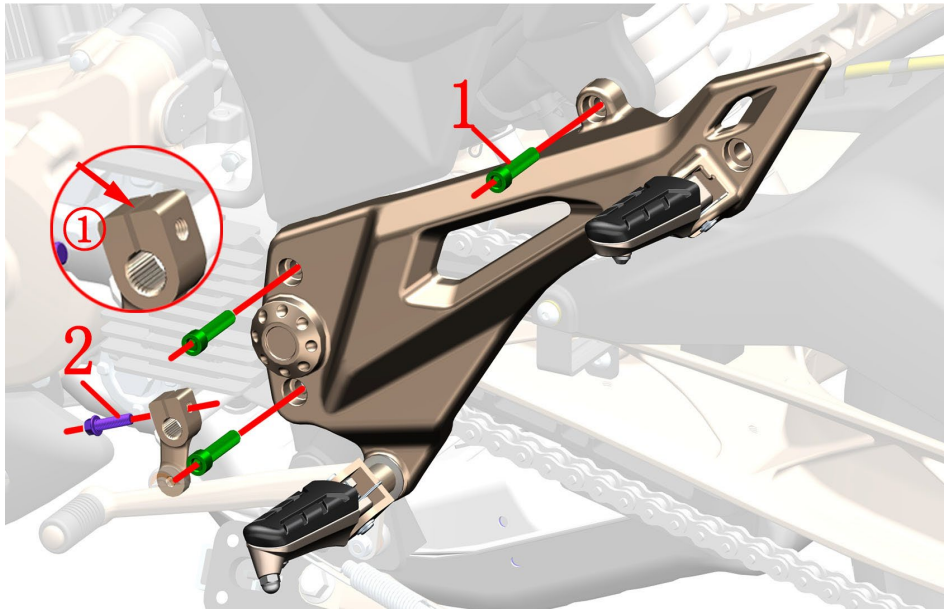

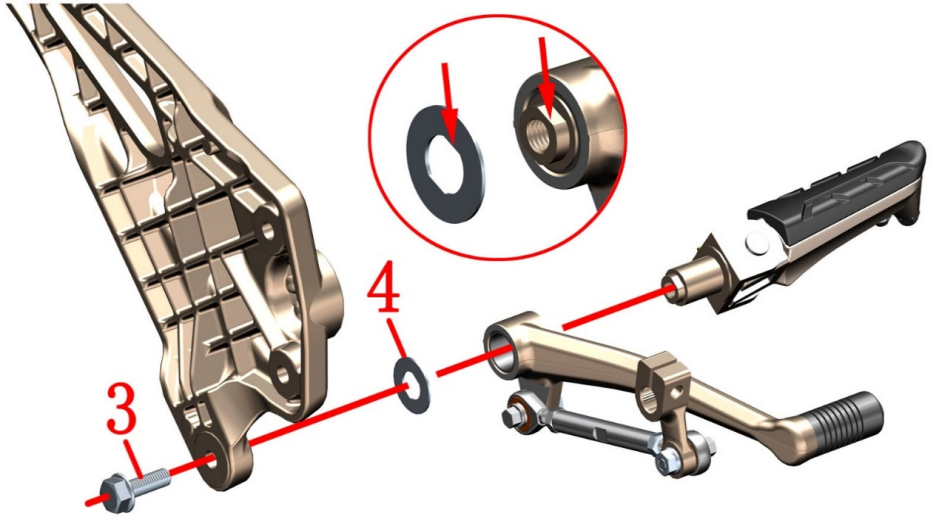

Fig.5 FOOT PEDAL COMPONENT		Left footrest component 1	CHK ADJ	
NO.	PART NO.	PART NAME	QTY	CAUTION
1	1250205-023000	GB70.1 inner hexagonal M8X35(color zinc)	3	
2	1251100-061093	M6×22 Hex flang bolt thread level 8.8 (color zinc)	1	
3	1251100-123093	Non－standard bolt M8×25 (color zinc)	1	
4	1251500-048000	ZT250－S Pedal support gasket	1	

PROCEDURE:

●L, foot pedal holder assembly

Remove the rectifier guard first.

Using 8# ring spanner remove the bolt(2).

Insert strait screwdriver into slot① and open a little bit the spline rockerarm while pulling it out from gear shift axle of engine.

Using 6# inner hexagon socket remove 3pcs bolts(1).

Take off left foot pedal holder assembly.

●Gear shift rod assembly

Using a 14# sleeve remove bolt(3). Separate left foot pedal component and gear shift rod assembly from left foot pedalholder assembly. Take off foot pedal holder washer(4).

CAUTION:

●Support the motorcycle properly while disassembling in case it falls down.

●Pay attention to the alignment of foot pedal holder washer and the lug boss while reassembling.

●Applying lubrification to the surface of cylinder of foot pedal holder can reduce resistance on gear shift rod.

●The bolt(3) should be checked regularly for looseness and thread fastening adhesive is recommended.

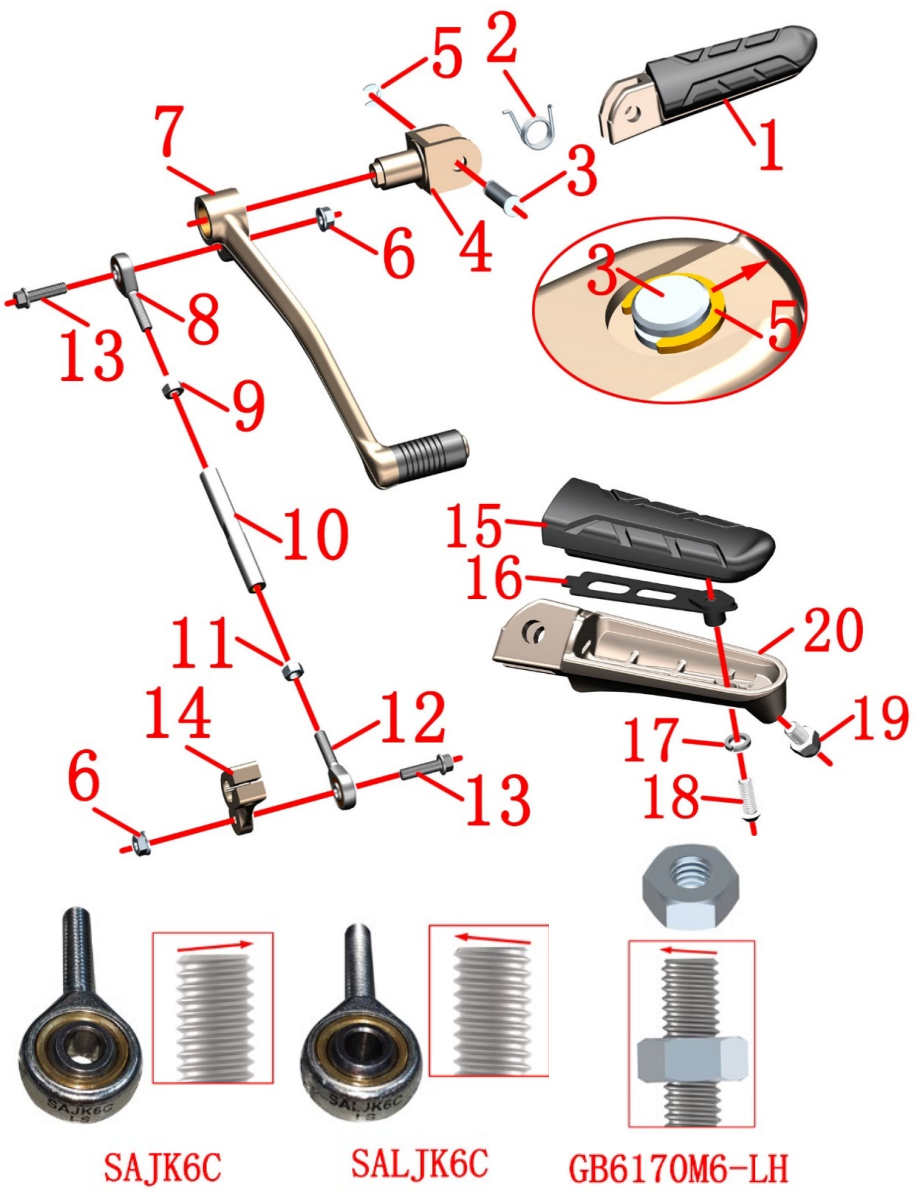

Fig.6 FOOT PEDAL COMPONENT		Left footrest component 2	CHK ADJ	
NO.	PART NO.	PART NAME	QTY	CAUTION
1		ZT310－X L, front pedal component	1	
2	1264100-003000	ZT250－S front left foot pedal torsional spring	1	
3	1274100-012000	ZT250－S Pedal pin	1	
4	1274100-035000	ZT250－S Foot pedestal	1	
5	1264100-006000	ZT250－S Pedal circlip	1	
6	1250303-010093	GB6177.1M6(color zinc)	2	
7	1274200-160000	ZT310－T shift lever step rocker	1	
8	1274100-043000	Miniature rod end ball bearing SALJK6C	1	
9	1250301-018093	GB6170 M6－LH (army green)	1	
10	1274200-003000	ZT310－R adjusting screw of gear shift lever φ10×130	1	
11	1250301-020093	GB6170M6 (environmental color)	1	
12	1274100-042000	Miniature rod end ball bearing SAJK6C	1	
13	1251100-061093	M6×22 Hex flang bolt thread level 8.8 (color zinc)	2	
14	1274100-039000	ZT250－S shift lever spline rocker arm	1	
15	1244200-024000	ZT310－X footrest gum cover	1	After sales
16	1274200-051000	ZT310－X footrest gum cover fixed plate	1	
17	1250205-038000	GB70.2M5×12(stainless steel)	1	
18	1250501-010000	GB93φ6 spring pad	1	
19	1251100-167000	Non－standard ball head boltsM6×8	1	
20		ZT310－X L, front pedal	1	

PROCEDURE:

●L, Foot pedal component

Disassemble circlip(5). Take off foot pedal pin axle(3). Take off L, foot pedal(1), foot pedal spring(2) from foot pedal holder(4).

●Gear shift rod assembly

Disassemble on both sides nut(6) wit a 10# sleeve and bolt(13) with a 8# open spanner.Disassemble gear shift rod rocker arm(7), spline rocker arm(14). Loosen nut(9)&(11) with a 10# open spanner. Take off adjusting rod(10). Separate bearing (8)&(12).

●Foot pedal with rubber for after sales service

Hold the L, front pedal tightly. Disassemble bolt(19) with a10# ring spanner.Then take off bolt(18) with 3# inner hexagon socket.Take off spring washer (17),Take off rubber(15), positioning plate(16).

CAUTION:

●Applying lubrification to the surface of cylinder of foot pedal holder can reduce resistance on gear shiftrod.

●Pay attention to distinguishing the nuts at both ends of the knuckle bearing and the adjustment screw.

●Ensure correct installation when exchanging after sales components of the pedal.

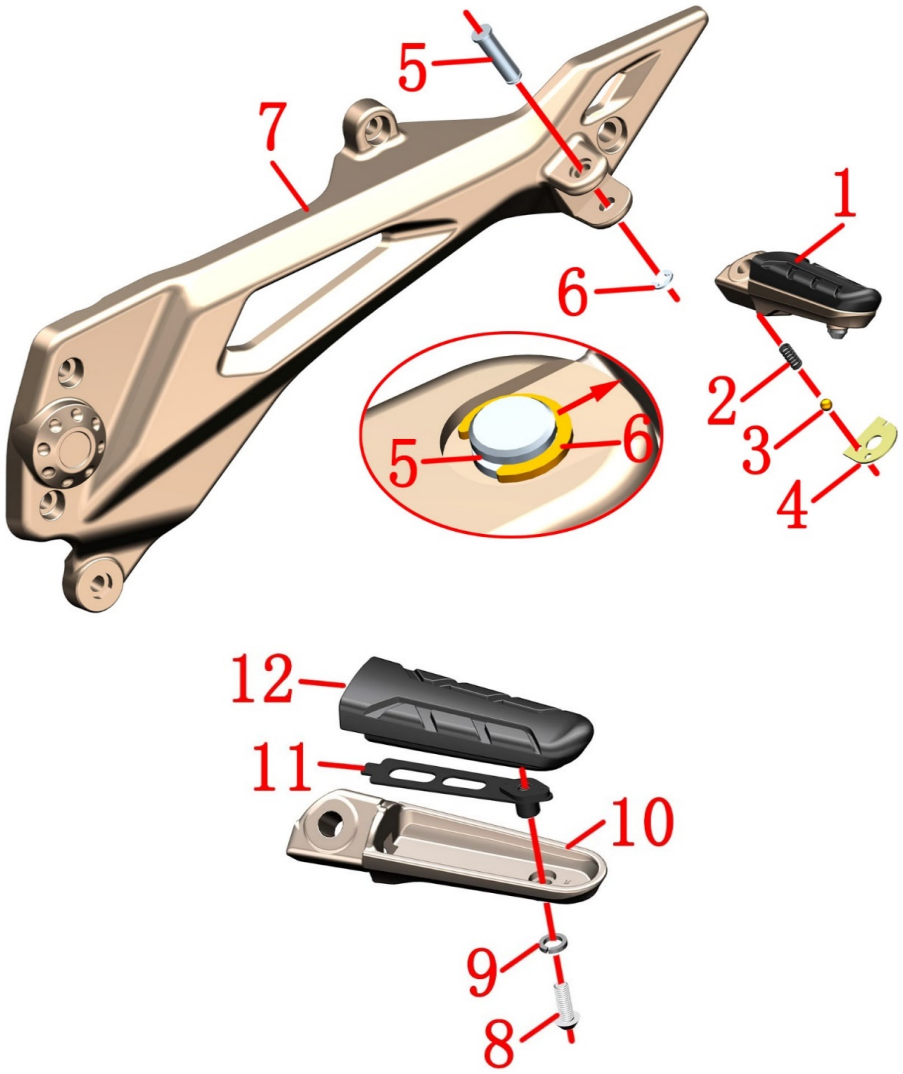

Fig.7 FOOT PEDAL COMPONENT		Left footrest component 3	CHK ADJ	
NO.	PART NO.	PART NAME	QTY	CAUTION
1		ZT310－X L, rear foot pedal component	1	
2	1264100-005000	ZT250－S foot pedal steel ball spring	1	
3	1274100-010000	ZT250－S rear pedal steel ball	1	
4	1270300-272000	KD250－F rear pedal locating plate	1	
5	1274100-012000	ZT250－S Pedal pin	1	
6	1264100-006000	ZT250－S Pedal circlip	1	
7		KD150－U left pedal support	1	
8	1250205-038000	GB70.2M5×12(stainless steel)	1	After sales
9	1250501-010000	GB93φ6 spring pad	1	
10	1032142-040000	ZT310－X rear left pedal	1	
11	1274200-051000	ZT310－X footrest gum cover fixed plate	1	
12	1244200-024000	ZT310－X footrest gum cover	1	

PROCEDURE:

●L, rear foot pedal

Disassmble circlip(6) with a tool. Take off foot pedal pin axle(5). Then pull out L, rear foot pedal(1). Take off positioning plate(4), steel ball(3), spring(2).

●After sales parts of foor pedal with rubber

Hold the L, rear foot pedal(10) tightly, using 3# inner hexagon socket to disassemble bolt(8), Take off spring washer (9). Take off rubber(12) and positioning plate(11).

CAUTION:

●Ensure correct installation when exchanging after sales components of the pedal.

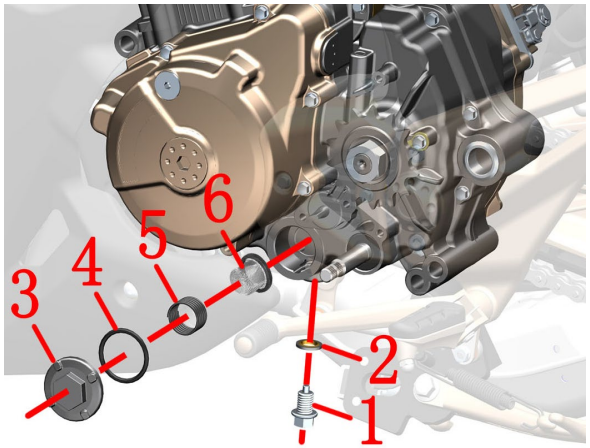

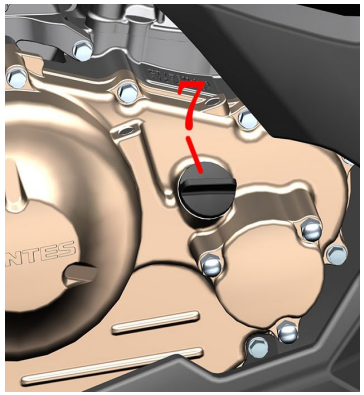

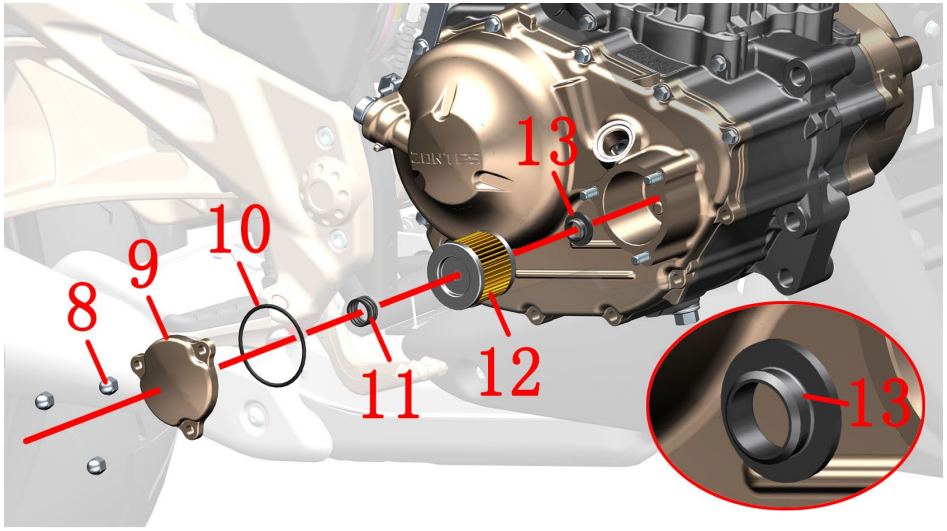

Fig.1 COOLING SYSTEM COMPONENT		Change the oil and the oil filter	CHK ADJ	
NO.	PART NO.	PART NAME	QTY	CAUTION
1	1251100-066093	M12×1.5×15 oil drain bolt (color zinc)		30±3N.m
2	1244100-033000	Combined sealing gasket12×φ20×2		
3	1050868-010000	ZT1P58MJ coarse filter cover (iron gray)		32±1.5N.m
4	1051468-003000	34.5×3.5 acrylate adhesive O－ring		
5	1050868-003000	Φ25.8×34.2×1.8 coarse filter spring		
6	1050868-004000	Outer diameter φ22×21 hat－shaped coarse filter		
7	1251300-054000	M20×1.5 fuel filler cap		
8	1251300-056093	M6 cap nut(12 grade / environmental color)		10±1.5N.m
9		ZT158MJ oil filter cover	1	
10	1051456-004000	Φ49×φ2.5 nitrile rubber O－ring	1	after-sales
11	1050868-002000	Φ18.5×13×1.6 fine filter spring	1	
12	4131200-002000	ZT152QMI fine filter seal assembly(carton packaging)	1	【1】
13	1051466-016000	ZT152QMI oil fine filter seal	1	after-sales

CAUTION:

●Wasted engine oil should be collected and hand over to qualified facilities for further treatment. Do not pour the oil anywhere and avoid pollution of environment and water source.

●Disassembling the cooling system while the motorcycle is hot is prohibited. Wait until the engine and muffler cool down thoroughly for the manipulation.

●Engine oil filter can not be turned over when assembling.Ensure every component is well assembled.

PROCEDURE:

●Change engine oil filter

Park the motorcycle with side stand on flat ground.Place holder to collect wasted engine oil under the oil drain bolt.

Using 14# sleeve+ratchet wrench remove the oil drain bolt(1) and the combined sealing gasket(2),Unscrew the oil filler nut (7) on the right side to speed up the oil outflow.

Using 24# sleeve+ratchet wrench remove the coarse filter cover component,take off the spring(5),and the strainer(6).Take off the O-ring(4) from the coarse filter cover(3).

Use a clean non-woven cloth to wipe off the oil stains on the surface of the coarse filter and the joint surface. After correctly assembling all the parts above except the oiler nut, proceed to the next step.

●Change engine oil filter

Place holder to collect wasted engine oil under right crankcase cover.Using 10# sleeve remove nuts(8)， take off the oil filter cover component、fine spring(11)、oil filter(12) and filter seal(13)。Take off the O-ring(10) from the oil filter cover(9).Wipe off the grease with a clean non-woven cloth and replace with a new fine filter sealing assembly (including fine filter, O-ring and sealing ring), and restore all parts.

●Change engine oil

Add from opening on right crankcase of engine 1.0L(1.05L if oil filter is changed) new engine oil of SAE 5W-40/10W-50/10W-40 with API SN degree or higher.Then reassemble the fuel filler cap(7). Start the engine and test it under different rotation speed for 2 minuts. Check if the engine oil leaks.Run the engine at idling speed for 5 minuts than shut down the engine for 3 minuts. Check the engine oil level gauge.

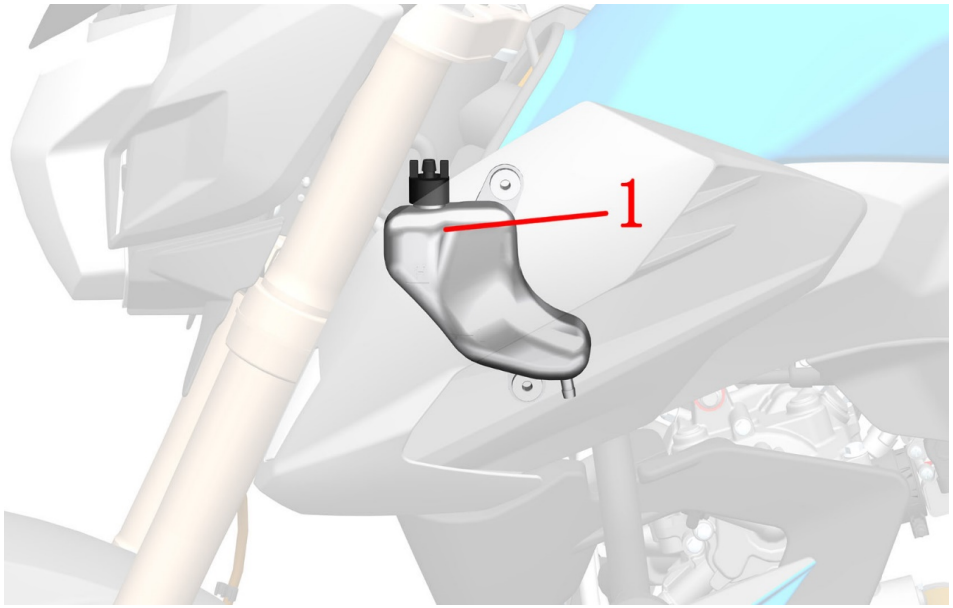

Fig.2 COOLING SYSTEM COMPONENT		Add coolant	CHK ADJ	
NO.	PART NO.	PART NAME	QTY	CAUTION
1	1221200-050000	KD150－U auxiliary water tank	1	

PROCEDURE:

●Add coolant

When the engine is completely cooled, the vehicle can be straightened to accurately check the liquid level. If it is lower than the "L" line, the coolant should be replenished in time. If the auxiliary tank has no or only a small amount of coolant, check the cooling system first, and remove the leak before adding it.

Park the vehicle with the side brackets; turn the direction to the right and turn to the bottom.

Open the lid of the auxiliary water tank(1) and add a small amount of coolant each time with a funnel. It is appropriate to reach the position between "H" line and "L"line when the liquid level of the coolant is used to support the vehicle.

CAUTION:

●Check regularly the cooling liquid surface. It should never be lower than "L" line.

●Change cooling liquid every two years is suggested.

●Swallowing or inhaling cooling liquid would harm human body. Clean thoroughly the hands, face or explosing skin every time after adding cooling liquid. If cooling liquid is swalled by accident, please contact toxication center or hosipital. If it's inhaled, please move to open air. If it's spilt to the eye, clean it with big quantity of clean water and see doctor in time. Be sure the cooling liquid is far away from children or pets.

●Engine cooling liquid must be suitable for aluminum radiator. The basic should be glycol. Cooling liquid should be mixture of distilled water and concentrated cooling liquid under certain proportion. Be sure to choose cooling liquid which is suitable for your local extreamly low temperature. The freezing point should be lower than the local lowest temperature. Distilled water is the only kind of water acceptable. Other kind of water might cause corrosion to engine cooling system or other more severe problems.

●Total volume of cooling liquid is 830ml.

●Cooling liquid might damage the coating of motorcycle. Be careful while adding. If it is spilt in small quantity, please clean it immediately with soft cloth.

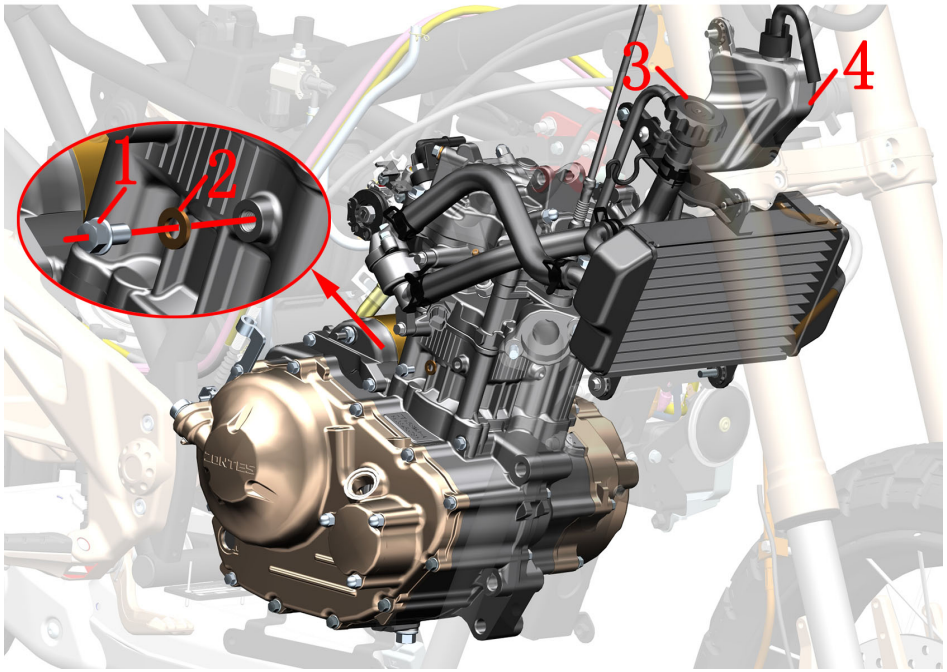

Fig.3 COOLING SYSTEM COMPONENT		Change coolant	CHK ADJ	
NO.	PART NO.	PART NAME	QTY	CAUTION
1	1251100-067093	M6×10 top pin bolt (color zinc)	1	12±1.5N.m
2	1251513-001019	6.3×12×1.6 copper gasket	1	
3	1221200-069000	KD150－U water tank water inlet	1	
4	1221200-050000	KD150－U auxiliary water tank	1	

PROCEDURE:

●Drain the cooling liquid

Cover the right crankcase cover and cylinder block of the engine with a waterproof cloth to prevent the coolant from dripping onto the cover and the engine. Wear waterproof gloves with both hands and use an 8# sleeve to remove the drain bolt (1) and remove the copper pad (2); place the container at the drain port and then open the cover of the water tank filling port (3) The coolant begins to drain into the container, and the body is turned to the right tilt to drain the coolant. Wipe the remaining coolant on the surface of all parts with a clean cloth, and then replace the drain bolts and copper pads. It is recommended to replace them with new bolts and copper pads.

●Add cooling liquid

Slowly pour new coolant into the filling port of the water tank filling port (3), and do not cover the cover after filling. Start the bike at idle for a few minutes and observe the liquid level. If it drops, continue to add. Repeat the operation until it is full before closing the cover. Unscrew the cover of the auxiliary water tank (4), add an appropriate amount of coolant to it to keep the liquid level between "H" and "L".

CAUTION:

●Motorcycle should be well supported.

●Manipulation should start after the engine is completely cooled down.

●Cooling liquid is toxic. Avoid strictly eye or skin contact. For more details, see "Attention" of previous page.

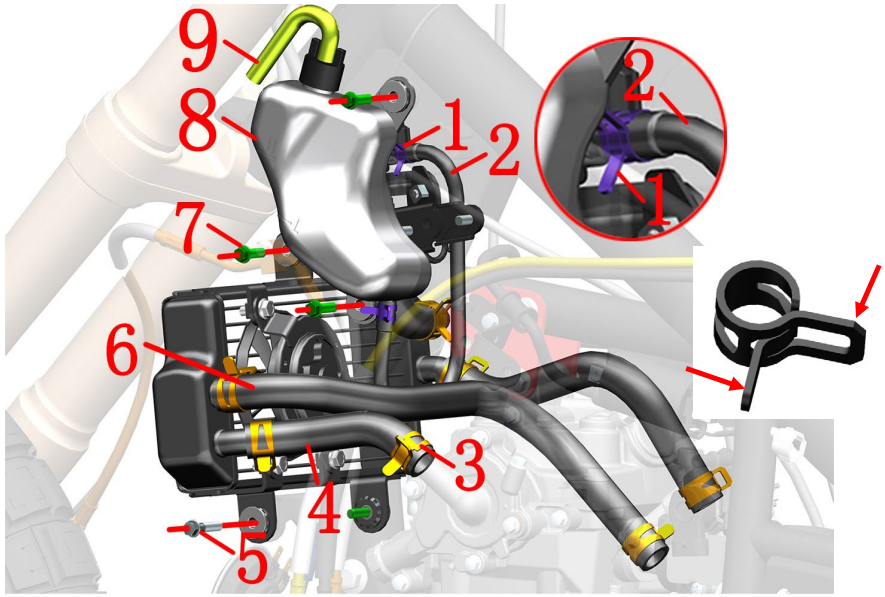

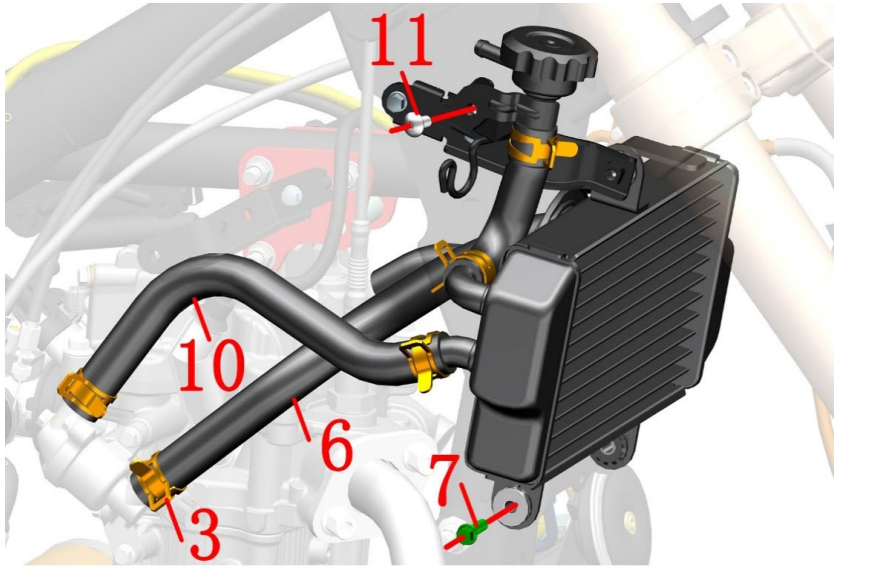

Fig.4 COOLING SYSTEM COMPONENT		Water tank component 1	CHK ADJ	
NO.	PART NO.	PART NAME	QTY	CAUTION
1	1274200-088000	ZT310 water pipe clamp(φ10.5)	2	
2	1241200-051000	KD150-U auxiliary water tank connection water pipe	1	
3	1274200-089000	ZT310 water pipe clamp(φ22)	6	
4	1241200-054000	KD150－U engine water inlet pipe	1	
5	1251112-002093	M6×30 Hexagon flange bolts (color zinc)	1	
6	1241200-055000	KD150－U small circulation water pipe	1	
7	1251100-061093	M6×22 Hex flang bolt thread level 8.8 (color zinc)	4	
8	1221200-050000	KD150－U auxiliary water tank	1	
9	1244200-069000	ZT310－V auxiliary water tank leakage pipe	1	
10	1241200-053000	KD150－U engine outlet pipe	1	
11	1251100-101000	Non－standard bolt M6×12 (304 stainless steel)	1	

PROCEDURE:

●Auxiliary water tank

After wearing waterproof gloves, use the hoop clamp to clamp the hoop under the auxiliary water pipe (1) and move it toward the inside of the water pipe at the same time, unplug the water pipe (2), and remove the hoop (1). Remove the hoop (1) at the water inlet of the right water tank, and then remove the water pipe (2).

Use an 8# sleeve to remove the 2 bolts (7) that fix the auxiliary water tank (8) and then remove the auxiliary water pipe from the bike, and pull out the leaking pipe (9) from the auxiliary water tank.

●Water pipe

Remove the hoop (3) at both ends of the water inlet pipe (4) at the bottom left of the water tank and pull it out; remove the two hoop (3).

Move the bolts of the hoop (3) on the small circulating water pipe (6) on the upper left side of the water tank out of the raised part of the water pipe joint, pull out the water pipe (6) from the water tank and remove the hoop.

●Water tank component

Refer to the previous steps to remove the small circulating water pipe (6) and the outlet pipe (10), as well as the 4 pieces of hoops (3).

Use an 8# sleeve to remove the bolts (5) and (7) on the left side of the water tank. Remove the bolt (11) at the water inlet and the bolt (7) at the bottom.

Locate and unplug the water tank fan and then remove the water tank assembly.

CAUTION:

●Motorcycle should be well supported.Manipulation should start after the engine is completely cooled down.

●Manipulation should start after the engine is completely cooled down.

●Cooling liquid is toxic. Avoid strictly eye or skin contact. For more details, see "CAUTION" of previous page.

●Do not disassemble the hoop with too strong force. If not, it will cause permanent deformation and loseelasticity, which will lead to leakage of cooling liquid.

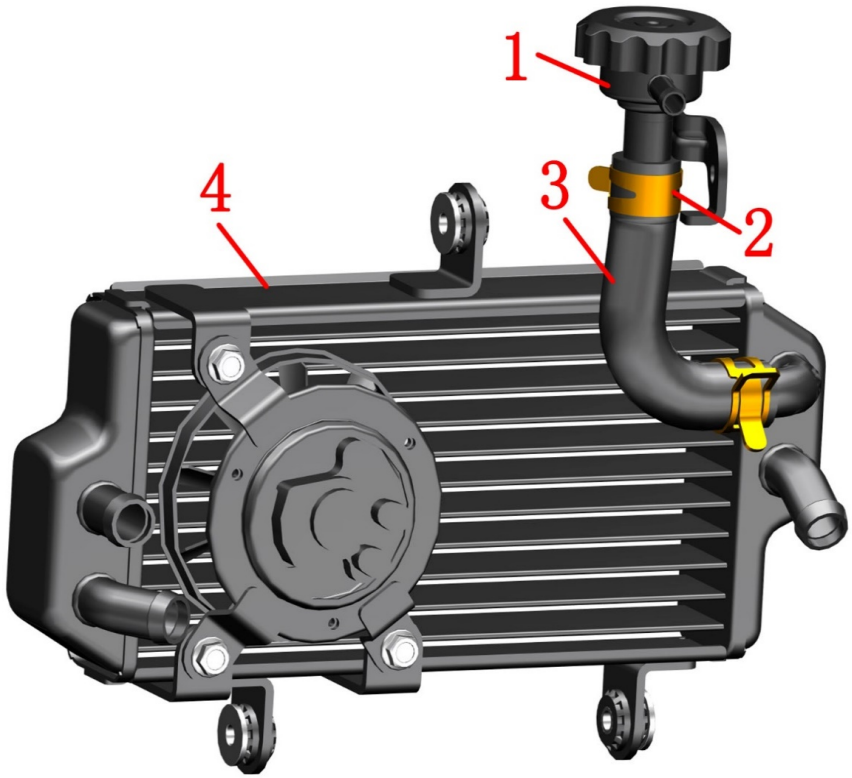

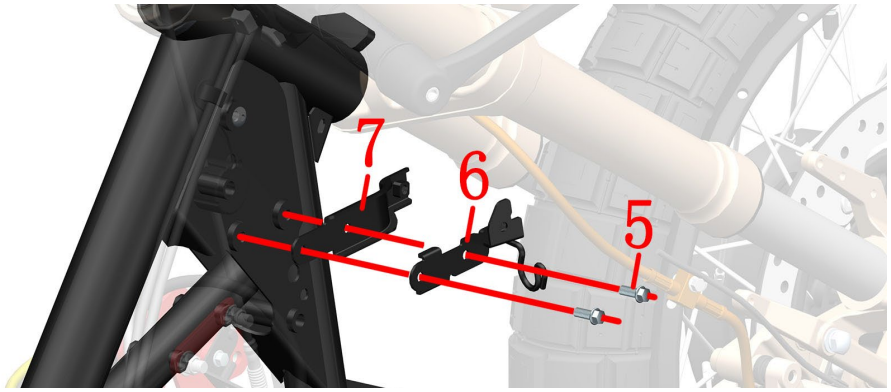

Fig.5 COOLING SYSTEM COMPONENT		Water tank component 2	CHK ADJ	
NO.	PART NO.	PART NAME	QTY	CAUTION
1	1221200-069000	KD150－U water tank water inlet	1	
2	1274200-089000	ZT310 water pipe clamp(φ22)	2	
3	1241200-052000	Water tank water inlet connection water pipe	1	
4	1271200-066000	KD150－U water tank	1	
5	1251100-061093	M6×22 Hex flang bolt thread level 8.8 (color zinc)	2	
6	1271200-081000	KD150－U water tank cover bracket	1	
7	4021200-024000	KD150－U radiator bracket	1	

PROCEDURE:

●Water tank component

Remove pipe clam(2),then remove water tank water inlet(1).Pull out the water pipe(3).

●Water tank bracket

Using 8# sleeve remove 2pcs bolts(5),take off the water tank cover bracket(6) and the radiator bracket(7).

CAUTION:

●Cooling liquid is toxic. Avoid strictly eye or skin contact. For more details, see "Attention" of previous page.

●Do not disassemble the hoop with too strong force. If not, it will cause permanent deformation and loseelasticity, which will lead to leakage of cooling liquid.

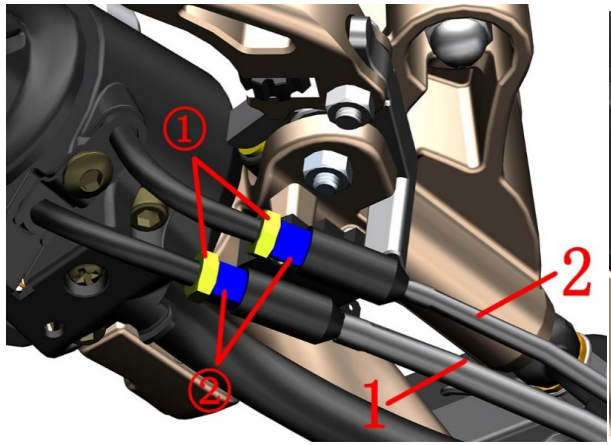

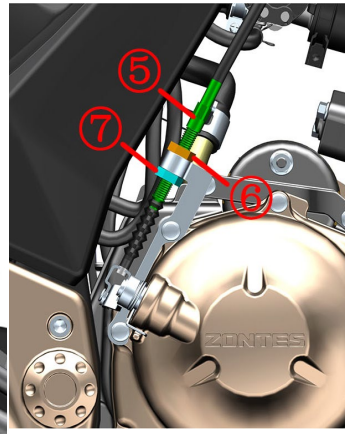

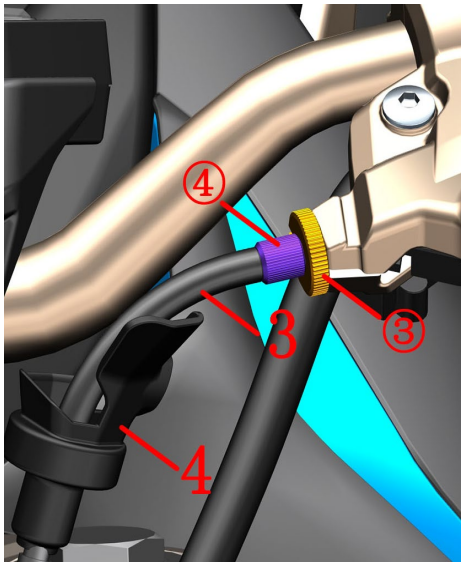

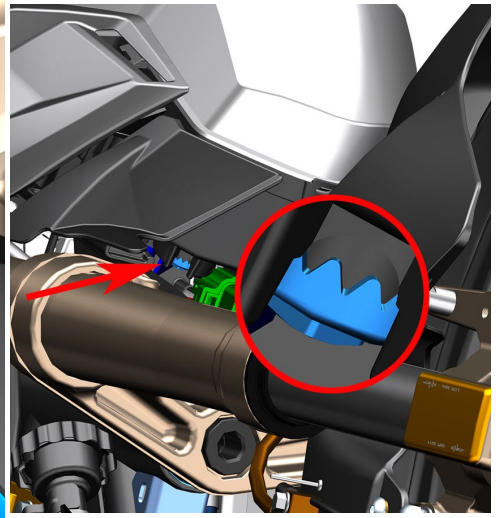

Fig.1 FRONT FORK COMPONENT		Throttle/clutch cable clearance adjustment, light height adjustment	CHK ADJ	
NO.	PART NO.	PART NAME	QTY	CAUTION
1	1151200-041000	KD150－Z2 throttle return cable	1	
2	1151200-046000	KD150－Z2 throttle accelerating cable	1	
3	1154100-011000	ZT250 － R clutch cable	1	
4	1244200-046000	ZT310－V clutch cable sheath	1	

PROCEDURE:

●Throttle cable

Use an open-end wrench to loosen the lock nut ① on the throttle accelerating cable (2) or the return cable(1), and turn the adjustment screw ② to adjust the clearance to 2 to 4 mm. After the adjustment, lock the nut ① again.

●Clutch cable

Fine adjustment:

Lift the protective rubber sleeve (4) on the clutch rocker arm to the elbow of the clutch cable (3), loosen the nut ③ with pliers, rotate the adjustment screw ④, finally lock the nut ③, and then reset the dust jacket. After adjusting, pay attention to the nut ③, the adjustment screw ④ and the groove of the rocker seat should be staggered to prevent the cable from coming out.

Big adjustment:

If fine adjustment cannot be achieved, using 14# open spanner loosen the nuts⑥ and ⑦, rotate the adjustment screw ⑤, and finally tighten the nuts⑥ and ⑦.

●Light height adjustment

Insert a PH2 type Phillips screwdriver (diameter 6mm) into the dimming hole on the right rear side of the wire storage box from the small hole under the headlamp bracket, align the adjusting bolt, turn clockwise to increase, and counterclockwise to decrease the beam height.

CAUTION:

●The motorcycle support should be fixed during disassembly to prevent accidents caused by incline.

●Throttle line adjustment should be noted as follows:

After adjustment, ensure that the throttle can be reset automatically. It is forbidden to increase the idle speed of the engine due to adjustment of the cable.

The engine idle speed rise cannot occur in the direction of rotation.

Checking the engine idle speed should be performed under the condition of a heat engine and should be at 1400 to 1600 rpm.

●The clutch adjustment should be noted as follows:

Excessive free travel can cause wear and malfunction of the clutch and gearshift mechanism.

After adjustment, be sure to stagger the nut, adjusting screw, and slot on the rocker arm to a certain position to prevent the cable from coming out of the slot.

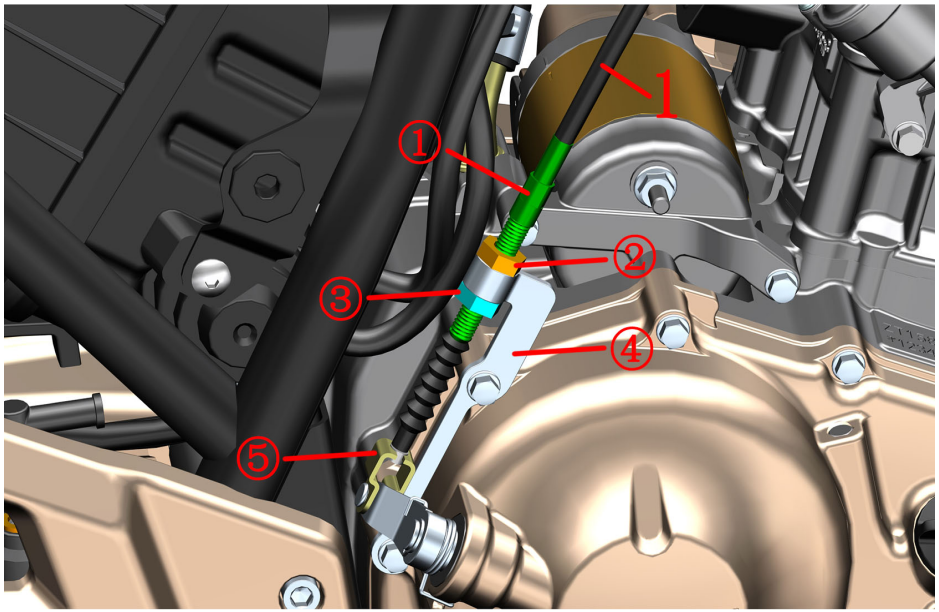

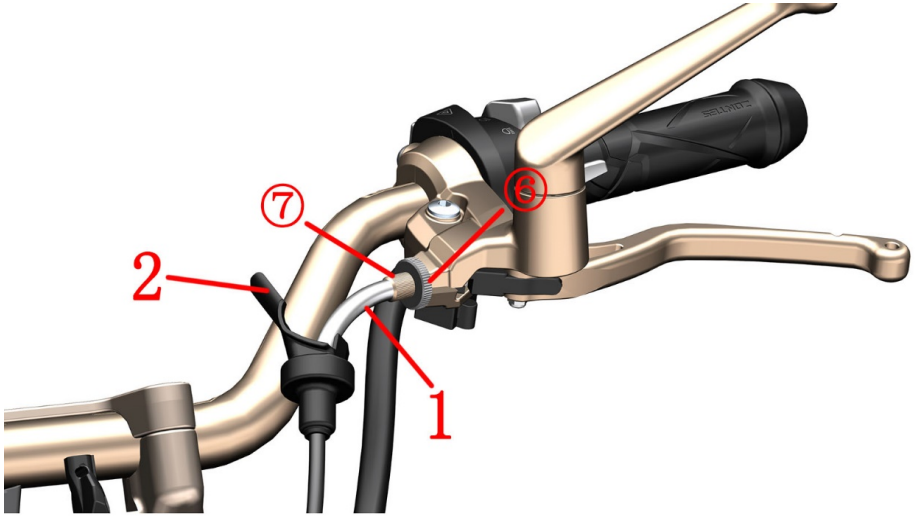

Fig.2 FRONT FORK COMPONENT		Replacement clutch cable	CHK ADJ	
NO.	PART NO.	PART NAME	QTY	CAUTION
1	1154100-011000	ZT250 － R clutch cable	1	
2	1244200-046000	ZT310－V clutch cable sheath	1	

PROCEDURE:

●Remove the cluch cable

Use an open-end wrench to loosen the nuts ② and ③; fix the adjusting screw ①, rotate the nut ② up to the top of the thread of the adjusting screw, and screw the nut ③ to the bottom to completely separate from the thread. Separate the clutch wire core connector from the bracket ⑤, close the nut ③ to the black sheath with one hand, and remove the adjustment screw ① from the bracket ④ with one hand.

First, the protective rubber sleeve (2) is retracted to the elbow and the nut ⑥ is loosened with the pliers; the nut ⑥ and the adjusting screw ⑦ are rotated to the same position as the groove on the rocker arm, and remove the cable from the rocker arm seat.

Remove the clutch cable.

Remove the protective sleeve (2) from the clutch cable(1).

●Install the clutch line

Put protective rubber sleeve (2) into clutch elbow.

After inserting the clutch line joint into the rocker arm, screw the nut ⑥ and the adjusting screw ⑦ to the groove on the rocker arm.

Assemble the clutch cable into place according to the original alignment.

Rotate the nut ② up to the top of the thread of the adjusting screw, and screw the nut ③ to the bottom to completely separate from the thread.

Take the nut ③ close to the black sheath with one hand and insert the adjustment screw ① into the bracket ④ with one hand.

Insert the clutch core connector into the hole of the bracket ⑤.

Initially position the nut ② first, adjust the free stroke adjustment in the clutch cable adjustment, and then lock the nut ③.

Finally, reset the protective rubber sleeve (2).

CAUTION:

●The motorcycle support should be fixed during disassembly to prevent accidents caused by incline.

●Before replacing the clutch line, it is necessary to disassemble the seat cushion, fuel tank, liner, side cover, etc.

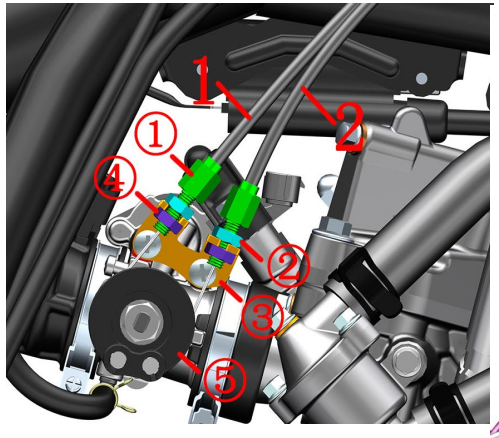

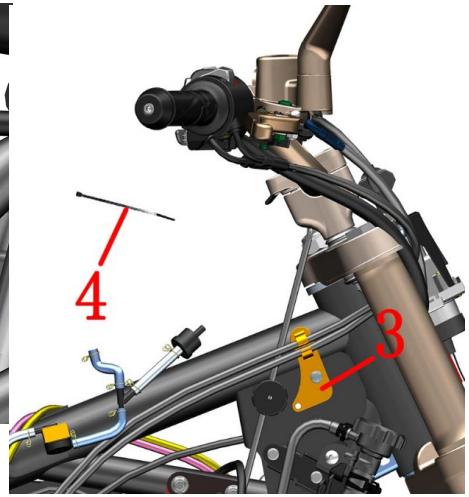

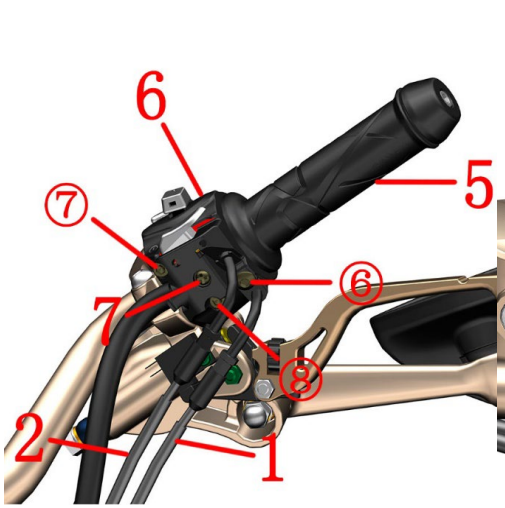

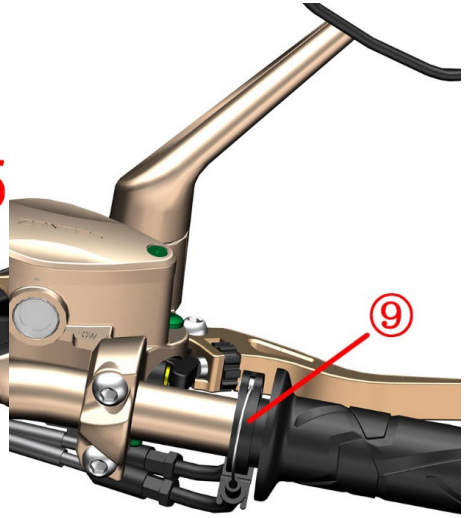

Fig.3 FRONT FORK COMPONENT		Replace the throttle cable	CHK ADJ	
NO.	PART NO.	PART NAME	QTY	CAUTION
1	1151200-041000	KD150－Z2 throttle return cable	1	
2	1151200-046000	KD150－Z2 throttle accelerating cable	1	
3	1221200-058000	KD150－U clamp	1	
4	1224100-051000	Grade 0 flame retardant tie (black 2.5×100)	1	
5	1244100-042000	ZT250－R right handle bar rubber sleeve	1	
6	1184200-185000	ZT310－V1 right handlebar switch	1	
7	1251100-219000	Cross ball screw M5×30	1	after-sales

PROCEDURE:

●Disassemble the throttle cable

Use an 10# open-end wrench to turn the nut ② of the throttle accelerating cable(1) or the oil return cable(2) upside down, turn the nut ④ downwards out of the adjusting pipe ①; rotate the turntable on the throttle valve clockwise, and turn the cylindrical joint of the fuel line from the turntable Remove; then move the adjustment tube upwards over the bracket ③ on the throttle valve and pull outwards to separate the core from the bracket. Similarly, remove the oil return line.

Use pliers to open the card of the line clamp (3) slightly, remove the throttle cable from the slot, and cut off the cable tie (4).

Hold the right hand switch (6) with your hand and using 5# inner hexagon socket remove the bolts ⑥ and ⑦ ,then remove the bolt⑧/(7) . Switch the upper and lower parts of the switch.Pay atten tion to the wiring when re-installing and can not press on any cables.

Remove the throttle cable from the right hand and remove the rubber sleeve (5) from the core turntable ⑨, and then remove it from the cable hole in the lower part of the switch.

●Install the throttle cable

First pass the throttle cable into the cable hole in the lower part of the switch. Fit the cylindrical connector of the throttle cable into the turntable ⑨ on the right hand gripper (5). Return the oil return line card to the limit slot provided on the fuel line. Use a 5#inner hexagon socket lock the bolt ⑥ to a torque of 8 to 10 Nm. The switch mounting hole is slightly twisted a few times for the rear bolt ⑦ and the bolt ⑧/(7) is locked after observing the positioning hole and the direction of the lower part of the switch (6). Finally, tighten the bolt ⑦ and tie the tie (4). Cut off the excess. Reset the sub switch and rocker assembly and note the symbol on the alignment switch. Install the throttle cable into the slot of the hub clamp (3). Use an open hand to turn the nut ② of the throttle refueling cable (1) or the return cable (2) up to the end, and turn the nut ④ downwards to the adjustment pipe ①. Put the oil return line into the bracket ③, and fit the connector into the turntable ⑤. Put the oil line into the bracket ③, then turn the turntable ⑤ to a certain angle, and then insert the connector. Refer to the method of adjusting the gap to adjust the throttle line clearance; after adjusting the left and right direction of rotation, there should be no change in idle speed and flexible reset. Lock nuts ② and ④.

CAUTION:

●The motorcycle support should be fixed during disassembly to prevent accidents caused by incline.

●Before replacing the clutch line, it is necessary to disassemble the seat cushion, fuel tank, liner, side cover, etc.

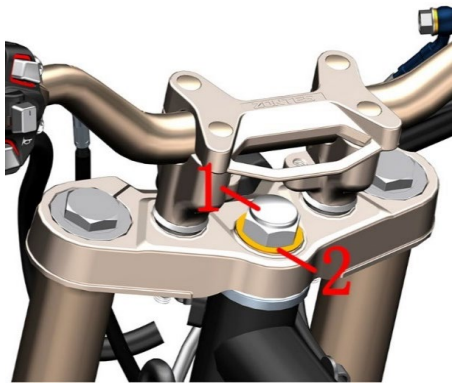

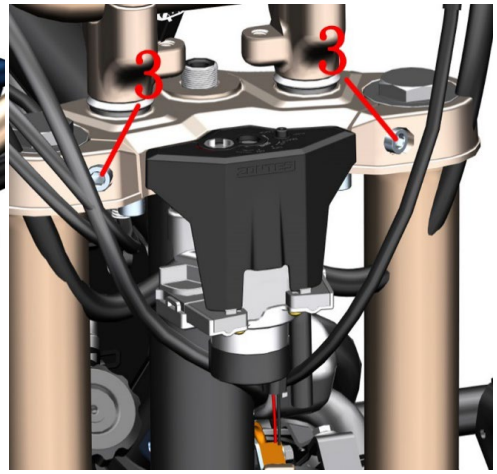

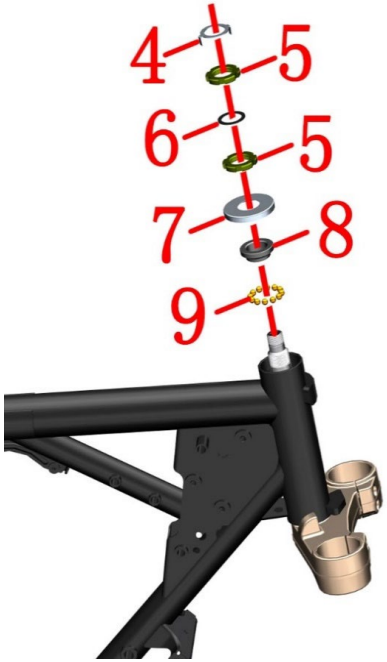





Fig.4 FRONT FORK COMPONENT		Steering adjustment	CHK ADJ	
NO.	PART NO.	PART NAME	QTY	CAUTION
1	1251300-045000	ZT250－S upper connection decoration nut(chroming)	1	100N·m
2	1251500-050000	ZT250－S upper connection gasket φ18.5×φ39×1	1	
3	1250205-023000	GB70.1 inner hexagonal M8X35 (environmental color)	2	22～24N.m
4	1134100-007000	ZT250－S Adjusting nut locking washer	1	
5	1251300-046093	Direction column adjusting screw nut M24X1	2	
6	1244100-015000	ZT250－S Adjusting nut rubber pad	1	
7	1224100-005000	ZT250－S steering stem dust cap (Up)	1	
8	1130900-024000	ZT250－S upper bead top	1	
9	1130900-022000	ZT250－S upper connect iron ball	2	
10	1130900-026000	ZT250－S upper steel bowl	2	

PROCEDURE:

●When the front fork is slightly swaying or when the direction handle is swung

Check if the pressure of the front tire is the recommended air pressure at room temperature: 250 kPa.

If it is lower than the recommended air pressure, the front tire pressure should be inflated to 350 kPa first, and then deflated to 250kPa. If it is otherwise set the front wheel and turn to inspect the tire tread, if it is worn or deformed, the front tire needs to be replaced. If no, continue to operate.

●Check steering device

Set up the front wheel and shake the lower part of the fork by hand to check if the steering shaft is loose or if the left and right rotations are not flexible.

Adjust the adjustment nut:

Remove the trim nut (1) with a 30# ring spanner, remove the spacer (2), and remove the bolt (3) with 6# inner hexagon socket. The direction of the upper board assembly wrapped with a clean cloth and then placed to prevent scratches. Remove the lock washer (4); remove the upper adjustment nut (5) with a hook wrench and remove the pad (6).

If the steering resistance is too large, turn the lower adjustment nut (5) counterclockwise. If the brake is slightly swaying or swings, rotate clockwise. The torque is about 14N.m. It is appropriate.

When reassembling, the top adjusting nut only needs to be screwed to align with the bottom nut groove, so as not to over-tighten to avoid excessive deformation of the pad (6); the torque requirement of the decorative nut (1) is 100 Nm.

● Steering bearing

If the above operation still can not rule out excessive steering resistance or stuck as follows:

Remove the adjusting nut (5), remove the upper dust cover (7), shaft ring (8), and connecting ball (9), remove the directional column & front shock absorber & front wheel assembly, and check the shaft ring and the connecting steel ball for abnormal wear or rust . At the same time, inspect the seat ring (10) in the standpipe in front of the frame for abnormal wear or rust. The newly replaced conjoined steel ball should be evenly greased, pay attention to the amount of grease.

CAUTION:

●The motorcycle should be fixed before operation. The material should be protected during the disassembly to prevent scratches.

●If the steering is adjusted too tightly, the steering force will be greater. If the steering is too loose, the front of the motorcycle will be slightly shaken during braking, and adjustments must be made according to the actual needs of the driver.

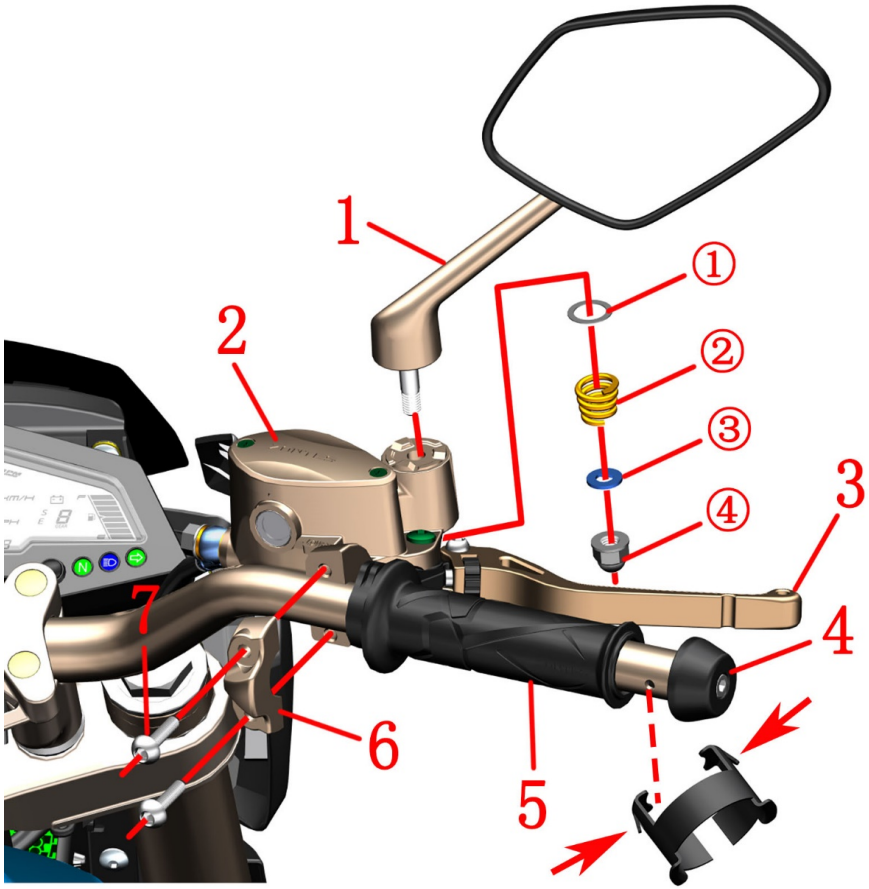

Fig.5 FRONT FORK COMPONENT		Right hand component	CHK ADJ	
NO.	PART NO.	PART NAME	QTY	CAUTION
1	1194100-002000	ZT250－S right rearview mirror	1	
2	1100300-044000	ZT125T front disc main pump assembly（without rocker arm）	1	
3	1134100-032000	ZT250-R Right handle rocker (Machine)	1	
4	1134200-023000	ZT250－R balance block assembly	1	
5	1244100-042000	ZT250－R right handle bar rubber sleeve	1	
6	1134100-019000	ZT250-R right hand half cover	1	
7	1251100-121093	Non-standard bolt M8×25 (color zinc)	2	

PROCEDURE:

●Rearview mirror

Hold the mirror stem in one hand, remove the nut ④ with a sleeve, and remove the small pad ③, the spring ② and the large pad ①. Remove the mirror from the front brake master pump.

●Right handlebar to put rubber sleeve, balance block

Push the rubber sleeve (5) with the right handlebar to push forward to expose the upper balance block fixing hole; use the tool to press the convex parts at both ends of the elastic block on the balance block and pull out the balance block assembly (4), and then put the right handle Remove the rubber sleeve (5).

●Right handlebar half cover

Hold the front disc brake main pump (2) with one hand, and remove the bolt (7) with a 6# inner hexagon socket. remove the half cover of right handle bar (6).

CAUTION:

●The motorcycle should be fixed after horizontal support.

●Periodically check that the fluid level of the brake fluid is between 3/4 of the observation window.

●Do not flush the cup directly with high pressure water.

●The small spacer of the rear view mirror anti-rotation limit slot needs to be aligned with the slot on the mirror bar bolt.

●The right handlebar refers to the switch to replace the throttle line.

●The joint between the front disc brake main pump and the half cover should be aligned with the right hand to match the triangle on the switch.

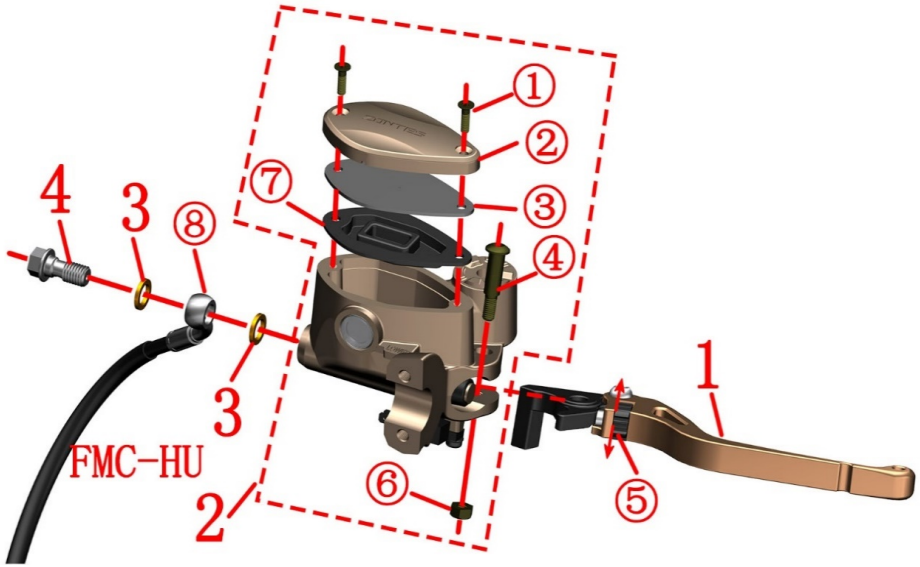

Fig.6 FRONT FORK COMPONENT		Add brake fluid, rocker adjustment	CHK ADJ	
NO.	PART NO.	PART NAME	QTY	CAUTION
1	1134100-032000	ZT250－R Right handle rocker (Machine)	1	
2	1100300-044000	ZT125T front disc main pump assembly	1	
3	1251513-013000	Disc brake pipe copper washer φ 15× φ 10.2 × 1.5	2	
4	1251100-112000	Disc brake pipe bolt M10×1－22	1	32N.m

PROCEDURE:

● Front disc brake main pump

Fix the front disc brake main pump, remove the bolt (4) and copper pad (3) with a 12# sleeve, and do not disassemble if it does not need to be replaced. Always replace the tubing connector ⑧ at a high level to prevent air from entering the tubing and cause brake failure. Also clean oil should be removed to prevent dripping onto parts such as covers or mufflers. After replacement, be sure to continuously hold the swing arm(1) and tap the disc brake main pump (2) to remove a small amount of gas entering the brake oil circuit, and confirm that the brake is returned to normal.

●Rocker

Rotating the adjusting nut ⑤ can adjust the distance between the rocker arm and the handle rubber sleeve to adapt to different driver's feel.

If you need to replace the rocker arm, use a 5# inner hexagon socket to fix the bolt ④. Then use a 10# sleeve or ring spanner to remove the nut ⑥. Remove the bolt④ and remove the rocker arm (1).

●Add brake fluid

Before driving the motorcycle, check whether the brake fluid level is above the “LOWER” marking. If not, check the brake disc or brake disc for wear and whether there is any oil leakage or oil leakage in the brake system. Abnormal needs to add brake fluid.

The brake fluid can only be added after the motorcycle is fixed horizontally.

Remove the bolt ① with a Phillips screwdriver and remove the upper cover②, the cover plate③, and the seal gasket ⑦.

Add DOT4 brake fluid to 3/4 of the transparent observation window of the front disc brake master pump.

Be sure to clean the foreign body before reassembling it.

CAUTION:

● The motorcycle should be fixed after horizontal support and check.

● Periodically check that the fluid level of the brake fluid is at 3/4 of the observation window.

● If the liquid level is under "LOWER", check the brake disc wear and brake system for leaks.

● If you swallow the brake fluid, contact poison control center or hospital immediately; if you get into your eyes, seek medical attention immediately after flushing with clean water.

● Keep brake fluid away from children and pets.

● Do not flush the cup directly with high-pressure water.

● Do not mix water, dust, impurities, and silicic acid or petroleum-based liquids, as this may cause serious damage to the brake system.

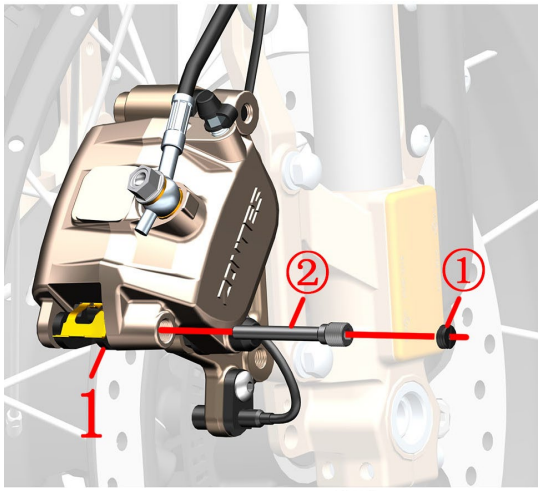

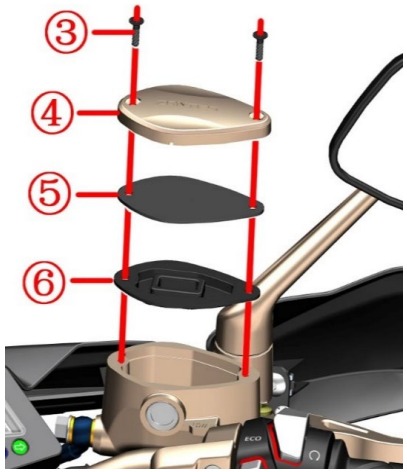

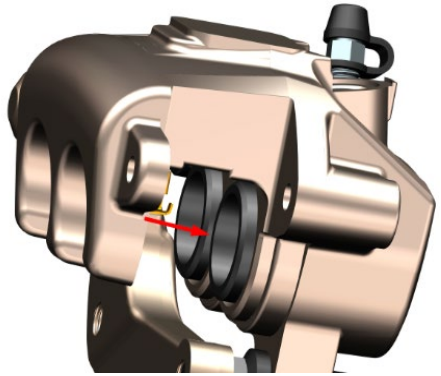

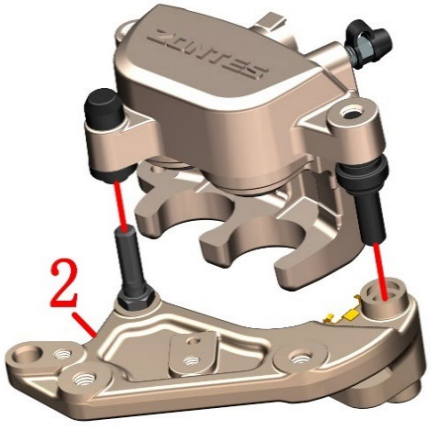



Fig.7 FRONT FORK COMPONENT		Replace the front brake pads	CHK ADJ	
NO.	PART NO.	PART NAME	QTY	CAUTION
1	1100100-704000	KD150－U front disk brake piece(SF627)	1	after-sales
2	1100100-570000	ZT310－T front brake caliper mounting plate	1	after-sales

PROCEDURE:

●Replace the front brake pad

Use a screwdriver to remove the nut①.

Remove pin ② with a 5# inner hexagon socket.

Remove the brake pad (1).

Clean out foreign matter such as dust on the outer edge of the piston.

Use a Phillips screwdriver to remove the bolt ③ on the front brake main pump assembly, remove the top cover ④, cover plate ⑤, and seal gasket ⑥.

Push the piston in the direction of the arrow.

Restore the front disc brake main pump assembly, it must be accurately assembled in place.

Put a new brake pad, be sure to place the brake pad close to the card slot, as shown on the left.

Lock the pin ② with a 5# inner hexagon socket.

Use a flathead screwdriver to lock the nut①.

Repeatedly holding the brake handle until braking force is restored.

CAUTION:

●The motorcycle support should be fixed before operation.

●Check the brake discs and brake discs regularly for wear. Regularly check if the brake fluid level in the observation window of the front disc brake master pump is 3/4.

●It is strictly prohibited to disassemble the oil pipe bolts and gas discharge nozzle bolts when replacing the brake pads to prevent air from entering the pipeline and causing brake failure.

●Do not shake the front after disassembling the front brake oil cup cover to prevent the brake fluid from overflowing.

●After replacing the brake pads, the new brake pads should be operated for about 300 km to fully run in order to achieve the best braking effect. Take care to leave enough braking distance during running-in.

●It is recommended to replace brake pads in pairs with qualified maintenance units.

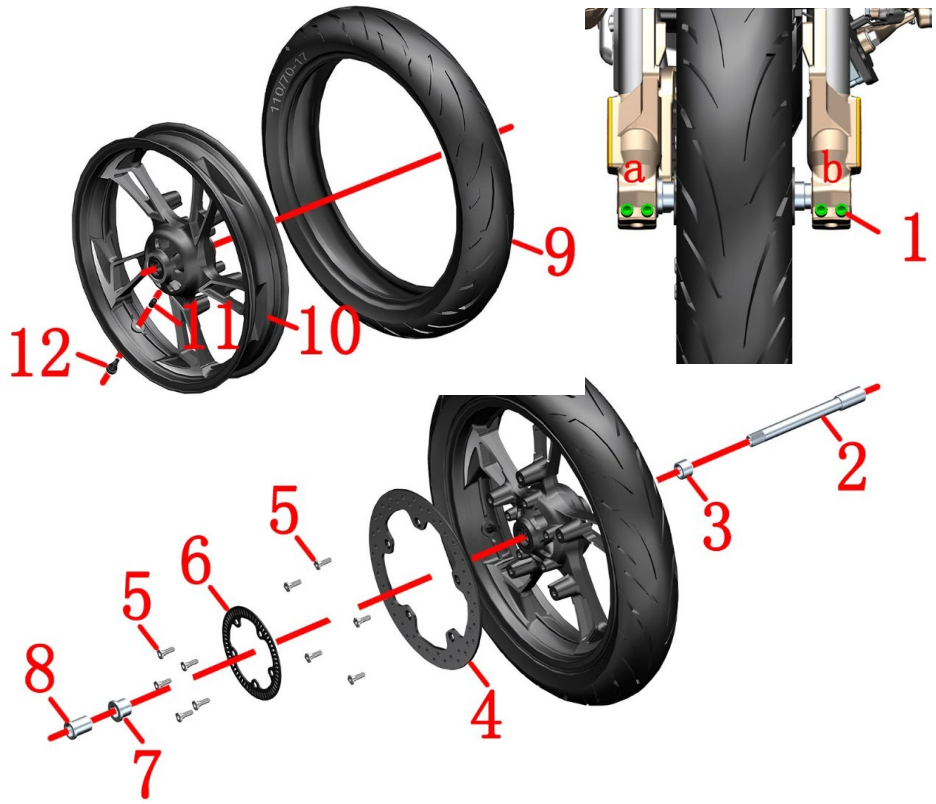

Fig.8 FRONT FORK COMPONENT		Front wheel component	CHK ADJ	
NO.	PART NO.	PART NAME	QTY	CAUTION
1	1250205-023000	GB70.1 inner hexagonal M8X35 (environmental color)	4	20N.m
2	1094100-033000	ZT250－R front wheel hollow shaft	1	
3	1094100-008000	ZT250－R front right sleeve	1	
4	1100100-601000	KD150－U front brake disc plate(300 × 4.5 / KD)	1	
5	1251100-117093	Non－standard inner hex bolt M8×25(color zinc)	10	22～24N.m
6	1274200-058000	ABS induction ring (60 teeth)	1	
7	1094100-036000	ZT250－R front wheel right shaft sleeve	1	
8	1094100-037000	ZT250－R front wheel right fixed bushing	1	
9	1230100-445000	110/70-17 (CMNK01) environmental protection vacuum tire	1	
10	1091200-032000	KD150－U bright black front rim (3.0 × 17)	1	
11	1230200-006000	HJ100－D tire valve cap	1	
12	1230100-047000	Environmental vacuum tyre valve spile(TR－412)	1	

PROCEDURE:

●Tire and wheel component

Remove the 2 bolts (1) on the left front shock absorber bottom "b" with a 6# inner hexagon socket. Hold the front wheel firstand then remove the hollow shaft (2) with a 17# inner hexagon socket, remove the left sleeve (3), and move thefront wheel component downward to remove the right sleeve (7) and front wheel component. Finally, use thehexagonal tool to remove the 2 bolts (1) of the right front shock absorber "a", remove the right fixing sleeve (8) .

●Brake disc, ABS ring gear

Using 6# inner hexagon socket remove 5pcs bolts(5),then take off the ABS ring gear(6) and the disc(4).

●Tire and rim component

Disassemble tire valve cap(11). Deflate the tire with tools. Then disassemble the rear tire(9) with professional tire changing machine. Disassemble the tire valve (12) with suitable tool.

CAUTION:

●Use a suitable tool to support the motorcycle to prevent accidents caused by dumping during disassembly.

●Take care when disassembling tires and rims to prevent damage to the material.

●After replacing the tire, check for leaks and balance.

●Unqualified tire repair fluid may corrode rims and cause safety hazards.

●Insufficient tire pressure may cause steering vibration, abnormal wear, etc.; summer tire pressure is too high there is a risk of puncture.

●Maintenance items

Tires: The tires should be regularly inspected for cracks, cracks, air pressure, etc. If the tread wear indicator has been worn out, the tire of the same specification type must be replaced. Refer to the relevant content of the manual for details.

Rim: Check the rim for any deformation, cracks, etc. Rotate the rim horizontally to check for sticking,swinging, etc.Rim seal φ42 × φ28 × 7; bearing model: 6004-2RS.

Axle: Use a dial indicator to check for deformation and bending.

Brake disc: After replacing the brake disc, the new brake disc should be operated for about 300 kilometers to fully run in order to achieve the best braking effect. Be careful to leave enough braking distance during running-in.

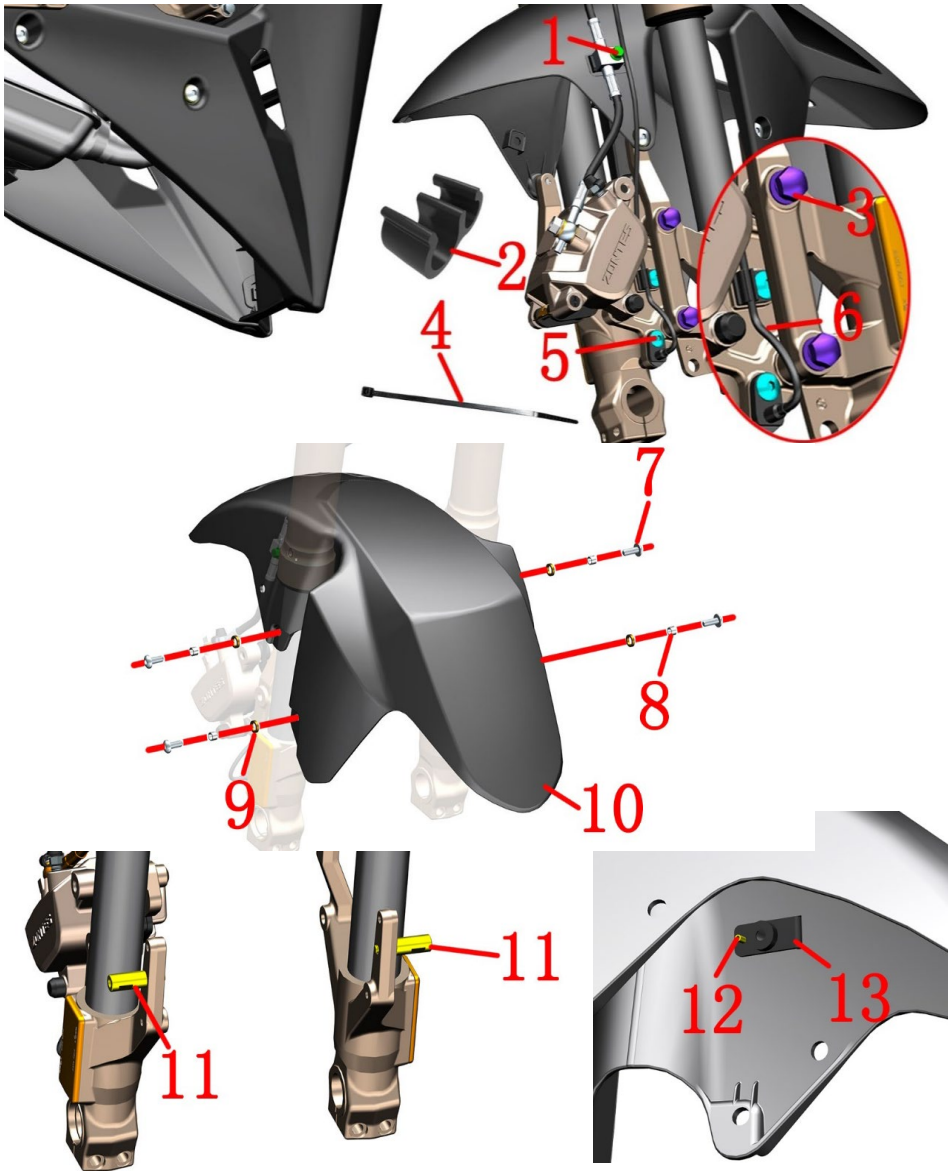

Fig.9 FRONT FORK COMPONENT		Front mud board & wheel speed sensor component	CHK ADJ	
NO.	PART NO.	PART NAME	QTY	CAUTION
1	1251100-061093	M6×22 Hex flang bolt thread level 8.8 (color zinc)	1	
2	1224100-044000	Wheel speed sensor clamp	3	
3	1251100-080094	Non－standard bolt M8×37(color zinc)	2	
4	1224100-037000	Grade 0 flame retardant tie (black 3.6×295)	2	
5	1251100-101000	Non－standard bolt M6×12 (304 stainless steel)	1	
6	1184200-045000	DF30 wheel speed sensor	1	
7	1251100-102000	Non－standard bolt M6×16(304 stainless steel)	4	
8	1274100-018000	ZT250－S anti－hot plate sleeve muffler	4	
9	1244100-037000	φ12×φ8.5×2.5 circle buffer glue	4	
10		ZT310-R front fender assembly assembly	1	
11	1274200-035194	Front fender liner ZT310 (black zinc)	2	
12	1274200-038000	ZT310－X Front fender front oil outlet pipe fixed seat	1	after-sales
13	1250402-001091	GB12615 φ3×10 Rivet	1	

PROCEDURE:

●Wheel speed sensor

Pull out the plug of the wheel speed sensor (6); then remove 3 pcs clamp(2). Cut off the belting(4).Using 4# inner hexagon socket remove bolt(5),take off the bolt(6).

●Front disc brake caliper

Using 8# sleeve remove bolt(1) and using 14# sleeve remove bolts(3),so that the caliper will hang down naturally. It is forbidden to invert the caliper toprevent the air from entering and causing the brake to fail.

●Front mud board component

Hold the front mud board componet with your hand and then remove the 4 bolts(7) with a 4# inner hexagon socket and remove the bushing(8) and cushion rubber(9), Remove the front fender (10).

Use a 10# open-end wrench to remove the two front fender bushes (11) on the front shock absorber.

The inside of the front mudguard can be protected with reticle or double-sided tape around the rivet(12), then the rivet(12) is ground off with a small sander, and then the rivet(12) and the fixing seat(13) are removed.

CAUTION:

●The motorcycle support should be fixed during the disassembly process to prevent accidents caused byincline.

●Disassemble the oil pipe clamp and the sensor wire clamp should pay attention to the strength.

●Pay attention to the strength when disassembling the front mud plate to prevent scratching the paint surface.

●Rivets need to be assembled with professional tools.

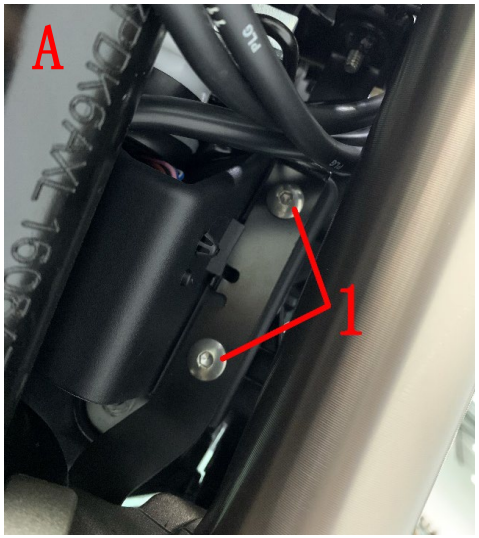

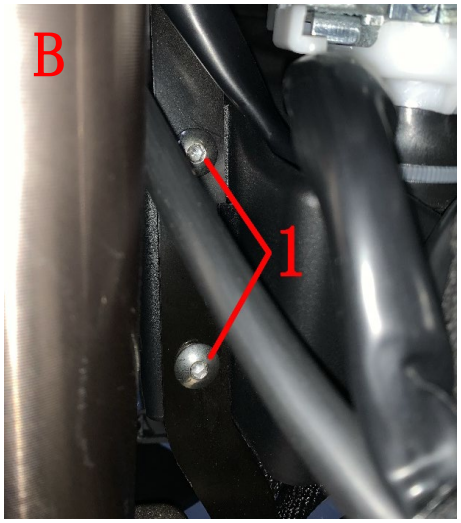

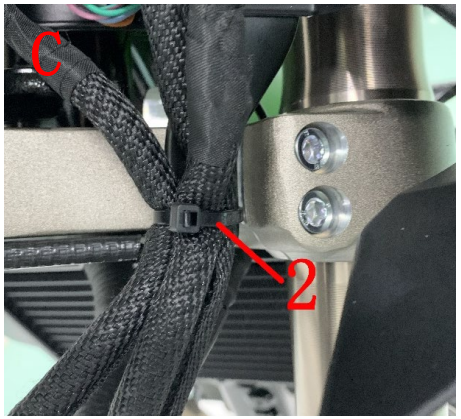



Fig.10 FRONT FORK COMPONENT		Head and headlights component 1	CHK ADJ	
NO.	PART NO.	PART NAME	QTY	CAUTION
1	1251100-101000	Non-standard bolt M6×12（304 stainless steel）	4	
2	1224100-037000	grade 0 flame retardant tie (black 3.6×295)	1	

PROCEDURE:

●Remove the headlight

Turn the stearing to the far left, and remove the 2 bolts (1) in Figure A.

Turn the stearing to the far right, and remove the 2 bolts (1) in Figure B. Use scissors to cut off the tie (2) in Figure C.

Unplug all the plugs in Figure D and remove the headlights.

CAUTION:

●Pay attention to the force when removing the cable and unplugging the plug and the cable to avoid damage.

●The head unit should be supported during the disassembly process and protective measures should be taken toprevent scratching the lamp cover or paint surface.

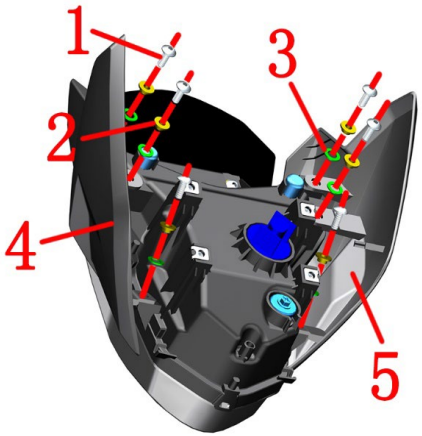

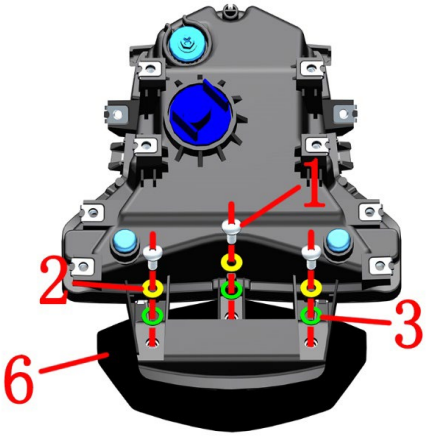

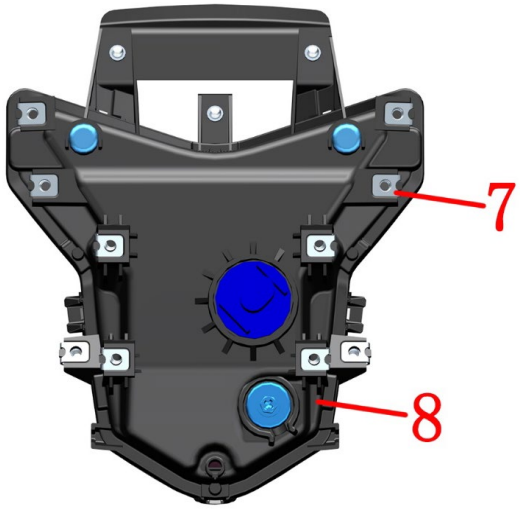



Fig.11 FRONT FORK COMPONENT		Head and headlights component 2	CHK ADJ	
NO.	PART NO.	PART NAME	QTY	CAUTION
1	1251100-102000	Non-standard bolt M6×16（304 stainless steel）	9	
2	1274100-057095	Flanging bushing φ6.2×φ8.5×3.5＋φ14×1.5	9	
3	1244100-052000	Buffer rubber of flanging bushing （φ8.5×φ14×1）	9	
4	4041201-152051	KD150－Z2 dark gray head cover left part	1	
5	4041201-153051	KD150－Z2 dark gray head cover right part	1	
6	4041201-224000	ZT155-Z2 windshield	1	
7	1251300-063093	Plywood M6×11×15（color zinc）	13	
8	1170300-099000	SK150-Z headlights	1	
9	1240300-066000	KD250-J head cover pad	1	

PROCEDURE:

●Left and right head cover

Remove the 6 bolts (1) with a 4# inner hexagon, take out the bushing (2), cushion rubber (3), and remove the left head cover (4) and right head cover (5).

●Windshield

Use 4# inner hexagon to remove 3 bolts (1), take out bushing (2), cushion rubber (3), and take off windshield (5). (The rubber pad (9) on the upper part of the headlight rear shell needs to be cut into two parts and pasted on the upper part of the headlight rear shell respectively.)

CAUTION:

●The head unit should be supported during the disassembly process and protective measures should be taken toprevent scratching the lamp cover or paint surface.

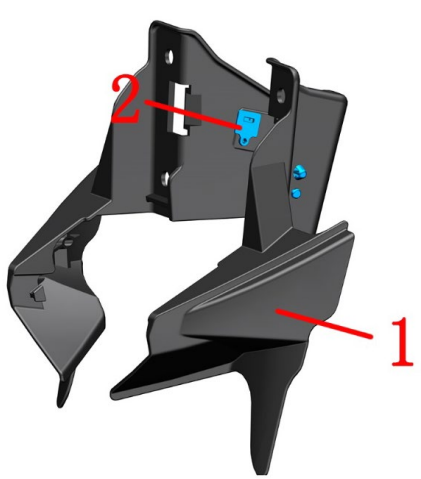

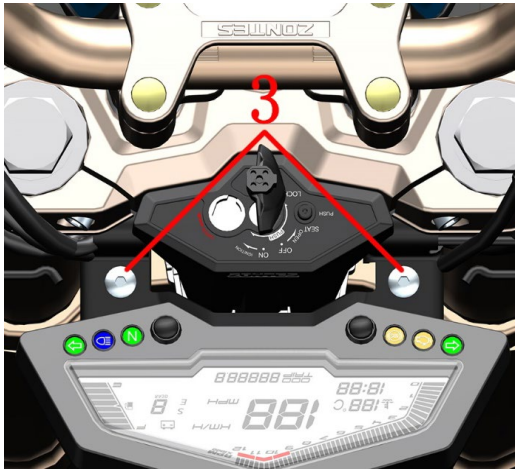

Fig.12 FRONT FORK COMPONENT		Head and headlights component 3	CHK ADJ	
NO.	PART NO.	PART NAME	QTY	CAUTION
1	1221200-087000	KD150－Z2 hood rear case	1	
2	1224200-008000	ZT310－R cable plastic staple	2	
3	1251100-102000	Non-standard bolt M6×16（304 stainless steel）	2	
4	1250105-138093	GB5789M6×20 (environmental color)	2	
5	1251700-059093	Flanging bushingφ6.4×φ9×8＋φ18×2	2	
6	1240400-007000	Battery holder buffer aprons	2	
7	1240300-021000	HJ125－6 pod glass strip (1.5m)	1	38mm
8	1271200-137000	KD150－Z2 lower part of headlight bracket	1	

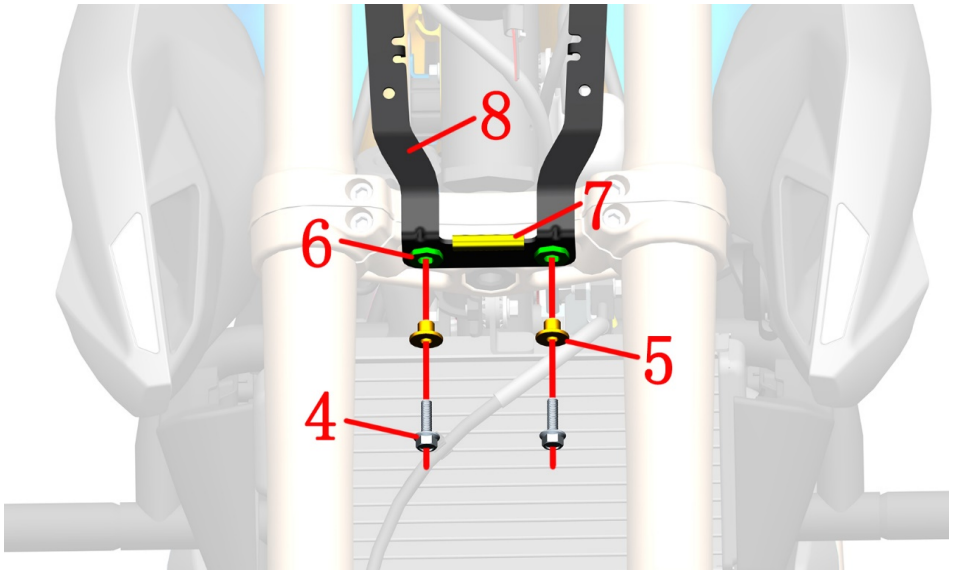

PROCEDURE:

●Head cover rear shell

After removing the headlights and arranging the wiring harness, you can directly remove the hood rear shell (1) from the motorcycle, and remove the two wire insertion clips (2) from the hood rear shell (1).

●Headlight bracket

Use 4# inner hexagon to remove 2 bolts (3), then use 10# torx wrench to remove the 2 bolts at the lower link plate (4) remove the bushing (5), you can take out the headlight bracket, and finally remove the buffer on the headlight bracket Glue (6). (The glass strip on the headlight bracket is about 38mm.)

CAUTION:

●The head unit should be supported during the disassembly process and protective measures should be taken toprevent scratching the lamp cover or paint surface.

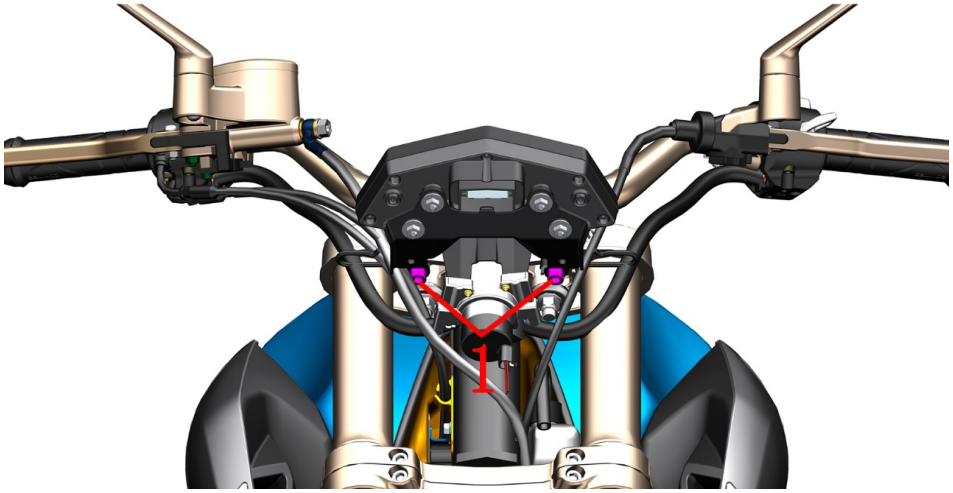

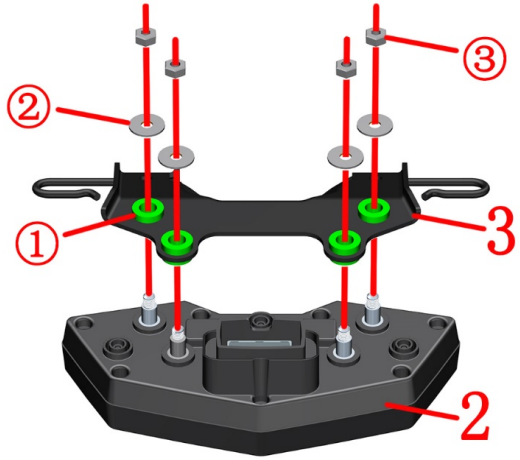

Fig.13 FRONT FORK COMPONENT		Speedometer component	CHK ADJ	
NO.	PART NO.	PART NAME	QTY	CAUTION
1	1250205-040095	GB70.1 inner hex bolt M8×16(color Zinc)	2	
2	1166100-001000	ZT125－U electronic instrument (electrospray version)	1	
3	1271200-134000	KD150－Z2 instrument bracket	1	

PROCEDURE:

●Speedometer component

After finding the plug of the instrument, unplug it with 6# inner hexagon to remove the 2 bolts (1), and remove the instrument assembly.

●Instrument Stand

After fixing the instrument (2), use a 10# sleeve to respectively remove the nut ③ and the gasket② that come with the instrument.

Separate the instrument bracket assembly from the instrument(2).

Remov the side cover round rubber (4) from the instrument support (3).

CAUTION:

●Protective measures must be taken to prevent scratches on the instrument and decorative cover.

●Refer to the manual for details about the functions and setting methods of the instrument.

●When reinstalling the instrument, the torque of M6 nut is 8~12N.m. Excessive torque will easily break the stud on the instrument.

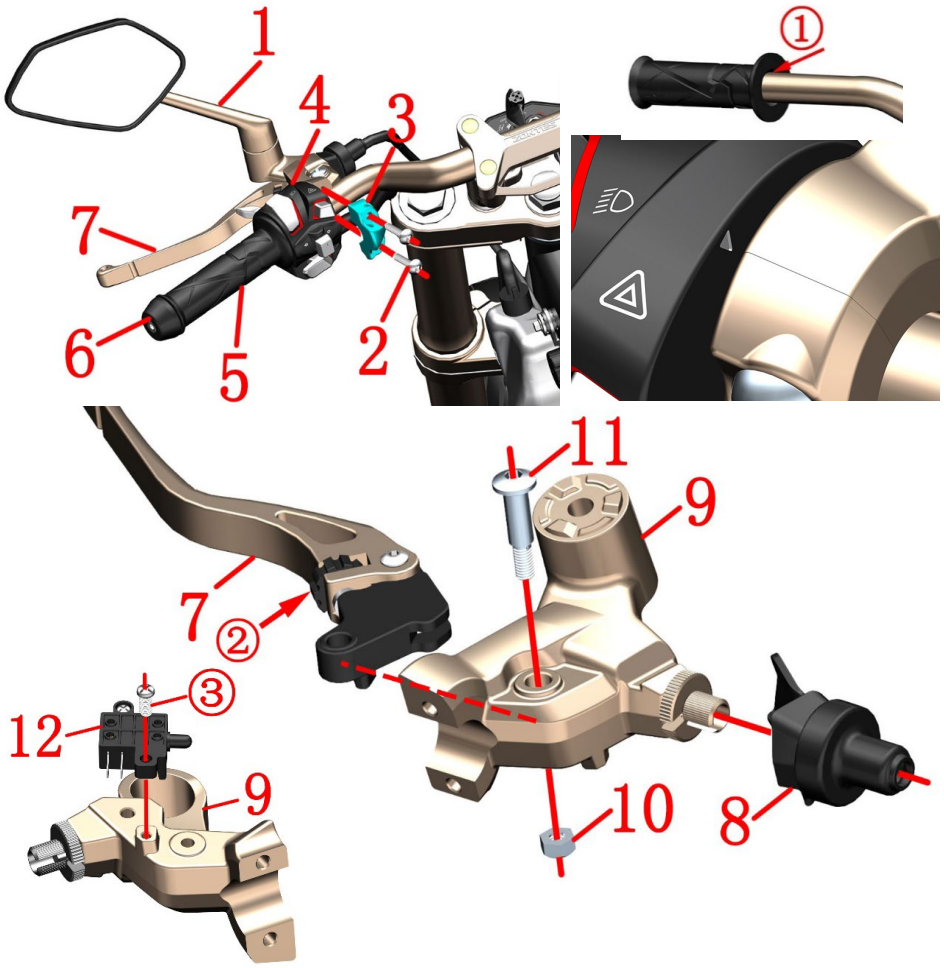

Fig.14 FRONT FORK COMPONENT		Left hand component	CHK / ADJ	
NO.	PART NO.	PART NAME	QTY	CAUTION
1	1194100-001000	ZT250－S left rearview mirror	1	
2	1251100-121093	Non-standard bolt M8×25 (color zinc)	2	
3	1134100-017000	ZT250－R half cover of left handle bar	1	
4	1184200-184000	ZT310-V1 left handlebar switch	1	
5	1244100-041000	ZT250-R left hand rubber sleeve	1	
6	1134200-023000	ZT250－R balance block assembly	1	
7	1134200-010000	ZT310－VLeft hand rocker arm (CNC)	1	
8	1244200-046000	ZT310-V clutch line sheath	1	
9	1134200-011000	ZT310-V left hand rocker arm assembly	1	
10	1251300-073000	GB/T6185 hexagonal nylon lock nut M6	1	
11	1251100-198000	Non-standard hexagon socket bolt M6×13-φ8×20	1	
12	1184100-107000	ZT250-R clutch switch	1	

CAUTION:

● The vehicle should be fixed before operation

● The disassembly and assembly of the clutch line is carried out according to the step of adjusting the clutch cable.

●Note the triangle symbol on the rocker arm assembly and the half cover seam alignment switch.

PROCEDURE:

●Left rear view mirror, left switch, rocker arm

Remove the clutch line by referring to the “Replace Clutch Line” procedure. Remove the left rear view mirror(1), left switch(4) by referring to the steps in "Right Handle Assembly" and "Add Brake Fluid, Adjusting Rocker Arm".

Using 6# inner hexagon socket remover 2pcs bolts(2) take off the half cover(3) and the left hand arm assembly.

●Left hand rubber sleeve and balance block assembly

Use a blow gun to blow the left hand grip①between the rubber sleeve(5) and the direction handle tube while moving the rubber sleeve inward until the balance block positioning hole is exposed.

Use the tool to press the convex part at both ends of the elastic piece on the balance block and pull out the balance block assembly(6).

Use a blow gun to blow the left hand grip(5) and the direction between the tubes, and move the outer sleeve to remove the left hand grip(5).

●Replace the left hand rocker arm and clutch switch

Take off the rubber sleeve(8).Then fix the bolt(11) with a 5# inner hexagon socket then remove the nut(10).

Remove the bolt(11) and remove the left-hand rocker arm(7) and the rocker arm assembly(9).

Rotate the adjusting nut② to adjust the distance between the rocker arm and the left handle to adjust the rubber sleeve to adapt to different driver's hand feeling.

First remove the clutch switch plug, then use a cross screwdriver to remove the bolt③, remove the clutch switch (12).

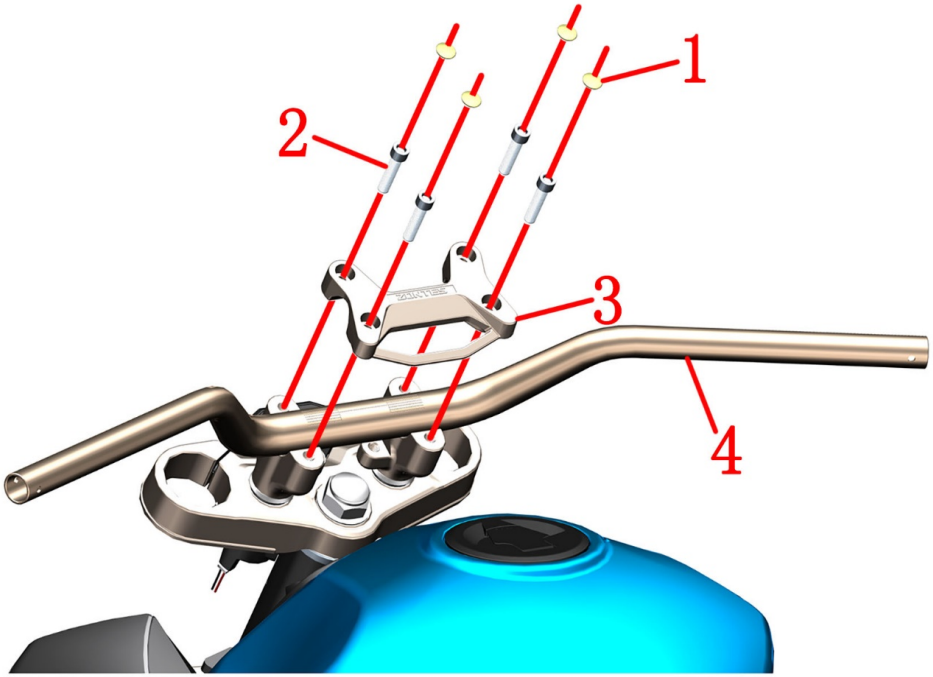

Fig.15 FRONT FORK COMPONENT		Directional lever component	CHK ADJ	
NO.	PART NO.	PART NAME	QTY	CAUTION
1	1224100-025000	ZT250－S M8 bolt decorative buckle	4	
2	1250205-023000	GB70.1 inner hexagonal M8X35 (environmental color)	4	
3	1134200-005000	ZT310－R press block of handle bar(home－made)	1	
4	1134200-003000	ZT310－R handle bar	1	

PROCEDURE:

●Directional components

Using a blade to pick up the decorative buckles(1), hold the direction handle(4) in one hand, and remove the bolt (2) with a hexagonal tool in one hand; remove the clamp(3) and finally remove the direction handle(4).

CAUTION:

●Protect protective measures to prevent scratching the appearance of the instrument case and the decorative cover.

●When assembling the clamping block, first tighten the 2 bolts at the front, and then tighten the bolts at the rear (close to the fuel tank side). Wrong sequence or diagonal locking may break the lock block.

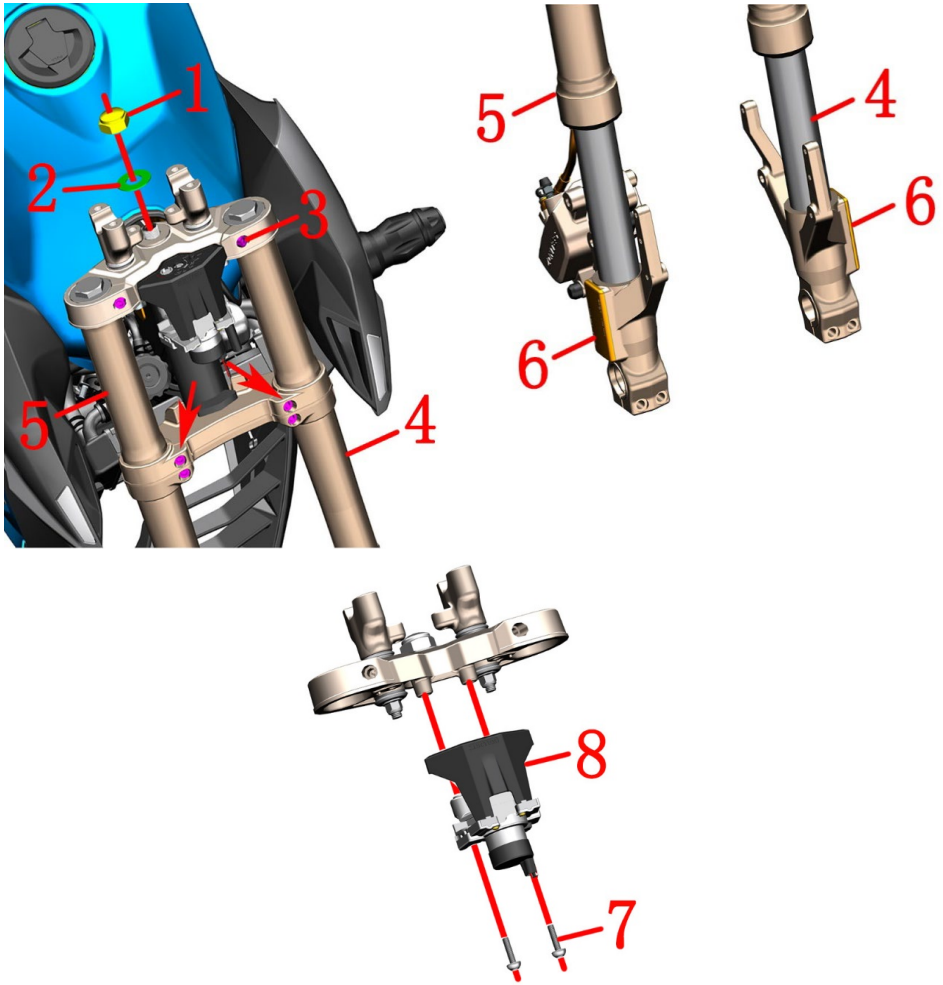

Fig.16 FRONT FORK COMPONENT		Front shock absorber, upper plate component	CHK ADJ	
NO.	PART NO.	PART NAME	QTY	CAUTION
1	1251300-045000	ZT250－S upper connection decoration nut(chroming)	1	100N.m
2	1251500-050000	ZT250－S upper connection gasket φ18.5×φ39×1	1	
3	1250205-023000	GB70.1 inner hexagonal M8X35 (environmental color)	6	25N.m
4		Left shock absorption	1	Includedereflective sheet
5		Right shock absorption	1	
6	1174100-001000	ZT250－S reflection light	2	after-sales
7	1251100-121093	Non－standard bolt M6×25 (environmental color)	2	
8	1181200-101000	KD150－G1 lock set	1	

PROCEDURE:

●Uplink board assembly

Locate the faucet lock plug and remove it; remove the nut(1) and remove the shims(2). Remove the upper plate bolt(3).

●Front left and right shock absorption

Remove the bolts(3) of the lower plate, and hold the shock absorber in the middle with one hand. Insert a slottedscrewdriver into the slot of the upper and lower plates to slightly enlarge the slot clearance, and disassemble the left shockabsorber (4) and the right shock absorber(5). under. Remove the upper plate assembly.

●Reflecting film

Reflective sheets are sold separately for sale (no replacement shock absorption). The heat-reflecting sheet can be movedback and forth by a hot air blower to reduce the viscosity of the double-sided adhesive after being heated, and the residualglue should be cleaned after removing the reflector.

●Faucet lock

Using 6# inner hexagon socket remove the faucet lock (9).

CAUTION:

●Use a flat-blade screwdriver to enlarge the gap between the upper and lower joint plates without applyingexcessive force to avoid damage.

●When removing the shock absorption, move it in the direction of axis, do not rotate or swing to prevent scratches on thesurface.

●The motorcycle support should be fixed during the disassembly process to prevent accidents caused byincline.

●For the disassembly of the lower link board assembly, see the previous "steering adjustment", which will not be repeated here.

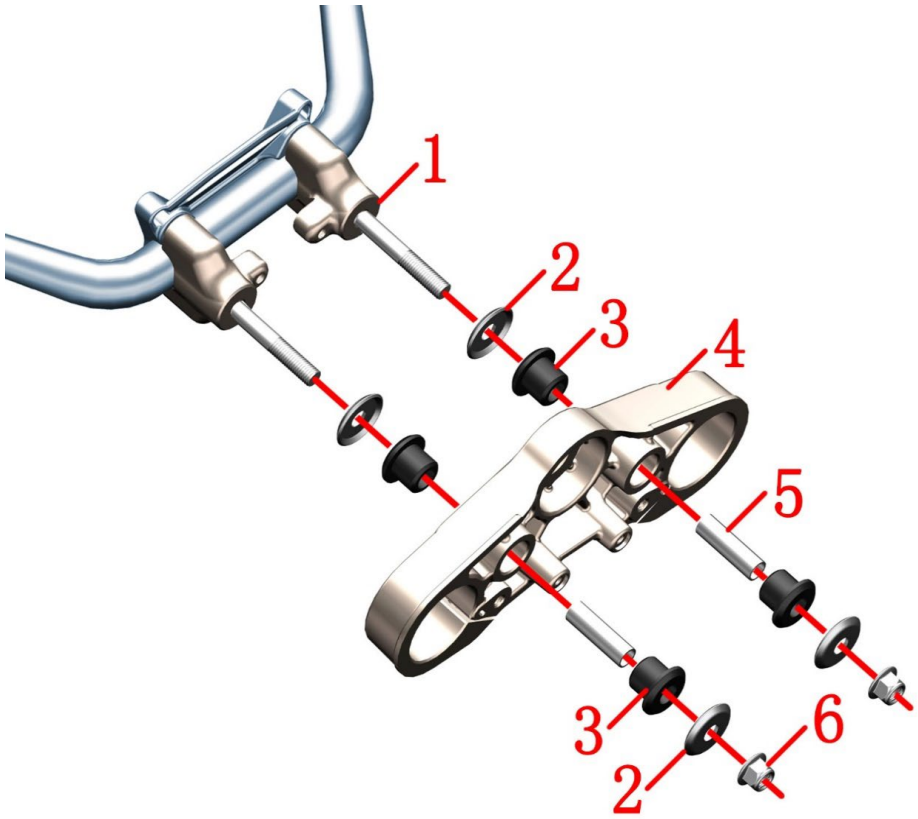

Fig.17 FRONT FORK COMPONENT		Uplink plate, direction handle block component	CHK ADJ	
NO.	PART NO.	PART NAME	QTY	CAUTION
1	1134200-012000	ZT310－R direction pad assembly	2	
2	1274200-018000	ZT310－R gasket of upper connecting board	4	
3	1244200-008000	ZT310－R buffer rubber of upper connecting board	4	
4	1134200-004000	ZT310－R upper connecting board(home－made)	1	
5	1251700-065000	ZT310－R bushing φ10×φ12×41	2	
6	1251300-057093	Non－standard nut M10×1.5(dacromet)	2	40N.m

PROCEDURE:

●Uplink plate and spacer assembly

In order to facilitate the direction of the block, the direction and the upper block should be assembled first to prevent the block from rotating during the disassembly process. The direction should be wrapped with cotton or other soft materials to prevent scratching the paint surface.

Remove the nut(6) with a 14# sleeve and remove the gasket(2), cushion rubber(3), and bushing(5).

Remove the upper plate(4).

The spacer(1), the upper clamp and the direction handle are disassembled.

CAUTION:

●Protect protective measures to prevent scratching the appearance of parts.

●When reassembling, it is necessary to use the direction to ensure that the center and direction of the spacers on both sides are coaxial with the center. First install 4 pieces of cushioning rubber into the upper plate and then install the bushing separately. Make sure that the bushing is flush with the cushioning rubber, otherwise it should be reassembled. When tightening the nut, ensure that the torque is 40N.m. Check the buffer for spillage and reassemble if necessary.

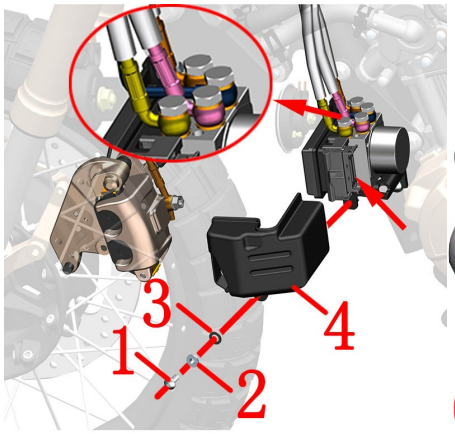

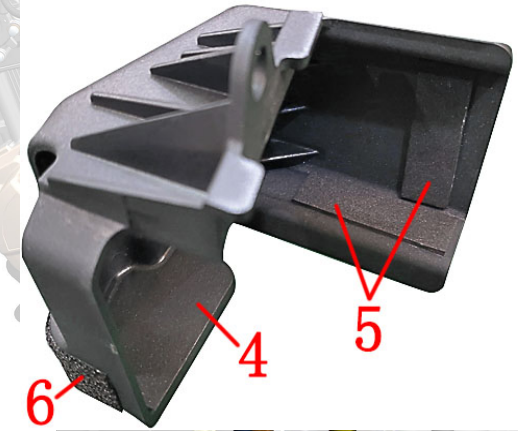

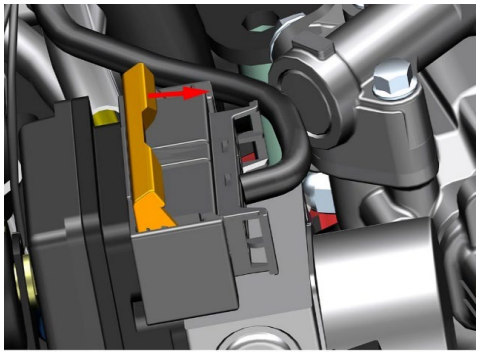

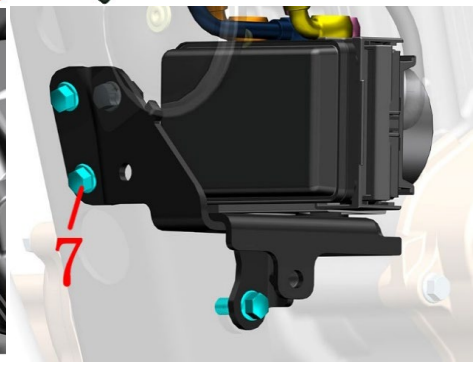

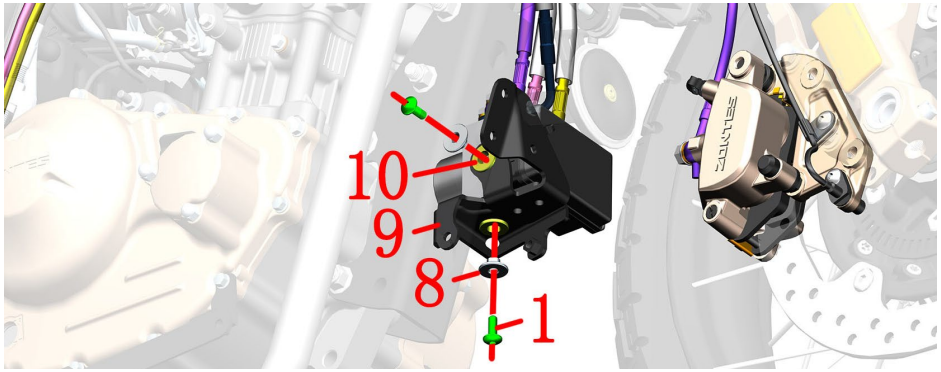

Fig.18 FRONT FORK COMPONENT		ABS brake system 1	CHK ADJ	
NO.	PART NO.	PART NAME	QTY	CAUTION
1	1251100-102000	Non－standard bolt M6×16(304 stainless steel)	3	
2	1251700-059093	Flanging bushingφ6.4×φ9×8＋φ18×2(color zinc)	1	
3	1244100-052000	Buffer rubber of flanging bushing (φ8.5×φ14×1)	1	
4	1221200-097000	ABS hydraulic control unit protective cover	1	
5	1241200-062000	3M sponge pad (50×15×2)	2	
6	1244100-081000	Black foam single side tape	0.12	
7	1251112-001093	M6×16 Hexagon flange bolts (color zinc)	3	
8	1274100-007000	ZT250－S flanging sleeve(φ6.4×φ9×6＋φ20×2)	2	
9	4021200-027000	KD150－U hydraulic control unit bracket (two－stage)	1	
10	1244100-004000	ZT250－S Flanging bushing buffer	2	

PROCEDURE:

●Hydraulic control unit components

First use a 14# sleeve to loosen the bolts of the 4 disc brake oil pipes and then tighten them slightly to prevent oil leakage.

Use 4# inner hexagon to remove bolt (1), remove bushing (2) and cushion rubber (3), then remove protective cover (4). The protective cover (4) is pasted with sponge rubber pad (5) and tape (6).The length of the tape (6) is 1 meter. Here you need to cut 2 sections of 60mm in length and paste it to the position shown in the figure

Push the cable connector push rod away and unplug the connector.

Use a 8# sleeve to remove the 3 bolts (7) at the bracket, and pull out the hydraulic control unit assembly.

Use a 4# inner hexagon to remove the 2 bolts (1) fixing the hydraulic control unit, and remove the bush (8) and bracket (9). Remove the cushion rubber (10) from the support (9).

CAUTION:

●The seat cushion, fuel tank component, side cover and right surrounding component must be removed in advance.

●Be sure to disassemble the muffler and engine after they have cooled down completely. The horizontal support of thevehicle should be fixed before disassembly and assembly work.

●The precautions for brake fluid are described in the previous section.

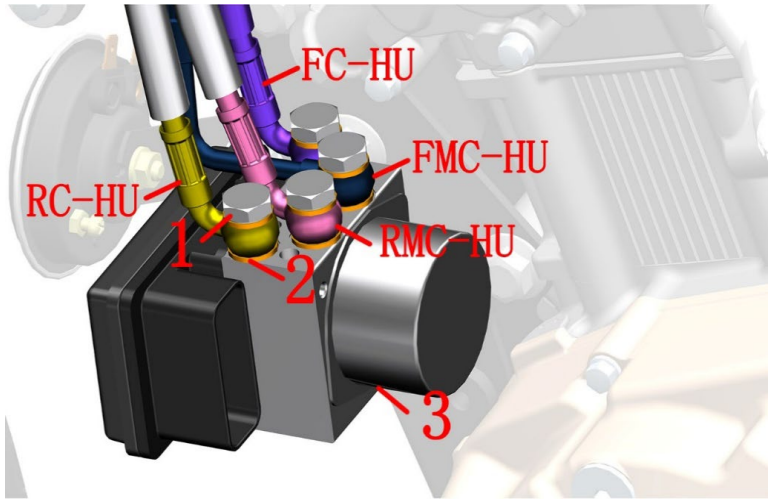

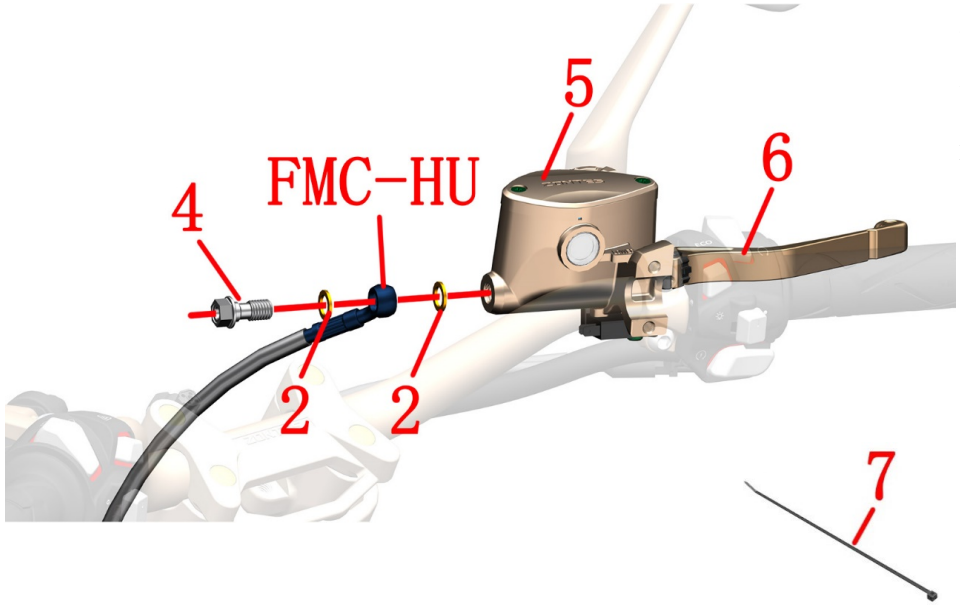

Fig.19 FRONT FORK COMPONENT		ABS brake system 2	CHK ADJ	
NO.	PART NO.	PART NAME	QTY	CAUTION
1	1251100-248000	Disc brake oil pipe hexagon head bolt M10 × 1 × 20	4	18～20N.m
2	1251513-013000	Disc brake pipe copper washer φ 15× φ 10.2 × 1.5	10	
3	1100100-676000	ZT310 hydraulic control unit (wet type)	1	
4	1251100-112000	Disc brake pipe bolt M10×1－22	1	30～32N.m
5	1100300-044000	ZT125T front disc main pump assembly(without rocker	1	
6	1134100-032000	ZT250－R Right handle rocker (Machine)	1	
7	1224100-037000	Grade 0 flame retardant tie (black 3.6×295)	1	

PROCEDURE:

● Release brake fluid

Place holder to collect wasted brake fluid under the ABS hydraulic control unit.

After wearing the waterproof gloves, remove the bolts(1) with a 14# sleeve，take off the copper washer(2) and 4pcs oil pipes.

Afterthe brake fluid is discharged, remove the hydraulic control unit and wipe off the oil. Be careful not to let the brake fluidcome into contact with the cable connector to prevent poor contact due to corrosion.

RC-HU is connected to the hydraulic control unit and rear brake caliper; RMC-HU is the rear disc brake main pump; FC-HU is the front disc brake caliper; FMC-HU is the front disc brake main pump.

●FMC-HU

The oil pipe, front disc brake main pump, rocker arm assembly and disassembly refer to the previous steps in "Adding brake fluid and rocker arm adjustment".

CAUTION:

●Be sure to disassemble the muffler and engine after they have cooled down completely. The horizontal support of thevehicle should be fixed before disassembly and assembly work.

●The precautions for brake fluid are described in the previous section.

●It is recommended to replace the two copper washers (2) at the same timewhen replacing the tubing. The bolts (1) and (4) needn't to be replaced if they are not damaged.

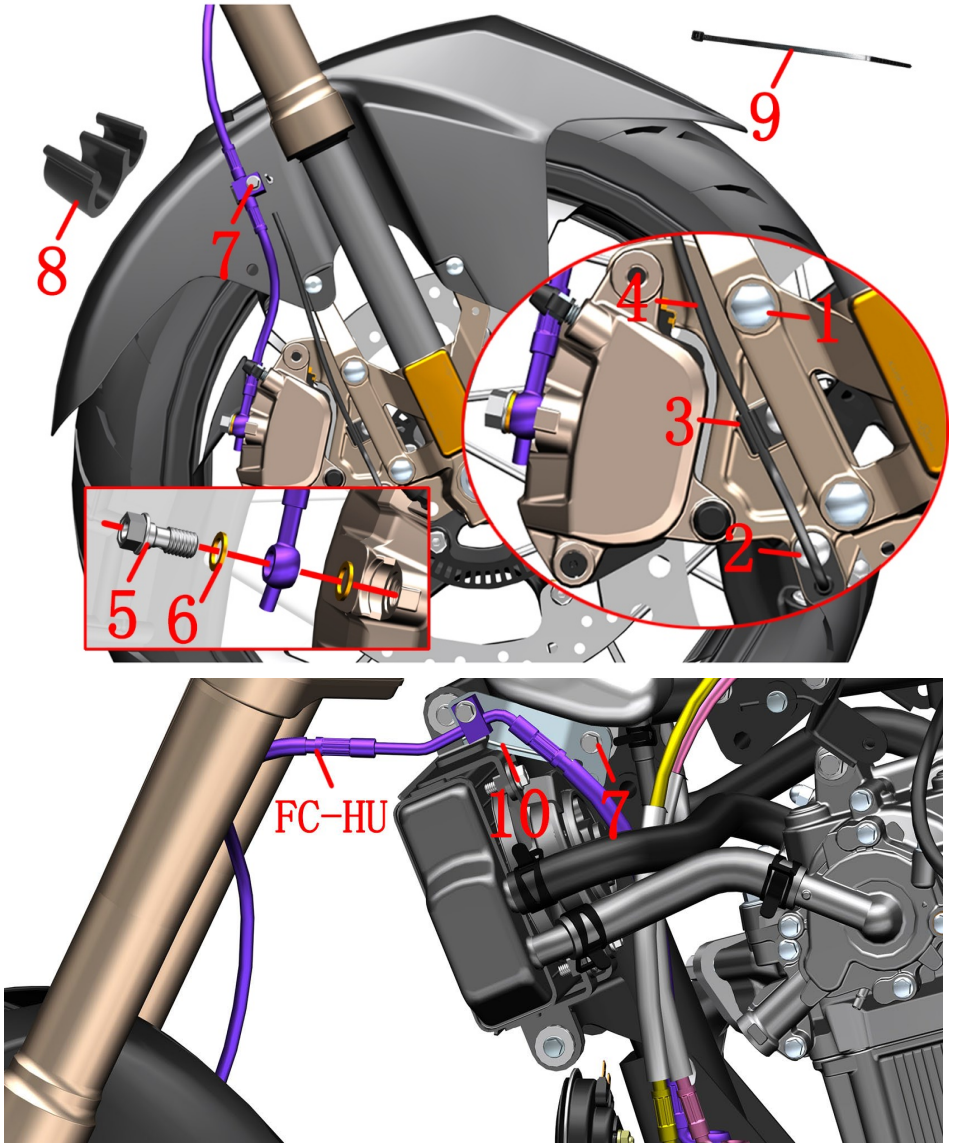

Fig.20 FRONT FORK COMPONENT		ABS brake system 3	CHK ADJ	
NO.	PART NO.	PART NAME	QTY	CAUTION
1	1251100-080094	Non－standard bolt M8×37(color zinc)	2	
2	1251100-101000	Non－standard bolt M6×12 (304 stainless steel)	2	
3	1224200-127000	ZT310－T front wheel WSS wire clip	1	
4	1184200-045000	DF30 wheel speed sensor	1	
5	1251100-112000	Disc brake pipe bolt M10×1－22	1	
6	1251513-013000	Disc brake pipe copper washer φ 15× φ 10.2 × 1.5	2	
7	1251100-061093	M6×22 Hex flang bolt thread level 8.8 (color zinc)	3	
8	1224100-044000	Wheel speed sensor clamp	3	
9	1224100-037000	Grade 0 flame retardant tie (black 3.6×295)	1	
10	1271200-100000	KD150－U disc brake front oil pipe bracket	1	

PROCEDURE:

● Release brake fluid

Place the oil pan under the front disc brake caliper.

After wearing the waterproof gloves, remove the bolt (5) with a 12# sleeve; remove the copper washers(6).

Using 14# sleeve remove 2pcs bolts (1) then take the front disc brake caliper from the shock absorber.

First remove the wheel speed sensor (4)from the clamp (3), then remove the two bolts (2) and remove the wheelspeed sensor (4) and the clamp (3) from the front disc brake caliper. Organize the wheel speed sensor line neatly.

Using 8# sleeve remove the bolt(7) at the front mud board.Removing 2 pcs bolts on the bottom of the left water tank,take off the oil pipe bracket(10).

Cut the cable tie (9); remove the 3 clips (8). Then remove the FC-HU tubing. If you need to replace theFC-HU tubing, it is recommended to replace the two copper washers (6) at the same time; There is no need toreplace the bolts(5) if they are not damaged.

CAUTION:

●Be sure to disassemble the muffler and engine after they have cooled down completely. The horizontal support of thevehicle should be fixed before disassembly and assembly work.

●The precautions for brake fluid are described in the previous section.

●It is recommended to replace the two copper washers (6) at the same timewhen replacing the tubing. The bolts (5) needn't to be replaced if they are not damaged.

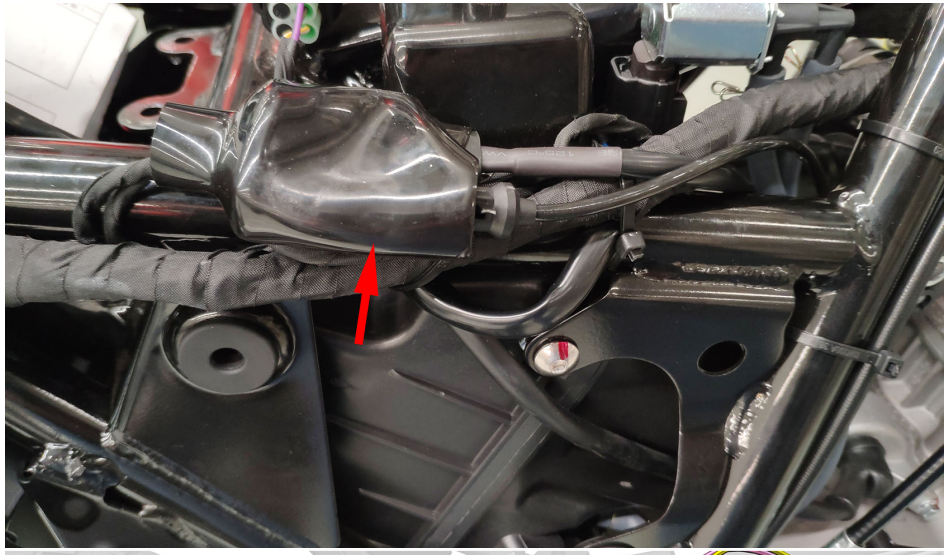

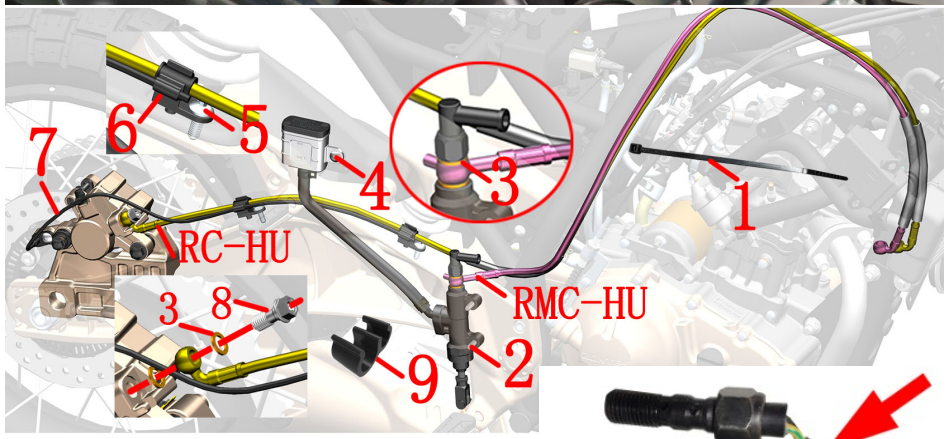



Fig.21 FRONT FORK COMPONENT		ABS brake system 4	CHK ADJ	
NO.	PART NO.	PART NAME	QTY	CAUTION
1	1224100-037000	Grade 0 flame retardant tie (black 3.6×295)	2	
2	1251100-121093	Non－standard bolt M6×25 (environmental color)	2	
3	1251513-013000	Disc brake pipe copper washer φ 15× φ 10.2 × 1.5	2	
4	1251100-101000	Non－standard bolt M6×12 (304 stainless steel)	1	
5	1251100-102000	Non－standard bolt M6×16 (304 stainless steel)	2	
6	1224200-003000	ZT310－Z Rear disc brake pipe clamp	2	
7	1184200-045000	DF30 wheel speed sensor	1	
8	1251100-112000	Disc brake pipe bolt M10×1－22	1	
9	1224100-044000	Wheel speed sensor clamp	2	

PROCEDURE:

●RMC-HU

Cut the cable tie (1)and find and remove the brake switch cable plug.

Refer to the steps of "Right footrest component-1" and "Right footrest component-2" take off the rear brake main pump.

After wearing the waterproof gloves, remove the brake fluid by referring to the procedure of adding the brakefluid of the rear brake master pump. Use a 14# open end wrench to loosen the brake switch nut. Remove the copper washer (3)and the RMC-HU oil tubing.

●Wheel speed sensor

Remove the wheel speed sensor cable(7) connector and pull it out. Pull the sensor cable out of the 2 pcs wheel speed sensor clamps (9). Remove the sensor wire after removing the 2 pcs disc brake tubing clamps(6).

Using 4# inner hexagon socket remove the bolt(4),remove the exhaust rubber cap then take off the wheel speed sensor cable(7).

●Rear disc brake caliper

Refer to the steps of removing the rear wheel assembly in the front, remove the rear axle nut and the right chain adjuster, and then retract the rear axle to the left to remove the rear disc brake caliper assembly. Put the rear axle, right chain adjuster and rear axle nut back into the rear fork.

●RC-HU

Place the oil pan under the rear disc brake caliper.

After wearing the waterproof gloves, remove the bolts (8) with a 12# sleeve; remove the copper washers (3). If you need to replace the RC-HU tubing, it is recommended to replace the two copper washers (3) at the same time; the bolts (8)can be replaced if they are not damaged.

CAUTION:

●The precautions for brake fluid are described in the previous section.

●It is recommended to replace two copper washers (4) at the same time when replacing the oil pipe, rear brakeswitch wire or disc brake main pump.

●The rear brake switch line is prohibited from rotating the rubber cap at the arrow indication. Replace thisswitch wire. Be careful not to wrap the cable around the tool.

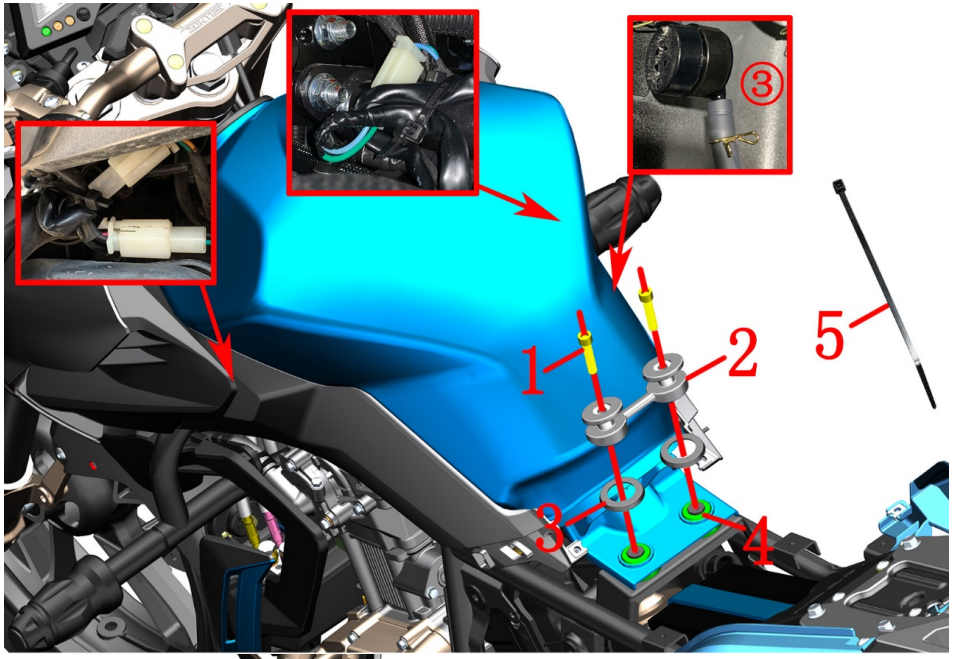

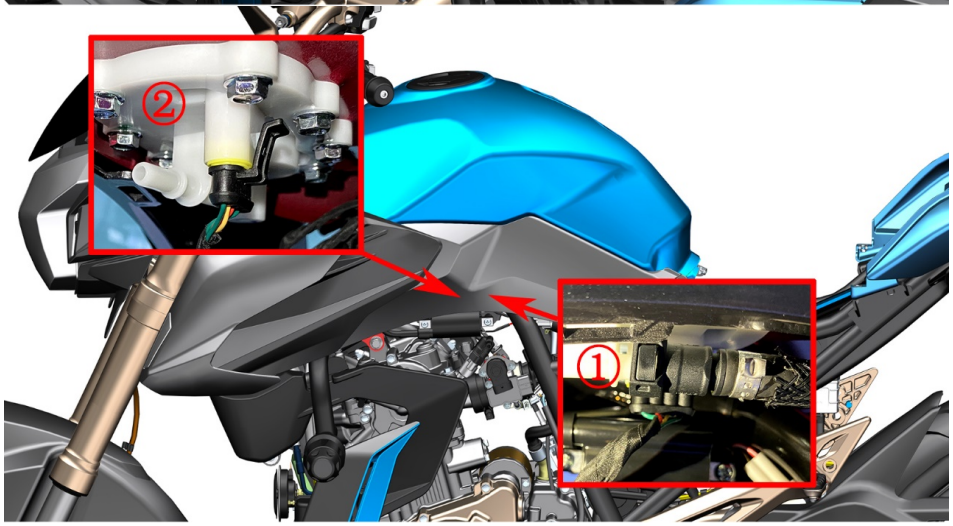

Fig.1 FUEL TANK COMPONENT		Fuel tank component	CHK ADJ	
NO.	PART NO.	PART NAME	QTY	CAUTION
1	1250205-023000	GB70.1 inner hexagonal M8X35 (army green)	2	
2	1244100-023000	ZT250－S fixed cushion block	1	
3	1244100-020000	ZT250－S tank pressure glue	2	
4	1244100-053000	ZT250-S fuel tank gasket	2	
5	1224100-037000	Grade 0 flame retardant tie (black 3.6×295)	2	

PROCEDURE:

●Fuel tank component

Use the key to unlock the cushion lock and remove the cushion. Follow the steps for removing the side cover to remove the left and right side covers.

Use scissors to cut off the cable ties (5) that bind the turn signal and USB interface on the left and right guard bars, and unplug the turn signal and USB interface by the way.

Use 6# inner hexagon to remove 2 bolts(1), take off the cushion fixing block(2), and remove the rubber (3)Rubber pad (4) does not need to be removed if it does not need to be replaced.

One person lifts the rear part of the fuel tank slightly, and one person unplugs the high-pressure fuel pipe plug ① and the fuel pump plug ② on the right side of the bike. Notice that the buckle of the fuel pump plug is on the inside and cannot be removed forcibly. Unplug the fuel pipe ③ connected to the dump valve of the carbon canister on the left side of the bike.

Grab the head of the fuel tank assembly with one hand and pull it back, and with the other hand, grab the rear part and lift it up and shake it left and right. Remove the fuel tank assembly from the bike and place it.

CAUTION:

●The parts should be protected during the disassembly process to prevent damage to the paint surface.

●When removing the buckle, pay attention to the strength to prevent damage to the buckle.

●When removing the high-pressure oil pipe, be sure to wait until the engine and muffler are completely cooledbefore operating to prevent accidental ignition of the fuel and cause fire.

●Fireworks, answering or dialing should be strictly prohibited near the car-breaking site to prevent accidents.

●A small amount of fuel leakage is required when the high-pressure oil pipe sub-assembly is pulled out, andthe fuel should be prevented from dripping to the outside of the engine or the muffler.

●It is recommended to use the oil pump to pump out the fuel or consume the fuel before disassembling the tankassembly.

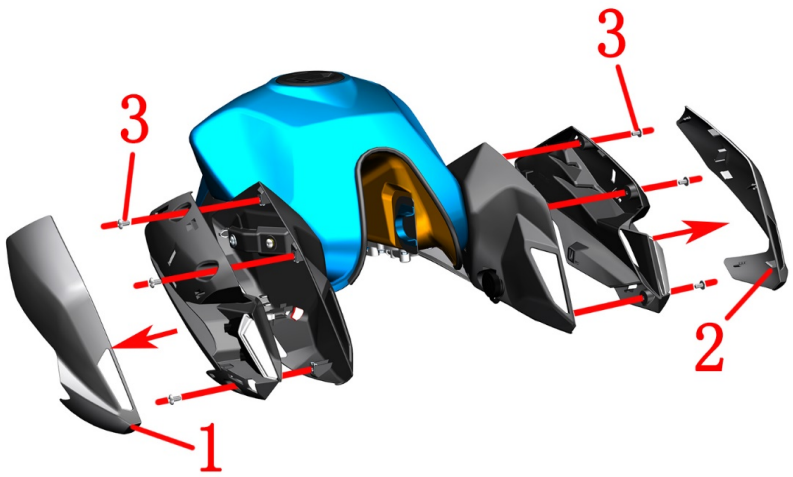

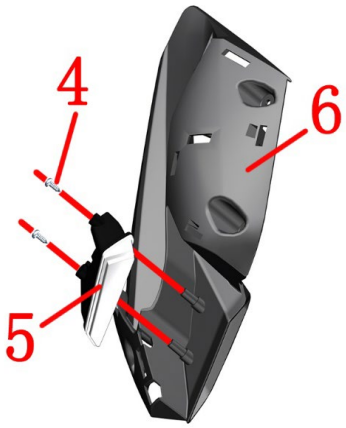

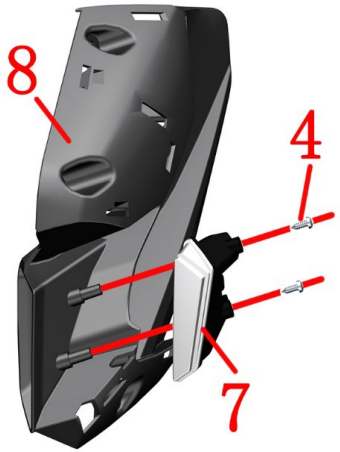

Fig.2 FUEL TANK COMPONENT		Fuel tank cover component 1	CHK ADJ	
NO.	PART NO.	PART NAME	QTY	CAUTION
1		ZT155－Z2 dark gray fuel tank left decorative cover	1	
2		ZT155－Z2 dark gray fuel tank right decorative cover	1	
3	1251100-101000	Non-standard bolt M6×12 (304 stainless steel)	6	
4	1250204-031093	GB845St4.2×12 (environmental color)	4	
5	1170300-100000	SK150-Z front left turn signal	1	
6	1220300-142000	SK150-Z fuel tank left decorative cover inner panel	1	
7	1170300-101000	SK150-Z front right turn signal	1	
8	1220300-144000	SK150-Z fuel tank right decorative cover inner panel	1	

PROCEDURE:

●Fuel tank decoration cover assembly

Pry the left decorative cover (1) and right decorative cover (2) to the direction of the arrow and take it out with sharp objects such as a word batch. (The buckles here are all inverted buckles, please remove them carefully. Do not use excessive force to damage the buckles.)

Use 4# inner hexagon to remove 6 bolts (3), and remove left inner plate (6) and right inner plate (8).

Remove the self-tapping nail (4) fixed on the left bottom plate (6) with a cross-shaped screw, and remove the left turn signal (5). Use the same method to remove the right turn signal (7).

CAUTION:

●When removing the buckle, pay attention to the strength to prevent damage to the buckle.

●The parts should be protected during the disassembly process to prevent damage to the paint surface.

●When reinstalling, make sure that the self-tapping screws should be vertical to the mounting surface before tightening, and the torque should not be too large.

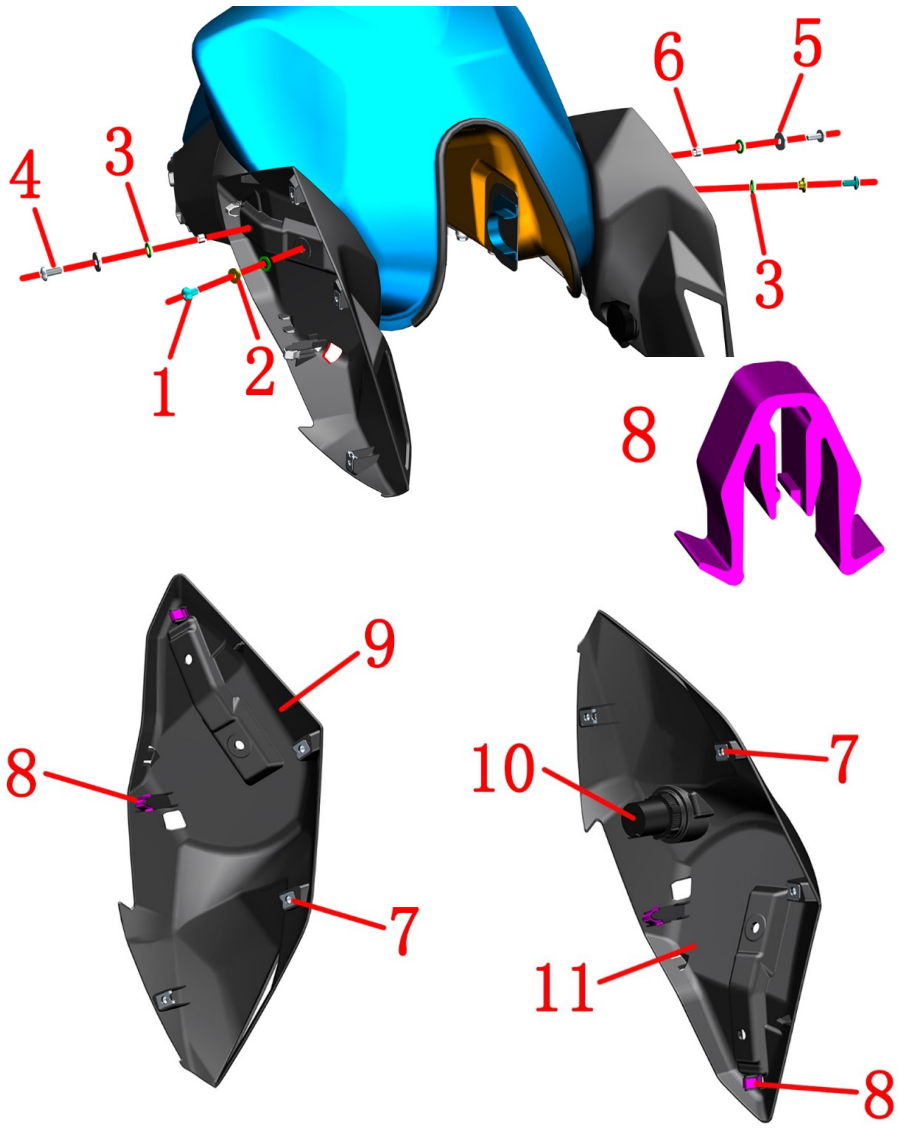

Fig.3 FUEL TANK COMPONENT		Fuel tank cover component 2	CHK ADJ	
NO.	PART NO.	PART NAME	QTY	CAUTION
1	1251100-101000	Non-standard bolt M6×12 (304 stainless steel)	2	
2	1274100-057095	Flanging bushing φ6.2×φ8.5×3.5＋φ14×1.5	2	
3	1244100-052000	Buffer rubber of flanging bushing （φ8.5×φ14×1）	4	
4	1251100-102000	Non-standard bolt M6×16（304 stainless steel）	2	
5	1250502-010093	GB96.1φ6（color zinc）	2	
6	1274100-018000	ZT250－S anti-hot plate sleeve muffler	2	
7	1251300-063093	Plywood M6×11×15（color zinc）	6	
8	1224100-008000	ZT250－S snap joint	4	
9	1220300-147000	SK150-Z fuel tank right decorative cover bottom plate	1	
10	1184200-100000	ZT310 dual USB charging cable	1	
11	1220300-146000	SK150-Z fuel tank left decorative cover bottom plate	1	

PROCEDURE:

●Fuel tank decoration cover assembly

Use 4# inner hexagon to remove 2 bolts (1), take off the bushing (2), cushion rubber (3).

Then use 4# inner hexagon to remove 2 bolts (4), remove gasket (5), cushion rubber (3), bushing (6).

Remove the left decorative bottom plate (11) and the right decorative bottom plate (9), and remove the 6 splints (7) and 4 buckles (8) on the top.

Rotate the fixed thread on the front of the USB charging port (10) counterclockwise, and remove the USB charging port (10)

CAUTION:

●The parts should be protected during the disassembly process to prevent damage to the paint surface.

●When removing the buckle, pay attention to the strength to prevent damage to the buckle.

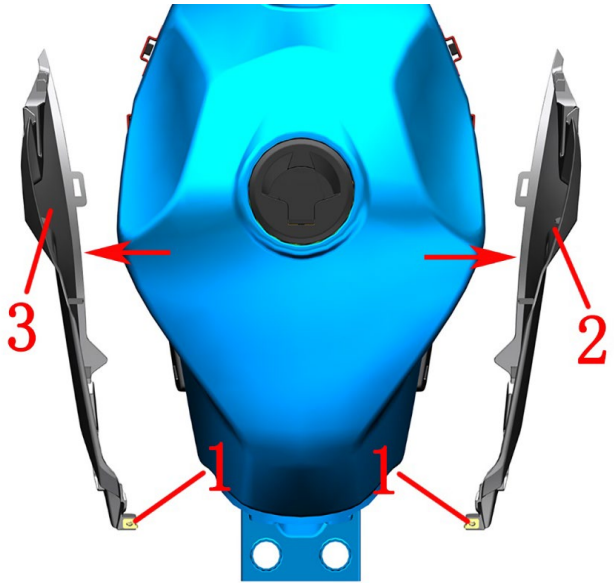

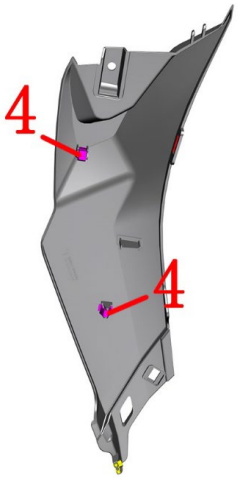

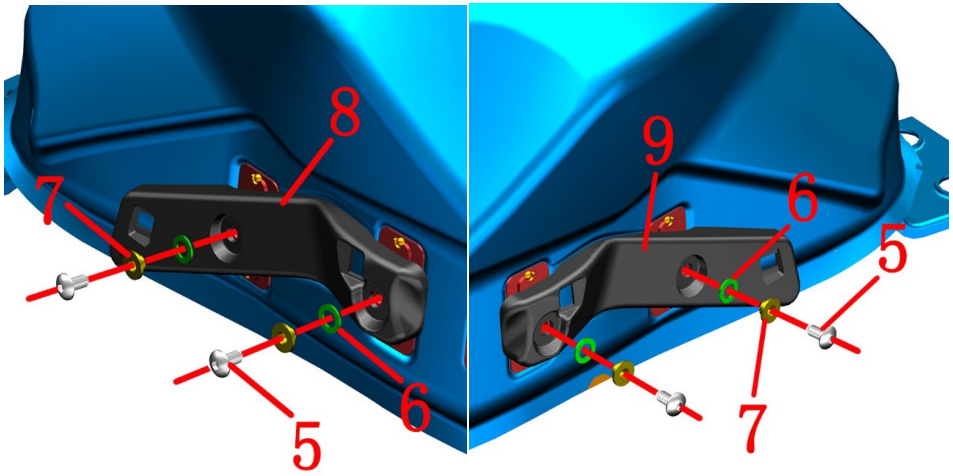

Fig.4 FUEL TANK COMPONENT		Fuel tank cover component 3	CHK ADJ	
NO.	PART NO.	PART NAME	QTY	CAUTION
1	1251300-063093	Plywood M6×11×15（color zinc）	2	
2	4041201-155051	KD150-Z2 dark gray front right cover (high light)	1	
3	4041201-154051	KD150-Z2 dark gray front left side cover (high light)	1	
4	1224100-008000	ZT250－S snap joint	4	
5	1251100-101000	Non-standard bolt M6×12 (304 stainless steel)	4	
6	1244100-052000	Buffer rubber of flanging bushing （φ8.5×φ14×1）	4	
7	1274100-057095	Flanging bushing φ6.2×φ8.5×3.5＋φ14×1.5	4	
8	1220300-150000	SK150-Z fuel tank right bottom plate	1	
9	1220300-149000	SK150-Z fuel tank left bottom plate	1	

PROCEDURE:

●Side cover front assembly

Take the front part of the left side cover (3) and the front part of the right side cover (2) out in the direction of the arrow, and remove the 2 splints (1) and 4 buckles (4).

Remove the 4 bolts (5) fixing the left bottom plate (9) and the right bottom plate (8) with a 4# inner hexagon, and remove the bushing (7) and cushion rubber (6).

CAUTION:

●The parts should be protected during the disassembly process to prevent damage to the paint surface.

●When removing the buckle, pay attention to the strength to prevent damage to the buckle.

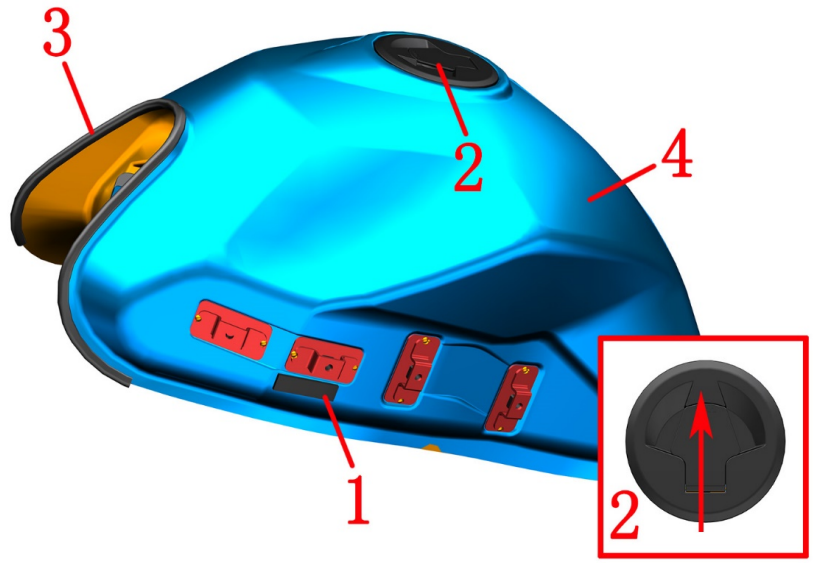

Fig.5 FUEL TANK COMPONENT		Fuel tank component	CHK ADJ	
NO.	PART NO.	PART NAME	QTY	CAUTION
1	1240300-066000	KD250-J head cover pad	1	
2	1181200-101000	KD150－G1 lock set	1	
3	1240300-021000	HJ125－6 pod glass strip (1.5m)	0.33	500mm
4		ZT155-Z2 fuel tank	1	
5	1250105-137093	GB5789M6×16（color zinc）	8	
6	1050954-031000	T02 built-in fuel pump - ZT310T	1	

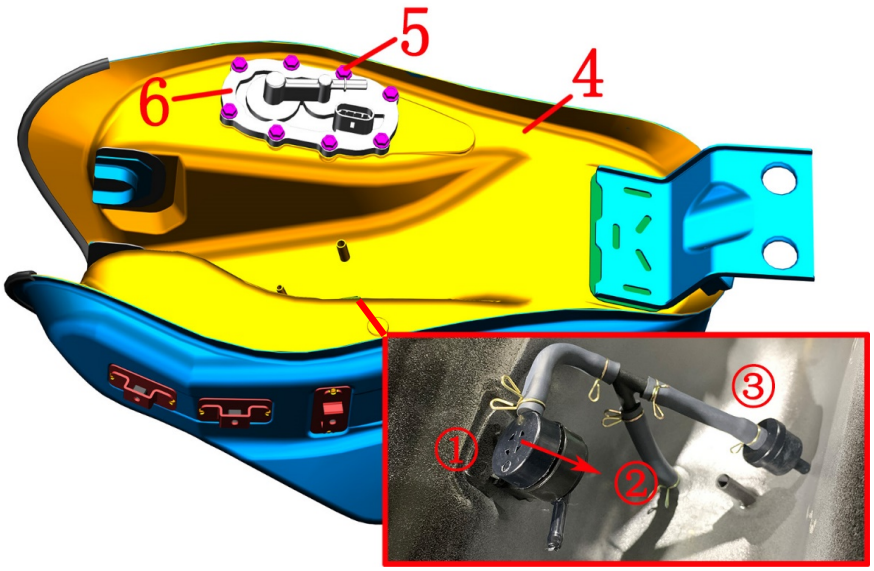

PROCEDURE:

●Fuel tank sub-assembly

Remove the rubber strip (4) from the fuel tank (3)、head cover pad(1).

Use the key to remove the fuel tank cover lock (3).（The direction indicated by the arrow is the front of the bike. Do not install the fuel tank lock backwards, otherwise the fuel tank will be damaged.）

Turn the fuel tank over, remove the dump valve ① at the bottom in the direction of the arrow, and then remove the fuel pipe ② connecting the fuel tank.The check valve ③ is not connected to any part of the fuel tank.

CAUTION:

●The parts should be protected during the disassembly process to prevent damage to the paint surface.

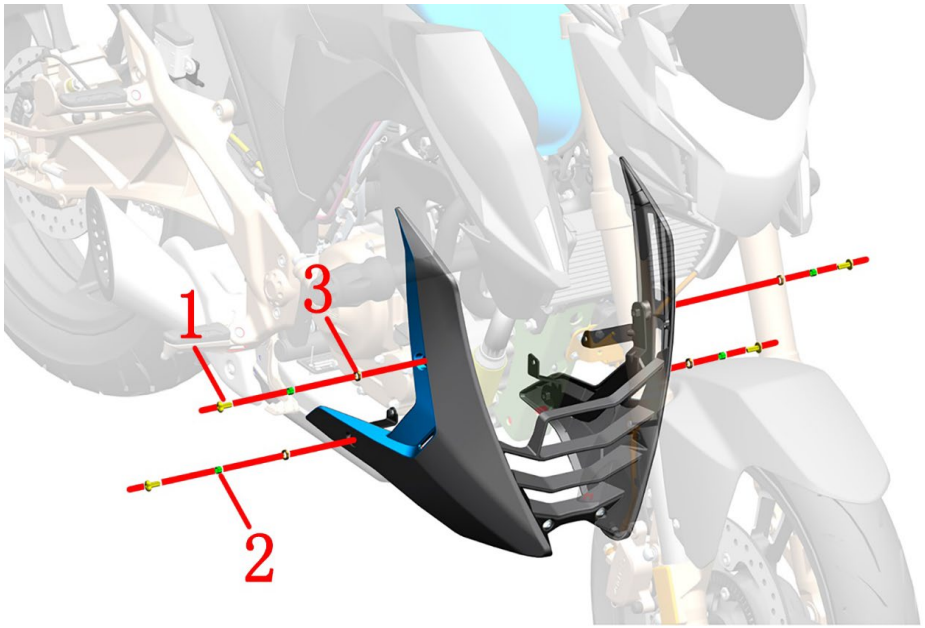

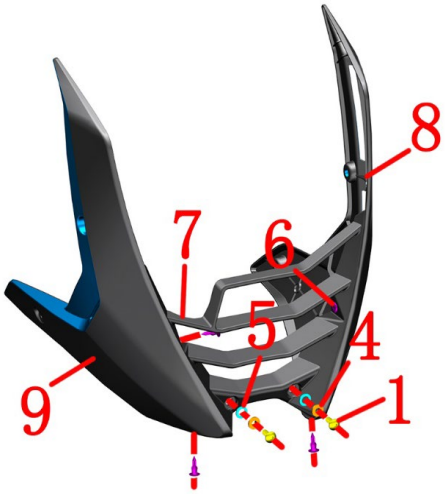

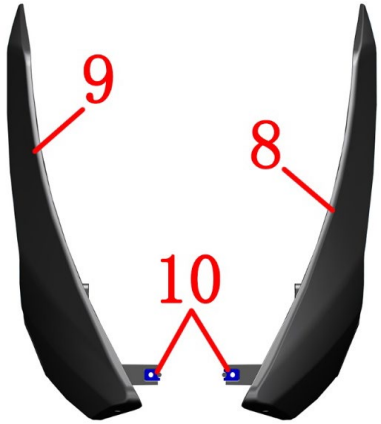

Fig.1 SURROUNDING COMPONENT		Surrounding component	CHK / ADJ	
NO.	PART NO.	PART NAME	QTY	CAUTION
1	1251100-102000	Non-standard bolt M6×16（304 stainless steel）	6	
2	1274100-018000	ZT250－S anti-hot plate sleeve muffler	4	
3	1244100-037000	φ12×φ8.5×2.5 circle buffer glue	4	
4	1274100-057095	Flanging bushing φ6.2×φ8.5×3.5＋φ14×1.5	2	
5	1244100-052000	Buffer rubber of flanging bushing （φ8.5×φ14×1）	2	
6	1224100-010000	ZT250－S swell nail	4	
7	1221200-090000	KD150－Z2 middle of the lower shroud	1	
8		ZT155－Z2 lower fairing left part	1	
9		ZT155－Z2 lower right part of the fairing	1	
10	1251300-063093	Plywood M6×11×15（color zinc）	2	

PROCEDURE:

●Surrounding components

Use 4# inner hexagon to remove the 4 bolts (1) that surround the component, remove the bushing (2), cushion rubber (3), then the surrounding component can be removed.

Use a 4# inner hexagon to remove the 2 bolts (1) on the middle part (7) of the air deflector, remove the bushing (4), cushion rubber (5), take out 4 expansion nails (6), and remove the middle part (7) of the air deflector.

Remove 2 pieces of splints (10) from the left part (8) of the air deflector and the right part (9) of the air deflector.

CAUTION:

●If you need to remove the surrounding bracket, please refer to the steps of "Frame & Engine Combination 2".

●The parts should be protected during the disassembly process.

●When removing the buckle, pay attention to the strength to prevent damage to the buckle.

●Figure a is the unmounted state; Figure b is the assembled state; Figure c is the disassembled state.



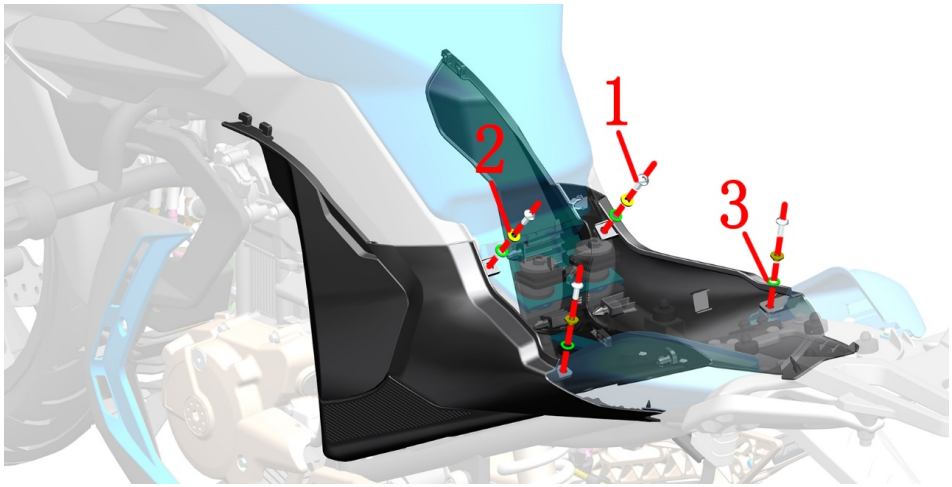

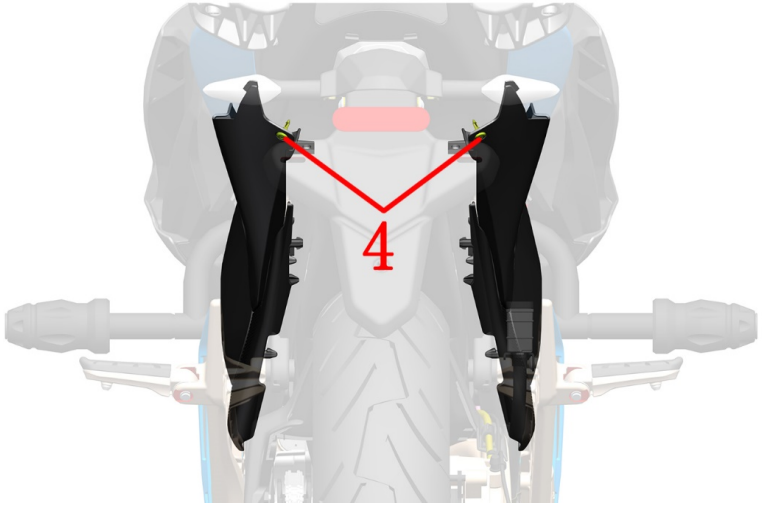

Fig.1 SIDE COVER COMPONENT		Side cover component 1	CHK ADJ	
NO.	PART NO.	PART NAME	QTY	CAUTION
1	1251100-102000	Non-standard bolt M6×16（304 stainless steel）	4	
2	1274100-057095	Flanging bushing φ6.2×φ8.5×3.5＋φ14×1.5	4	
3	1244100-052000	Buffer rubber of flanging bushing （φ8.5×φ14×1）	4	
4	1224100-010000	ZT250－S swell nail	2	

PROCEDURE:

●Side cover assembly

Use 4# inner hexagon to remove 4 bolts (1), take off the bushing (2) and cushion rubber (3). Remove the 2 expansion nails at the back of the side cover assembly.

CAUTION:

●The parts should be protected during the disassembly process.

●When removing the buckle, pay attention to the strength to prevent damage to the buckle.

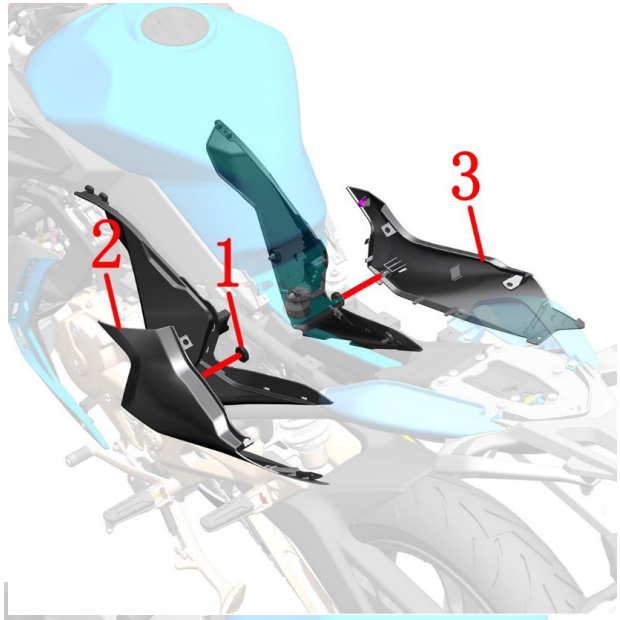



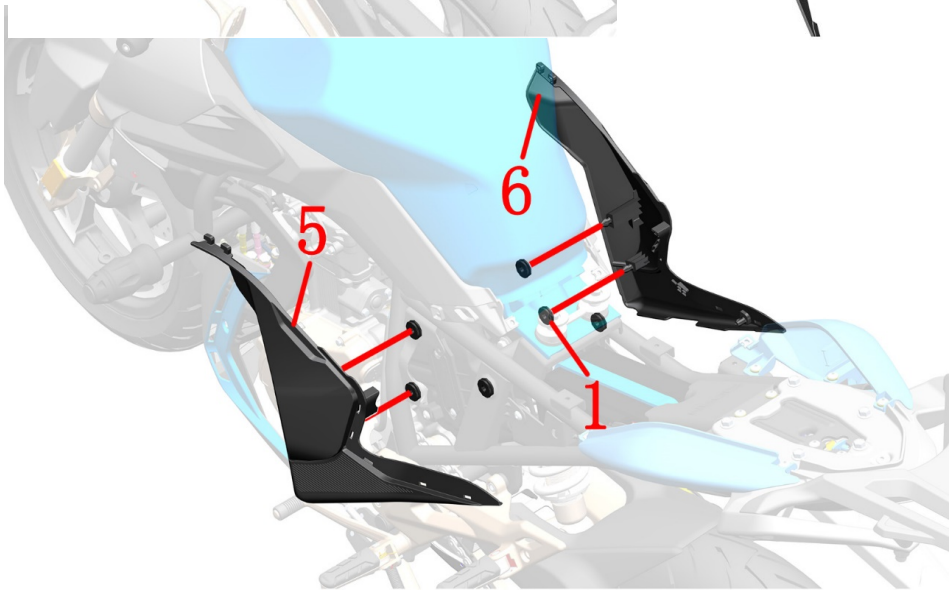

Fig.2 SIDE COVER COMPONENT		Side cover component 2	CHK ADJ	
NO.	PART NO.	PART NAME	QTY	CAUTION
1	1244100-002000	ZT250－S Side cover round rubber	6	
2		ZT155－Z2 dark gray left side cover rear	1	
3		ZT155－Z2 dark gray right side cover rear	1	
4	1224100-008000	ZT250－S snap joint	2	
5	1221200-091000	KD150－Z2 left cover bottom plate	1	
6	1221200-092000	KD150－Z2 right cover bottom plate	1	

PROCEDURE:

●Side cover assembly

Pull out the rear part of the left side cover (2) and the rear part of the right side cover (3) from the frame, and remove the 2 buckles on the rear of the side cover.

Then pull out the left side cover bottom plate (5) and the right side cover bottom plate (6) from the frame.

CAUTION:

●The parts should be protected during the disassembly process.

●When removing the buckle, pay attention to the strength to prevent damage to the buckle.

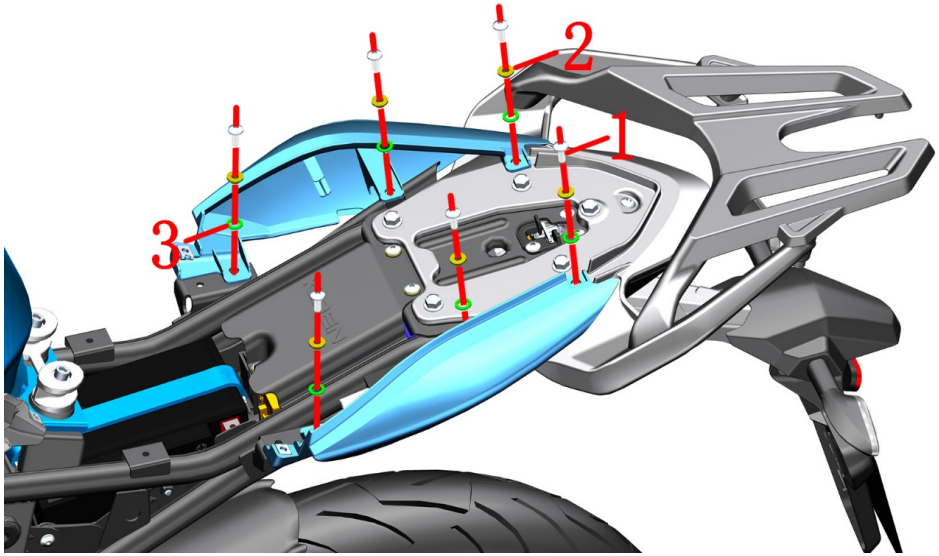

Fig.1 REAR COVER COMPONENT		Rear cover components	CHK ADJ	
NO.	PART NO.	PART NAME	QTY	CAUTION
1	1251100-102000	Non-standard bolt M6×16（304 stainless steel）	6	
2	1274100-057095	Flanging bushing φ6.2×φ8.5×3.5＋φ14×1.5	6	
3	1244100-052000	Buffer rubber of flanging bushing （φ8.5×φ14×1）	6	
4	1251300-063093	Plywood M6×11×15（color zinc）	2	
5		KD150－Z2 rear cover right	1	
6		KD150－Z2 rear cover left	1	

PROCEDURE:

●Rear cover components

Remove the 6 bolts (1) with 4# inner hexagon, and take out the bushing (2) and the cushion rubber (3). Remove the left part of the rear cover (5), the right part (6) of the rear cover from the motorcycle, and then remove the 2 pieces of clip (4) from the rear cover.

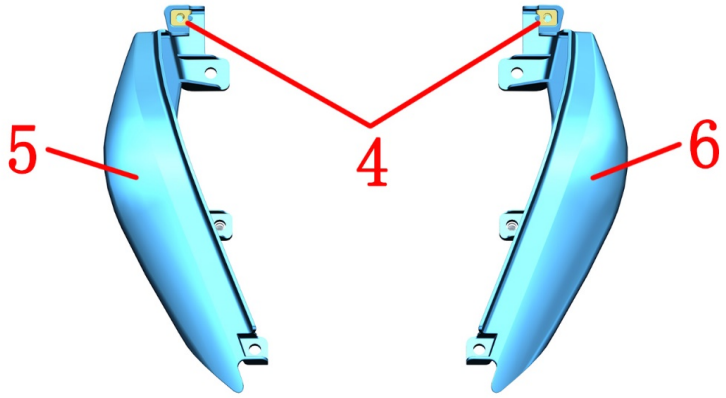

CAUTION:

●The cushion,side cover assembly need to be removed in advance.

●The parts should be protected during the disassembly process.

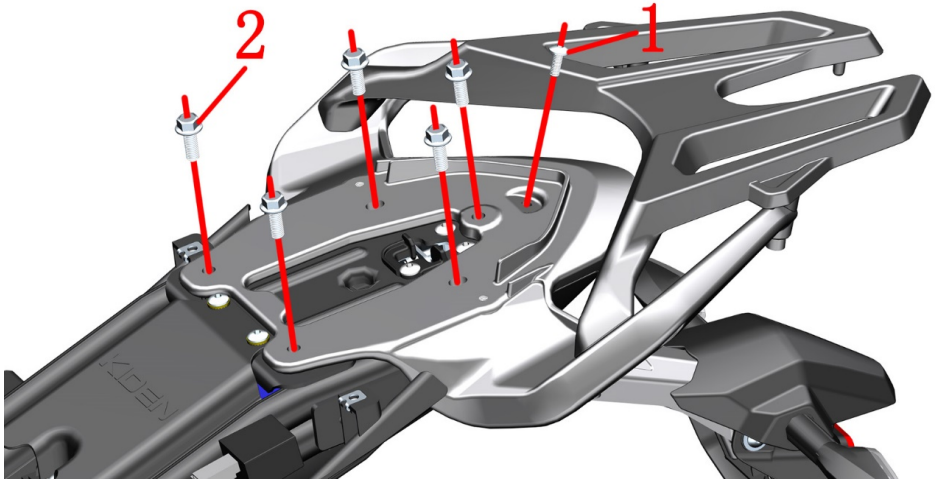

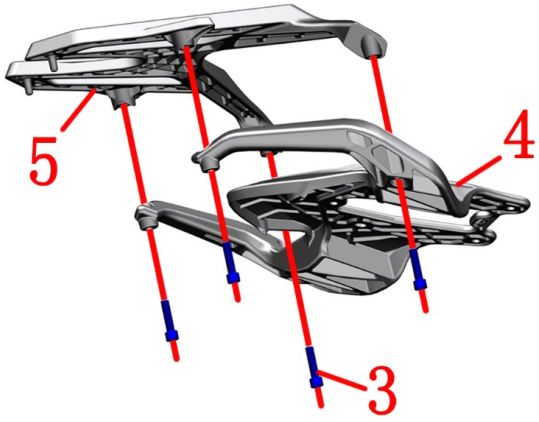

Fig.2 REAR COVER COMPONENT		Rear armrests and shelf components	CHK ADJ	
NO.	PART NO.	PART NAME	QTY	CAUTION
1	1251100-102000	Non-standard bolt M6×16（304 stainless steel）	1	
2	1250105-142093	GB5789M8×20（color zinc）	5	
3	1250205-002091	GB70.1 M8×30(zinc)	4	
4	4111200-012051	KD150-Z2 rear armrest (dark gray matte)	1	
5	4111100-002051	SK150-Z rack (dark gray matte)	1	

PROCEDURE:

●Rear armrests and shelf components

Remove one bolt (1) with 4# inner hexagon.

Use a 12# sleeve to remove 5 bolts (2).

Remove the rear armrest (4) and the shelf (5) from the motorcycle, and remove the 4 bolts (3) with 6# inner hexagon.

CAUTION:

●The cushion, side cover assembly,rear cover components need to be removed in advance.

●The parts should be protected during the disassembly process.

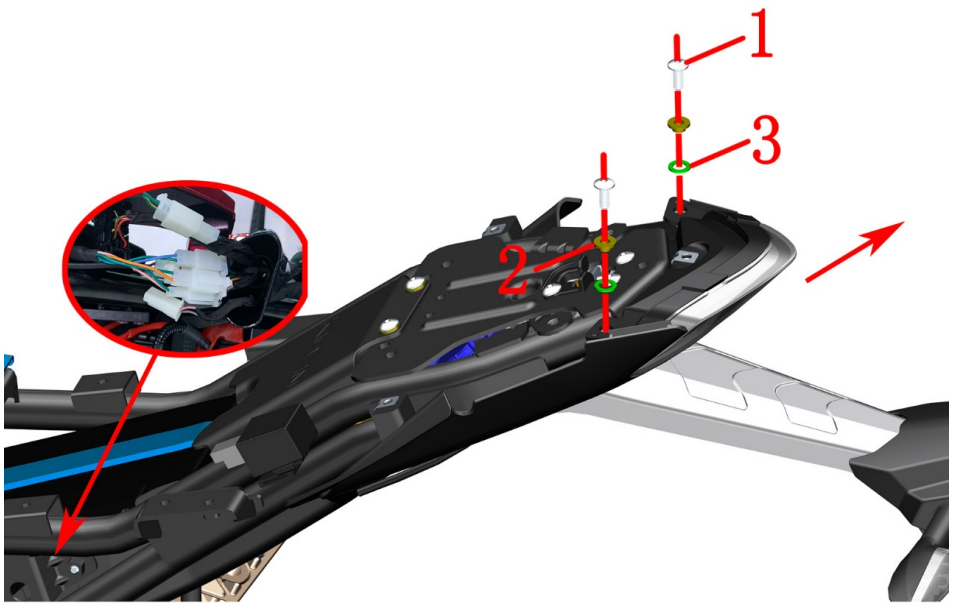

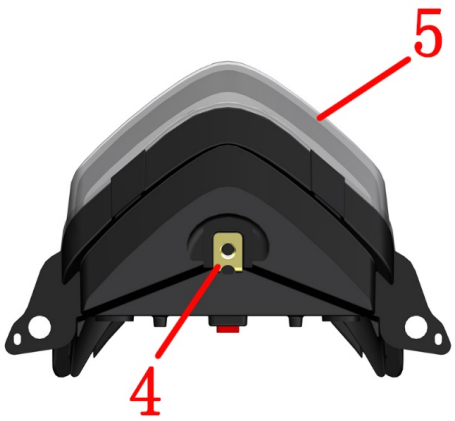

Fig.3 REAR COVER COMPONENT		Taillight component	CHK ADJ	
NO.	PART NO.	PART NAME	QTY	CAUTION
1	1251100-102000	Non-standard bolt M6×16（304 stainless steel）	2	
2	1274100-057095	Flanging bushing φ6.2×φ8.5×3.5＋φ14×1.5	2	
3	1244100-052000	Buffer rubber of flanging bushing （φ8.5×φ14×1）	2	
4	1251300-063093	Plywood M6×11×15（color zinc）	1	
5	1171200-062000	KD150－Z2 tail light	1	

PROCEDURE:

●Taillight assembly

Use 4# inner hexagon to remove 2 bolts (1), take off the bushing (2), cushion rubber (3).

Locate and unplug the tail light connector at the position indicated by the arrow, remove the tail light (5) in the direction of the arrow, and remove the splint (4) on the tail light.

CAUTION:

●The side cover, seat cushion, rear armrest and other components need to be removed in advance.

●The material should be protected during discomponent to prevent scratching the lamp.

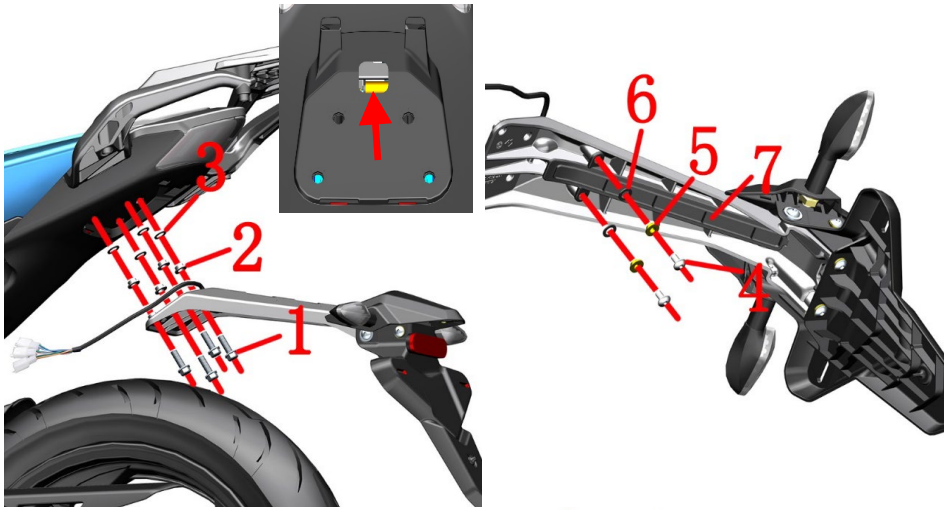

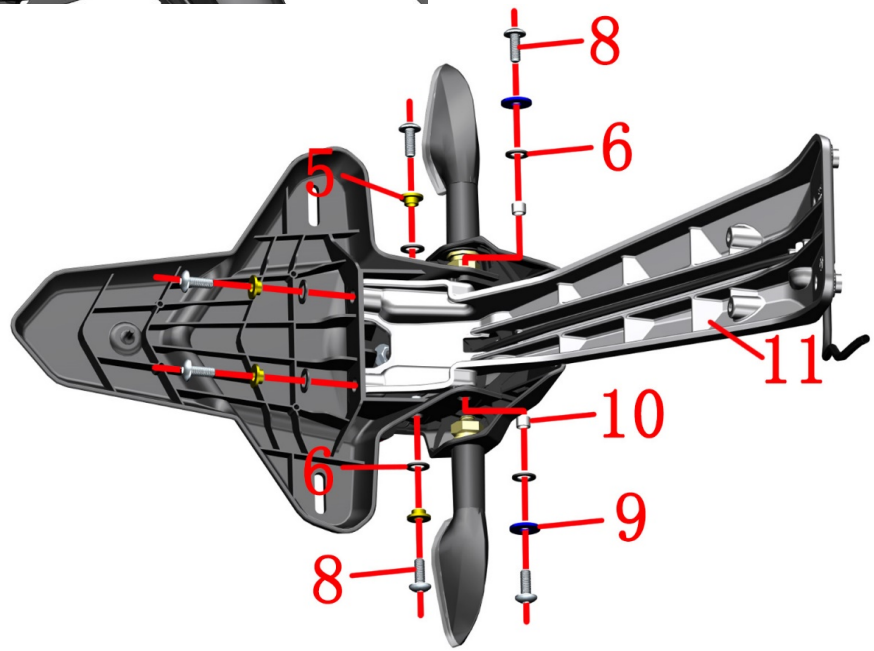

Fig.4 REAR COVER COMPONENT		Rear mud board component 1	CHK ADJ	
NO.	PART NO.	PART NAME	QTY	CAUTION
1	1250105-148093	GB5789M8×25(color zinc)	4	
2	1251700-058093	Flanging bushing φ8.2×φ11×4.5＋φ16×1.5(color zinc)	4	
3	1240300-071000	Flanging bushing rubber (φ11×φ16×1)	4	
4	1251100-101000	Non－standard bolt M6×12 (304 stainless steel)	2	
5	1274100-057095	Flanging bushing φ6.2×φ8.5×3.5＋φ14×1.5	6	
6	1244100-052000	Buffer rubber of flanging bushing (φ8.5×φ14×1)	8	
7	1221200-052000	KD150－U rear fender bracket cover	1	
8	1251100-120093	Non－standard bolts M6×16 (environmental color)	6	
9	1250502-010093	GB96.1φ6(color zinc)	2	
10	1274100-018000	ZT250－S anti－hot plate sleeve, muffler	2	
11	4021200-045051	KD150－U rear fender bracket (dark gray matte)	1	

PROCEDURE:

●Rear mud board component

Remove the seat cushion.

Find the 3 plugs of the adapter cable on the left and unplug them.（The patch cord plug and the tail light plug are in the same rubber sleeve.）

Grasp the rear fender assembly and use a 12# sleeve to remove the 4 bolts (1), and remove the bushing (2) and the cushion rubber (3).

Pull down the bottom of the rear cover for a certain distance, and then pull the plug of the adapter cable out of the small hole pointed by the arrow. Remove the rear fender assembly from the bike and put it away.

●Cover

Use 4# inner hexagon to remove 2 bolts (4), then remove the bushing (5) and cushion rubber (6), and then remove the cover (7). Pull the adapter cord plug out of the hole in the fender bracket.

●Rear fender sub-assembly

Use a 4# inner hexagon to remove the 2 bolts (8) at the bottom, and then remove the bushing (5) and cushion rubber (6).

Use 4# inner hexagon to remove the bolts (8) on both sides of the back of the turn signal, and remove the gasket (9), cushion rubber (6) and anti-scalding board bushing (10).

Use a 4# inner hexagon to remove the 2 bolts (8) on both sides of the turn signal light-emitting surface, and then remove the bush (5) and the cushion rubber (6).

Separate the rear mud plate sub-assembly, turn signal bracket assembly and rear mud guard bracket.

CAUTION:

●When reassembling, check if there is any pressure on the wire to prevent it from tightening.Short circuit caused by bolts.

●Pay attention to the force when pulling out the connecetor plug.

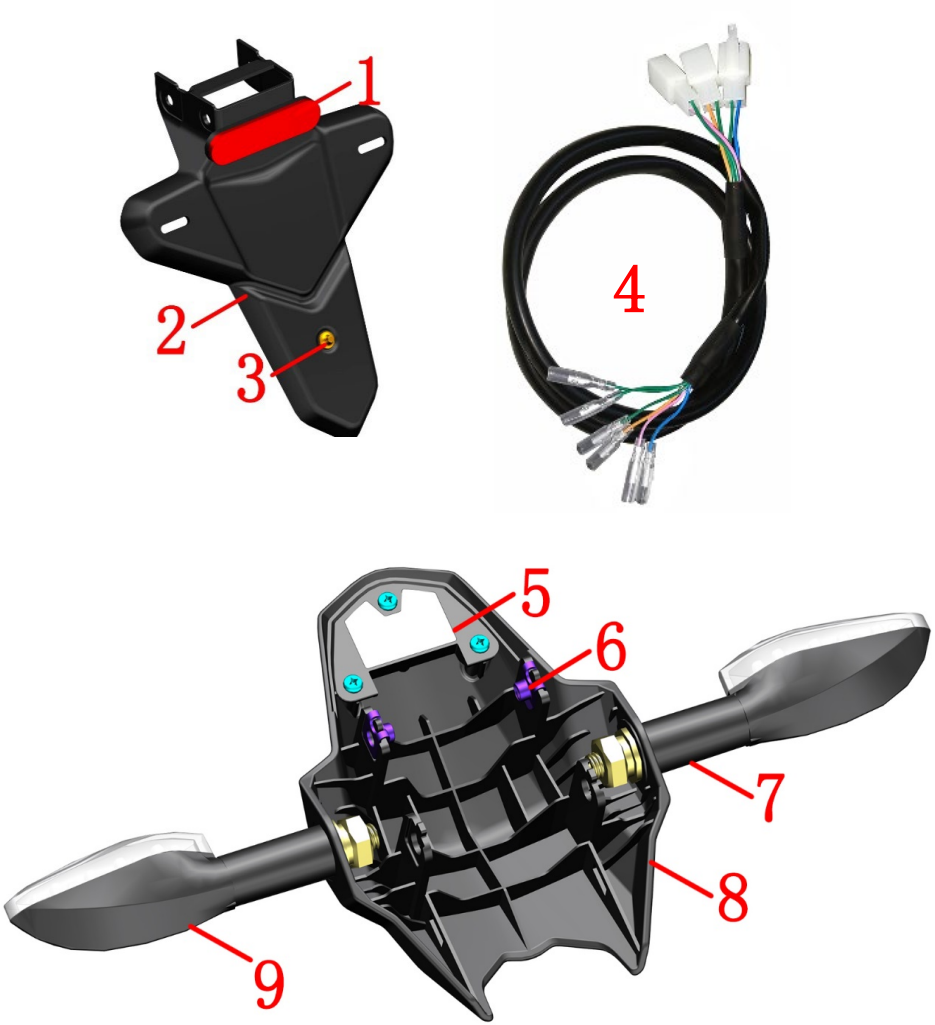

Fig.5 REAR COVER COMPONENT		Rear mud board component 2	CHK ADJ	
NO.	PART NO.	PART NAME	QTY	CAUTION
1	1174100-002000	ZT250－S rear reflector	1	
2	1221200-051000	KD150－U rear fender plate	1	
3	1244100-006000	ZT250－S rear liceness rubber buffer	1	
4	1181200-103000	KD150－U auxiliary mud plate transfer line（short）	1	
5	1171200-057000	KD150－U license plate light	1	
6	1251300-063093	Plywood M6×11×15(color zinc)	2	
7	1170300-064000	HJ125－K front right turn signal light	1	
8	1221200-053000	KD150－U rear turn signal bracket	1	
9	1170300-063000	HJ125－K front left turn signal light	1	

PROCEDURE:

●Rear fender

Remove the nuts and washers that come with the rear reflector (1) and then remove the reflector. Remove the license plate buffer glue (3) from the rear fender (2).

●Turn signal light assembly

Unplug all the connectors of the turn signal and the license plate light and remove the auxiliary fender adapter cable (4).

Remove the 2 pieces of nuts (6) from the turn signal bracket (8).

Remove the 3 screws that come with the license plate light, and then remove the license plate light (5).

Grasp the left (right) turn signal and use a 17# open-end wrench to remove the nut that comes with the turn signal, remove the spring washer and gasket that comes with it, and then remove the turn signal.

CAUTION:

●Do not pull the cable hard when removing the sub-mud switch.

●When reassembling, check if there is any pressure on the wire to prevent it from tightening.Short circuit caused by bolts. Pay attention to the lamp connector, do not insert the wrong, turn left
Green + orange; right turn signal is green + blue; license plate light is green + pink.

●When assembling self-tapping screws come with the license plate light, it must be perpendicular to mounting surface, otherwise it will bedamaged,and the torque should not be too large.

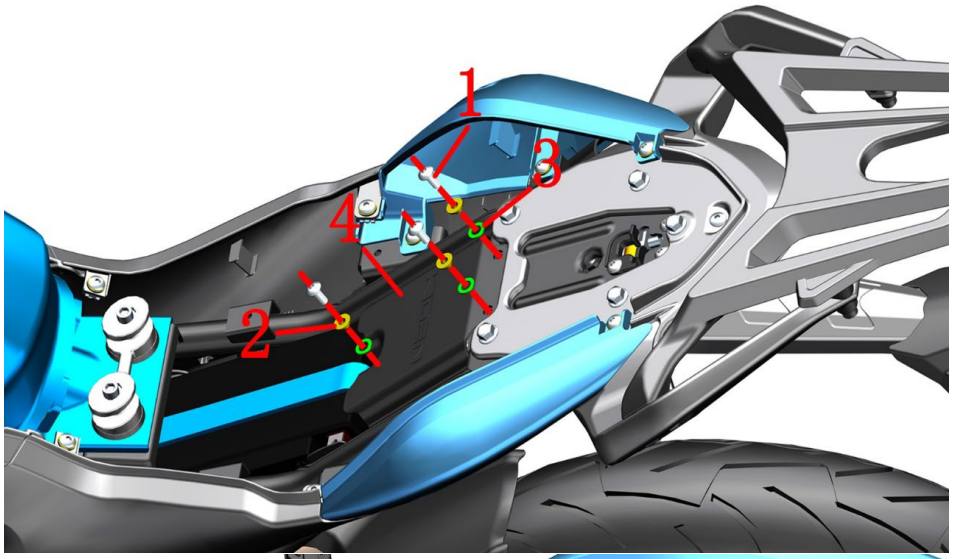

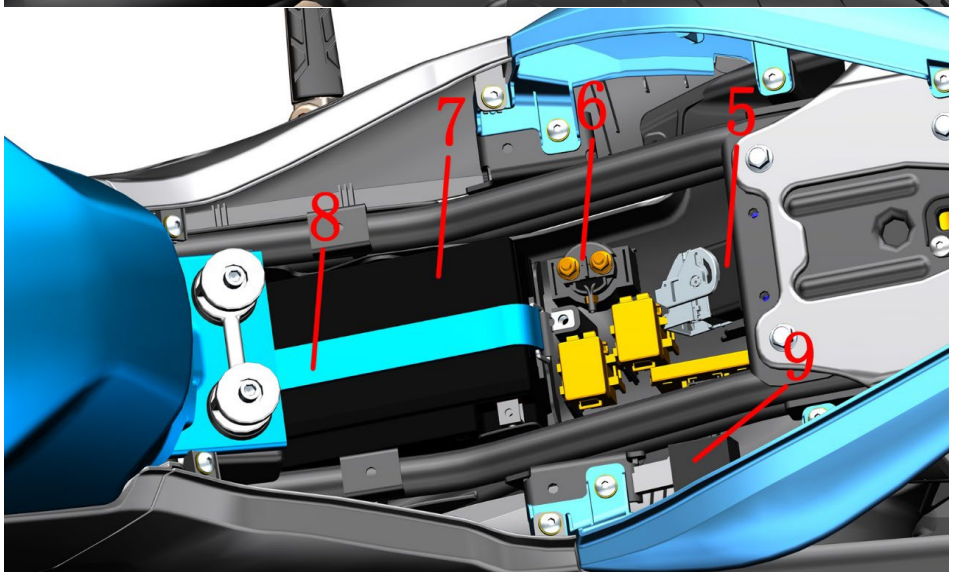

Fig.6 REAR COVER COMPONENT		Battery pack	CHK ADJ	
NO.	PART NO.	PART NAME	QTY	CAUTION
1	1251100-102000	Non-standard bolt M6×16（304 stainless steel）	3	
2	1274100-057095	Flanging bushing φ6.2×φ8.5×3.5＋φ14×1.5	3	
3	1244100-052000	Buffer rubber of flanging bushing （φ8.5×φ14×1）	3	
4	1221200-109000	KD150－Z2 electric device box upper cover	1	
5		MSE6.0 controller	1	ECU
6	1184100-010000	ZT250－S starting relay	1	
7	1184200-099000	ZT310 colloid battery (6-FM-10/10Ah)	1	
8	1244200-111000	ZT310 gel battery strap	1	
9	1184100-017000	ZT250－S fuel-injection relay	1	

PROCEDURE:

●The upper cover of the electrical device box

Use 4# inner hexagon to remove 3 bolts (1), take off the flange bushing (2), cushion rubber (3), and take out the upper cover of the electrical device box (4).

●Gel battery assembly

First take out the end of the battery strap (8) close to the positive electrode, then pull up the gel battery (7) and fix it, pull off the black protective cap to remove the negative electrode; then pull off the red protective cap to remove the positive electrode; remove the battery; finally tie the battery Take (8) off. When reinstalling, you should first buckle the buckle at the negative end of the battery strap (8), and then install the battery; when installing the battery, you should connect the positive pole first, then the negative pole; finally, buckle the battery strap (8).

CAUTION:

●Protect protective measures to prevent scratching the appearance of parts.

●When reassembling, check whether there is any pressure on the wire to prevent short circuit when tightening the bolt.

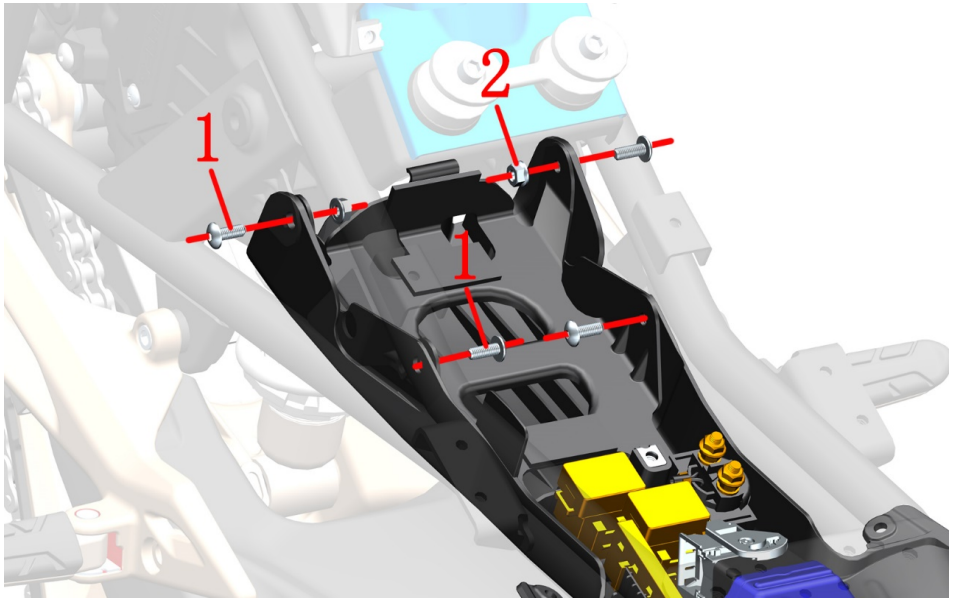

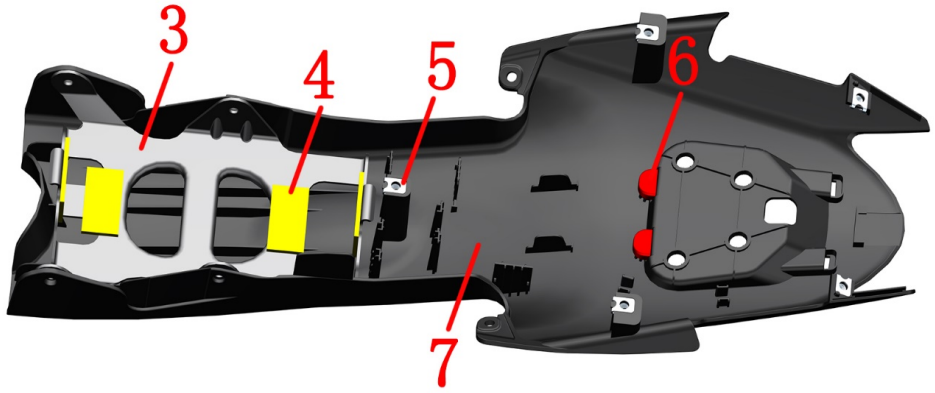

Fig.8 REAR COVER COMPONENT		Electrical device box component	CHK ADJ	
NO.	PART NO.	PART NAME	QTY	CAUTION
1	1251100-102000	Non-standard bolt M6×16（304 stainless steel）	4	
2	1250303-010093	GB6177.1M6（color zinc ）	2	
3	1271200-144000	KD150－G1 battery holder (gel battery)	1	
4	1240300-007000	HJ125－6 Battery rubber gasket	4	
5	1251300-063093	Plywood M6×11×15（color zinc）	5	
6	1244200-087000	ZT310-X tail skirt middle waterproof rubber stopper	2	
7	1221200-094000	KD150－Z2 bottom of tail group	1	

PROCEDURE:

●Rear cover bottom assembly

Remove bolt (2) and nut (1) with 4# inner hexagon and 10# torx wrench.

Pull out the fuse box and the starting relay from the bottom of the rear cover without removing it; the ECU plug does not need to be pulled out.you can pull down the entire rear cover and remove the entire rear skirt.

Take out the battery holder (3) from the rear cover (7). The battery rubber pad (4) is a double-sided tape pasted on the battery holder (3).

Remove the splint (5) and the waterproof rubber plug (6).

CAUTION:

●The patch cord plug and the tail light plug are in the same rubber sleeve.

●Protect protective measures to prevent scratching the appearance of parts.

●When reassembling, check whether there is any pressure on the wire to prevent short circuit when tightening the bolt.

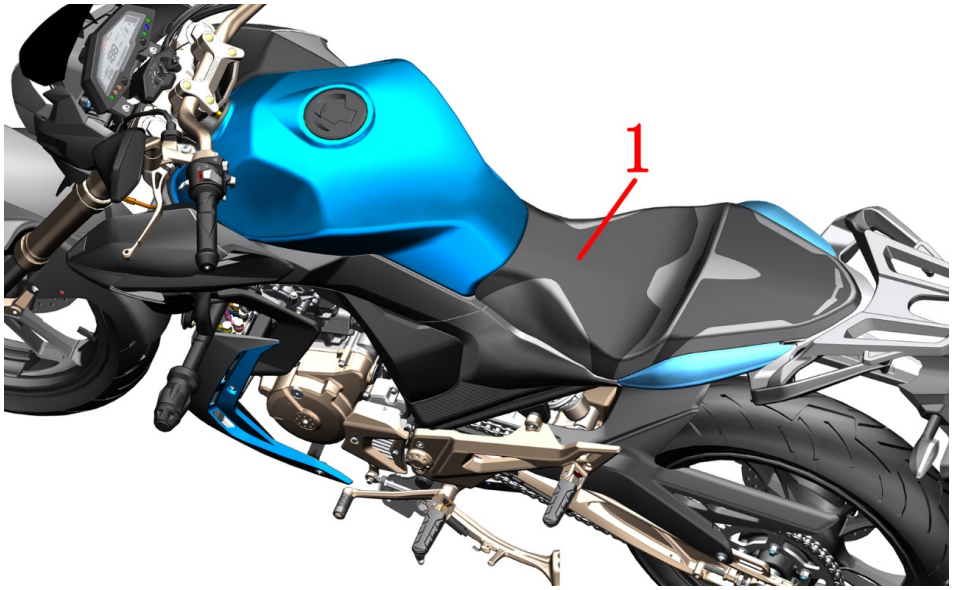

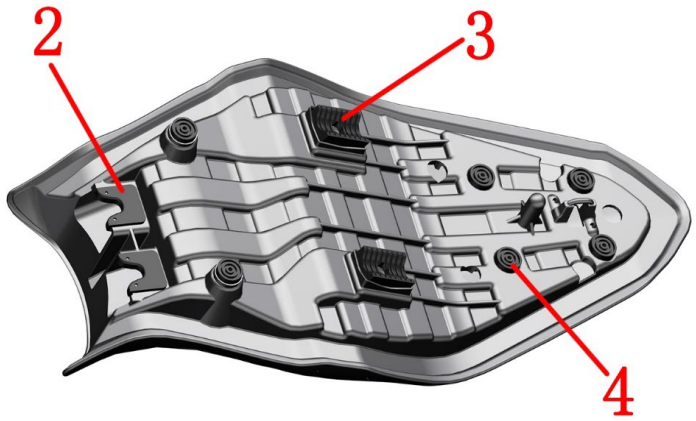

Fig.1 CUSHION COMPONENT		Cushion component	CHK ADJ	
NO.	PART NO.	PART NAME	QTY	REMARKS
1	4120100-001000	150-Z2 cushion	1	
2	1244100-024000	ZT250－S cushion front rubber	2	
3	1244100-022000	ZT250－S cushion rubber	2	
4	1244100-025000	ZT250－S round cushion rubber	6	

PROCEDURE:

●Remove the cushion

Insert the key, turn it counterclockwise, and take off the cushion when you hear a "click".

●Assembly cushion

When assembling the cushion, check whether all the cushion rubbers are complete. Insert the front part of the cushion first. After the assembly is in place, shoot the rear part of the cushion firmly. When you hear the "click" sound, it indicates that the cushion lock has been assembled.

●Cushion rubber purchased separately

The corresponding installation position is shown in the lower left figure.

CAUTION:

●The motorcycle should be fixed before operation.

●Cushion can cause accidents if it is not installed properly.

矾 矾

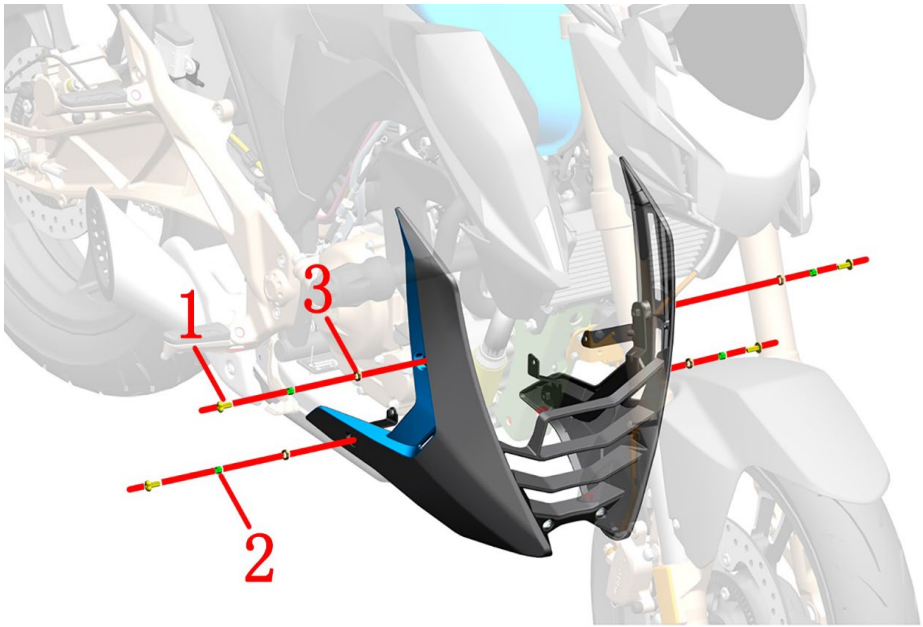

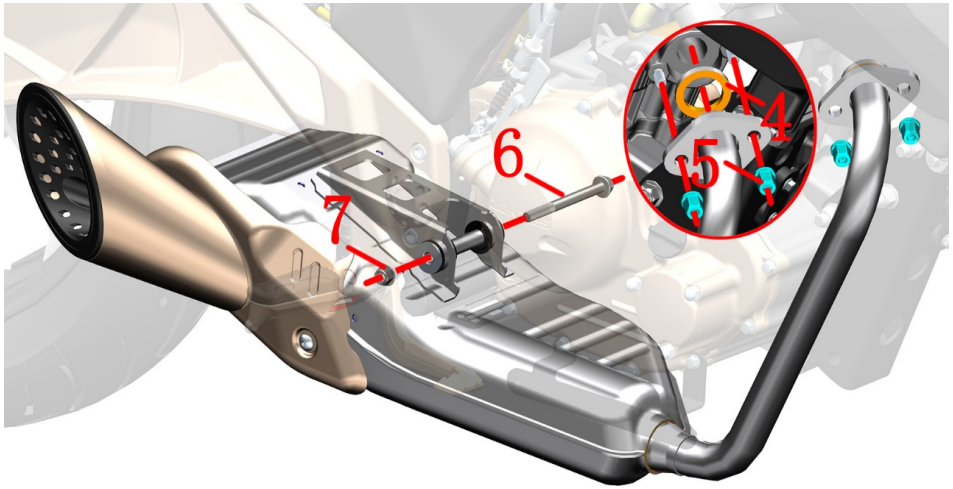

Fig.1 MUFFLER COMPONENT		Muffler component 1	CHK ADJ	
NO.	PART NO.	PART NAME	QTY	CAUTION
1	1251100-102000	Non-standard bolt M6×16（304 stainless steel）	4	
2	1274100-057095	Flanging bushing φ6.2×φ8.5×3.5＋φ14×1.5	4	
3	1244100-052000	Buffer rubber of flanging bushing （φ8.5×φ14×1）	4	
4	1070100-202000	KD150-U engine exhaust seal pad	1	
5	1251300-058093	Hexagonal nut (color zinc)	2	
6	1250105-021091	GB5789 M8×90（White zinc）	1	
7	1250303-011093	GB6177.1 M8(environmental color)	1	

PROCEDURE:

●Remove the muffler componet

Use a 4# inner hexagon to remove the 4 bolts (1) surrounding the component, remove the flange bushing (2) and the cushion rubber (3), take out the surrounding component.

Using 12# sleeve fix the head of the bolt(6),using 13# ring spanner remove the nut(7),then take off the bolt(6). Hold the buffer component then use 6# inner hexagon socket or 12# sleeve remover the nut(5).

Hold the bottom of the fender return pressure package with one hand, and grab the flange at the exhauster to remove it. Wrap the flange with a rubber band or rope to prevent the flange from moving back and forth on the front elbow and causing scratches.

Take off the exhaust seal pad(4) from the exhaust.

CAUTION:

●The parts should be protected during disassembly to prevent damage to the paint.

●The muffler should be completely cooled before it is disassembled.

●Prevent foreign matter from entering the interior of the muffler.

●The muffler nozzle needs to be protected. If there is any deformation, it may cause air leakage.

●It is recommended that new seals be replaced each time the muffler front assembly is removed to prevent airleakage.

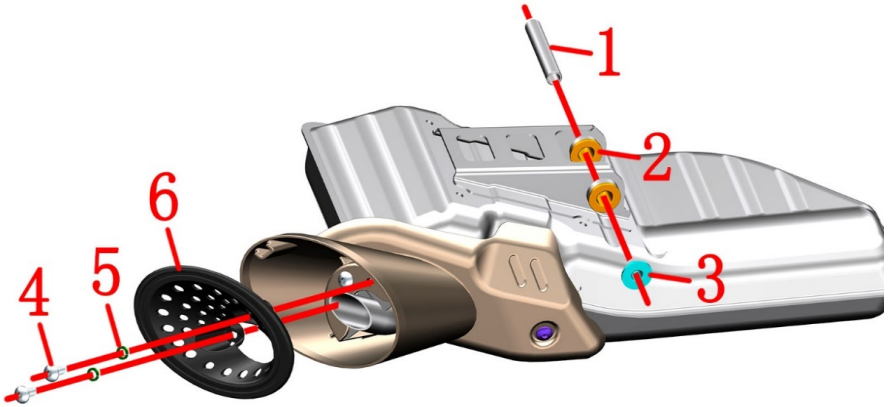

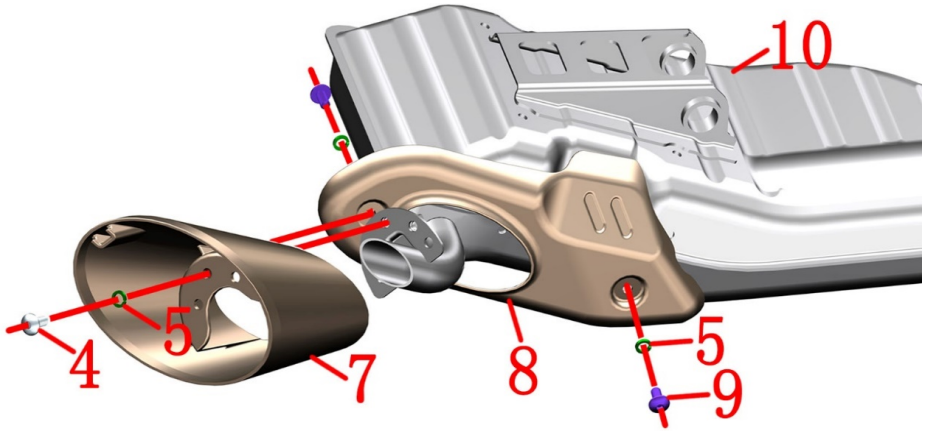

Fig.2 MUFFLER COMPONENT		Muffler component 2	CHK ADJ	
NO.	PART NO.	PART NAME	QTY	CAUTION
1	1251900-055093	KD150－U muffler suspension bushing	1	
2	1241200-045000	KD150－U muffler suspension cushioning rubber	2	
3	1274100-068095	ZT310 Muffler flanging bushing	1	
4	1251100-102000	Non－standard bolt M6×16(304 stainless steel)	3	
5	1250501-010000	GB93φ6 spring pad	5	
6	1032112-014000	KD150－U muffler tail cover rear	1	
7		KD150－U muffler tail cover front	1	
8		KD150－U muffler anti－scalding	1	
9	1251100-101000	Non-standard bolt M6×12 (304 stainless steel)	2	
10		KD150－U muffler	1	

PROCEDURE:

●Muffler componet

Take off the bushing(1)and bushing(3).

Take off 2pcs cushion rubbe(2) from the muffler(10).

Using 4# inner hexagon socket 2pcs bolts(4) fix the muffler tail cover rear(6),take off the spring pad(5),then remove the muffler tail cover rear(6).

On the back of the muffler anti－scalding(8) using 4# inner hexagon socket remove the bolt(9) fix the muffler tail cover front(7),take off the spring pad(5).

Grasp the muffler tail cover(7) then using 4# inner hexagon socket remove the bolt(4),take off the spring pad (5).Then take off the muffler tail cover(7).

Hold the muffler anti－scalding(8) by one hand,another hand using 4# inner hexagon sockett remove the bolt (9),take off the spring pad(5),then remove the muffler anti－scalding(8).

CAUTION:

●Prevent foreign matter from entering the interior of the muffler.