ZONTES

703R

OWNER'S MANUAL

This User Manual is considered a permanent part of the Motorcycle and should be given to the new owner of the vehicle when the vehicle is resold.

The vehicle information in this User Manual is the latest production information before printing. Guangdong Tayo Motorcycle Technology Co., Ltd. reserves the right to modify the content and design of this manual at any time, and does not assume any responsibility for it.

The content of this User Manual is updated quickly, and the final website shall prevail, and the PDF file of this manual is available for download on the official website.

The vehicles illustrated in this User Manual are for reference only, and everything is based on your actual vehicle.

The final interpretation right of this User Manual is owned by Guangdong Tayo Motorcycle Technology Co., Ltd.

No part of this manual may be copied or copied without permission.

Precautions

Thank you for choosing Zontes brand motorcycles. We design, test and manufacture this model of motorcycle for you with advanced technology, providing you with interesting, fun and safe driving. Once you are fully familiar with the essentials in this manual, you will find driving a motorcycle an exhilarating sport and a real joy of driving

For your driving safety, please note the following:

• Please be sure to read this User Manual carefully;

• Please refer to the suggestions and operating procedures in this manual;

• Please carefully read this manual and the safety tips pasted on the motorcycle body.

• The illustrations in this manual are based on the highest configuration 703R and J.JUAN calipers. Please refer to the actual product for everything.

Vehicle model, engine model

Vehicle	Engine model
703R	ZT370MU

Safety Precautions:
The safety of your and others life the is very important. Be sure to obey the traffic rules and drive safely. To help you drive safely, we provide detailed instructions and other relevant information on body stickers and in this manual to protect you or others from potential hazards.
This manual has safety warning symbols ⚠ and the following three warning words: danger, warning, and caution.
The following signal words and logos appear in this note
The meaning of the three warning words on the book and in your motorcycle is shown below：

⚠ DANGER

• Failure to follow the hazard warning，it will result in serious casualties.

⚠ WARNING

• Failure to follow warnings, it may result in serious casualties.

⚠ ATTENTION

• Failure to follow the cautionary instructions will result in damage to the motorcycle and property.

Catalog

Safety driving	1-1
Component mounting location	2-1
PKE keyless control system	3-1
Left and right handlebar control system	4-1
Instrument	5-1
Maintenance	6-1
Troubleshooting	7-1
Maintenance and storage	8-1
Circuit diagram	9-1

Catalog

Riding safely ----------1-1
Helmet and eye protection ----------1-1
Gloves----------1-1
Long-sleeved shirts/jerseys ----------1-1
Boots----------1-1
Carbon monoxide poisoning ----------1-2
Load----------1-3
Genuine Zontes accessories ----------1-3
Safe driving tips ----------1-5
Safe the engine ----------1-5
Driving ----------1-6
Braking and stopping----------1-6
Anti-lock Braking System (ABS) ----------1-8
Traction Control System (TCS) ----------1-8
Turn off the operation of TCS ----------1-8
New motorcycle Break-in Period ----------1-10
Engine break-in period----------1-10
Engine Break-in Period ----------1-10
Engine speed----------1-10
Tire Break-in ----------1-11
Avoid Prolonged Full ThrottleOperation ----------1-11
Allow Engine Oil Circulation Before Drivin ----------1-11

Component mounting location ---------- 2 - 1

Left and right handle control systems ---------- 3 - 1

Passive Keyless Entry System ---------- 4 - 1
Use of inductive keys ---------- 4-2
Non-electric induction start mode ---------- 4-2
PKE power-On ---------- 4-3
PKE shutdown ----------4-3
PKE Fault Prompt ----------4-5

Catalog

Instrument panel ---------- 5-1

Maintenance----------6-1

First maintenanc----------6-1
Maintain safety----------6-1
Routine first inspection ----------6-2
Regular maintenance of the table ----------6-3
Pre-driving inspection ----------6-5
Gel battery ----------6-7
New battery startup ----------6-7
Cleaning the battery ----------6-8
Replace the batteries ----------6-8
Use and maintenance ----------6-8
Chargingport ----------6-10
Rear seat cushion ----------6-12
Toolkit ----------6-12
Muffler ----------6-13
Spark plug ----------6-14
Check the spark plugs ----------6-14
Spark plug replacement----------6-14
Install the spark plugs ----------6-14
Engine oil ----------6-15
Check the engine oil level ----------6-15
Change engine oil and oil filter ----------6-16
Coolant (antifreeze) ----------6-19
Coolant liquid ----------6-19
Air filter ----------6-21
Oil drift pipe ----------6-22
Engine idle check ----------6-23
Check the oil grip free clearance ----------6-23
Adjust brake handle Angle ----------6-23
Check the free clearance ofthe clutch handle ----------6-24

Side stop bracket ----------6-25
Shift level ----------6-26
Fuel tank cap ----------6-27
Adjust the front suspension system ----------6-28
Adjust the rear suspension system ----------6-30
Transmission chains ----------6-31
Check the tightness of the transmission chains ----------6-33
Adjust the tightness of the transmission chain ----------6-33
Check the chain life ----------6-34
Check the anti-wear block of the rear fork ----------6-35
Tire (Inspection/Replacement) ----------6-36
Wheels ----------6-37
Brake ----------6-38
Front disc brake caliper ----------6-38
Rear disc brake calipers ----------6-38
Installation of electrical devices ----------6-41

Troubleshooting ----------7-1

Safe position ----------7-1
Catalyst ----------7-2
Troubleshooting ----------7-2
Fuel system checks ----------7-2
The engine does not work ----------7-2
The engine is underpowered----------7-2
Carbon deposit cleanup----------7-3
EFI precautions ----------7-4
EFI code ----------7-6
LCM function fault code ----------7-8
LCM key fault code ----------7-9

Catalog

Storage ----------8-1

Motorcycle ----------8-1

Fuel oil ----------8-1

Engine ----------8-1

Battery----------8-1

Maintenance ----------8-1

Tire ----------8-1

Re-enable the method ----------8-2

Clean the motorcycle ----------8-3

Wax the motorcycle ----------8-4

Inspection after cleaning----------8-4

Transportation ----------8-5

Number ----------8-6

Namepate ----------8-6

Specification sheet ----------9-1

Sircuit diagram----------10-1

Driver safety

Drivers and passengers must wear appropriate protective gear at all times, including: certified helmets, gloves, long-sleeved shirts/jerseys, trousers/cycling pants, and boots that cover bare feet/cycling boots.

⚠ WARNING

· Do not wear any loose clothing that may entangle the vehicle or hang on branches and bushes.

Helmet and eye protection

A certified helmet can mitigate head and brain injuries, and in the event of an accident, using a helmet can greatly reduce the risk of brain injury.

The helmet you choose should meet the standards of your country or region and be the right size.A helmet with face protection is a better choice because it will protect against impacts from the front at the same time, including insects, flying stones, dust, scattered parts, etc., allowing you to make timely judgments about what is happening on the road and drive the motorcycle safely.

Semi-protective helmets do not provide the same protection for the face and jaw, so if you are wearing a semi-protective helmet, you should use a removable face shield and goggles.

Gloves

Finger gloves are effective in protecting hands from wind, sun, heat, cold and splashes. Well-fitting gloves help you stay on top of your way and reduce hand fatigue. Conversely, if the gloves are too bulky, it will be difficult to operate the vehicle.

In the event of an accident or rollover, a pair of sturdy reinforced motorcycle gloves can better protect your hands.

Long-sleeved shirts/jerseys

Wear a jacket/long-sleeved shirt and pants or a full cycling suit. High-quality protective gear is more comfortable and prevents adverse environmental factors from distracting you. In the event of an accident, high-quality protective gear made of strong materials can mitigate or even prevent injury.

Boots

Always wear protective gear that protects your feet and bare feet; When the engine or exhaust gas is running, it will heat up and become very hot, which may cause burns.

⚠ DANGER

· For your life safety, please avoid driving motorcycles at high speed in heavy rain, wind, ice and snow.

Carbon monoxide poisoning

When the engine is running, it produces carbon monoxide, a colorless, odorless, odorless gas that can cause headaches, dizziness, drowsiness, nausea, confusion, and eventually death when inhaled.

In confined or unventilated spaces, the lethal level of carbon monoxide can last for hours or days, leaving your body quickly unable to support yourself and unable to save yourself, if you feel carbon monoxide poisoning, leave the area immediately, get some fresh air and go to the hospital.

⚠ WARNING

· Running a motorcycle's engine in a confined or semi-confined space may result in a rapid build-up of toxic carbon monoxide gas.

· Limit the engine of the motorcycle to running in a well-ventilated outdoor area.

Load

Accessories with extra weight, or accessories that easily block wind such as wind deflectors, backrests, saddles, cushions, suitcases, etc., should be installed as low as possible, close to the body and close to the center of gravity. Poor installation will shift the center of gravity and bring danger, the key point of installing accessories is: pay attention to left and right balance and firm stability. Poorly installed fittings or poorly designed accessories can cause maneuvering difficulties and endanger driving safety.

When loading, the cargo should be fixed in a low position as much as possible, as close to the motorcycle as possible. If the goods are not fixed correctly, the center of gravity will be raised, which will make the motorcycle difficult to control and seriously affect the driving safety. The size of the cargo affects the air resistance and affects the handling of the motorcycle. Please balance the items on the left and right sides of the motorcycle and secure the cargo.

The total weight of the driver, occupants, accessories and cargo must not exceed the limit of the maximum load.

MAX load:

341 kg

Genuine Zontes accessories

Choosing accessories for your vehicle is an important decision, and genuine parts are only available on our website and dealers, which are designed, tested, and approved for use on our vehicles.
Companies that are not affiliated with Zontes are also manufacturing parts and accessories for use in zontes vehicles or providing other modifications. Zontes is not responsible for testing these products that are not manufactured and manufactured by Zontes company, and Zontes does not endorse and do not recommend the use of accessories that are not sold by Zontes, even if they are sold and installed by Zontes's dealers.

Safe driving tips

If you are driving this type of vehicle for the first time, we recommend that you practice on non-public roads until you are familiar with the control and handling methods of the motorcycle.
Driving with one hand is dangerous, so keep your hands firmly on the handlebars and keep your feet on the resting pedals. Under no circumstances should you take your hands off the handlebar.
Reduce your speed to a safe speed before you want to steer.

The road surface is wet and smooth, the tire friction will be reduced, and the braking ability and cornering ability will naturally decrease, so it is necessary to slow down in advance.

Crosswinds are usually most likely to occur at tunnel exits, in valleys or when large vehicles are overtaking from behind, so you must be careful to stay calm, slow down, obey traffic rules and limit speed.

Start the engine

Whether the engine is hot or cold, please follow the instructions below to start the engine.

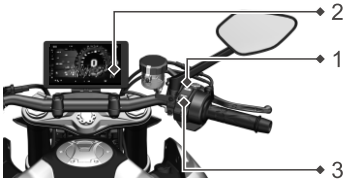

1.Confirm that the engine's ignition switch is in the position.

2.The gear is switched to neutral **N** and the neutral indicator light is on.

3. Squeeze the clutch handle, press the switch, and when in position "" the engine starts.

⚠ WARNING

- Do not start or operate the engine in a confined area.
- Exhaust fumes are toxic and can cause loss of consciousness and death in a short period of time.
- Always ride a motorcycle in open or well-ventilated areas.

⚠ ATTENTION

- Do not operate continuously for more than five minutes, because the motor will overheat and the battery will discharge.
- Wait 15 seconds between each operation of the starter to allow cooling and restore battery power.
- Do not leave the engine idling for a long time, as this may cause overheating and lead to engine damage.

Stop the engine

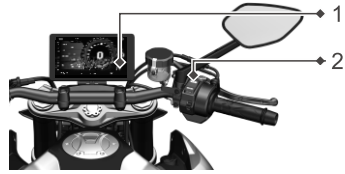

Shut down the engine completely:

1.Select neutral "**N**".

2.Turn the ignition to the (off) position.

⚠ WARNING

- Generally, the ignition switch shall be turned to (Off) position to stop the engine.
- The engine stop switch is for emergency use only.
- When the engine stops, do not turn on the ignition switch, which may cause electrical damage.

⚠ ATTENTION

- It is strictly prohibited for vehicles to keep the rear wheels running for a long time after the engine has been turned off. Any damage to the vehicle (including the engine) caused under such circumstances shall be attributed to improper human operation and will not be covered under the three gurantees service.

Driving

After starting the motorcycle, if you need to let the vehicle move, you need to put on the first gear and slowly release the clutch handle so that the vehicle can drive smoothly; When the speed increases so that the vehicle can maintain balance, put your feet on the pedals.

⚠ WARNING

· Do not wear any loose clothing that may entangle the vehicle or hang on branches and bushes.

· When going uphill, the engine speed should not be too high, otherwise, it is easy to damage the internal parts of the engine.

· Do not turn off the ignition and slide downhill, so as not to reduce the life of the catalyst in the muffler.

· When the engine is in a cold state

1.The transmission is in neutral, and the clutch lever is tightly griped.
2.The transmission is not in neutral, the side stand is fully retracted, and the clutch lever is tightly griped. The tilt switch will stop the fuel supply and ignition when the motorcycle tips over, causing the motorcycle to stall. After the fault is cleared, normal ignition can be resumed.

⚠ DANGER

· This motorcycle is equipped with an interlock switch for ignition circuit and starting circuit. The engine can only be started under the following conditions:
1.The transmission is in neutral, and grip the clutch handle tightly.
2.The tip-over switch will stop the fuel injection and ignition when the motorcycle tips over, causing the motorcycle to stall. Once the tip-over condition is resolved, the engine cut-off switch can be turned back on, and the engine can be started.

· When the engine is in a cold state

1.The transmission is in neutral position.
2.The throttle control handle is in idle position.
Squeeze the clutch handle first, then press the electric start button to start.

· When the engine is difficult to start in the cold state

1. The transmission is in neutral position.
2.Pinch the clutch handlebar first, turn the throttle 1/8 opening, and then press the electric start button to Start.
3.After the engine starts, let the engine continue to run until it is fully warmed up.
4. When the engine is still difficult to start after many starts, the cylinder may have been flooded, please perform the cylinder cleaning procedure: the engine is in neutral, pinch the clutch handle, hold the throttle full open for 3 seconds, and then press the start button for 3 seconds, and the cylinder cleaning operation can be repeated.

⚠ATTENTION

·Engine start: When the vehicle is unlocked, the whole vehicle is energized, and at this time check whether the dead-off switch is in this sign position .
·As the weather gets colder, the engine requires a longer warm-up time. Allowing the engine to fully warm up before riding reduces engine wear.

· When the engine is in a hot engine state

1.The transmission is in neutral position.
2.The throttle control handlebar is in the idle position.
3.Squeeze the clutch handle first, and then press the electric start button to start.

·When the engine is difficult to start in a hot engine state

1.The transmission is in neutral position.
2.Squeeze the clutch handle and turn the throttle to 1/8 open, then press the electric start button to start.
3.If the engine remains difficult to start after several attempts, the cylinder may be flooded. Please perform the de-flooding procedure: with the engine in neutral, squeeze the clutch handle, hold the throttle fully open for 3 seconds, then press the start button for 3 seconds. Repeat the de-flooding procedure as needed.

⚠WARNING

·Develop the habit of retracting the side bracket before starting, returning the throttle to idle, and firmly gripping the clutch handle before starting to prevent unintended forward movement. Only with the side bracket retracted and the clutch handle firmly held can the vehicle be started.
·When there is a lack of fuel or oil, it is strictly forbidden to start the motorcycle!

ABS

This model is equipped with an Anti-lock Braking System (ABS) on the front and rear wheels, which prevents the wheels from locking up for an extended period during emergency braking.

⚠ATTENTION

·ABS does not reduce braking distance.In some cases, ABS may result in longer braking distances.
·ABS does not function when the speed is below 10 km/h. During braking, the brake lever or pedal may feel springy. This is normal.
·Ensure to use recommended front and rear tires to ensure proper ABS operation.
·If you lift the rear wheel off the ground and rotate it, the ABS indicator may light up, indicating the ABS system is deactivated. Each time you lift and rotate the rear wheel, be sure to restart the vehicle's power to restore normal ABS function.

⚠ATTENTION

·If any of the following conditions occur with the indicator light, it indicates a serious issue with your ABS system. In this case, reduce speed and promptly visit an authorized Zontes dealer for inspection:
1.The indicator light remains on or flashes during riding.
2.The indicator light fails to turn off when the speed exceeds 5 km/h.
3.The ABS indicator light is on, the brakes operate normally, but the anti-lock function is not active.

TCS

The TCS of this motorcycle is set to be always on by default, meaning that every time the engine is turned off and then restarted, TCS will be restored to the on state.
The display icon for the TCS function on the instrument is "Ⓣ" . When the "Ⓣ" light is on, it indicates that the TCS function is in the off state; when the "Ⓣ" light is off, it indicates that the TCS function is in the on state.

Disable the operation of TCS

Press and hold the "MENU" key on the switch with your left hand to enter the menu, turn off TCS, or turn it off in the shortcut menu.

⚠ DANGER

·When you need to drive intensely, please turn off the TCS function in advance, otherwise it will affect the driving experience.

1.After powering on, the TCS enters the initialization preparation. The TCS indicator remains solid when initialization is incomplete and turns off once initialization is complete. During TCS operation, the indicator flashes at a frequency of 2Hz. Initialization conditions include engine start, front wheel speed above 1km/h, and no current faults.

2.The TCS system will disable under the following conditions:

(1) Throttle opening is at 0.
(2) Neutral signal or clutch signal is activated
(3) Quick release system is triggered
(4) Motorcycle decelerates sharply
(5) ABS is triggered
(6) ABS wheel speed signal is abnormal

3.Press and hold the TCS button to deactivate the TCS switch. The indicator will flash at 2Hz to indicate the state change. After deactivation, the TCS indicator remains solid for 1 second before turning off.

New Vehicle Break-in Period

Properly breaking in your new motorcycle can prolong its lifespan and optimize its performance. Below are the correct break-in methods.

Engine Break-in Period

Breaking-in is a process that occurs during the first few hours of a new motorcycle's operation.
Especially when the components are new, the internal friction within the engine will be higher. After that, once the engine has been running continuously to ensure that the components have 'bedded in', this internal friction will significantly decrease.
Carefully breaking in for a period of time will ensure lower emissions and optimize the performance, fuel economy, and lifespan of the engine and other motorcycle components.

Within the first 1000 km:

- Do not use full throttle.
- Always avoid high engine speeds.
- Avoid riding at a constant engine speed (whether fast or slow) for long periods of time.
- Avoid sharp starts, stops, and rapid accelerations, except in emergencies.
- Do not ride faster than 3/4 of your maximum speed.

The recommended maximum crankshaft speeds as follow:

Initial 0-500 kilometers:
MAX6000rpm

Subsequent 500-1000 kilometers:
MAX8000-9000rpm

Subsequent 1000 kilometers:
MAX12300rpm

The trial period and the subsequent adjustments have been completed:

- Do not excessively use the engine in cold weather.
- Do not let the engine operate strenuously; always downshift before the engine starts to 'struggle'.
- Do not ride when the engine speed is unnecessarily high.

Engine speed

To protect the engine components, the engine is limited to 6000 rpm in N gear, 12000 rpm in sixth gear, and 12300 rpm in other gears (during the break-in period: 0-1000 kilometers, the speed limit for gears 1-6 is 6000 rpm, and this limit is removed after 1000 kilometers). When the engine speed reaches the limit, the speed will automatically adjust around the limit, and fluctuations in speed are considered normal.

Tire Break-in

Like the break-in of an engine, new tires require proper break-in to ensure better performance. During the first 150 kilometers of using new tires, gradually increase the angle of the turns to break in the contact surface of the tires for better performance. Avoid sudden acceleration, sharp turns, and emergency braking during the first 150 kilometers of using new tires.

⚠ DANGER

· If the tires are not broken in properly, it can cause the tires to slip and lose control. After changing tires, it is important to drive with extra caution. Correctly break in the tires according to the content of this section by avoiding sudden acceleration, sharp turns, and emergency braking during the first 150 kilometers of usage.

Avoid Prolonged Full Throttle Operation

Avoid running at full throttle for long periods of time. Since the engine is brand new, do not apply excessive loads during the initial 1000 kilometers. During the break-in period, the various parts within the engine will wear against each other and polish themselves to achieve the correct operational clearances. During this time, it is essential to avoid prolonged full-throttle operation or any conditions that could cause the engine to overheat.

Allow Engine Oil Circulation Before Drivin

Before starting a cold engine, be sure to check the oil level in the engine oil window. If the oil level is low, add an appropriate and sufficient amount of oil.

Whether in a hot engine state or a cold engine state, before starting, the engine should be allowed to idle for a sufficient amount of time to ensure that the oil flows to all lubricating parts.

Component Installation Location

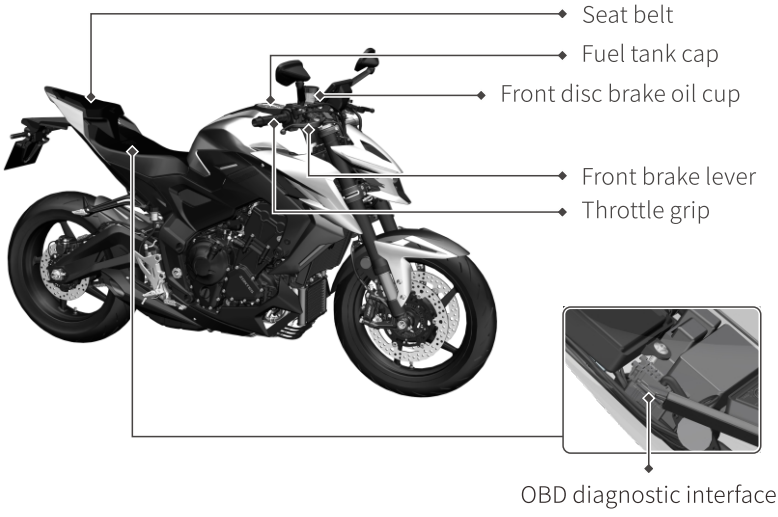

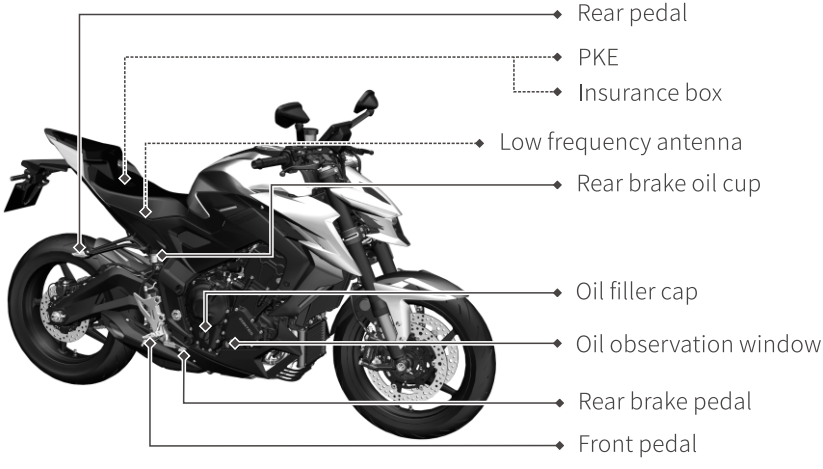

Component Installation Location

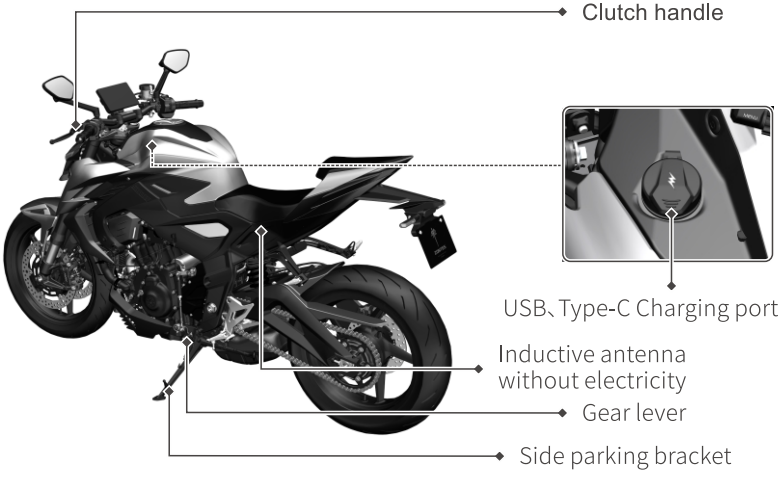

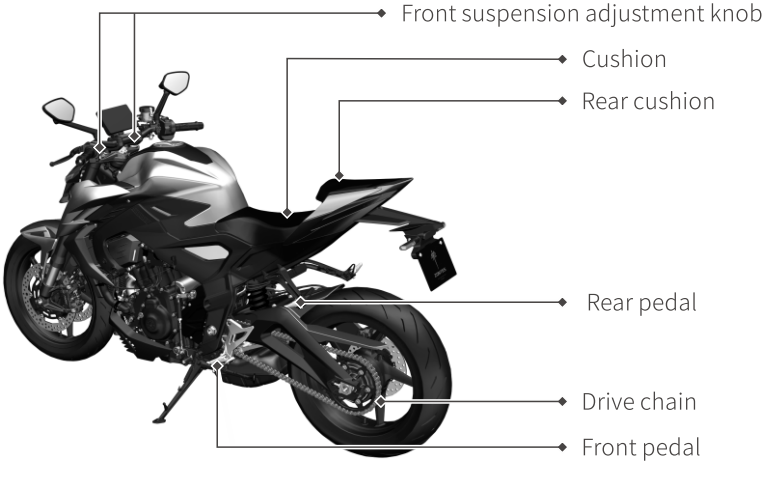

Left and Right Handlebar Control Systems

Right handle switches

Power on button
Short press to power on, long press again to power off

Flame-out ignition switch
This switch is installed on the right-hand handle switch, which is a rocker type switch, and the rocker shaft is located in the center of the rocker. When the switch is in the" " position, the vehicle is turned off, when the switch is in the " " position, the ECU is powered on, the oil pump is self-checked, at this time pinch the clutch, press the switch, and when it is in the " " position, the engine is ignited.

MENU button
For specific function operation, please refer to the instrument function description.

Left-hand handle switch

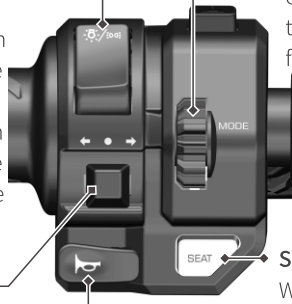

Full light switch
When the vehicle is started, press once to turn on the high and low beams to turn off the daytime running lights, and then press to turn off the high and low beams to turn on the daytime running lights. (Cycle Control)

MODE button
For specific function operation, please refer to the instrument function description.

Turn signal operation
The switch is pushed to the left ⬅ and the left turn signal flashes. When pushed to the right ➡ the right turn signal flashes, and the corresponding turn indicator on the instrument panel lights up at the same time.

SEAT switch
When powered on, short press to open the seat lock.

Horn button
Press the button and the horn sounds.

Left and Right Handlebar Control Systems

Left handle switches

High and low beam overtaking light buttons

By default, turn on the high beam upwards and press down to turn on the overtaking lights.

: High beam

: Low beam

: Overtaking lights

Hazard warning lights

Press to turn on the hazard warning light, and press again to turn off the hazard warning light.

Switch operation guide

MODE:

Mode	MODE		Flip up	Flip down
	Long press	short press	once	once
Main interface	Short mileage, average fuel consumption, average speed to zero	Slide out the shortcut menu from the left	1. When a call comes in, give priority to turning up to answer 2. Flip up to take a photo	Reject or hang up the phone
Menu interface	Go back to the previous level	Determine the settings	Toggle options	Toggle the options down

MENU:

Mode	MENU		Flip up	Flip down
	Long press	short press	once	once
Main interface	Go back to the main interface	\	Toggle up the line signal information to display the content	Toggle down the line signal information to display the content
shortcut menu	Go back to the main interface	Go to the current option and determine the current item	Toggle the options upwards	Toggle the options downwards
Quick menu	Enter the menu	Clear Lap record	\	\

Passive Keyless Entry System

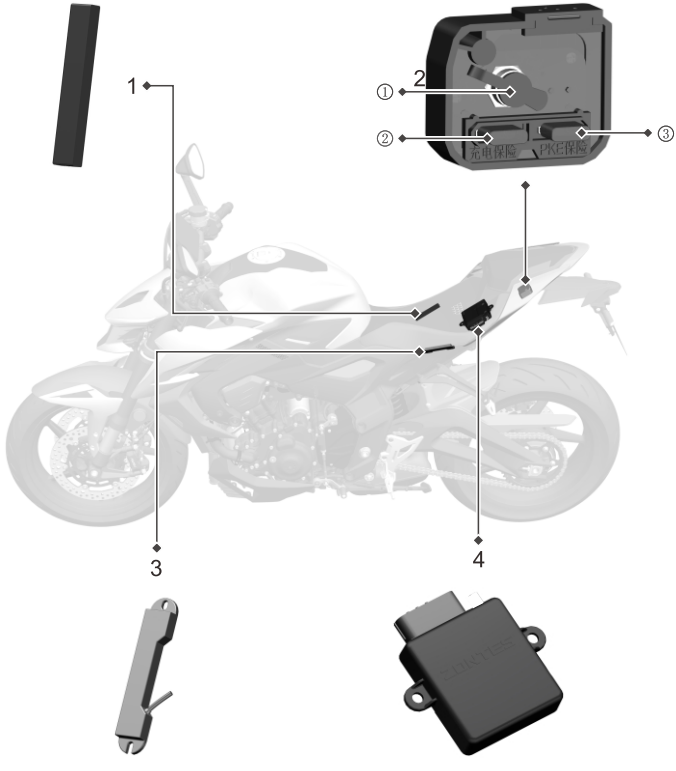

3D antenna sensing area

5

PKE (Passive Keyless Entry System) Instructions for Use:

- Low-frequency transmission antenna(Figure 1)
- Charging port holder (Figure 2)
- Non-inductive antenna(Figure 3)
- 3rd generation PKE main unit(Figure 4)
- Proximity key (Figure 5)

Explanation of PKE Accessories (Figure 3)

①DC Interface for Battery Charging
②Charging Fuse
③PKE Fuse

The use of keyless entry

The motorcycle is equipped with two key fobs, of which one should be kept in a safe place as a backup.
Both key fobs have barcode stickers attached that correspond to the numbers on the barcode sticker of the PKE main unit. The PKE main unit can automatically recognize one key fob that is near the motorcycle without the need for activation. At any time, only one key fob can be operational.

⚠ATTENTION

·The key fob has two LEDs, one green and one red. The LEDs will flash when the motorcycle detects the key. When the battery of the key fob is sufficient, the LED flashes green; when the battery is low, the LED flashes red (the red and green key lights will flash simultaneously once when the key battery is first installed). Due to the specifications and capacity limits of the key battery, the CR2032 button battery has a lifespan of approximately 18 months (specific duration may vary based on individual usage). If your key fob is unresponsive or the key fob indicator light is flashing red, please consider replacing the key battery.

Non-Electric Induction Start Mode

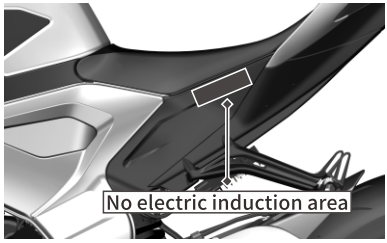

When the induction key battery is low or there is no key battery, you can turn on the machine in the non-powered induction mode. The specific steps are as follows:
When the vehicle is turned off and the faucet lock is in the locked state, long press the " ⏻ " button on the right-hand handle and hear the first "beep" sound.
Within 5 seconds, place the key sensing area (Figure 5) close to the non-powered sensing area.

⚠ATTENTION

·It is also possible to place the key sensing area (Fig. 5) close to the non-electric sensing area first, and then proceed with the above steps.
·After the non-electric induction mode is turned on, the key will no longer be detected. Please ensure to shut down the vehicle when leaving.

PKE Power-On

Short press the "⏻" button, the turn signal flashes twice, the Steering lock automatically unlocks, and then you will hear two beeps as the circuit is turned on.

⚠ATTENTION

•If the steering lock does not unlock successfully, it may be because the handlebar is pinning the lock shaft. Gently turn the handlebar to allow the lock shaft to move freely, or the battery power may be too low to unlock it. Please check if the battery level is normal. When the steering lock fails to unlock, you have 30 seconds to open the fuel tank lock and seat lock. During this time, short pressing the "⏻"button will not work. Long press the "⏻ " button or wait more than 30 seconds to automatically exit this mode.

⚠DANGER

•When using non-induction or Bluetooth mode to force start, please be sure to turn the handlebar to the far left and confirm that the handlebar lock cylinder has been retracted before using the vehicle.

⚠ATTENTION

•If, after checking the battery level is normal, you short press the "⏻ " button and the vehicle cannot be powered on but the main unit beeps once, please check the key battery level and try using the non-electric induction start mode (see the description of the non-electric induction start mode for specific operations). If the battery level is normal and the main unit does not beep, please check whether the main fuse, charging fuse, and PKE fuse (Figure 4) of the vehicle are normal. Be sure to replace any fuses with ones of the same specification.

•When the battery is empty, please complete the charging and unplug the charger before trying to power on.

PKE Shutdown

After the vehicle is stopped and the engine is turned off, place the handlebar to the far left, press and hold the "⏻" button (hold for ⩾2 seconds and then release). The turn signal will flash twice, the Steering lock will automatically engage, and the buzzer will beep once, indicating the vehicle is powered off.

⚠ATTENTION

・After shutting down, please check the steering lock status. If the handlebar is not locked, place the handlebar to the far left and the vehicle will automatically lock. If the handlebar is not placed to the far left before shutting down, do not push or let the vehicle slide, as this could cause the steering lock lock and lead to danger. When pushing the vehicle or sliding downhill, ensure the PKE is turned on (handlebar lock is unlocked).

⚠ATTENTION

・It is recommended to replace the key battery once a year.

・Vehicle should try not to be equipped with electronic devices that affect key signals, such as GPS, driving recorders, wireless chargers, etc.

・Keep the key away from interference sources such as mobile phones, power banks, and Bluetooth headphone charging cases; Try not to keep it with meal cards, NFC cards, car keys, metal pendants, etc. Do not wear protective cases made of metal, conductive or magnetic materials.

・If there is a strong interference source near the vehicle affecting the key signal, the vehicle can be unlocked by emergency start method, mobile phone remote and Bluetooth control.

PKE Fault Prompt

When an abnormal condition is detected in the vehicle, the vehicle will alert the owner with a buzzer sound of varying lengths and a fault code, as shown in the table below:

Item	Alert Sound	Fault Code	Alarm Description
START button stuck	One long, two short	8002	If a button is detected as stuck after each startup, an alarm will sound once after 10 seconds.
Abnormal high-frequency reception	Two long, one short	8006	If an abnormal high-frequency reception of the PKE main unit is detected during each normal startup, an alarm will sound once (only once, non-electric induction startup and APP startup do not check this item).
No paired remote	Two long, three short	8008	If no paired remote control is detected when pressing the red startup button each time, an alarm will sound once.
Low battery in remote	Three long	8009	If an abnormal signal from the transponder battery is detected during each normal startup, an alarm will sound once (only once, non-electric induction startup and APP startup do not check this item).
Steering lock open abnormal	Five short	8010	If an abnormal unlock signal is detected during each startup, an alarm will sound once (only once).
Steering lock close abnormal	Five short	8011	If an abnormal lock signal is detected during each startup, an alarm will sound once (only once).

Item	Alert Sound	Fault Code	Alarm Description
Abnormal low-frequency transmitting antenna	Three long and one short	8012	Each time an abnormal low-frequency transmitting antenna is detected during normal startup, an alarm will be triggered once (only once, not detected during power-off induction startup and APP startup).
Remote control out of detection area	Eight short	8014	After a normal startup, if the PKE main unit cannot receive the transponder response signal while operating, it will alarm and shut down (non-electric induction startup and APP startup do not check this item).

Instrument

This instrument has 4 theme modes that can be switched based on the usage scenario and personal preference.

Theme 1

Theme 2

Theme 3

Theme 4
(Projection mode)

⚠ WARNING

- Do not operate the instrument functions for a long time when the engine is off. This can cause the battery to become too low or depleted.
- Basic operation: You can use both hands to operate the roller and set various functions of the instrument.
- It is prohibited to use both hands to operate the instrument while the motorcycle is in motion.

Indicator and alarm lights

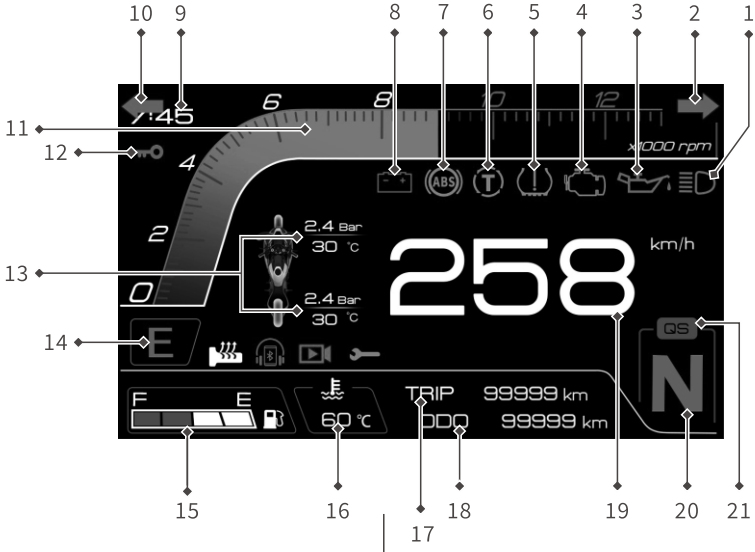

1. High Beam Indicator "≡D"
2. Right Turn Signal Indicator "➡"
3. Oil Level Warning Light "🛢"
4. Engine EFI Fault Warning Light "🚗"
5. Tire Pressure Warning Light "(!)"
6. TCS Warning Light "Ⓣ"
7. ABS System Warning Light "(ABS)"
8. Battery low voltage warning light "[- +]"
9. Clock "12:00"
10. Left turn signal light "⬅"
11. Tachometer " *x1000 rpm*"
12. Key number indicator " 🔑"
13. Tire pressure alarm, tire temperature indicator
14. E/S mode " **E/S**"
15. Fuel gauge " ⛽"
16. Water temperature alarm light "🌡"
17. Trip meter
18. Odometer "999999 "
19. Speedometer
20. Gear indicator light "**N** "
21. Quick shift indicator

High beam indicator "≣D"

The high beam indicator illuminates when the high beam of the headlamps is used.

Right Turn Signal Ligh " ➡ "

This indicator starts flashing when the turn signal switch is switched.

Oil pressure warning ligh"🛢"

The low oil pressure warning light will illuminate if the engine oil pressure is dangerously low while the engine is running.The low oil pressure warning light will also come on if the " ↻ " ignition is switched on without running the engine.

⚠WARNING

•If the low oil pressure warning light is on when the engine is running, stop the engine immediately.Do not restart the engine until the problem has been corrected.

· When the low oil pressure warning light is on, engine operation may cause serious engine damage.

⚠WARNING

•Shortly after the engine is started, the low oil pressure warning light should go out.

·If the low oil pressure warning lamp is still on after the engine is started, stop the engine immediately and check the cause.

·Running the engine at low oil pressure will cause serious engine damage.

Engine EFI fault alarm light "⚙"

After the engine is started successfully, the EFI fault indicator lamp is off during normal operation. If the EFI fault indicator lamp is on at this time, it indicates that the EFI system is faulty.

⚠WARNING

•Continuing to ride the motorcycle when the EFI system indicates a fault may cause damage to the motorcycle. Please have the EFI system inspected by a ZONTES flagship store or authorized dealer..

Tire Pressure WarningLight "(!)"

When the tire pressure and temperature are abnormal, the alarm flashes and maintenance inspection is required.

TCS Warning Ligh "Ⓣ"

When the tire pressure and temperature are abnormal, the alarm flashes and maintenance inspection is required.

⚠ATTENTION

•Failure to follow the cautionary instructions will result in damage to the motorcycle and property.

ABS warning light " (ABS) "

When the vehicle is powered on again, the ABS indicator light is always on and goes out when the vehicle speed reaches about 5km/H.If it is always on while driving.

⚠WARNING

•If the ABS warning lamp does not go out after the vehicle speed reaches 5km/H, or the warning lamp lights up when riding, please pay special attention to avoid wheel locking during emergency braking.

⚠ATTENTION

•If the warning light does not work as described above, or the warning light is on when riding, the ABS may be invalid. Please send it to the flagship store or dealer for repair.

Battery low voltage warning light "[- +]"

When the engine is not started and detect voltage< 12.5V,it would display symbol flashing alarm (flashing frequency 1Hz, ⩾ 12.5V automatic release alarm).
When the engine starts,
the detection voltage < 13V, and the display symbol flashes the alarm (the flashing frequency is 1Hz, and the alarm is automatically released ⩾ 13V).
If you find that the voltage is greater than 15V, you must stop using the vehicle immediately, and please hand it over to the Zontes flagship store or dealer to inspect the motorcycle.

Clock "12:00"

24-hour system.

Left turn signal light " ⬅ "

When the turn signal switch is switched, this indicator light starts flashing.

Tachometer "*x1000 rpm*"

Key number indicator "⚷"

Tire pressure alarm, tire temperature indicator "2.4 Bar / 30 °C"

E/S Mode "E/S"

"E" indicates the economic mode,
"S" indicates the sport mode.

Fuel gauge " "

Oil remaining when only the first segment starts flashing: approx. 3.8 L. The low oil indicator lights up at the same time.

Water Temperature Warning Light " "

After turning on, the water temperature is displayed in real-time, and the water temperature indicator starts to alarm when the temperature reaches between 117 ° -122 °. The cooling system needs to be checked.

Coolant temperature

Approximate display range:
40 °C to 122 °C;
Below 40 °C, "---" is displayed.

Between 117 °C and 122 °C: The coolant temperature indicator is on and the coolant temperature value is flashing.

The coolant high temperature indicator lights up and "122°C"flashes.

ODO meter " ODO:999999 km "

Total mileage.

Speedometer

Gear indicator light " N "

The vehicle has an international gear setting with 6 gears and a neutral gear.

Quick shift indicator

The quick shift of this vehicle is one-way, and there is no need to pinch the clutch handle only when upshifting.The quick shift system senses the gear shifting action through the sensor, and when the sensor detects the gear shifting action, the system will be controlled by the ECU to make the gear immediately engaged so as to realize the gear shifting operation without the clutch.

Instrument

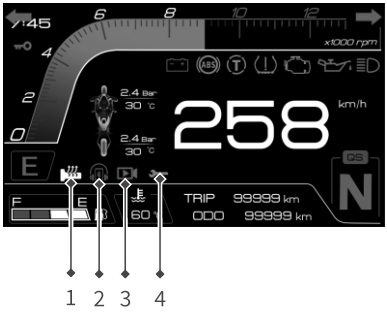

1. Heated handle "" ✱
2. Mobile phone Bluetooth "" Headset Bluetooth ""
3. Indicator light of driving recorder ""
4. Maintenance indicator ""

Heated handlebars "" ✱

The handlebar heating function has three different temperature heating levels, and the handlebar heating function can be used when the ambient temperature is low to improve driving comfort.
When the handlebar heating function is turned on by the handlebar button setting, the handlebar heating indicator displays the currently selected temperature range.
In order to avoid battery loss, do not use the handlebar to heat up for more than 10 minutes at idle speed, so as not to prevent the vehicle from starting.

To operate the handle heater ✱

1. Start the engine.
2. Short press the ""function switch to turn on the heating handle function (cycle control).

Icon	Gears
	First gear
	Second gear
	Third gear

Mobile phone Bluetooth " "

Illuminates when headset Bluetooth is connected.

Headset Bluetooth ""

Illuminates when headset Bluetooth is connected.

Indicator light of driving recorder " "

Check out the DVR instructions that follow.

Fuel gauge " "

Refer to Scheduled Maintenance Schedule-Engine Oil.

✱ This function is only available for models with heated handle.

Use the "MENU" button on the right handlebar switch and rotate the roller to switch to view the basic information of the vehicle.

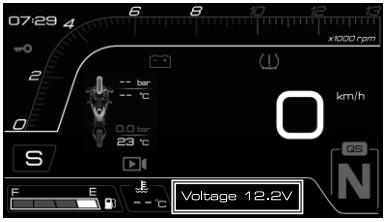

Voltage

When the engine is not started, the detection voltage is less than 12.5V and the display symbol flashes to give an alarm (flashing frequency1Hz, ⩾ 12.5V, automatic alarm release).
Detection voltage at engine start <13V display symbol flashing alarm (flashing frequency1Hz, ⩾ 13.5V, automatic alarm release).
If the voltage indication is found to be greater than 15 V, you must stop using the vehicle immediately. Please hand it over to the ZONTES Flagship Store or the dealer to check the motorcycle.

Subtotal mileage

Total mileage

Instantaneous fuel consumption

It display the current fuel consumption within the range of 0.0-99.9 L/100km; when the speed is greater than 5km/H,the position of average fuel consumption will display instantaneous fuel consumption.

Average speed

Displays the average fuel consumption after the subtotal mileage is reset.The average fuel consumption will be calculated based on the value on the subtotal odometer.Display range: 0.0-99.9 L/100km, when the average fuel consumption is reset: "--. --" is displayed; when you reset the subtotal odometer, the average fuel consumption is reset.On the main screen, long press the right handle "MENU" to reset the average fuel consumption.

Shortcut menu

Use the "MODE" button on the left handle switch, short press to enter the shortcut function menu, rotate the wheel to switch the function options, and short press to open or close.

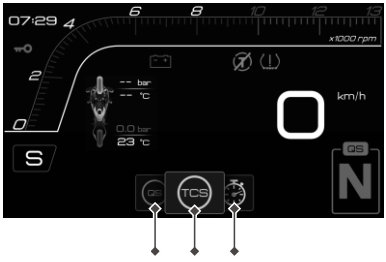

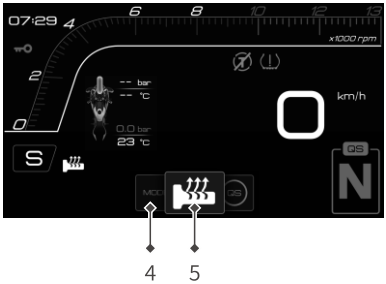

1. Fast shift indicator
2. TCS
3. Lap time record
4. E/S model
5. Heat the handle ✱

✱This function is only available for models with heated handle.

Menu structure

Main interface	Level 1 menu	Level 2 menu	Level 3 menu	Level 4 menu
	Instrument	Clock setting	In-line calibration	
			Set manually	
		Bluetooth settings	Turn off Bluetooth	Turn on Bluetooth
			Mobile phone connection	
			Headset connection	
			Delete connection	
		Unit settings	The Metric System	
			Imperial Units	
		Language settings	Chinese	
			English	
		Backlight settings	1……5gears	
			Automatic	
	Format switching	Athletics		
		Leisure		
		Wilderness		
		City		
		Screen casting		
	Vehicle Information	Vehicle information		
		Maintenance information	Reset	Yes
				No

Menu structure

Main interface	Level 1 menu	Level 2 menu	Level 3 menu	Level 4 menu
		Tire pressure setting	Tire pressure monitoring : [Turn on]	Tire pressure monitoring : [Turn off]
			Unit:[kPa]	Unit:[psi]
				Unit:[bar]
			Front-wheel learning	
			Rear wheel learning	
	DVR	Recording settings	Start recording	
			Only turn off the recording	
			Turn off recording (delete all recordings and photos)	
		DVR display	Foresight	
			Back-sight	
		DVR playback	Foresight playback	
			Back-sight playback	
			Take a photo	
	Ride control	TCS	Turn on	
			Turn off	
		ABS	Turn on	
			Turn off	

Quick menu

In the main interface, short press the left handlebar wheel to enter the quick menu. The quick menu has three functions (there is an additional lap timer function in the racing interface), namely TCS switch, economy/sport mode switch, and handlebar heating gear adjustment. When in the quick menu, the specific operations are as follows:

Left handle wheel				right handle wheel	
Short press	Long press	page up	page down	long press	short press
Enter	Return to the previous menu	Change options	Change options		
Start timing			Enter the lap recording interface	Enter the main menu	Clear lap record
Record one time					

Quick menu

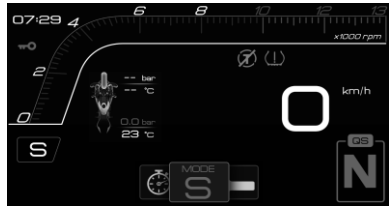

E/S Mode

TCS

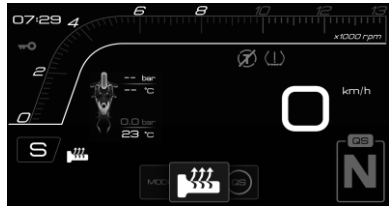

Handle heating

Clock Settings

Online calibration: automatically synchronise the GPS time every time you turn on; manual setting: you can manually set the year, month, day, hour and minute according to the local time: enter the manual setting, set according to the order of "year", "month", "day", "hour" and "minute". When the value flashes, use the "MENU" key to flip the scroll wheel until the value you need is displayed, and briefly press the "MENU" key to determine and switch.

Bluetooth settings

Pairing: Before two Bluetooth devices can establish a connection to each other, they must recognize both. This process of mutual recognition is called pairing. Once the device is recognized, it will be stored and therefore must only be paired on first contact.

Pairing Prerequisites:

The device's Bluetooth function must be turned on; The device must be discoverable by other devices.

Unit settings

Switch between metric or imperial unit formats to facilitate your reading habits.

Language settings

Change the system language.

Backlight settings

You can choose one of the 5 backlight brightness levels or choose Auto Adjust (automatically adjusts brightness based on photosensor).

Vehicle Information

Display ECU, PKE, LCM, ABS, DVR and tire pressure current faults and remaining service mileage, version number and other information.

Key number "⊓O"

It means that the number of the key currently used corresponds to the key code in the Zontes smart APP, for example: the No. 1 key corresponds to the【0】key code in the APP; The No. 2 key corresponds to the【1】key code in the APP; And so on, each motorcycle can have up to 4 keys.

Maintenance information

You can check the remaining maintenance mileage in the vehicle information, and short press OK in the remaining maintenance mileage option, you can choose to reset and enter the next maintenance cycle.

Tire pressure information

When the tire pressure monitoring setting is turned on, the tire pressure and temperature will display "--" every time the vehicle is turned on, and the actual tire pressure value will not be transmitted until the minimum speed of 30km/h is exceeded for the first time (the TPMS sensor sends a signal to the vehicle only after the minimum speed is exceeded).

Tire pressure unit setting: short press OK button to switch kPa/psi/bar units to suit your reading habits

① Use the "MENU" key to turn the wheel until the cursor falls on the square bracket of the front wheel or rear wheel sensor, short press the "MENU" key, and "[Learning]" will be displayed, waiting for TPMS to send a signal to the vehicle;

②Continue to inflate or deflate the front or rear wheels until the sensor ID and tire pressure and temperature are displayed, and "success" is displayed in brackets, indicating that the learning is successful.

If learning is unsuccessful or displayed data is abnormal, please repeat the above steps.

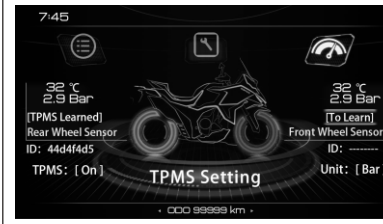

DVR

Short press the "⮌" back button on the main interface, you can take a photo, take a photo before and after and store it, and you can view the captured photos in the DVR playback. You can choose to start recording, turn off recording only, and turn off recording (delete all videos and photos) from the recording settings, where turning off recording (deleting all videos and photos) will be formatted and stored, which will lose all videos and photos, which is irreversible.

The meter has built-in 128G EMMC storage, does not support memory card expansion, after starting recording, a video file is stored every 1 minute, when the storage is full, the new video file will automatically overwrite the old file.

You can view the current camera through the front and rear view in the DVR display, and calibrate the camera picture. Open the Zontes smart APP, scan the QR code of the projection interface and connect to the instrument successfully, you can download the video files and photos you need.

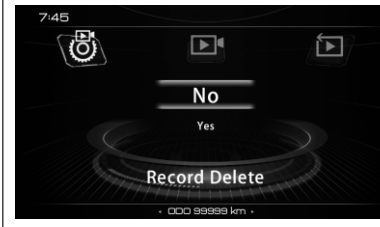

Operation	DVR status	Icon displays	Frequency of flashing	Icon
Start recording	Normal recording	Light is not on	-	
	Recording exceptions	red light flashes	1Hz	
Turn off recording (delete all recordings and photos)	Turn off recording	Light is not on	-	
Capture	Take a photo of the front and back	Flash once	-	

DVR fault code

Number	Fault codes	Description of the fault code
1	1003	The front camera signal is abnormal
2	1004	The rear camera signal is abnormal
3	1005	Storage exceptions

DVR button operation

DVR Playback List		When DVR plays back video	
Long press the right handle whee	Short press the right handle wheel	Long press the right handle wheel	Short press the right handle wheel
Back to menu options	Start Playing	Return to playback list	pause

First maintenance

The initial 0-1000 km maintenance is a must to keep the vehicle in the safest and most efficient condition. Ensuring safety is the owner/driver's obligation.

⚠ WARNING

· Failure to perform proper maintenance before riding or failure to properly troubleshoot a problem could result in an accident resulting in serious injury or death.

· Always follow the inspection, maintenance recommendations and maintenance interval schedules provided in this Owner's Manual.

· If you are not familiar with vehicle maintenance, please have it serviced by a Zontes dealer.

Maintenance safety

Please read the maintenance instructions before each maintenance and make sure you have the necessary tools, parts and skills. We cannot remind you of every hazard that may occur when performing maintenance. Only you can decide whether to perform maintenance repairs.

Please follow these guidelines for maintenance:

· Turn off the engine and remove the key.

· Place the motorcycle on firm, level ground using the side stand or support it with the service stand.

· Wait for the engine, muffler, brakes, and other hot parts to cool before starting any operation, as this may result in burns.

· Start the engine only under specified circumstances and in a well-ventilated environment.

⚠ WARNING

· The brake disc, brake caliper, and brake pads may become very hot during use. To avoid possible burns, please allow the braking components to cool down before touching them.

Routine first maintenance

The maintenance during the initial 0-1000 kilometers is a very important task. During this period, all engine components have been broken in. Therefore, during this maintenance, all components should be readjusted, all fasteners should be tightened, and the oil contaminated by component wear shavings should be replaced. Carefully conducting the first 1000 kilometers maintenance will ensure that your motorcycle performs well and extends its lifespan.

⚠ATTENTION

· Be sure to check the periodic maintenance record each time to ensure that it is completely followed according to this manual's instructions. The initial maintenance from 0 to 1000 kilometers should be carried out as described in this section. The 'Danger' and 'Warning' in this section should be paid special attention to. Replacing with inappropriate parts can lead to accelerated wear of the motorcycle and shorten its lifespan. When replacing parts for your motorcycle, please choose to use original parts from our company.

· Waste generated during maintenance and repair, such as cleaning agents and waste oil, should be properly handled to avoid environmental pollution.

· The maintenance schedule specifies the minimum required maintenance. If your motorcycle is frequently used in harsh environments, maintenance should be more frequent than what is outlined in the schedule. If you have any questions regarding the maintenance intervals, please consult a qualified service unit from our company.

Regular maintenance table

Ⓘ Check (clean, lubricate, adjust or replace if necessary) Ⓡ :Replace Ⓣ:Fastening ★:Annotation

Item		Pre-ride check	Frequency*1						Annual Check	Regular replacement
			X1000km	1	5	10	15	20		
			X1000mi	0.6	3	6	9	12		
Expansion tank Antifreeze(Coolant)		Ⓘ		Ⓘ	Ⓘ	Ⓘ	Ⓘ	Ⓘ		Replace every 3 years or 30000 kilometers
Brake pad wear		Ⓘ			Ⓘ	Ⓘ	Ⓘ	Ⓘ	Ⓘ	Check for wear and tear
Rear fork wear-resistance block		Ⓘ			Ⓘ	Ⓘ	Ⓘ	Ⓘ		30000 kilometers replacemen ★ Note 1
Fuel level		Ⓘ								
Engine oil	☆	Ⓘ		Ⓡ	Ⓡ	Ⓡ	Ⓡ	Ⓡ	Ⓘ	★ Note 2
Oil filter	☆			Ⓡ		Ⓡ		Ⓡ	Ⓘ	★ Note 2
Air filter (filter element)	☆☆				Ⓘ	Ⓡ	Ⓘ	Ⓡ		
Tire	☆	Ⓘ			Ⓘ	Ⓘ	Ⓘ	Ⓘ	Ⓘ	Check tire pressure and tread wear
Brake fluid level	☆	Ⓘ			Ⓘ	Ⓘ	Ⓘ	Ⓘ	Ⓘ	Replace every 2 years
Drive chain	☆	Ⓘ			Ⓘ				Ⓘ	★ Note 1
Front shock absorber	☆☆	Ⓘ				Ⓘ		Ⓘ	Ⓘ	★ Note 3
Rear shock absorber	☆☆	Ⓘ				Ⓘ		Ⓘ	Ⓘ	Check for leaks
Brake system	☆☆	Ⓘ				Ⓘ		Ⓘ	Ⓘ	Check the oil level in the cup
Brake hose				Ⓘ	Ⓘ	Ⓘ	Ⓘ			
Air filter oil pipe				Ⓘ	Ⓘ	Ⓘ	Ⓘ	Ⓘ		
Electronic seat cushion lock, Electronic fuel tank lock										Clean and lubricate every 4000 kilometers

Regular maintenance table

Ⓘ Check (clean, lubricate, adjust or replace if necessary) Ⓡ :Replace Ⓣ:Fastening ★:Annotation

Item		Pre-ride check	Frequency*1						Annual Check	Regular replacement
			X1000km	1	5	10	15	20		
			X1000mi	0.6	3	6	9	12		
Idle speed						Ⓘ		Ⓘ		Start check
Fuel line					Ⓘ					Check for leaks
Muffler	☆				Ⓘ	Ⓘ	Ⓘ	Ⓘ	Ⓘ	★ Note4
Clutch lever free play	☆				Ⓘ	Ⓘ	Ⓘ	Ⓘ	Ⓘ	Follow the operation video
Gap of throttle cable	☆				Ⓘ	Ⓘ	Ⓘ	Ⓘ		Gap distance: 2.0~4.0mm
Internal mechanism of faucet lock	☆					Ⓘ		Ⓘ		★ Note4
Bolts and nuts in steering mechanisms	☆☆			Ⓣ	Ⓣ	Ⓣ	Ⓣ	Ⓣ	Ⓘ	Figure 1
Steering bearings	☆☆						Ⓘ			15000 kilometers to replenish butter
Vehicle fasteners、bolts、nuts	☆☆			Ⓣ	Ⓣ	Ⓣ	Ⓣ	Ⓣ		Figure 1
The axle sleeve and oil seal of the wheel and sprocket seat	☆☆				Ⓘ	Ⓘ	Ⓘ	Ⓘ	Ⓘ	★ Note5
Brake hose	☆☆					Ⓘ		Ⓘ	Ⓘ	Check for leaks
Spark plug	☆☆					Ⓘ		Ⓡ		
Rear fork needle roller bearing	☆☆						Ⓘ			15000 kilometers to replenish butter
Multi-link suspension needle roller bearing	☆☆ ☆☆						Ⓘ			15000 kilometers to replenish butter
Valve clearance				Check and adjust every 40000 kilometers						★ Note6

☆ : This service is provided by dealers or qualified repair units. If the owner has suitable tools, service information, and a certain understanding of the machinery, they can implement it themselves.

☆☆ : For safety reasons, such projects should be provided by dealers or qualified repair units.

★ Note 1: Clean and lubricate the chain every 500-1000 kilometers, and check the wear of the upper and lower anti wear blocks of the fork.

★ Note 2: For the first 1000 kilometers, perform the first maintenance by changing the oil and oil filter. For instruments with actual mileage of 5000 kilometers or 15 months (whichever comes first), perform the second maintenance. From then on, perform regular maintenance every 5000 kilometers or 15 months (whichever comes first).

★ Note 3: Check, clean, lubricate, and maintain every 10000 kilometers (6000mi). For detailed maintenance operations, please refer to the official website's "steering lock maintenance video".

★ Note 4: Check the wear of the oil seal lip and add lubricating grease if necessary.

★ Note 5: Check the wear of the oil seal lip and add lubricating grease if necessary.

★ Note 6: Gap (cold state inspection) inlet: 0.1~0.22mm, row: 0.2~0.33mm

Check if the front disc brake caliper bolts, front shock absorber bottom cylinder bolts, upper and lower connecting plate bolts, upper connecting plate decorative nuts, disc brake disc and sprocket bolts (nuts), rear axle nuts and split pins, rear fork nuts, and side bracket flameout switch bolts are loose. Check if the rear axle opening pin is abnormal. Check if the retaining rings on both sides of the main bracket are complete.

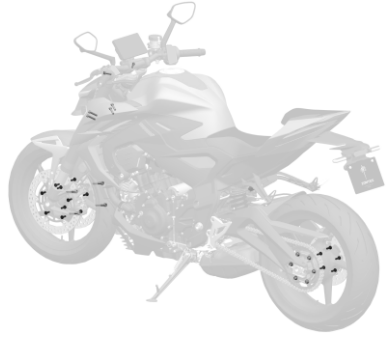

Figure 1

Pre-drive inspection

Lf you do not inspect your motorcycle well before riding and do not properly maintain it, you will increase the chance of an accident and damage to your motorcycle. Always inspect your motorcycle before using it to make sure it is safe to operate. Refer to the Maintenance section of this Owner's Manual.

Please check the following before riding a motorcycle:

Steering system

- Flexible steering
- No hindrance to movement
- No play or looseness

Accelerator

- Correct throttle cable clearance
- Smooth operation and smooth throttle return

Shock absorbers

- No foreign matter attached to the surface, no oil leakage, smooth operation

Brakes

- The brake handle operates normally
- The brake fluid is above the lower limit mark of the brake fluid cylinder.
- There is no "spongy feeling" of poor braking
- No dragging (braking)
- No brake fluid leakage
- The wear of the brake disc/pad cannot exceed the specified range

Fuel

- Sufficient fuel for the planned distance

Engine lubricant

- Check if the oil level is sufficient. Follow steps 6-16. The oil level should be between the upper and lower limits of the oil window.

light

- The indicator lights of the headlights, taillights/brake lights, instrument lights, turn signals, front position lights, and license plate lights can light up normally

Indicator

The high beam indicator and turn signal indicator can light up normally.

Horn

- functioning normally

Brake switch

- functioning normally

Flame rollout switch
·Normal operation

Side stand/ignition interlock switch
·Normal operation

⚠ ATTENTION

· Failure to be familiar with the control components may cause loss of vehicle control, resulting in an accident or personal injury.
· Please read the user manual carefully to familiarize yourself with all the control components. If there are control components or functions that you do not understand, please consult a Zontes dealer.

⚠ WARNING

·Installing non-genuine Zontes parts may make your motorcycle unsafe, which may result in an accident in which you are injured or even killed.
·Always use Zontes original genuine parts or replacement parts designed and certified for your motorcycle.

Gel battery

The battery is located under the driver's seat, please disassemble the battery in the following order:

1.Open the rear seat cushion and the main seat cushion, and turn off the motorcycle power switch.

2.Use a T25 Torx screwdriver to remove two M6×14 shoulder bolts and take off the cover of the electrical component box.

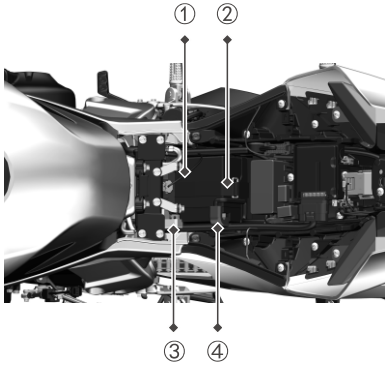

①Battery
②Battery strap
③Battery negative cable (black)
④Battery positive cable (red)

3.Remove the battery strap, lift off the black protective cap, disconnect the negative terminal (–), lift off the red protective cap and then disconnect the positive terminal (+).

⚠ATTENTION

·When re-installing the battery after disassembling it, you need to straighten the surrounding wiring harnesses, especially the positive position of the battery and other red wires to avoid touching the frame and metal such as the battery, and the battery needs to be completely installed in the battery box.

·When re-installing the battery, starting or riding the whole vehicle with power failure, battery dormancy restart, abnormal idling, re-plugging the fuse and other similar situations, pay attention to resetting the individual hardware of the electronic injection. The steps are: turn on the electric door lock switch and the engine shutdown switch, start the engine in neutral by pressing the clutch, turn off the engine shutdown switch after 10 seconds, turn on the engine shutdown switch after 10 seconds, and repeat it twice.

Cleaning the battery

1.Remove the battery.
2.If the terminals are just starting to corrode and there is a white substance on top, clean with warm water and wipe dry.
3.If the terminals are severely corroded, use a wire brush or sandpaper to clean and polish. Please wear safety goggles.

Replace the battery

When replacing a battery, you should confirm the battery model and verify whether it is consistent with the original battery model. The battery specifications are relatively matched when the motorcycle is designed. If a different type of battery is used, the performance and life of the motorcycle may be affected, and it may cause circuit failure.

Use and Maintenance

1. Each electric start time should not exceed 5 seconds. If it fails to start for several consecutive times, check the fuel supply system and the starting and ignition systems.
- Frequent electrical starting;
- Short riding time and distance;
- Long periods with the engine running but not igniting;
- Installation of additional electrical devices, such as high-power headlights, audio equipment, GPS and other power-consuming devices.

2. When the starter motor turns weakly, the lights are dim, the horn sounds hoarse, and the ignition shows a black screen that requires a reboot, the battery should be recharged immediately.
3.When a motorcycle is not used for a long time, the battery should be removed and stored separately, or the battery connection cable should be disconnected. Please charge the battery before the motorcycle is no longer in use and recharge it every three months.
4.Charging precautions:
- Please use the dedicated charger provided by our company to charge during charging. You can use the motorcycle's built-in charging port or remove the battery for separate charging.
- Do not overcharge the battery, as overcharging can lead to leakage, swelling, or even explosion, which can cause varying degrees of danger.

⚠ATTENTION

1. Do not attempt to open or modify the battery in any way.
2. Avoid using or storing the battery near high temperatures or open flames, otherwise it may damage the battery and the vehicle.
3. Do not install the positive and negative poles of the battery incorrectly, otherwise it may damage the battery and the vehicle.
4. Please use the matching screws and nuts
5. Firmly connect and install the battery terminals, otherwise it may damage the battery and the vehicle.
6. During use or charging, if the battery has odor, heat, deformation, fading of the shell, and any other abnormal conditions, please stop using it and immediately remove the battery from the vehicle.
7.The installation of external devices such as anti-theft devices, GPS, fog lights, etc. will have a certain impact on the battery and the vehicle circuit. You need to select qualified brand products and connect them to the reserved interface of our company. Do not change the wires privately, otherwise it may cause the abnormal operation of our vehicle circuit system and cause the battery to over-discharge and other defects.
8.Do not damage the battery. The electrolyte in the battery is harmful to human skin and eyes. Avoid splashing on the skin, eyes and clothes. Once it comes into contact with the skin and eyes, please wash it immediately with plenty of clean water and go to the hospital for treatment.

Chargingport

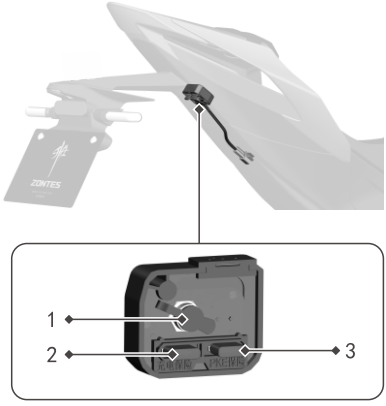

1. DC interface for battery charging
2. Charging fuse
3. PKE fuse

Charger Instructions

When the vehicle is not ridden for a long time or the battery cannot be started due to other reasons, please follow the steps below to recharge the battery:

1.Take the T25 star hexagon and cross screwdriver from the toolkit inside, and use the T25 star hexagon to remove the bolts securing the upper part of the mudguard.

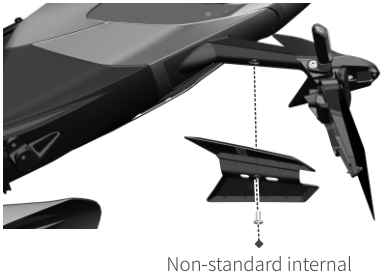

Non-standard internal plum blossom bolt

2.Disassemble the left decorative cover of the instrument, and take out the T25 plum blossom hexagon and cross batch from the tool bag inside.

3.After removing the bottom cover of the rear mudguard, the PKE accessory can be seen.

4. Insert the DC output plug of the charger into the battery's DC charging port.

5. The charger input AC socket is directly plugged into a household 110-220V power supply. Wait for the charger to light up green to complete charging, then unplug the charger.

Motorcycle starter battery charger

LED Indicator Lights

Red light	Charging Mode
Green light	Fully charged

ATTENTION

· Please purchase a professional charger from Zontes, which is available in Zontes Mall or dealers; it is forbidden to use other chargers that have not been inspected and qualified to charge the battery.

Main cushion/Tool bag

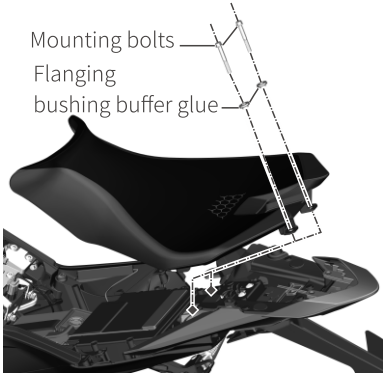

Remove

1. Remove the rear seat.
2. Remove the 2 mounting bolts, flange bushings and buffer glue, and then remove the main seat diagonally to the rear.

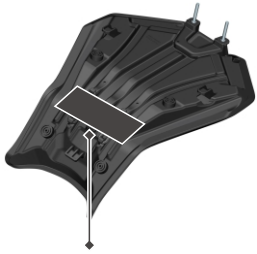

3.After disassembling the rear cushion and the main cushion, rotate the main cushion 180° to see the location of the tool bag.

Rear cushion

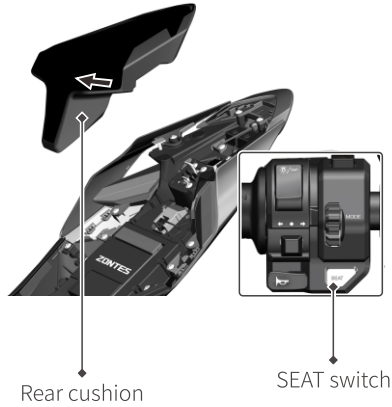

Dismantling

1.Press the 'SEAT' button on the left hand briefly, then lift the rear seat cushion upwards.

Muffler

Muffler maintenance and care

The muffler of this vehicle is equipped with a catalyst, which can effectively reduce the emission of harmful substances into the atmosphere during the operation of the motorcycle.

To make this device work effectively, please refer to the regular inspection table in the "Maintenance" section. To increase the service life of the muffler and avoid malfunctions such as muffler rust and reduced catalyst conversion efficiency caused by abnormal use and maintenance.

Please be sure to comply with the following:

- It is forbidden to throttle at high speed for a long time.
- It is forbidden to drive at low speed with heavy load for a long time.
- It is forbidden to add anti-rust oil or engine oil to the muffler.
- It is forbidden to directly rinse the muffler with cold water when the motorcycle is hot.
- It is forbidden to coast with the engine turned off.
- It is forbidden to use inferior engine oil.
- Use unleaded gasoline.
- Clean the dirt on the surface and tail of the muffler in time.
- Keep the engine in good running condition, and perform regular maintenance and inspection. Avoid poor engine combustion, which may cause secondary combustion of exhaust gas in the exhaust pipe and cause catalyst sintering failure.
- When installing the muffler, be sure to install the muffler gasket correctly.
- When installing the muffler decorative cover, be sure to install heat insulation pads at each screw point to avoid the muffler high temperature from burning the decorative cover or causing fire hazard.

Spark plug

Check the spark plugs

Spark plugs are important parts and should be removed and inspected regularly according to the maintenance schedule. The condition of the spark plugs can indicate the condition of the engine. The ceramic insulator around the center electrode of the spark plug should be light brown (the ideal color for normal vehicle operation). If the spark plug has a significantly different color, it may be caused by poor engine operation.

If the spark plug electrode is corroded, has excessive carbon deposits or other deposits, it should be replaced as soon as possible.

Zontes specified spark plug:
TORCH/BN8RTIP-8

Spark plug replacement

1. Use a hard iron wire or steel needle to remove the carbon deposits on the spark plug, and then use a feeler gauge to adjust the spark plug gap to between 0.7 and 0.9 mm.
2. When removing the attached carbon deposits, you need to observe the two colors at the porcelain tip of the spark plug at the same time. This color tells you whether the standard spark plug is suitable. The ignition area of a normal spark plug that has been used is light brown. If the insulator is burnt white and the electrode is burned, it is more appropriate to use a cold type spark plug.

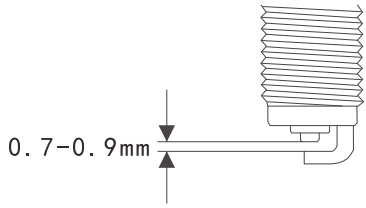

Spark plug gap:
0.7-0.9mm

Installing the spark plug

Clean the spark plug washer contact surface and wipe off any dirt on the spark plug threads.

Locking torque:
Spark plug:
13N.m

⚠ WARNING

·Incorrect installation of the spark plug can damage the engine cylinder head. Installing the spark plug with excessive torque or causing the threads to be twisted can also damage the engine cylinder head, so install the spark plug carefully. If you do not have a torque wrench when installing or replacing a new spark plug, tighten it 3/8 turns (135°) after tightening it until there is resistance. If you use an old spark plug, tighten it 1/12 turn (30°) after tightening it until there is resistance, but the spark plug should be tightened to the specified torque as much as possible.

⚠WARNING

·Dirty substances can enter the engine through the spark plug mounting hole and damage the engine. After removing the spark plug, the spark plug mounting hole must be covered with non-woven fabric or other clean soft fabric that will not shed or leave residue.
·Spark plugs with a calorific value lower than BN8RTIP-8 are prohibited.

Engine oil

Whether the engine can be durable, it is important to choose high-quality engine oil and replace it with new oil regularly. Regularly checking the oil level and changing the oil regularly are two important tasks that must be performed in the maintenance project.

Check the engine oil level

Follow the steps below to check the engine oil level.
1.Park the motorcycle on a level surface and raise the main stand or keep the vehicle in an upright position.
2.Start the engine and run it at idle speed for 3-5 minutes.
3.Turn off the engine and wait for 3-5 minutes.
4.Keep the vehicle upright and observe the oil,check the window. The oil level should be between the minimum and maximum oil level marks.

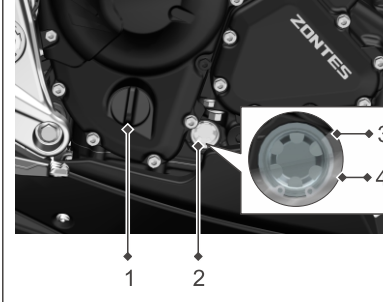

1. Engine oil filler cap
2. Engine oil observation window
3. Maximum oil level line
4. Minimum oil level line

⚠ATTENTION

· The engine oil level should be between the upper and lower limits.

5. If the engine oil is found to be below the minimum oil level, remove the engine oil filler cap and add oil.
6. Check whether the engine oil filler cap O-ring is damaged. If damaged, replace it in time.

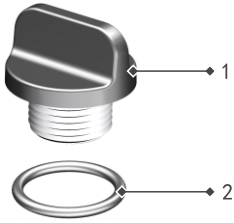

1. Engine oil filler cap
2. O-ring

Change engine oil and oil filter

Change the engine oil when the maintenance cycle is reached. The oil change should be done when the engine is warm (idling for 3-5 minutes) to ensure that the old oil is drained out more completely. The steps are as follows:

1.Park the motorcycle on flat ground with the main frame. Start the engine and idle for 3-5 minutes, turn off the engine and wait 3-5 minutes.
2.Place an oil pan under the engine drain bolt to collect the used oil.
3. Remove the engine fuel cover and O-ring, use a wrench to remove the engine oil drain bolt and gasket, and release the old oil.

It is forbidden to start or run the engine during the oil discharge process, and it must be ensured that there is enough oil in the engine before starting the engine.

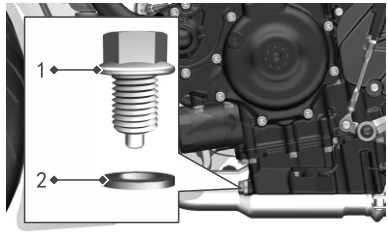

1. Engine drain bolts
2.Gaskets

4.Reinstall the oil drain bolt and new washer (clean the thread before installation), and tighten the oil drain bolt according to the 40±3N.m torque standard using a torque wrench.

⚠ATTENTION

·It is recommended to use a funnel when refueling

⚠WARNING

·If the prescribed oil is not used, it may damage the engine.

⚠DANGER

·When the engine is running, it is forbidden to open the fuel filler nut to prevent the high-temperature oil from splashing out and injuring people.

5.Place an oil basin underneath the oil filter.
6.Remove the oil filter with the filter wrench.
7.Use a clean non-woven fabric to wipe off the residual oil and impurities.
8.Install the new oil filter: Before installation, drop a small amount of oil into the new machine filter, and apply a thin layer of engine oil on the sealing ring to tighten the oil filter.

1.Oil filter seal ring

①Add oil from the engine fuel hole

Tightening torque:

Engine oil drain bolt:
40±3N.m

Oil filter
20±2N.m

②After checking the O-ring of the engine fuel filler cap, install the oil filler cap.

③Run the engine at different speeds for 3 minutes. When running, check whether the disassembled parts are leaking.

Engine oil recommendation

Engine oil (SN10W—50/1L)

Engine oil change capacity

Replace the oil:
3.0 L
Replace the oil filter:
3.4 L

⚠ATTENTION

• Before starting the engine, be sure to wipe off the leaking oil.

9.Let the engine idle for 5 minutes, then turn off the engine and stop for 3 minutes, and check the oil level of the engine oil through the oil level marking line in the oil window (ensure that the oil is within the engraved line of the window). Check again for leaks.

⚠ATTENTION

· Before installing the oil filter, please carefully check whether the seal ring is correctly installed in the groove, and confirm whether the seal ring is damaged. If there is damage or cutting edge, it should be replaced in time, otherwise it will lead to oil seepage.

Coolant (antifreeze)

Recommended coolant:
TOTAL antifreeze liquid

Total amount of coolant (antifreeze):
1900ml (250ml with auxiliary water tank)

Cooling

Check the coolant level in the storage tank while the engine is cooling.
Maintenance
1. Place the motorcycle on a stable and flat surface to keep it upright.
2. Check if the coolant level in the storage tank is between the upper and lower level markings.

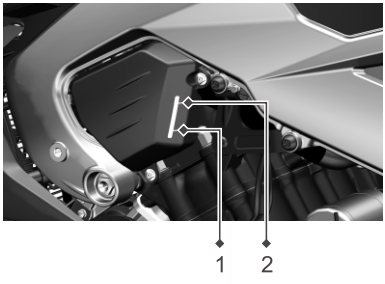

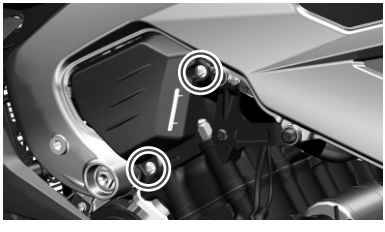

1.Maximum liquid Level Mark (H)
2.Bottom Level Mark (L)

3.If the total amount of coolant is below the lowest liquid level mark (L), remove the two M6 bolts and take off the decorative cover of the coolant auxiliary tank.

⚠ATTENTION

- **Only remove the coolant sub-tank cover.Do not remove the tank cover when the engine is very hot.**

Coolant expansion tank cap

4. Open the auxiliary water tank cover and add coolant up to the liquid level line.
5. Reattach the coolant reservoir cap to the coolant reservoir decorative cover.

Coolant main reservoir cap

⚠ATTENTION

• If water needs to be added, only distilled water can be used as a temporary substitute. Other types of water may cause adverse effects such as corrosion of the engine cooling system.

⚠ATTENTION

· Check to ensure that all pipes and clamps are properly assembled. Remove the bolts from the right-side water inlet, unscrew the water inlet cap, and slowly add antifreeze to the inlet; start the motorcycle and let it idle, giving it a little throttle at around 3000 rpm. If the liquid level drops, continue to add antifreeze. Once the water temperature reaches about 90°C and the exhaust is nearly complete, fill the water inlet with antifreeze before putting the cap back on, and reassemble the water inlet assembly back to its original fixed position.

Engine coolant (antifreeze)

The coolant (antifreeze) suitable for aluminum radiators is a mixture of coolant (antifreeze) concentrate and distilled water in a certain proportion. If the outdoor temperature has not been reached below the freezing point of the coolant (antifreeze), it can be used. When adding or replacing the coolant (antifreeze), please use a coolant (antifreeze) based on ethylene glycol and suitable for aluminum radiators.

⚠DANGER

· Swallowing or inhaling coolant (antifreeze) can be harmful to the body. When using, do not eat, drink, or smoke. After each operation, thoroughly wash hands, face, and any exposed skin. If swallowed, contact a poison control center or hospital immediately; if inhaled, move to a ventilated area with fresh air immediately; if splashed in the eyes, rinse the eyes with a large amount of running water and seek medical attention promptly. Keep children and pets away from coolant (antifreeze).

Coolant change

The coolant should be replaced regularly according to the regular maintenance table in the user manual. Please give this work to ZONTES dealer to replace the coolant.

Air cleaner

The air filter should be replaced regularly according to the regular maintenance table in the user manual. Please give ZONTES flagship store or dealer to replace the air filter.

Check the air filter

The air filter is located on the inside side of the left enclosure panel. If the air filter is blocked by dust, it will increase the intake resistance, decrease the output power, and increase the fuel consumption. Follow the steps to check the clean air filter.

⚠ WARNING

· Under normal circumstances, every 10000km need to replace or maintain the air filter element, the air filter is equipped with rapid maintenance function, rapid maintenance can continue to travel 4000km and then continue to maintain or replace the filter element.

· If you drive in dusty conditions, you should increase the frequency of cleaning or replacing the filter element.

· It is dangerous to run an engine without an air filter.Without the obstruction of the internal filter element of the air filter, the engine flame will be reversely sprayed from the engine to the air filter intake chamber. Dirt can get inside the engine and cause damage to the engine. Do not run the engine without an air filter element.

1.For more details, see the official website for the seat cushion, fuel tank, and disassembly videos.

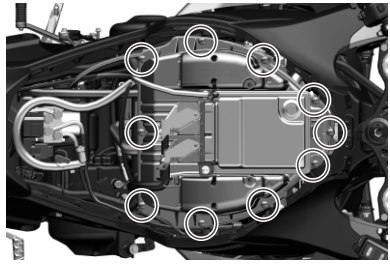

2. Remove 10 screws and take off the cover of the air filter.

3. Remove the filter cartridge (Note: See the official website video for detailed instructions).

⚠ATTENTION

·Observe the filter element after it has been removed, and use a high-pressure air gun to blow out contaminants from the clean side. If there is severe contamination or damage, be sure to replace the filter element.
·Install the whole motorcycle in the reverse order.

⚠ATTENTION

·If the air filter element is not installed in the correct position, dust will bypass the filter element and enter the engine, which will damage the engine. Make sure the filter element is installed in the correct position. In addition, when washing the motorcycle, do not let water enter the air filter. If water enters the air filter, it can be drained by unplugging the oil accumulation pipe. Make sure there is no water in the air filter before using the motorcycle.

Oil drift pipe

The oil accumulation pipe of the air filter should be checked according to the scheduled maintenance table specified in the user's manual, and waste oil should be regularly checked and discharged. Please leave this task to Zontes flagship store or the dealer to check the condition of the air filter oil accumulation pipe.

1.The position shown in the figure is the oil accumulation pipe of the air filter. Use needle-nose pliers to remove the circlip, pull out the plastic plug, let out the waste oil, and after finishing, reinstall it back to its original state in the reverse order.

Engine idle check

Check the engine idle speed, and if necessary, please visit Zontes dealer for inspection and adjustment.

Engine idle speed: 1500±100 r/min

Check the free play of the throttle

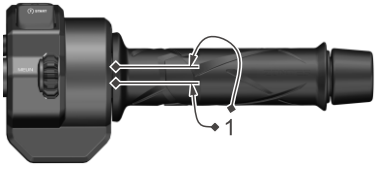

1.Throttle grip free gap

Throttle grip free gap: 2.0-4.0mm

Adjust brake handle Angle

NS

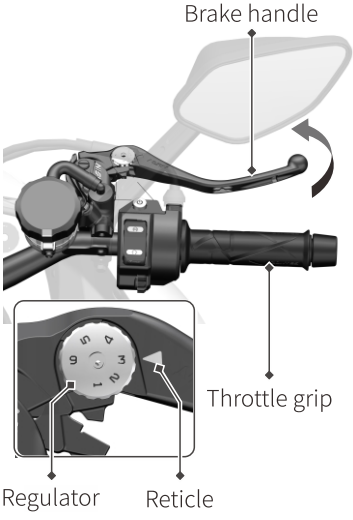

BRM

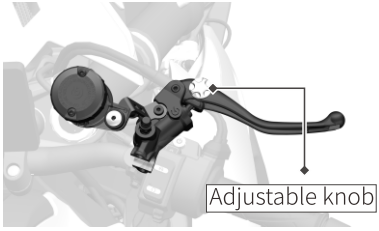

NS: Rotate the regulator, while simultaneously pushing the brake lever forward to the desired position, until the number on the regulator is aligned with the mark.

BRM: Push the front brake lever forward towards the motorcycle body, while simultaneously turning the adjustment knob. Release the front brake lever and check if the gap is convenient for operating the front brake lever. Turning the adjustment knob clockwise increases the gap between the front brake lever and the handle.

After adjustment, check whether the brake lever functions properly before riding.

Check the gap of the brake handle

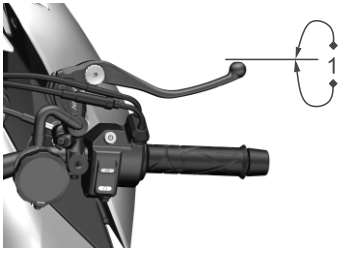

The brake handle has no free play. If there is free play, please take it to the flagship store of Zontes or a dealer to check the braking system.

⚠DANGER

·When operating the brake handle, if there is a soft or sponge-like feeling, it indicates that there is air in the liquid brake system. Please take it to an authorized dealer or flagship store to have the air purged from the brake system before riding. If there is air in the brake system, it will reduce braking effectiveness, potentially causing the motorcycle to lose control and result in an accident.

Check the free clearance of the clutch handle

As shown in the figure, measure the free gap of the clutch handle.

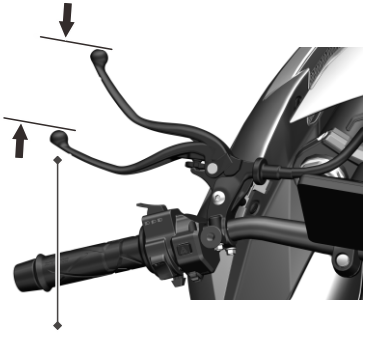

Free itinerary

Clutch handle free itinerary:

10-15mm

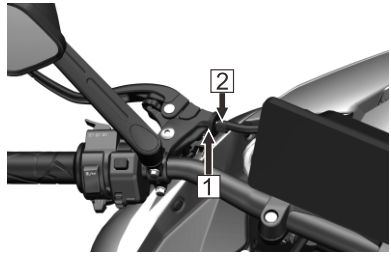

Regularly check the attention of the clutch handle when the gap is needed, adjust according to the following procedures:

1.Remove the nut protection cap.
2.Loosen the locking nut 1.
3.Rotate adjustment nut 1 to make adjustments.
4.Tighten the locking nut 2.

(Note: Check the clutch cable for any bends or damage. If necessary, please have it replaced at an authorized service center; use commercially available cable lubricant to lubricate the clutch cable to prevent premature wear and corrosion.)

⚠ATTENTION

·If you cannot achieve the specified free gap mentioned above, or if the clutch cannot operate, please visit the Zontes flagship store or a dealer to check the clutch.

·Incorrect free travel adjustment can cause premature wear of the clutch.

Side stop bracket

Side bracket

When the side parking stand is raised, if the clutch handle is not firmly held and the transmission is not in neutral, the side parking stand engine cutoff switch will cut off the power, causing the engine to stall.

⚠ATTENTION

· Check that the side supports operate freely. If the side bracket operation is stiff or "squeaky", clean the pivot area and lubricate the pivot bolt with clean lubricating oil.
· Check the spring for damage or loss of elasticity.

Shift level

The motorcycle is equipped with a six-speed gear transmission, press down or up the shift lever to change gear, please reduce the speed or increase the engine speed before changing to the lower gear; Increase the speed or reduce the engine speed before switching to higher gear. This prevents unnecessary wear on drivetrain components and rear tires.

⚠WARNING

·When the position is in neutral and the neutral indicator is on, slowly release the clutch handle to confirm whether the position is really in neutral.

Pedal

Check if the pedal rotates smoothly. If it is not smooth or there are unusual sounds when rotating, please maintain the pedal using the method shown in the picture below.

1. Use a spray with rust removal and lubrication functions to clean the stains in the circled area in the picture below.
2. While trying to rotate the pedal, aim the spray at the position of the steel ball to rinse it until the pedal can be normally retracted and released.

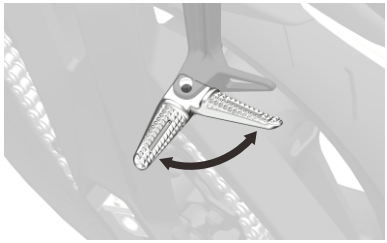

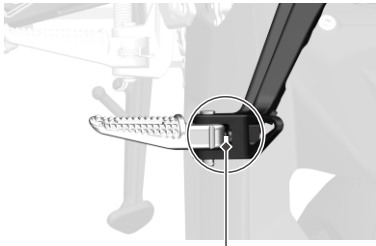

Steel ball

Fuel tank cap

The fuel tank is located in front of the seat cushion. When opening the fuel tank cap, ensure that the engine shut-off switch is in the off position. The fuel tank cap can only be opened after the motorcycle's electrical system is powered on and the instrument panel is activated. Lift the small cover to open the fuel tank cap.

Please ensure that the fuel tank is closed every time you lock the car and leave the motorcycle.

Fuel type:

Unleaded gasoline only

Fuel octane rating:

Your motorcycle is designed to use 95 or more Designed for a high research octane number (RON).

Fuel tank capacity

16L (Oil consumption：5.0 L/100km)

⚠ DANGER

·· Do not overfuel, so as not to spill the fuel to the high-temperature engine. The height of the oil level should not exceed the bottom of the fuel tank oil port, otherwise the fuel will overflow after thermal expansion, and will damage the motorcycle parts.

· Turn off the engine when adding fuel, make sure the flameout switch is off, and do not approach the open flame.

· Take some precautions when adding fuel, otherwise it will cause fire or inhale fuel steam. When refueling, do it in a ventilated area. Make sure the engine is turned off, avoid fuel spills, prohibit open flames, and ensure that there are no heat sources or fire sources around. Avoid inhaling fuel vapor. Keep children and pets away when filling up with fuel.

⚠ATTENTION

· Do not wash the fuel tank cover with high pressure water when washing the motorcycle to avoid water entering the fuel tank.
· If the fuel tank cap is stuck and cannot be opened, press it down hard, and try to open it after the vehicle is shut down and restarted.
· Do not touch the muzzle of the oil gun to the bottom shell of the fuel tank when adding fuel to avoid damage to the fuel tank and oil leakage.

Adjust the front suspension system

Spring preload adjustment

The spring pre-tension adjustment knob can be rotated using a 14mm socket wrench. The standard position is to turn the knob counterclockwise all the way and then rotate it clockwise four circles.
The adjustment range for the spring pre-tension is 10 turns; turning clockwise increases the spring pre-tension (makes it harder), while turning counterclockwise decreases the spring pre-tension (makes it softer).

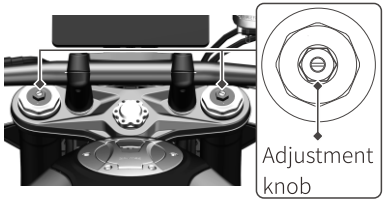

⚠ATTENTION

·Do not turn the adjustment knob beyond its limit, and the preload of the left and right shock absorbers should be adjusted to the same position.

Compression damping adjustment

The front shock absorber compression damping adjustment knob can be rotated using a flathead screwdriver, with a total adjustment range of 4 turns. The standard position is to turn the knob all the way clockwise, then turn it counterclockwise by 1 turn. Rotating clockwise increases compression damping (makes it harder), while rotating counterclockwise decreases compression damping (makes it softer).

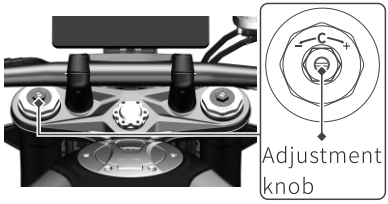

⚠ATTENTION

·Do not over-tighten the adjustment knob beyond its limit.

Restored damping adjustment

The rebound damping adjustment knob for the front shock absorber can be rotated using a flathead screwdriver. The adjustment range is 4 turns. The standard position is to turn the knob fully clockwise and then counterclockwise for 1.5 turns. Turning the knob clockwise will increase the rebound damping (making it stiffer), while turning it counterclockwise will decrease the rebound damping (making it softer).

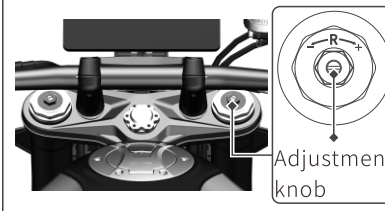

⚠ATTENTION

• Do not turn the adjustment knob beyond its limit.

Adjust the rear suspension system

Rear shock absorber recovery damping adjustment knob

The rear shock absorber rebound damping adjustment knob can be rotated with a flathead screwdriver, offering 62 adjustment levels. Since the damping force needs to be set within a fixed range upon delivery to ensure shock absorber performance, each shock absorber has been tested and adjusted accordingly. Therefore, the initial position of the damping adjustment knob is not fixed. It is recommended to draw a marking line near the knob with a marker pen first. Before each adjustment, return the knob to its factory position (align with the marking line) before proceeding with further adjustments.
Rotating the knob clockwise increases the rebound damping (making it stiffer), while rotating it counterclockwise decreases the rebound damping (making it softer).

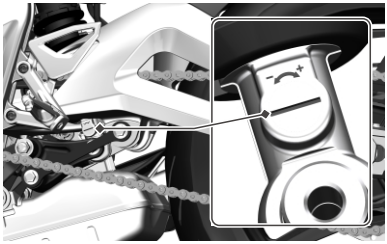

Spring preload force

The spring preload can be adjusted by rotating the adjuster with a special wrench. Turning the adjuster downwards increases the spring preload (making it stiffer), while turning it upwards decreases the spring preload (making it softer).

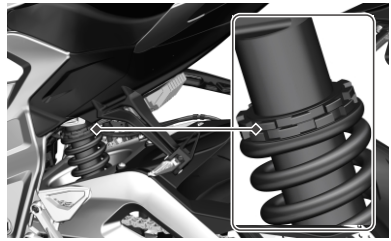

⚠ ATTENTION

·Do not rotate the adjuster beyond its limits.
·The rear shock absorber damping unit contains high-pressure nitrogen gas. Do not attempt to disassemble, repair, or improperly dispose of the damper.

Suspension Adjustment Recommendations

	Function settings	Riding alone	Carry passengers
Front suspension	Preload	4 turns (10 turns in total)	4 turns
	Restoration damping	2turns (4 turns in total)	2 turns
	Compression damping	1 turn (4 turns in total)	1 turns
Rear suspension	Restoration damping	12gears (of 62)	8 gears
Remark	·The spring preload of the front suspension is the number of turns clockwise from the full counterclockwise position, clockwise to increase the preload and counterclockwise to decrease the preload. ·The damping force of the front and rear suspensions is the number of counterclockwise turns from the fully clockwise position, clockwise to increase the damping force and counterclockwise to decrease the damping force. ·The factory damping gear of the rear shock absorber is not consistent, and the factory gear number of the vehicle should be recorded before adjustment. ·The spring pre-tightening force of the rear shock absorber shall not be adjusted at will, otherwise the vehicle may be out of control. ·The first 1000 km of the vehicle mileage is the running-in period of the suspension system, during which it is recommended not to adjust. ·The above is for reference only, please adjust according to the specific situation.		

Transmission chains

This model is equipped with a circulating transmission chain made of special materials. When it is time to replace the transmission chain, please let flagship store or dealer of Zontes to deal with. Check and adjust the transmission chain of the motorcycle every day before driving. Follow the method below to check the maintenance.

⚠DANGER

·In order to ensure safety, the inspection and adjustment of the transmission chain should be done in advance before driving.

Check the transmission chain

When checking the transmission chain, check for the following problems:

- Loose pin shaft.
- Whether the gear teeth are broken or damaged.
- Links that do not rotate flexibly.
- Excessive wear.
- The chain is adjusted improperly, and the left and right scale marks of the rear flat fork are inconsistent.
- Dry, heavily rusted or heavily soiled.

Whether the chain has reached the end of its service life.

⚠WARNING

·If you find any of the above problems, please contact the flagship store or dealer of Zontes for repair.

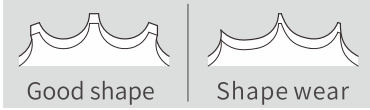

⚠ATTENTION

·When inspecting or replacing the transmission chain, the wear of the main and slave drive sprockets and the rear flat fork wear block should be checked, and they should be replaced at the same time if necessary.

Cleaning and lubrication of transmission chains

Regularly clean and lubricate the transmission chain according to the following method:

1. Remove dirt and dust from the chain.
2. Wash the chain with sealing chain cleaner or water and mild detergent, and use a fine soft brush to clean the dirt and dust on the surface of the oil seal.
3. Wipe off water and mild detergent and dry the chains.
4. Use special chain oil for motorcycle sealing chains to lubricate oil seals, rollers and inner and outer chain plates.

5. After fully lubricating the chain, wipe off the excess chain oil and let it stand for more than half an hour to allow the chain oil to fully penetrate and lubricate.
6.Keep the chain lubricated.

Adjustment of the transmission chain

Adjust the slack of the transmission chain to the appropriate range.
Increase the frequency of adjustment of the transmission chain according to the driving conditions.

⚠ WARNING

·The slackness of the drive chain is too great. If the chain comes off, it could damage the engine, or the rear swingarm could get cut and damaged by the excessively loose chain moving at high speed, leading to deformation or breakage. Please check and adjust the chain slackness when using the motorcycle.

Check the tightness of the transmission chains

Adjust the slack of the transmission chains to the appropriate range. Check the chain tightness before each driving and adjust it if necessary.

1. Support the whole vehicle with the main support.
2. Shift the gearbox to neutral.
3. Measure the tightness of the transmission chains as shown in the figure.

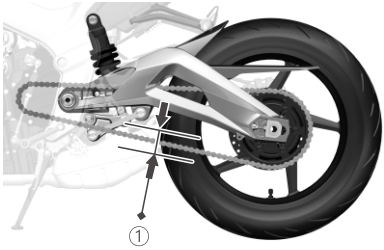

①Transmission chain tightness

Drive chain tightness:
20-30mm

4.The tightness of the transmission chain is incorrect, and it is adjusted according to the following procedure.

Adjust the tightness of the transmission chain

Remove the latch with a vise and loosen the rear axle bolt with a No. 30 wrench or sleeve.

2. Use a 13# open-end wrench to loosen the fixing nut.

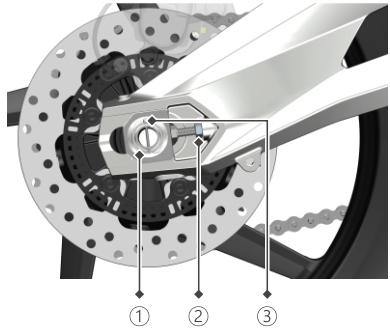

①Rear axle nut
②Fixing nut
③Latch

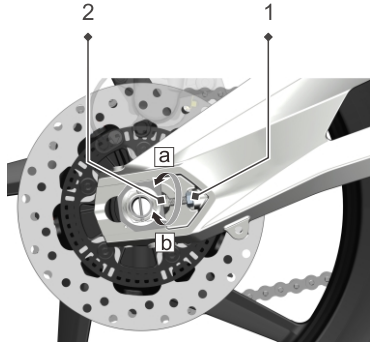

Drive chain tightness adjustment bolts

To tighten the drive chain, rotate the drive chain tightness adjustment bolt on the rocker arm in the direction (a). To loosen the tight drive chain, rotate the drive chain tightness adjustment bolt on the rocker arm in the direction (b) and push the rear wheel forward.

⚠WARNING

•Make the drive chain achieve the appropriate relaxation (20-30mm). At the same time, in order to ensure that the front and rear wheels are in a straight line, the scale plates on the left and right sides are adjusted to the same position as the scale mark on the rear flat fork.

3. After completing the adjustment, fix the nut and the rear axle nut, install the latch into the corresponding hole, and bend the latch at least 120 degrees with a vise.

Rear axle nut locking torque
120-130N.m

⚠WARNING

•The transmission chains of this motorcycle is made of special raw materials. It is highly recommended to use our oil seal chains for the replacement of transmission chains. If the strength is too low or the quality of other transmission chains is poor, the broken chain may damage the vehicle or cause personal injury.After the oil seal chain is worn and stretched to its service life, one or two sections can not be removed for riveting.The fatigue life of the chain is seriously exceeded, and the broken chain may damage the vehicle or cause personal injury.

Check the chain life

The normal maintenance service life of the oil seal chain is 10,000 to 15,000 kilometers, and after the wear is extended to the service life, please replace the chain in time:

1.It is recommended to replace the original genuine 525 oil seal chains;

2.When using the open oil seal chain with union joint, you need to use special tools to rivet, before riveting, you need to evenly apply special lubricating oil to the pin shaft oil seal. The oil seal and chain link need to be clean and free of debris. When riveting the expansion hole, it is recommended to rivet the expansion hole many times. The pin shaft hole can not be broken or cracked. The size of the hole must ensure that the chain link at the riveting place can rotate flexibly and the outer chain plate will not deviate or fall off in normal riding.

⚠WARNING

•If the anti-wear block of the rear fork fails, the chain moving at high speed will not only cut and damage the rear fork, but also damage the chain at the same time. The rear fork or chain breakage may damage the vehicle or cause personal injury.

Check the anti-wear block of the rear fork

1.When cleaning the oil seal chain every 500-1000km, be sure to check the surface A and surface B of the boss on the anti-wear block of the rear fork.When there is a relatively deep groove of at most 1mm at the place where the B side is contacted by the inner and outer chain plates of the chain, the rear fork anti-wear block must be replaced with a new one to avoid the rear fork anti-wear block from being worn through by the chain.

2. When replacing the new oil seal chain, the wear of the rear fork anti-wear block must be checked. If the rear fork anti-wear block is worn to a very thin point by the chain, and there is a 1mm groove in the contact between the inner and outer chain plates of the chain, a new rear fork anti-wear block must be replaced to avoid the rear flat fork wear block being worn through by the chain and damaging the rear flat fork.

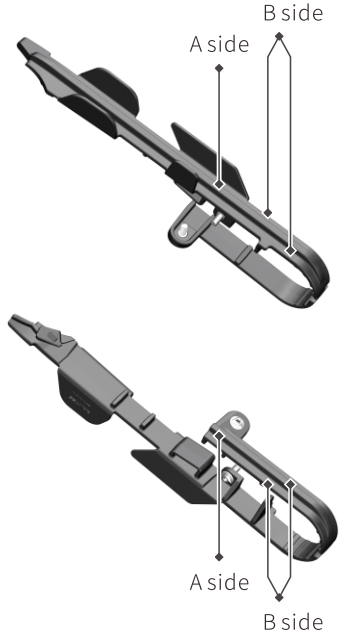

Tires (Inspection/ Replacement)

Check your tire pressure

Check your tire pressure before each unpaved ride and when you return to the road from your unpaved ride. If you're only riding on the road, check the pressure at least once a month or when you notice a lack of tire pressure. Check the tire pressure after the tire has cooled down.

Recommended tire pressure:

Front wheel：
250kPa

Rear wheel：
250kPa

Injury examination

Inspect the tire for cuts, cracks, exposed fabric or tire lines, or nails or other foreign objects embedded in the side or tread of the tire. Also check the sidewall of the tire for any abnormal bulges or bulges.

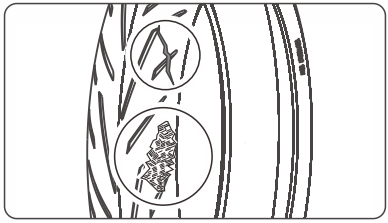

Abnormal wear and tear examination

Inspect the contact surfaces of the tires for signs of abnormal wear.

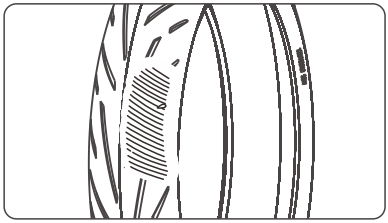

Check the wheel grain depth

Check the tread wear indicator markings. If the wear indication markings are visible, replace the tires immediately. In order to ride safely, the tires need to be replaced when the minimum wear depth is reached.

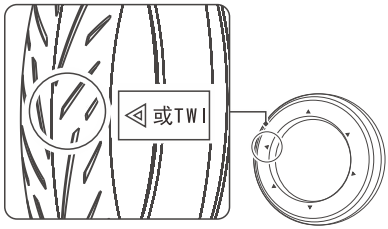

Replace the tires

Please have your tires replaced at an authorized repair shop.
For recommended tires, tire pressures and minimum tread depth, please refer to "Technical Specifications".
Whenever you change your tire, follow these guidelines:

- Use recommended tires or equivalent products of the same size, construction, speed class and load capacity.
- After the tires are installed, use the original ZONTES original balance weight or equivalent equipment to balance and position the wheels.

· Do not install an inner tube inside the tubeless tire of this motorcycle. Excessive heat can cause the inner tube to burst.
· This motorcycle can only use tubeless tires. Rims are designed to use tubeless tires, and when accelerating or braking hard, the tires with inner tubes can slide on the rims, causing rapid air bleats.

⚠ DANGER

· Installing unsuitable tires can affect handling and stability, which can lead to accidents that can injure you or even kill you.
· Be sure to use the size and type of tire recommended in this "User Manual".

Check the rims and valves

Before each ride, check whether the rim is damaged and whether the spokes are loose. In addition, the valve position should also be checked.

⚠ WARNING

· The use of over-worn or improperly inflated tires can lead to accidents, resulting in serious injuries or deaths.
· Please follow the relevant tire inflation data and maintenance guidelines in the User Manual.

Wheel

Rim

To ensure the safe operation of motorcycles, it is necessary to ensure that the wheels are absolutely round. Wheel roundness may cause instability during high-speed driving and may lead to vehicle loss of control (the recommended maintenance work in the maintenance schedule does not require disassembling the wheels). The specific inspection is as follows:

Slowly rotate the wheel to check if it is "shaking". If it is found shaking, it indicates that the wheel frame is not round or not "absolutely" round. If the shaking is obvious, please have it repaired by a ZONTES authorized repair shop.

Brake

Check the brake fluid

1. Place the motorcycle vertically on a stable, flat surface.
2.Front wheel Check that the brake fluid storage tank is level and that the fluid level is between the lower and upper limit marks.Rear wheels Check that the brake fluid storage tank is level and that the fluid level is between the lower and upper limit marks.
3.If the brake fluid level in any storage tank is below the lower limit level mark, or the free travel of the brake lever and pedal exceeds the limit, brake pad wear must be checked.If the brake pad is almost not worn, there may be leakage. Please send it to ZONTES Special Repair Shop for repair.

NS

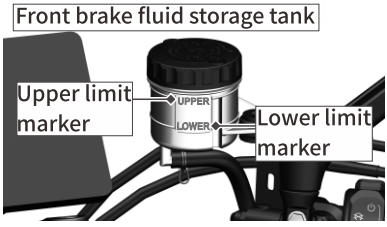

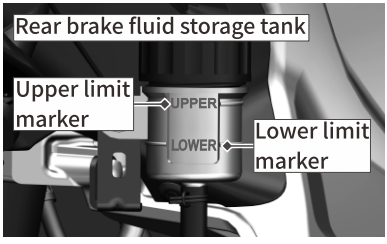

BRM

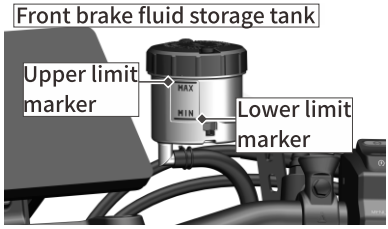

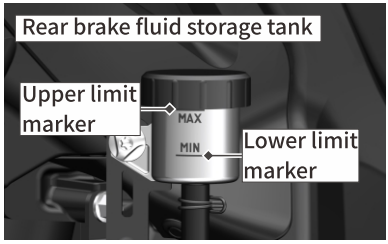

Check the brake pad

Check the condition of the brake pad wear indicators. If the front wheel brake pads have worn down to the bottom of the indicator, they need to be replaced. If the rear wheel brake pads have worn down to the indicator, they need to be replaced.

Front disc brake caliper

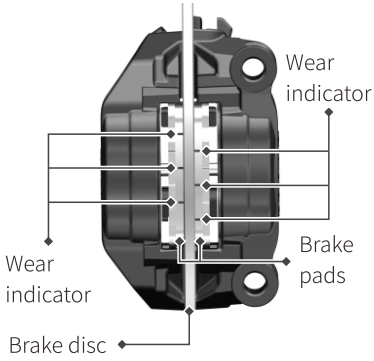

Rear disc brake caliper

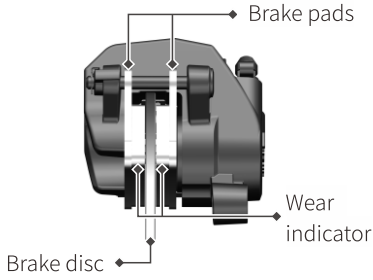

Adjust the brake light switch

Check that the brake light switch is working properly. If the switch reacts too slowly, hold the brake light switch and rotate the adjustment nut in a counterclockwise direction, and if the switch responds too quickly, rotate the adjustment nut in a clockwise direction.

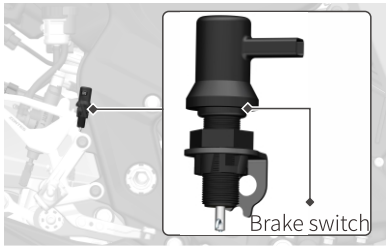

Lighting adjustment

Find the dimmer bolt at the bottom of the headlight, and turn the bolt counterclockwise against the arrow with an 8# open-end wrench to raise the light height, and vice versa to lower it.

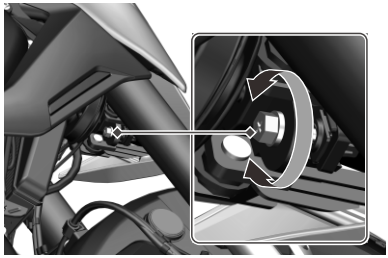

⚠ ATTENTION

· The height of the headlights being too high or too low can affect safe driving. The height of the lights should be properly adjusted based on the presence of passengers and changes in the driver's weight.

· It is strictly prohibited to adjust the light height while riding. It is recommended to find a flat and straight road about 150 meters long at night, provided it does not affect traffic safety, to make adjustments.

Installed electrical components

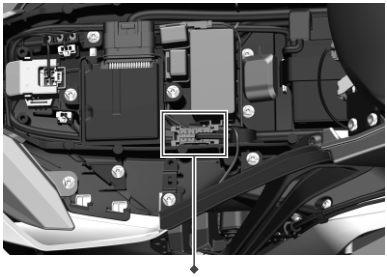

OBD diagnostic interface

The OBD diagnostic interface is located beneath the cover of the electrical component box; it can be seen after removing the rear seat cushion, main seat cushion, and the cover of the electrical component box, referring to (6-10).

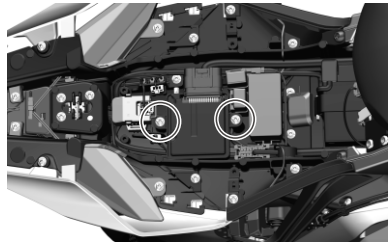

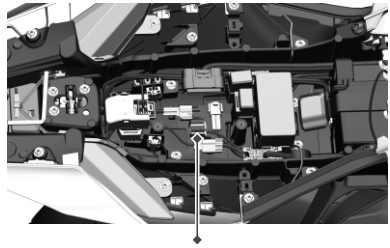

Immobilizer plug

The anti-theft device plug is located below the PKE. Use a T25 torx wrench to remove 2 M6 bolts and take off the PKE for visibility.

⚠WARNING

· It is prohibited to draw power directly from the positive and negative terminals of the battery for electrical devices such as GPS and fog lights.

· It is prohibited to lay wires around the battery with electrical equipment.

· The installation of electrical equipment must be more than 300mm away from the electronic fuel injection ECU, relay combination, and PKE controller.

· Unauthorized modification and installation that do not meet the requirements are to be borne by the consumer.

· The total power of external electrical devices must not exceed 60W, and please do not use the spotlight when idling.

Fuse position

The insurance is located under the seat cushion. Press the 'SEAT' switch on the left hand to open the seat cushion. The main seat cushion and the cover of the electrical component box can be seen after removal.

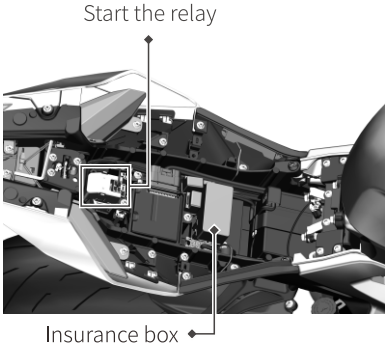

Fuse

The fuse and one spare fuse are located on the starting relay, LCM fuse, ECM fuse, normal power supply fuse, ABS motor fuse, ABS ECU fuse, oil pump fuse, starting fuse, ABS fuse, auxiliary fuse, other fuses and four spare fuses are located in the fuse box.

- The main fuse protects all circuits.
- LCM fuses protect LCM circuits.
- ECM fuses protect electrical devices such as ECM, ECM relays, and oil pump relays.
- Constant power supply insurance protection fan, instrument, immobilizer connector.
- ABS motor fuse protects ABS motor.
- ABS ECU fuse protects ABS ECU.
- Oil pump fuse protects oil pump circuit.
- Start the fuse to protect the starting circuit.
- ABS fuse protects ABS controller.
- Auxiliary fuse protection auxiliary components (position lights, turn signals, tail lights, brake lights, license plate lights, horns, overtaking lamp).
- Other fuses protect the off-hand handle switch (except faucet lock switches), meters, windshields, immobilizer joints).

⚠ DANGER

•Do not use other fuses other than the specified specifications or direct lapping, otherwise it will have a serious impact on the circuit system, and even cause fire or burn the vehicle, loss of engine power, which is very dangerous.

⚠ ATTENTION

• Pay attention to the selection of fuses with specified rated currents. Do not use substitutes such as aluminium or iron wire. If the fuse blows frequently for a short period of time, the electrical system is faulty. It should be sent to the maintenance unit immediately for maintenance.

Catalyst

Catalyst can effectively reduce the pollutants emitted by your motorcycle, protecting the environment we rely on; since the lifespan of the catalyst is designed with the premise of using unleaded gasoline under normal motorcycle operation, it is prohibited to use leaded gasoline in your beloved car, as lead can cause the reduction components of the catalyst conversion system to fail. The normal operation of the engine is also very important for the catalyst. If the engine has not been effectively ignited for a long time or does not have sufficient cooling, it can cause exhaust oil vapors to accumulate and burn at the catalyst, leading to overheating of the catalyst, which can permanently damage its conversion capability. It is prohibited to maintain high engine RPM for a long time while stationary.

Fault handling

The content of troubleshooting maintenance can help you find the cause of common issues.

⚠ WARNING

· Incorrect repairs and adjustments can damage the motorcycle without determining the cause of the failure. Such damage cannot be guaranteed in three packs. If you are not sure how to operate it correctly, please consult our repair unit.

· Before troubleshooting, consult the company's maintenance unit. The repair unit will try to solve it for you. If the engine won't start, follow the checks below to determine the cause.

Fuel system check

If the gauge engine fault indicator is illuminated, there is a problem with the fuel injection system.Send the motorcycle to the maintenance unit of the company.

Refer to the Engine Malfunction Lamp in the Instrumentation section to explain the meaning of the display.

The engine does not work

· Confirm that there is enough fuel in the fuel tank.

· The engine is started successfully. During operation, if the orange EFI fault signal light is on, it indicates that the EFI system is abnormal. Please contact our after-sales service shop to check the EFI system.

· Check whether the ignition system is normal.

· Check the idle speed.The correct idle speed is 1500 ± 100rpm per minute.

⚠ DANGER

Do not let the fuel flow all over the floor, and put it into the container.Do not allow fuel to approach the engine and muffler at high temperatures.When doing this check, keep away from smoke and fire, and do not approach any fire or heat source.

The engine is underpowered

When the engine power drops significantly or the maximum speed drops significantly, it may be that the fuel system is blocked and the engine does not work properly. Please immediately go to the dealer maintenance unit of our company for inspection.

⚠WARNING

· The blockage of the fuel system may be caused by the unclean gasoline.

· For a new vehicle or a vehicle running out of fuel, please do not turn on the flameout switch. Be sure to turn on the flameout switch after replenishing the fuel. Otherwise, the fuel pump will run idle without fuel, which will seriously affect the service life of the fuel pump.

Carbon deposit cleanup

In order to minimize carbon deposits, the following are recommended:

1. The vehicle rides for a long time or for a long time.For riding below 5,000 rpm, it is recommended to clean up the carbon deposits every 5,000 kilometers or every 6 months. If the vehicle is regularly ridden above 5,000 rpm and the vehicle heats up sufficiently, the carbon removal mileage can be extended to every 10,000 km or every 12 months.

2. The vehicle has the problem of difficulty in starting, and the spark plug should be removed in time to clean up, and the cylinder cleaning procedure should be carried out: the engine is in neutral, pinch the clutch handle, keep the throttle fully open for 3 seconds, and then press the start button for 3 seconds.

There are several ways to clean up carbon deposits:

1. Sweep the air to clean up the carbon deposit, during the riding process, when the conditions permit, appropriately increase the throttle to increase the engine speed to more than 7000, and the cumulative riding is not less than 2 minutes, which can effectively clean up the carbon deposit through high-speed sweeping.

2. Use regular big brand fuel treasure to clean up carbon deposits, add according to the instructions, but it is not recommended to use it frequently, frequent use may lead to damage to the fuel supply pipeline.

3.Use throttle body cleaner to clean up carbon deposits, remove the stepper motor from the throttle body, and the rest of the sensors shall not be disassembled by themselves, otherwise it will cause abnormal vehicle idling. Spray a small amount of throttle body cleaning agent inside the throttle body and around the valve plate, and clean the carbon deposits on the head of the stepper motor with a clean rag.

EFI precautions

1. Before installing the battery in the new motorcycle, it is necessary to check that the wiring harness plug-in of the EFI parts is firmly and reliable, including the installation of the oxygen sesor, and the gasoline has been added.
2. When installing the battery, you need to use tools to firmly install the positive and negative poles of the cable on the positive and negative poles of the battery, and do not twist them by hand.
3. Please keep the fuel in the tank not less than 3 liters, otherwise it will affect the normal operation of the EFI system, please replenish the fuel as soon as possible when the fuel volume is 1 bar or less than 1 bar.
4. When the battery is reinstalled, the whole vehicle is powered off during starting or riding, the battery is dormant and restarted, the idle speed is abnormal, and the insurance is replugged and unplugged, please pay attention to the individual hardware reset of the EFI, the steps are: open the electric door lock and the engine shutdown switch, support the main bracket and pinch the brake, start the engine and refuel to more than 3000rpm, release the throttle and then close the flame-out switch and the electric door lock, and power on after 5s.
5.The vehicle is left standing for a long time (the parking time is more than 3 hours), please make sure that the oil pump completes the pressure storage (that is, the whole vehicle is powered on, turn on the flame-off switch, and wait until the whining in the fuel tank stops) before starting.
6. If the engine still fails to sound after multiple starts, the cylinder may have been flooded, and the cylinder cleaning procedure is executed: open the throttle fully and press the start button for 3 seconds.
7.If the meter battery voltage flashes, it means that the battery voltage is too low, please charge the battery in time; Too low voltage may cause EFI parts to not work properly, unable to start or difficult to start, insufficient power, etc.

⚠ DANGER

· New motorcycles or fuel-depleted vehicles, please do not turn on the kill switch, be sure to turn on the stop switch after replenishing fuel, otherwise the fuel pump without oil idling will seriously affect the life of the fuel pump.

⚠ WARNING

Do not plug and unplug the cable plugs of individual parts at will, and do not clean the cable plugs of EFI parts with water.

⚠ATTENTION

· During engine operation, the fault light is not on, and the fault light flashes after the ignition is turned off, which is a historical fault and has no impact on the whole vehicle, and will disappear by itself in the future.

1.During the operation of the engine, if the EFI fault indicator of the instrument is on, it indicates that there is a fault in the EFI parts that needs to be eliminated.

You can directly read the fault code the fault information page in the instrument menu, or read the fault code in the ZONTES intelligent APP

ZONTES intelligent APP QR code

2.Instrument fault lamp extinguishing conditions:

Manual clearing of historical faults and ECU reset operation: power on the whole vehicle - turn the ignition switch on and off more than five times in a row (on-off as one). If the flame-out switch is turned on and the fault light is not lit, it means that the ECU has been reset successfully.

Use the diagnostic instrument to clear the fault code: After the vehicle is powered on, open the seat cushion, connect the diagnostic interface in the electrical box with the diagnostic instrument, and clear the fault code according to the operation steps of the diagnostic instrument.

⚠WARNING

·During the operation of the engine, the fault light is not lit, and the fault light flashes after the ignition is turned off, which is a historical fault and has no impact on the whole vehicle, and will disappear by itself in the future.

Fault codes

Serial numbe	Fault codes	Description of the fault code
1	P0118	Cylinder temperature sensor line high voltage/open circuit fault
2	P0117	Cylinder temperature sensor line low voltage fault
3	P0336	Crankshaft position sensor line signal interference failure
4	P0335	There is no signal failure in the crankshaft position sensor line
5	P2300	One Cylinder ignition coil short circuit to low voltage/open circuit fault
6	P2303	Two Cylinder ignition coil short circuit to low voltage/open circuit fault
7	P2306	Three Cylinder ignition coil "C" way to low voltage/open circuit fault
8	P0123	The throttle position sensor is short-circuited to a high voltage fault
9	P0122	The throttle position sensor is short-circuited to a low-voltage/open-circuit fault
10	P0459	The carbon canister solenoid valve wire is short-circuited to a high voltage fault
11	P0458	Canister solenoid valve wire short circuit to low voltage/open circuit fault
12	P0232	The oil pump relay is short-circuited to a high voltage fault
13	P0231	Oil pump relay short circuit to low voltage/open circuit fault
14	P1780	The fast displacement sensor fails
15	P0262	One cylinder injector short circuit to high voltage fault
16	P0261	One cylinder injector short circuit to low voltage/open circuit fault
17	P0265	Two cylinder injector short circuit to high voltage fault

Fault codes

Serial numbe	Fault codes	Description of the fault code
18	P0264	Two cylinder injector short circuit to low voltage/open circuit fault
19	P0268	Three injector short circuit to high voltage fault
20	P0267	Three cylinder injector short circuit to low voltage/open circuit fault
21	P0108	Air intake sensor line high voltage/open circuit fault
22	P0107	Air intake sensor line low voltage fault
23	P0113	The inlet temperature sensor line is faulty for low voltage
24	P0112	The inlet temperature sensor line is faulty for low voltage
25	P0132	One pre-cylinder oxygen sensor signal is short-circuited to high-voltage/open-circuit fault
26	P0131	One signal of the oxygen sensor in front of the cylinder is short-circuited to the ground fault
27	P0138	Two pre-cylinder oxygen sensor signal is short-circuited to high-voltage/open-circuit fault
28	P0137	Two signal of the oxygen sensor in front of the cylinder is short-circuited to the ground fault
29	P0152	Three pre-cylinder oxygen sensor signal is short-circuited to high-voltage/open-circuit fault
30	P0153	Three signal of the oxygen sensor in front of the cylinder is short-circuited to the ground fault

LCM function fault code

Serial numbe	Fault codes	Description of the fault code
1	9002	Spotlights open the way
2	9022	Fog lights open the way with white light
3	9032	The horn opens the way
4	9042	The cushion lock is open
5	9052	The brake light opens the way
6	9062	Low beam open circuit
7	9072	Fog lights open the way with yellow light
8	9082	Heated handlebar open circuit
9	9092	High beams open the way
10	90A2	The left light is open
11	90B2	The right light is open
12	90C2	The left turn signal is open
13	90D2	The right turn signal is overloaded
14	9003	Spotlights are short circuit
15	9023	Fog lamp white light short circuit
16	9033	The horn is short circuit
17	9043	Seat lock short circuit
18	9053	Brake light short circuit
19	9063	Short circuit in the low beam
20	9073	Fog lamp yellow light short circuit
21	9083	Heating handlebar short circuit
22	9093	Short circuit in high beams
23	90A3	The left light is short circuit
24	90B3	The right light is short circuit
25	90C3	Left turn signal short circuit
26	90D3	The right turn signal is short circuit

LCM key fault code

Serial numbe	Fault codes	Description of the fault code
1	A001	KEY1 Channel -【Channel 】Short circuit
2	A002	KEY1 Channel -【Channel 】Open Circuit
3	A011	KEY1 Channel--【Overtaking 】Short circuit
4	A012	KEY1 Channel--【Overtaking Key】Open Circuit
5	A021	KEY1 Channel--【High beam Key】Short circuit
6	A022	KEY1 Channel--【High beam Key】Open Circuit
7	A101	KEY2 Channel--【 ChannelKey】Short circuit
8	A102	KEY2 Channel--【 ChannelKey】Open Circuit
9	A111	KEY2 Channel--【Mode down Key】Short circuit
10	A112	KEY2 Channel--【Mode down Key】Open Circuit
11	A121	KEY2 Channel--【Mode Confirmation Key】Short circuit
12	A122	KEY2 Channel--【Mode Confirmation Key】Open Circuit
13	A131	KEY2 Channel--【Mode Up Key】Short circuit
14	A132	KEY2 Channel--【Mode Up Key】Open Circuit
15	A201	KEY3 Channel--【 ChannelKey】Short circuit
16	A202	KEY3 Channel--【 ChannelKey】Short circuit
17	A211	KEY3 Channel--【 ChannelKey】Open Circuit
18	A212	KEY3 Channel--【Right Turn Key】Open Circuit
19	A221	KEY3 Channel--【Steering Reset Key】Short circuit
20	A222	KEY3 Channel--【Steering Reset Key】Open Circuit
21	A231	KEY3 Channel--【Left Turn Key】Short circuit
22	A232	KEY3 Channel--【Left Turn Key】Open Circuit
23	A241	KEY3 Channel--【Horn Key】Short circuit
24	A242	KEY3 Channel--【Horn Key】Open Circuit
25	A251	KEY3 Channel--【Light Key】Short circuit
26	A252	KEY3 Channel--【Light Key】Open Circuit
27	A301	KEY4 Channel--【 Channel 】Short circuit
28	A302	KEY4 Channel--【 Channel 】Open Circuit
29	A311	KEY4 Channel--【Menu down Key】Short circuit
30	A312	KEY4 Channel--【Menu down Key】Open Circuit

LCM key fault code

Serial numbe	Fault codes	Description of the fault code
31	A321	KEY4 Channel--【Menu Confirmation Key】 Short circuit
32	A322	KEY4 Channel--【Menu Confirmation Key】 Open Circuit
33	A331	KEY4 Channel--【Menu Up Key】Short circuit
34	A332	KEY4 Channel--【Menu Up Key】 Open Circuit
35	0xA501	KEY6 Channel--【SEATKey】Short circuit
36	0xA502	KEY6 Channel--【SEATKey】 Open Circuit
37	0xA521	KEY6 Channel--【Danger Warning Light Key】 Short circuit
38	0xA522	KEY6 Channel--【Danger Warning Light Key】 Open Circuit

Key's open circuit faulty will not show individual, If a KEY channel or the internal sense resistor (33KΩ) of the KEY channel is not connected, it will directly alarm all open circuits in the channel .

Storage

Storage

If your motorcycle is not in use for a period of time and requires special maintenance, this requires some special materials, equipment, and technology. For the above reasons, it is recommended that you choose our company's maintenance unit to complete these maintenance work.

Motorcycle

Wash your motorcycle thoroughly. Park your motorcycle with a side parking rack and park it on flat ground. Turn the handlebar to the left, press and hold the red power-on button on the handlebar, the whole vehicle will be powered off, and the front lock will be automatically locked.

Fuel oil

The fuel from the fuel tank is discharged into the container by siphon or other suitable method.

Engine

1.Remove the spark plugs, pour a tablespoon of new oil into each spark plug hole, reinstall the spark plugs, and allow the engine crankshaft to spin a few times.
2.Drain the oil thoroughly and add the new oil.
3.Cover the air intake of the air filter and the exhaust of the muffler with a rag containing new oil to prevent moisture from entering.

Battery

1.Refer to the section on batteries to remove the battery.
2.Clean the surface of the battery with neutral soapy water and remove rust from the terminals and wiring joints.
3.Store the battery indoors above zero degrees Celsius.

Maintenance

Please use our company exclusive charger to charge the battery every three months.

Tire

Adjust the tire pressure to the specified air pressure.

Motorcycle

1.Spray the rubber protectant on the surface of the resin and rubber parts.
2.Spray anti-rust paint on the surface of the part without surface treatment.
3.Apply the painted surface with automotive wax.

Re-enable the method

Re-enable the method

• Clean the motorcycle thoroughly.
• Wipe to remove the air filter inlet and muffler exhaust port.
• Drain the engine oil. According to the relevant content of this user manual, replace the oil filter and add new engine oil.
• Remove the spark plug. Let the engine turn a few times. Reinstall the spark plugs.
• Reinstall the battery by referring to the section on batteries.
• Confirm the motorcycle is lubricated normally.
• Perform the inspection in accordance with the section on pre-driving inspection in this user manual.
• Start the motorcycle according to the relevant contents of this user manual.

Prevent corrosion

It is important to take good care of the motorcycle and avoid rust so that it will look like a new car after many years.

Key points for preventing corrosion

Factors that lead to rust damage: accumulation of salt, dirt, moisture, chemicals on salty roads. The surface of the painted part is damaged by small stones or gravel, or scratched by bumps. Salty roads, sea breezes, industrial pollution, and high humidity can all contribute to corrosion.

How to prevent rust

1.Clean your motorcycle at least once a month. Try to keep your vehicle clean and dry.

2.Remove dirt from the surface of the motorcycle. Substances such as salt, chemicals, asphalt, tree sap, bird droppings, and industrial emissions from salty roads can damage your motorcycle. Remove these contaminants as soon as possible. If it is difficult to clean with water, clean it with a detergent. The detergent must be used in accordance with the detergent product requirements.

3.Clean up the damage to the car as soon as possible. Carefully inspect the surface of the motorcycle's painted parts for damage. If you find any burrs or scratches, repair them immediately to avoid further damage. If burrs and scratches run through the entire surface of the part, please have it repaired by a repair unit designated by the company.

4.Keep the motorcycle in a dry, ventilated place. If you often wash your motorbike in the garage and you park inside, the garage can get wet. High humidity increases rust. If the air is not circulated, wet motorcycles can rust even in hot environments.

5.Cover the motorcycle. Avoid the noon sun on the motorcycle, if it is exposed to the paint, plastic parts will be discolored, and the instrument will fade. The use of a high-quality, breathable cover protects the motorcycle from ultraviolet rays in the sun and reduces the deposition of dirt and air pollution on the motorcycle. Our dealers can help you choose the right cover for your motorcycle.

Clean the motorcycle

Clean the motorcycle according to the following instructions:

Regular and thorough cleaning of motorcycles can not only make them look shiny but also improve their regular performance and prolong the lifespan of many components. Washing, cleaning, and polishing also give you more opportunities to check the condition of your motorcycle more frequently. When riding by the seaside or in the rain, be sure to wash your motorcycle, as salt and moisture can corrode metal parts.

⚠ WARNING

•In cold weather, when de-icing the roads with salt, it is important to thoroughly wash the motorcycle to remove road salt and avoid corrosion. Wheel spokes, bolts/nuts, and other unpainted metal parts are particularly susceptible to corrosion from road salt. After washing and drying the motorcycle, apply a corrosion protection product to all vulnerable parts.

Cleaning

Wait for the engine, muffler, brakes, and other high-temperature components to cool down before cleaning.

1.Use a low-pressure hose to thoroughly rinse the motorcycle, removing loose dirt.

2.If necessary, use a sponge or soft cloth dipped in a gentle cleaner to remove the dirt on the surface.
・Be particularly careful when cleaning the windshield, headlight lenses, panels, and other plastic components to prevent scratches. Please avoid direct water entering the air filter, muffler, and other electrical parts.

3.Thoroughly rinse the motorcycle with sufficient clean water and wipe it dry with a clean soft cloth.

4.After drying the motorcycle, lubricate all moving parts.
・Ensure that no lubricant is spilled on the brakes or tires. Brake discs, brake pads, brake drums, and brake shoes contaminated with oil will have significantly reduced braking performance, which could lead to accidents.

5.After cleaning and drying the motorcycle, lubricate the drive chain immediately.

6.Waxing can prevent corrosion.
・ Avoid using products that contain strong detergents or chemical solvents. These substances can damage the metal parts, paint layers, and plastic components of the motorcycle.
・Do not wax the tires and brakes.Maintenance and Storage
・ If your motorcycle has parts with a matte finish, do not apply wax to these matte surfaces.

⚠ATTENTION

・Do not use alkaline or acidic cleaners to wash the motorcycle, and do not use gasoline, brake fluid, or other solvents that could damage the motorcycle. Only use a soft cloth and lukewarm neutral detergent for cleaning.
・Avoid using the following cleaning agents to clean the paint surface of motorcycle covers.
・Engine surface cleaners (engine head water), range hood cleaning solutions, bathroom cleaners, carburetor cleaners, chain cleaning agents, and cleaning products containing bleach should be avoided as much as possible from contact with disc brake oil, strong acids, and strong bases to prevent corrosion.

⚠DANGER

・It is very dangerous to ride a motorcycle with wet brakes. Wet brakes cannot provide the same braking force as dry brakes, which can lead to accidents. After washing the motorcycle, test the braking system at low speed. If necessary, operate the brakes a few times to dry the brake pads.

Cleaning Precautions

Please follow the guidelines below when cleaning:

1.Do not use a high-pressure water gun:

•High-pressure water guns can damage moving parts and electrical components, making them irreparable.

•Moisture from the intake may be sucked into the throttle body or enter the air filter.

2.Do not rinse the muffler directly with water:

•Water entering the silencer may result in inability to start and rusting of the silencer.

3.Dry the brake：

•Water can reduce braking performance. After cleaning, intermittently operating the brakes at low speed will help dry them.

4.Do not rinse under the seat cushion directly with water.：

•Water entering the storage box under the cushion can damage your documents and other items.

5.Do not rinse the air filter directly with water：

•If the air filter gets wet, the engine may not start.

6.Do not rinse near the headlight directly with water：

•After washing or when driving in the rain, the internal lens of the headlight may temporarily fog up. This will not affect the functionality of the headlight.

•However, if you find a large amount of water or ice accumulated inside the lens, please take it to Zontes flagship store or dealer for inspection.

8.Do not wax or polish on a matte finish：

•Use a soft cloth or sponge, plenty of water, and a mild cleaner to clean matte painted surfaces. Wipe dry with a clean soft cloth.

Please follow the guidelines below after cleaning:

1.Use a towel or absorbent cloth to dry the motorcycle.

2.Models with drive chain: Wipe the drive chain dry and lubricate it to prevent rust.

3.Spray all metal parts with anti-corrosive agent. Warning! Do not apply the anti-corrosive agent or oil mist on the seat cushions, handlebars, footrests, or tires. Otherwise, these parts may become very slippery, leading to the loss of motorcycle control. Before operating the motorcycle, please thoroughly clean the surfaces of these parts.

4.Rubber parts, plastic parts, and plastic parts without baked paint should be maintained using appropriate maintenance products.

5.Use a non-abrasive wax or a motorcycle-specific spray to wax all painted surfaces.

6.After the cleaning is completed, start the engine and let it idle for several minutes to dry up the remaining moisture.

7.If the headlight lens fogs up, start the engine and turn on the headlights to remove the moisture.

8.The motorcycle can only be stored or covered after it is completely dry.

⚠WARNING

•Contaminants remaining on the brakes or tires may cause the motorcycle to lose control.
Ensure there is no lubricating oil or wax on the brakes or tires.
If necessary, clean the tires with warm water and a neutral detergent.
If necessary, use brake disc cleaner or acetone to clean the brake discs and brake pads.
Test the braking performance and cornering characteristics before riding at higher speeds.

Exhaust pipe and Muffler

The exhaust pipe and muffler are made of stainless steel, but they may also get dirty due to mud or dust.

You can use a damp sponge with kitchen liquid abrasive to remove mud or dust, then rinse thoroughly with clean water. Wipe dry with a soft towel.

If necessary, you can use a commercially available fine-textured compound to remove burn marks, and then rinse it off in the same way you would remove mud and dust.

If the exhaust pipe and muffler are painted, do not use commercially available abrasive kitchen cleaners. Use a neutral detergent to clean the paint surface of the exhaust pipe and muffler. If you are not sure whether the exhaust pipe and muffler are painted, please have them checked at a dealer or Zontes specialized service center.

⚠WARNING

•Although the exhaust pipe is made of stainless steel, it can still rust. Once you notice any signs, please remove all traces and dirt immediately.

Aluminum components

Aluminum can corrode when in contact with dirt, mud, or salt. Regularly clean aluminum parts and follow the guidelines below to prevent scratches：

- Do not use hard brushes, steel wool, or other abrasive cleaning items.
- Do not drive or scrape along the curb.

Panel

Follow the guidelines below to prevent scratches and damages：

- Gently clean with a sponge and enough water.
- Clean with a diluted degreaser and rinse thoroughly with plenty of water to remove stubborn dirt.
- Avoid getting gasoline, brake fluid, or degreaser on the instruments, windshield, dashboard, or headlights.

Transportation

The fuel must be drained before transporting the motorcycle. Fuel is extremely flammable and can cause explosions under certain conditions. When draining, storing or refilling fuel, open flames are strictly prohibited and the operation must be performed in a well-ventilated place after the engine is stopped. The order of draining fuel is as follows.

1. Stop the engine and turn off the electric door lock switch.
2. Use siphoning or other appropriate methods to drain the fuel in the fuel tank into a suitable container.

⚠ WARNING

• When transporting a motorcycle, be sure to drain all the fuel from the fuel tank. Transport the motorcycle in normal driving condition to prevent fuel leakage.

Number

The frame and engine numbers are unique and are used to identify your motorcycle. They are required when registering your motorcycle. When ordering accessories or entrusting special services, the numbers enable the dealership to provide you with better service. Please record these numbers and keep them in a safe place.

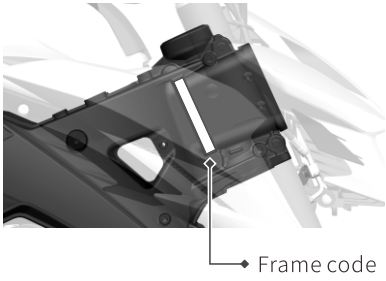

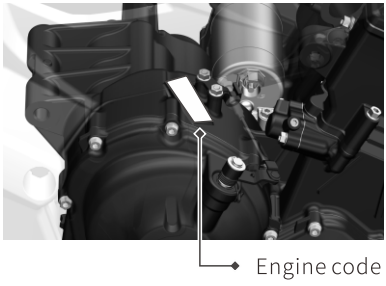

Namepate

- The nameplate is made of special materials and has tamper-proof properties. It is a one-time product. Please do not destroy or tear it.
- The nameplate has authoritative certification. Please do not make or print it privately.
- Do not wash the nameplate with corrosive liquids.
- Do not wash the nameplate with a high-pressure water gun.

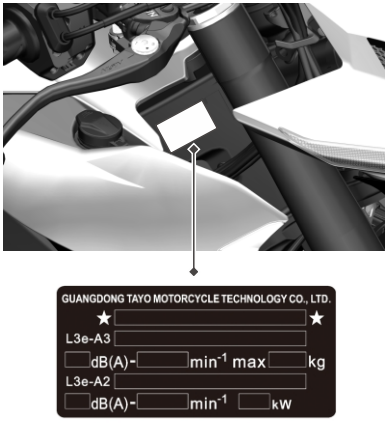

Specification sheet

Dimensions and curb weight

Length	2065mm
Width	800mm
Height	1130mm
Wheelbase	1450mm
Ground clearance	145mm
Seat cushion height	820mm
Whole cmotorcycle dry mass	174kg
Curb weight of the whole car	191kg

Crane system

Steering degree	35°
Tire Specification	
Front tire	120/70ZR17
Rear tire	180/55ZR17
Ignition method of electrical system	Inductive discharge type
Spark plug model	BN8RTIP-8
Battery specifications	12V, 6Ah
Fuse specifications	10A/15A/25A

Volume

Fuel tank effective volume	18L
Engine oil capacity	4000mL
When the engine changes the oil regularly and the oil filter is changed at the same time	3400mL
When the engine is regularly, changed with oil and the oil filter is not changed	3000mL

Lamp power

Low beam	18W/12V
High beams	32W/12V
Front position lights	6W/12V
Front turn signal	4.4W/12V
Rear position lights	3.9W/12V
Brake lights	4.0W/6.1W/12V
Rear license plate lights	0.4W/12V
Rear turn signal	3.5W/12V

Engine

Three-cylinder, vertical,
four-stroke, water-cooled, 699cc

Number of cylinders	3	
Cylinder diameter	70.0mm	
Stroke	60.6mm	
Displacement	699mL	
Compression ratio	13.0:1	
Start mode	Electric start	
Lubrication method	Pressure splash type	
Power	75.0kW	
Clutch	Wet multi-piece	
Transmission	Six-speed wheel shifting	
The primary wheel ratio	1.775	
Gear ratio	First gear	2.917
	Second gear	2.200
	Third gear	1.762
	Fourth gear	1.526
	Fifth gear	1.364
	Sixth gear	1.231
Drive form	Chain	
Economical fuel consumption	5.0L/100km	
Top speed	230km/h	

ZT703-R CIRCUIT schematic English version

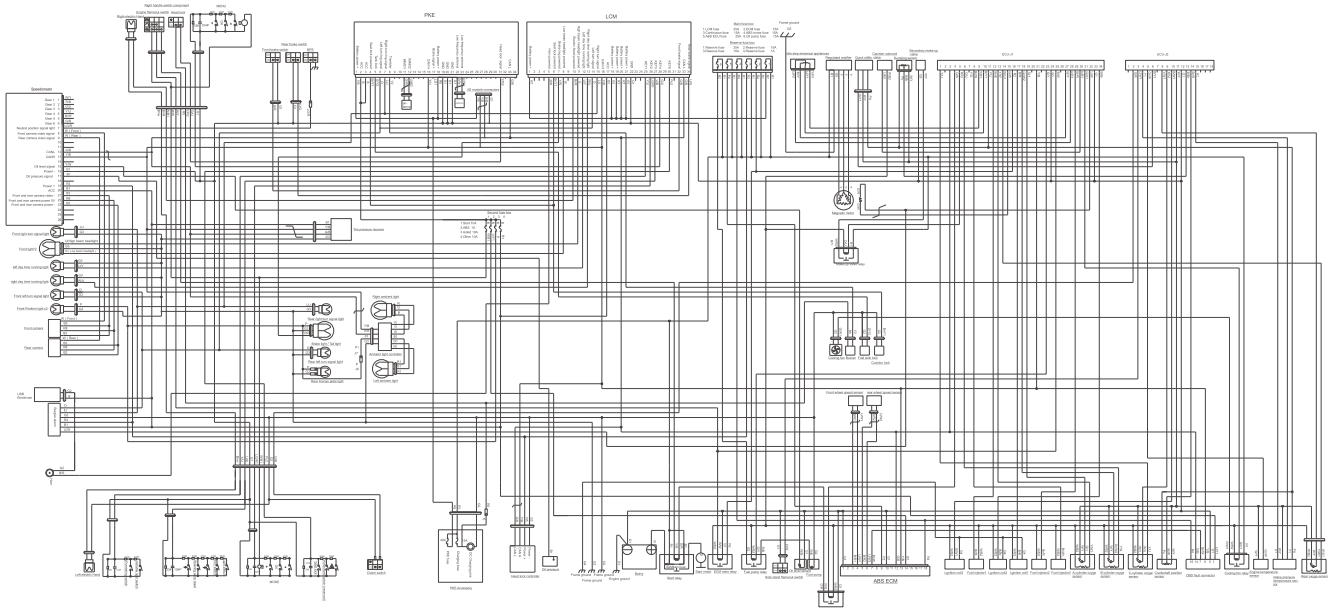
PKE
LCM
ECU-7
ECU-8
Speedometer
Magnetic valve
Transmission inverter
Rear Turning (left) light
Rear Turning (right) light
Rear left brake light
Rear right brake light
Left dimmer light
Rear Turning (left) light
Rear Turning (right) light
Rear Turning (left) light
Rear Turning (right) light
Rear Turning (left) light
Rear Turning (right) light
Front left turn signal light
Front right turn signal light
Front headlamp
Left dim light
Right dim light
Front left turn signal light
Front Headlamp light
Front camera
Rear camera
LAN Dimmer
Left Headlamp
Right headlamp
Rear camera
Rear camera
Rear camera

WWW.ZONTES.COM