ZT368T-K/ ZT368T-K(ETC)

Maintenance manuals



2026-10-8

Preface

All the information, illustrations, photos, etc. collected in this manual are compiled according to the latest products of ZT368T-K Euro V+. However, due to the continuous improvement of the product and other changes, there may be some inconsistencies between your motorcycle and this manual. When it comes to color or upgrading, please refer to the part code on the official website of ZONTES , and this manual will not be listed in detail; If the name of the part in this manual is inconsistent with the official website of ZONTES, the official website of ZONTES shall prevail.

If there is any deficiency in some parts of this manual, please refer to the "Driver's Manual". The latest version of the driver's manual can be downloaded from the corresponding model introduction on the official website of ZONTES.

©Guangdong Tayo Motorcycle Technology Co.,Ltd
All rights reserved

Notice to Users

This manual is written by Guangdong Tayo Motorcycle Technology Co., Ltd. to guide dealers or service personnel to use. This manual does not provide more detailed knowledge about motorcycles and is intended for service reference only. If you do not have the corresponding knowledge such as electrician, mechanic, etc., improper assembly or maintenance failure may occur during repair.

If you need to clean or wash the body parts of the motorcycle, you should use neutral motorcycle wash liquid or tap water or diesel, kerosene, etc. Acidic or alkaline motorcycle wash liquid will cause irreversible corrosion on the surface of parts, such as paint, electroplating surface, anodized surface, etc.; Gasoline can cause premature aging or hardening of sealants, gaskets, rubber parts, etc., reducing the service life. Non-woven fabrics that do not leave residue should be used for wiping, as ordinary rags may affect the assembly or cause other adverse effects such as cloth shavings or wool.

We try to update this manual as soon as possible after changes to the product.

The following are the meanings of the icons in this manual:

	Failure to observe will cause personal injury or death of the driver or maintenance personnel; or cause serious damage to parts and shorten the service life, etc.
	Failure to comply may result in personal injury or death of the driver or maintenance personnel; or damage to parts, abnormalities, etc.
	Failure to observe the warning will cause personal injury to the driver or maintenance personnel; or matters requiring special attention during disassembly and assembly
	It means that there is a requirement for torque
	It means that the piece needs to be replaced after disassembly
	In order to facilitate the reading of the electronic version, if there is this symbol on the right side of the step, you can click the symbol to quickly jump to the corresponding chapter

Directory

Directory 4
1.Vehicle information 11
Know Before Service 11
Body stickers 12
368K/368K (ETC) Technical Parameters 14
Front wheels/steering 14
Rear wheels/suspension 14
Braking system 15
368K/368K ETC Battery/Charging System 15
Lamp/Meter/Switch Description 15
Tighten the torque 16
The bolt tightening torque of the general fastening part 16
Control cable/ Power cable/pipe/electrical device distribution diagram 17
1.Lamp distribution map 17
2. Throttle cable (ETC without throttle cable) 19
3.Brake upper pump and brake hose 19
4.Calipers, brake hoses and wheel speed sensors 20
5.Distribution diagram of brake system parts 20
6.Oil supply system 22
6.1.1 Fuel Evaporation (24 Models) 22
6.1.2 Fuel Evaporation (ETC) 23
6.2.1 Fuel Supply (24 models) 24
6.2.2 Fuel Supply (ETC) 25
7.Distribution of cooling system components 26
7.1.1 Cooling System (24 models) 26
7.1.2 Cooling System (ETC) 27
8.Electrical device layout diagram 28
8.1.1 Electrical Component Layout Diagram (24 Models) 28
8.1.2 Electrical Component Layout Diagram (ETC) 30
9.Intake and exhaust systems 31
Tool 33
Expansion Nail Description 35
2.Maintenance 36
Know Before Service 36
Maintenance Cycle Table (24 Models) 38
Maintenance Cycle Table (ETC) 40
Air filter (filter), air inlet filter 42
1.Hold the motorcycle secure 42
2.Remove the left hood of the engine 42
3.Replace the air inlet filter 42
4.Remove the air filter housing 43
5.Replace the air filter element 43
6.Check the waste oil pipe of the air filter 43

7.Reloading 43
Bolts, nuts for mufflers 44
Engine Oil 45
1. Drain the engine oil 45
2. Replace the fine filter 45
3. Add engine oil 46
4. Replace gearbox oil 46
5. Confirm the oil level 47
Throttle Body 47
1. Clean carbon deposits without disassembling the throttle body 47
2. Disassemble the stepper motor and clean the carbon deposits 47
3. Remove the throttle body assembly to clean carbon deposits 48
4. Remove the sensor from the throttle body valve 49
5. Throttle Body Fault Troubleshooting Procedure 50
Throttle Cable (24 models) 50
1. Check 50
2. Adjust the throttle cable clearance 50
368K（ETC） 51
Idle speed 51
Check the idle speed 51
Fuel evaporative pollutant control system 52
Fuel lines 54
1.The fuel line should be inspected for leaks using an endoscope with LED lights 54
2.Replace the high-pressure oil line 54
3.Fuel pump 55
3.1 Fuel pressure is measured using an oil pressure gauge 55
3.2 simple test Fuel pump 55
4.Abnormal fuel pressure disposal 55
Radiator 56
1.Check the coolant 56
2.Addition of coolant (antifreeze) to the auxiliary tank 56
3.Coolant is added to the main water tank 56
4.Drain the coolant 57
5.Check if the fins of the radiator tank are deformed or if the air ducts are blocked 57
6.Check all water pipes for leakage and aging 58
Brake hoses 59
Brake fluid 59
1.Add brake fluid to the main cylinder of the front and rear disc brakes 59
2.Change the brake fluid 59
2.1 Change the front brake fluid 60
2.2 Replace the rear brake fluid 60
3.Brake System Bleeding 60
Tyre 60
1.Check the tires 62
2.Replace the tires 62
Forks 62
1.Check the appearance 63
2.Check the shock absorption performance 63

3.Shock absorber before disassembly 63
4.Straighten the fork tubes 63
5.Troubleshooting 64
Side brackets 64
1.Examine 64
2.lubrication 65
Main bracket 65
1.Examine 65
2.lubrication 65
3.Install the main bracket 66
4.Replace the main bracket return spring post 66
3.EFI system 67
Know Before Service 67
Fault codes 69
1.Read the fault code through the meter 69
2.Read the fault code through the diagnostic instrument 69
3.Error code 70
4.Clear the fault code 71
4.1 Manual purge 71
4.2 Clear with a diagnostic device 72
EFI parts layout 73
Fault diagnosis and troubleshooting of EFI parts 74
1.Tilt switch 74
2.OBD interface 75
3.Fuel pump 75
4.Canister solenoid valve 75
5.EFI relays 76
6.Injector 76
7.Throttle body 77
7.1 Common fault signs 77
7.2 Troubleshooting process 77
7.3 Sensor 77
8.Water and oil share sensors 78
9.Oxygen sensor 78
9.1 Detect 78
10.MSE8.0 ECU 78
11.Crankshaft position sensor 78
Engine Fails to Start and No Starting Symptoms Fault Diagnosis Process 80
Engine Fails to Start but Shows Signs of Starting Fault Diagnosis Process 80
Poor acceleration 81
The idle speed of the hot motorcycle is high 81
The cooling motorcycle is unstable at idle 82
Unstable Idle, Prone to Stalling 82
EFI (Electronic Fuel Injection) Fault Indicator Light On: Analysis Flowchart 84
EFI System Electrical Schematic Diagram 85
4.ignition system 86
Know Before Service 86
Troubleshooting 87

No Spark on Spark Plug 87
Ignition system layout 88
Ignition System Electrical Schematic Diagram 89
Ignition system check 90
Ignition timing 90
Check： 90
Installation 91
Ignition Coil 91
5.Starting system 92
Know Before Service 92
Troubleshooting 92
1.Starting relays 92
2.Starter motor 93
3.The starter motor runs slowly 93
4.The starter motor is working fine, but the engine does not start 93
Starting system layout 94
Electrical schematic diagram of the starting system 95
Starter motor 96
1.Remove the starter motor 96
2.Disassemble the starter motor 96
Examination 98
Starter motor front cover： 98
Motor back cover： 98
Denki： 98
Check the starting relay 98
1. Operation check 98
2. Check the relay coil 98
2.1 Input line 98
2.2 Ground wire 98
3. Check the starting relay 99
4. Disassembly and assembly of the starting relay 99
6.Oil supply system 100
Know Before Service 100
Tank disassembly 101
1.Disassemble the tank assembly 101
2.Dismantle the fuel pump 102
3.Remove the oil level sensor 102
4.Dismantle the external parts of the tank assembly 103
Examine 103
1.Fuel pressure test 103
2.Fuel pump check 103
3.Oil level sensor 103
7.Cooling system 104
Know Before Service 104
Troubleshooting 104
1.Engine temperature is too high: 104
2.Engine temperature too low: 104
3.Coolant leakage 104

Coolant system distribution map 105
Schematic diagram of coolant flow 105
Cooling system disassembly 106
Coolant system clamp/clamp distribution 106
Thermostat components and small cycles 107
Cooling system accessories 108
1.Main water tank 109
2.Water tank filling port 109
2.1Overall tightness check 109
2.2Pressure relief valve inspection 109
3.Auxiliary tank 109
4.Water and oil share sensors 109
5.Thermostats 110
5.1 Examine 110
5.2 Fault phenomenon 110
5.3 Dismantle 110
6. Water pipes 111
7.Inspect the water pump cover assembly 111
8.Braking system 112
Know Before Service 112
Troubleshooting 113
The brake handle is soft 113
The brake handle is hard 113
Disassemble the disc brake master cylinder and caliper 113
Disassembly of Front Disc Brake Master Cylinder 113
Disassemble the rear disc brake main pump 114
Disassemble the front disc brake caliper 114
Disassemble the rear disc brake caliper 115
Wheel speed sensor and inductive ring gear clearance check 115
ABS Troubleshooting 117
Fault diagnosis process using a handheld ABS diagnostic tool 118
9 .Battery/charging system 119
Know Before Service 119
Troubleshooting 120
Charging System Layout Diagram 121
Electrical Schematic Diagram 122
Battery Removal and Installation 122
1.Removal 122
2.Inspection 122
3.Charging 122
Charging System Inspection 122
1.Leakage Test 122
2.Checking Charging Voltage 123
3.Checking the Magneto Stator Charging Coil 123
10.Fork assembly 124
Know Before Service 124
Fork Component Exploded View: 125
Direction put exploded view 125

Front fork decomposition diagram 127
Exploded view of the lower panel 129
Replace the steering handle (24 models) 131
1.Remove the steering handle 131
2.Disassemble the direction to put the assembly 131
3.Install the direction handle assembly 132
4.Install the direction handles 133
Replace the steering handle (ETC model) 133
1. Remove the handlebar cover 133
2. Remove the handlebar assembly 134
3. Install the handlebar assembly 135
4. Install the handlebar cover 135
Replace the front wheel 136
1.Remove the front wheel assembly 136
2. Install the front wheel assembly 136
Exploded view of the front wheel assembly: 137
Front wheel assembly inspection and maintenance: 138
1.Disc brake discs 138
1.1The service life of the disc brake disc 138
1.2 How to replace the disc brake disc 138
2.Front wheel oil seals and bearings 138
2.1 The service life of the front wheel oil seal and bearing 138
2.2 Replacement method of front wheel oil seal and bearing 138
3.Front rims and tires 138
3.1 The service life of the front rim and tires 138
3.2How to replace the front rim and tires 139
3.3 Balancing 139
Replace the front shock absorber 140
1.Remove the front wheel and front fender assembly 140
2.Remove the left and right front shock absorbers 140
3.Replace components such as shock absorbers, front fenders, and front wheels 141
Replace the lower coupling plate 141
1.Pre-disassembly of parts: 141
2.Disassemble the lower panel assembly 141
3.Install the lower panel assembly 141
4.Install other disassembly components 142
11.Disassembly and assembly of motorcycle covers 143
Removal of the windshield 146
Removal of the cover in the front panel 146
Disassembly of the front panel 146
Disassembly of windshield motor components 146
The front of the front compartment panel is removed 147
Disassembly of headlight assembly 148
Disassembly of the head bracket 148
Left and right pedal trim cover disassembled 149
The lining of the left and right pedal decorative covers is removed 149
Dismantling of the middle and bottom of the enclosure 150
Removal of the rear armrest 150

Disassembly of the rear storage compartment 150
Disassembly of the cushion assembly 150
Removal of the rear apron 151
Removal of the rear trim cover of the outer cover of the fuel tank 151
Removal of the left and right covers 151
Disassembly of the rectifier 151
Disassembly of the rear taillight assembly 151
Disassembly of the left and right pedal assemblies 152
Disassembly of the rear assembly of the front compartment panel 152

1.Vehicle information

Know Before Service

1. Use good quality tools, or special tools and fixtures designed by our company. The use of inferior tools may cause damage to parts, peeling of plating, improper assembly, etc.
2. The O-rings, paper gaskets, copper gaskets, and component sealing rings used for sealing must be replaced before assembling.
3. Fasteners with torque requirements need to use a torque wrench to check the torque; if the torque is not required, refer to the general torque value recommended by general fasteners.
4. Clean up before assembly; after assembly, check whether the assembly is correct and in place.
5. The vehicle should be parked balanced and pay attention to safety during disassembly and assembly. Including but not limited to the use of electric tools, hand tools, pneumatic tools, hydraulic tools, handling; prevent contact with skin, eyes, burns, etc.
6. The replaced oils, liquids, batteries, etc. must be recycled and handed over to qualified institutions for disposal; it is forbidden to dump them at will to pollute the environment or water sources.
7. Swallowing or inhaling coolant, brake fluid, etc. will cause certain harm to the human body. Any exposed skin such as hands and face should be cleaned thoroughly after each addition. If swallowed by mistake, immediately contact the poison control center or hospital; if inhaled, please immediately go to a ventilated environment. If it accidentally splashes into the eyes, immediately rinse the eyes with a large amount of running water and seek medical advice or consultation in time. Keep away from children and pets.

Only some of the basic requirements for the prevention of accidental injuries can be enumerated; It is not possible to exhaustively list all scenarios. Be vigilant during disassembly and assembly to prevent accidents.

Body stickers

①The VIN is visible when the seat cushion is opened, and the VIN code is engraved on the rear tube of the frame

② Muffler code on the inside above the muffler

③ The nameplate is above the radiator

④ The right front storage compartment warning sticker is affixed to the right front storage compartment lid

⑤ Left front storage box warning sticker is affixed to the left front storage box lid

⑥ Locker warning stickers are affixed to the front of the lockers

⑦ The engine identification code is engraved on the left crankcase

Note: The contents of nameplates, muffler codes and warning stickers vary depending on the displacement.




⑤
警 告
WARNING
通电情况下，才能打开或
Only when the power is turned on, can the left front
关闭左前置物箱盖
luggage compartment cover be opened or closed.
最大载质量
Maximum load
左前置物箱负重：1.5KG
Left front box load: 1.5KG
注意：OBD接口、USB接口
Note: OBD port，USB port
⑥
警 告
WARNING
最大载质量
Maximum load
后置物箱负重：5kg
Rear storage box load
后扶手负重：10kg
Rear armrest load
轮胎胎压：
Tire pressure
前轮 240kPa 34psi
front wheel
后轮 260kPa 37psi
Rear wheel
⑥
⑤
ZONTES
⑦
⑦

368K/368K (ETC) Technical Parameters

project		parameter	
Whole vehicle	Front tires	120/70—15 CM—SC13 56S	
	Rear tires	140/70—14 CM—SC13 68S	
	Front rim specifications	MT:3.5×15	
	Rear rim specifications	MT:3.75×14	
	Brake fluid	DOT4 0.25L（0.07 US gal,0.06 lmp gal）	
	Oil usage	Replace the fine filtration:	1.75L（0.46 US gal,0.39 lmp gal）
		Without changing the fine filtration:	1.55L（0.41 US gal,0.34 lmp gal）
	Gearbox oil usage	0.2L（0.05 US gal,0.04 lmp gal）	
motor	fuel oil	95 and above	
	Idle speed (r/min)	1600±100	
spark plug	Spark plug model	LMAR8A—9	
	interval	0.8～0.9mm(0.031～0.035 in)	
	Resistance (kΩ)	3～7.5	
Cooling system	Total coolant usage	1.54L（0.41 US gal,0.34 lmp gal）	
	Thermostat turning on temperature	80～84℃(176～183.2 F)	
	Thermostat is fully open temperature	95℃(203 F)	
	The thermostat opens the stroke	≥3.5mm(0.13 in)	
	Coolant type	Ethylene glycol + distilled water	

Front wheels/steering

project		standard	Limit values
Tread depth		-	≥1.6mm(0.063 in)
Standard tire pressure at room temperature		240kPa(2.45 kgf/cm^2,34.8 PSI)	-
Front rims	Radial runout	-	1.5mm(0.006 in)
	Axial runout	-	1.5mm(0.006 in)

Rear wheels/suspension

project		standard	Limit values
Tread depth		-	≥1.6mm(0.063 in)
Standard tire pressure at room temperature		260kPa(2.7 kgf/cm^2,37.7 PSI)	-
Rear rims	Radial runout	-	1.5mm(0.006 in)
	Axial runout	-	1.5mm(0.006 in)
V-belt 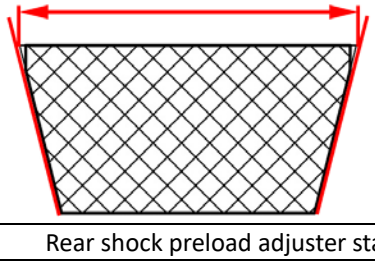	Top width（1）	27.8mm(1.094 in)	≥26.8mm(1.055 in)
Rear shock preload adjuster standard position		Fourth gear	–

Braking system

project		standard	Limit values
Front disc brakes	Brake fluid	DOT4	-
	Brake pad use limit	-	Bottom of the trough
	Brake disc thickness	≥5.0mm(0.197 in)	＜4.5mm(0.177 in)
Rear disc brakes	Brake fluid	DOT4	-
	Brake pad use limit	-	Bottom of the trough
	Brake disc thickness	≥4.5mm(0.177 in)	＜4.0mm(0.157 in)

368K/368K ETC Battery/Charging System

project			standard
battery	type		HJ13-FPZ
	capacity		6Ah
	The battery self-discharge current		1.1 mA on average
	voltage	Fully charged	13.3~13.6V
		Charging voltage is required for unloaded vehicles	≤13.1V
		Charging voltage is required for loading	≤12.5V
	Constant voltage charging mode	Constant pressure range	14.4～14.8V
		Initial charge current	0.1~0.2 times of battery capacity
		Charging time	6~24 hours
	Constant current charging mode	Maximum charging current	0.1 times the battery capacity
		Charging time	5~8 hours
		Charging current × charging time must be controlled within the current range of 0.5~0.8 times of the battery capacity	

Lamp/Meter/Switch Description

project			parameter
Luminaires (LED)	Headlights	High beams	45W
		Low beam	30W
	Front position lights		2.5w
	Front turn signal		2.5W
	Rear turn signal		3W
	License plate lights		0.5W
	Brake lights/tail lights		6W
	Ambient lighting for the storage compartment		0.2W
insurance	Master insurance		25A
	ECM		15A
	ABS hydraulic control unit motor		15A
	Hydraulic control unit ECU		10A
	lamplight		15A
	Constant power supply		15A
	spare		15A
Water temperature sensor	room temperature		1.5～4.0 KΩ

Tighten the torque

The bolt tightening torque of the general fastening part

	Class 4.8-6.8 (bolt head marked "4")			Class 8.8 (bolt head marked "7" or "8.8")		
Bolt Diameter	Tightening Torque Range	Standard Value	Breaking Torque	Tightening Torque Range	Standard Value	Breaking Torque
M4	1-2	1.4	/	1.5-3	2.5	/
M5	2-4	2.9	4.5	3-6	4.5	8
M6	4-7	4.9	10	8-12	10	14.5
M8	10-16	12.2	20	18-28	22	34
M10	22-25	24.5	45	40-60	44	76
M12	35-55	43	75	70-100	77	112
M14	50-80	69	123	110-160	124	200
M16	80-130	110	195	170-250	200	300
M18	130-190	150	285	200-280	270	450

Note: The connection fastening torque of the plastic parts is half of the fastening torque of the 6.8 bolt

Control cable/ Power cable/pipe/electrical device distribution diagram

1.Lamp distribution map

368K 24 models

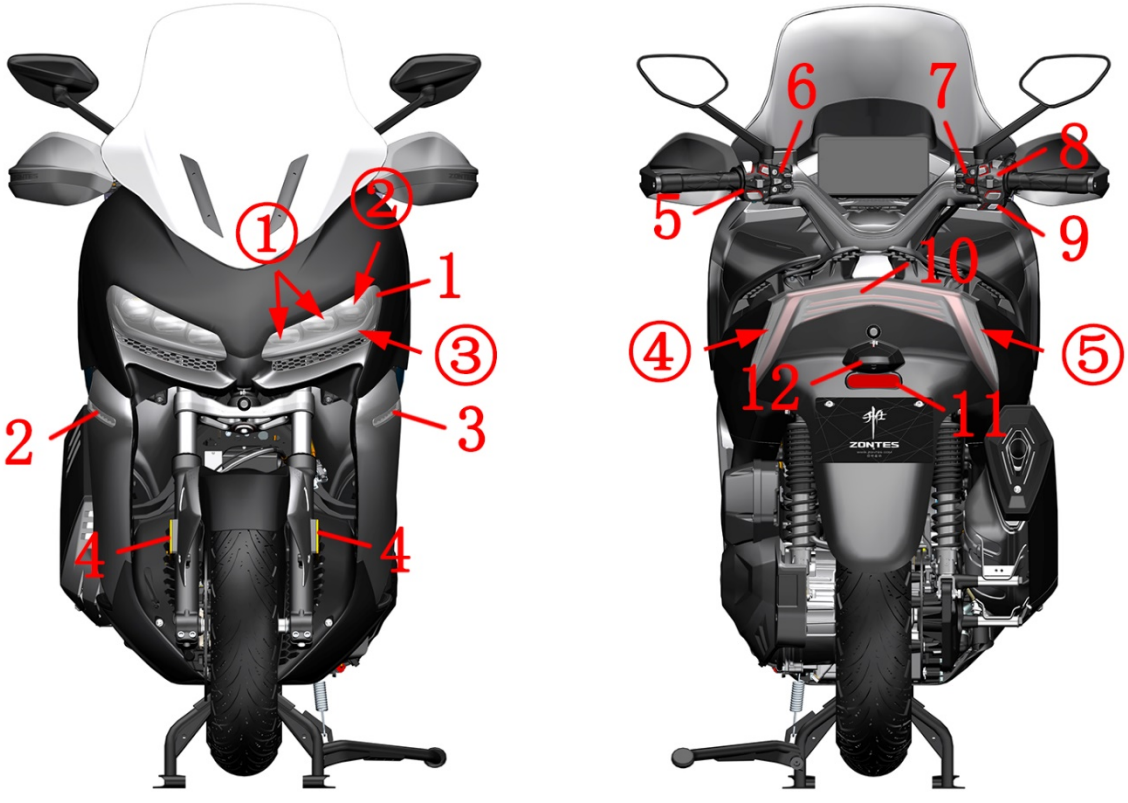

1-headlight（①-low beam position ②-High beam position ③-Position light/daytime running light position） 2-Right turn signal 3-Left turn signal 4-side reflector 5-Left hand handle switch 6-Left hand handle sub switch 7-Right hand handle sub switch 8-Right hand handle switch 9-Handle the heating switch 10-Rear tail light（④-Rear left turn signal ⑤-Rear right turn signal） 11-rear reflector 12-rear license plate lamp

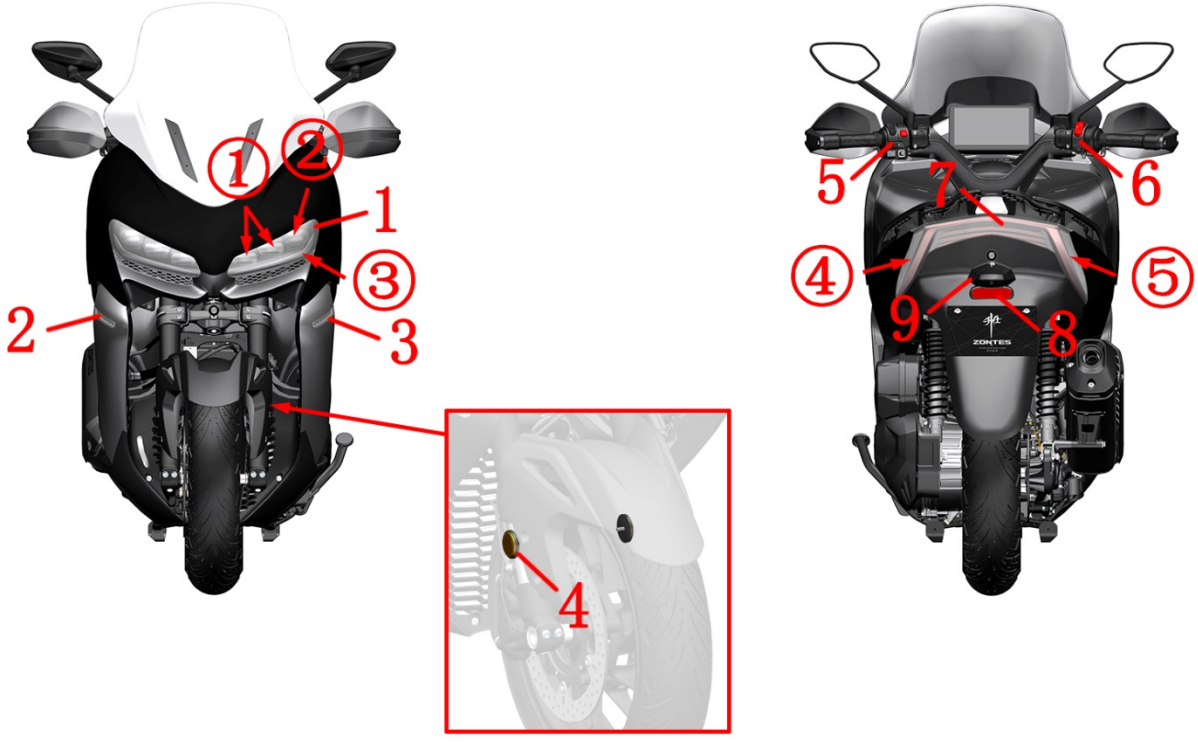

1-headlight（①-low beam position ②-High beam position ③-Position light/daytime running light position） 2-Right turn signal 3-Left turn signal 4-side Reflector 5-left hand holds the switch 6-right hand switch 7-rear taillight（④-rear Left Turn Signal ⑤-rear Right Turn Signal） 8-rear Reflector 9-rear license plate light

2. Throttle cable (ETC without throttle cable)

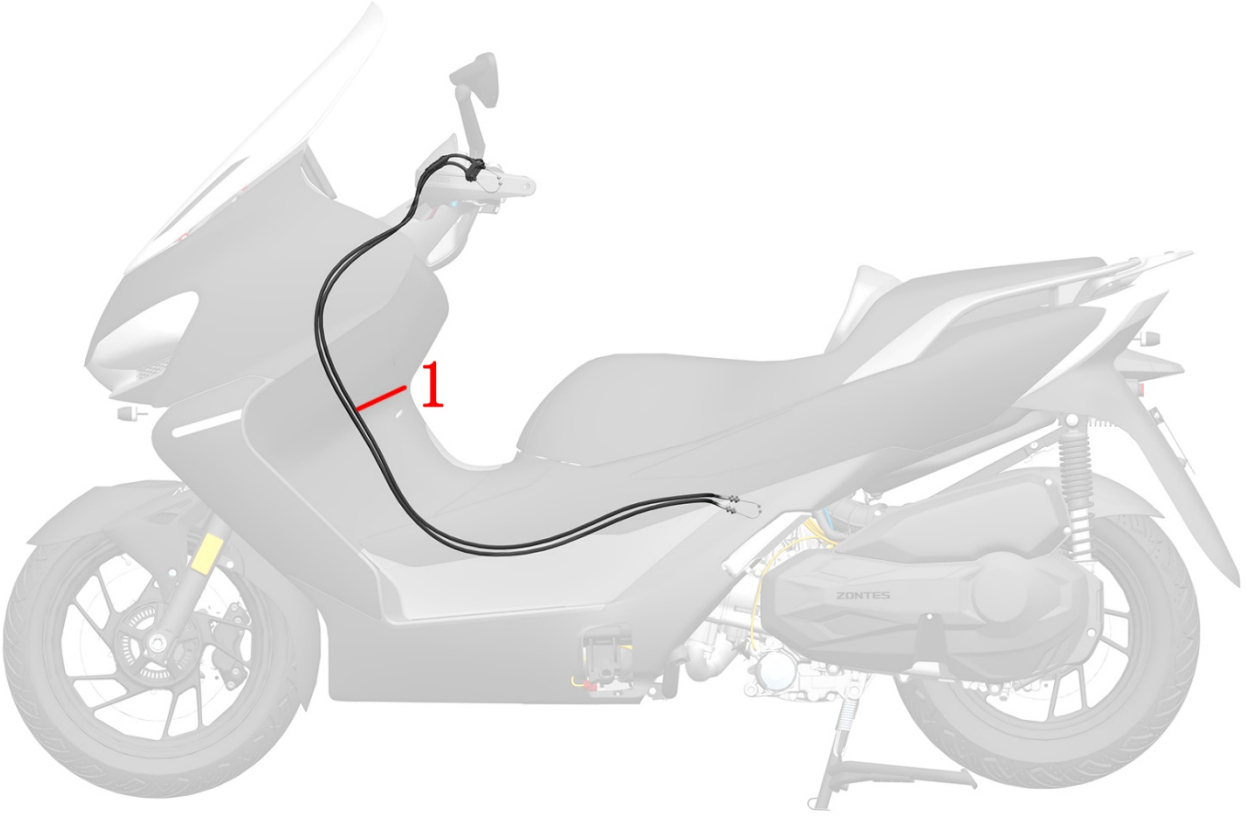

1-throttle cable

3.Brake upper pump and brake hose

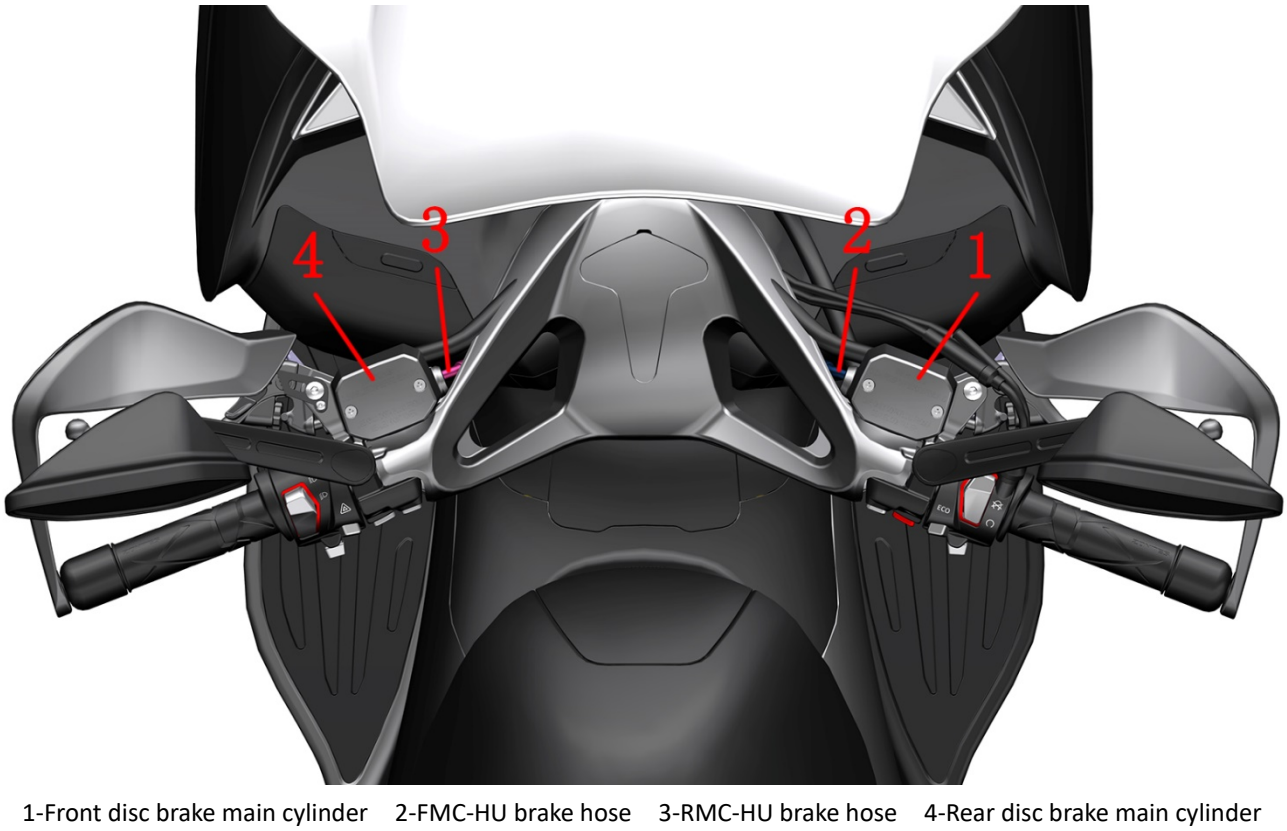

1-Front disc brake main cylinder 2-FMC-HU brake hose 3-RMC-HU brake hose 4-Rear disc brake main cylinder

4.Calipers, brake hoses and wheel speed sensors

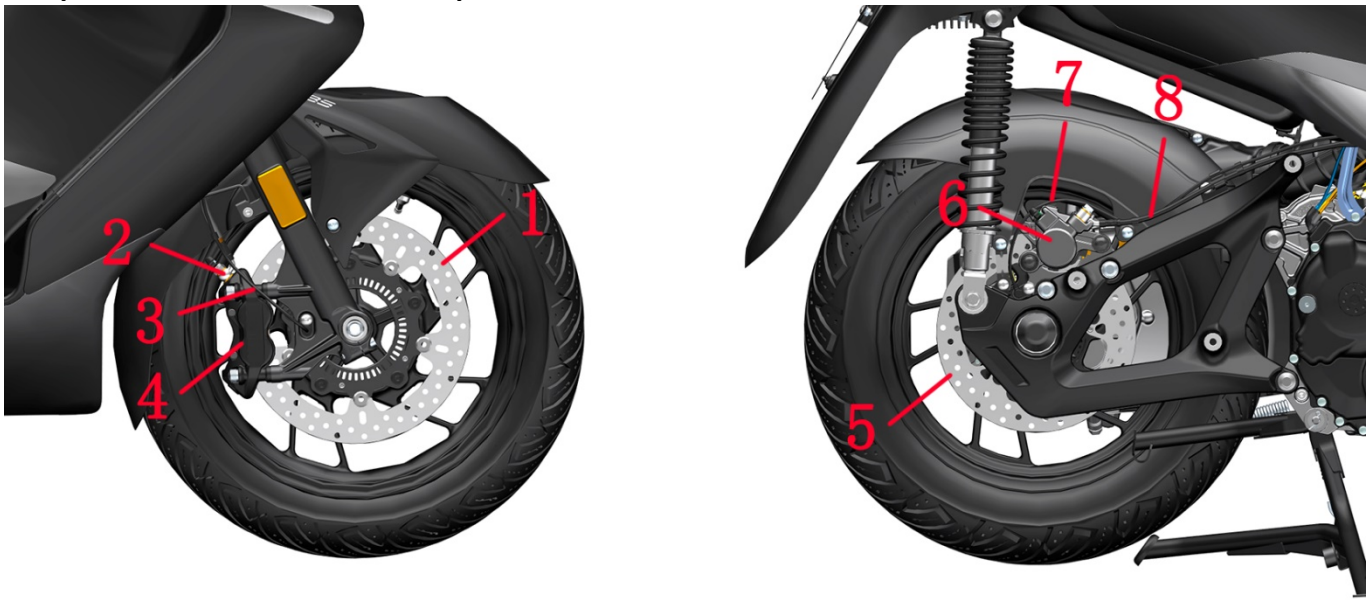

1-Front brake discs 2-FC-HU Brake hoses 3-Wheel speed sensor (front) 4-Front disc brake calipers 5-Rear brake disc 6-Rear disc brake calipers 7-Wheel speed sensor (rear) 8-RC-HUBrake hoses

5.Distribution diagram of brake system parts

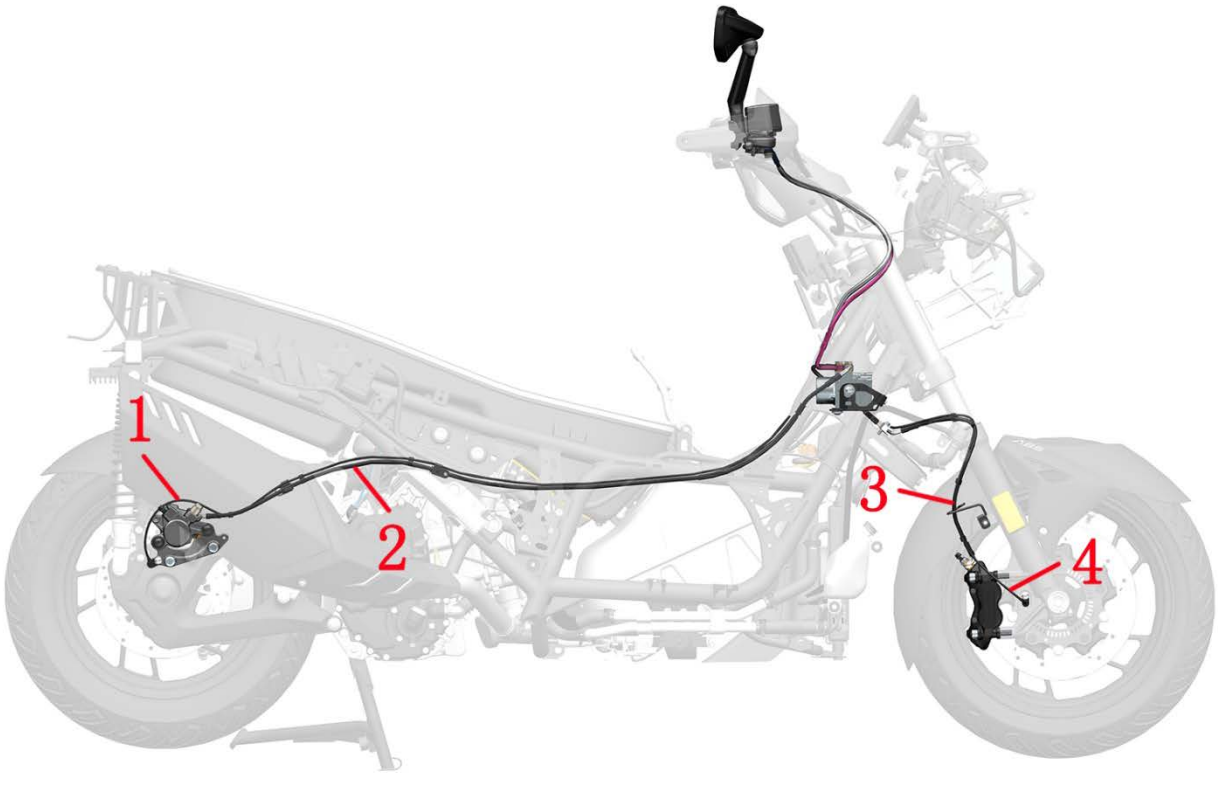

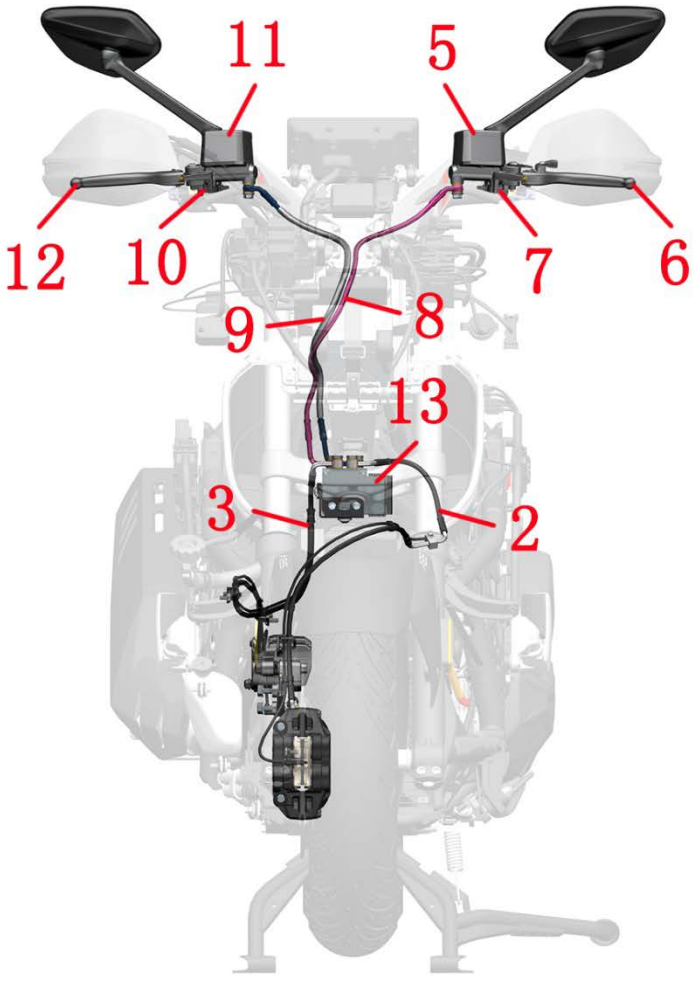

1-Wheel speed sensor (front) 2-FC-HUBrake hoses 3-RC-HUBrake hoses 4-Wheel speed sensor (rear) 5-Rear disc brake main pump 6-Rear brake handle 7-Rear brake switch 8-RMC-HU Brake hoses 9-FMC-HU Brake hoses 10-Front brake switch 11-Front disc brake main pump 12-Front brake handle 13-Hydraulic control unit

6.Oil supply system

6.1.1 Fuel Evaporation (24 Models)

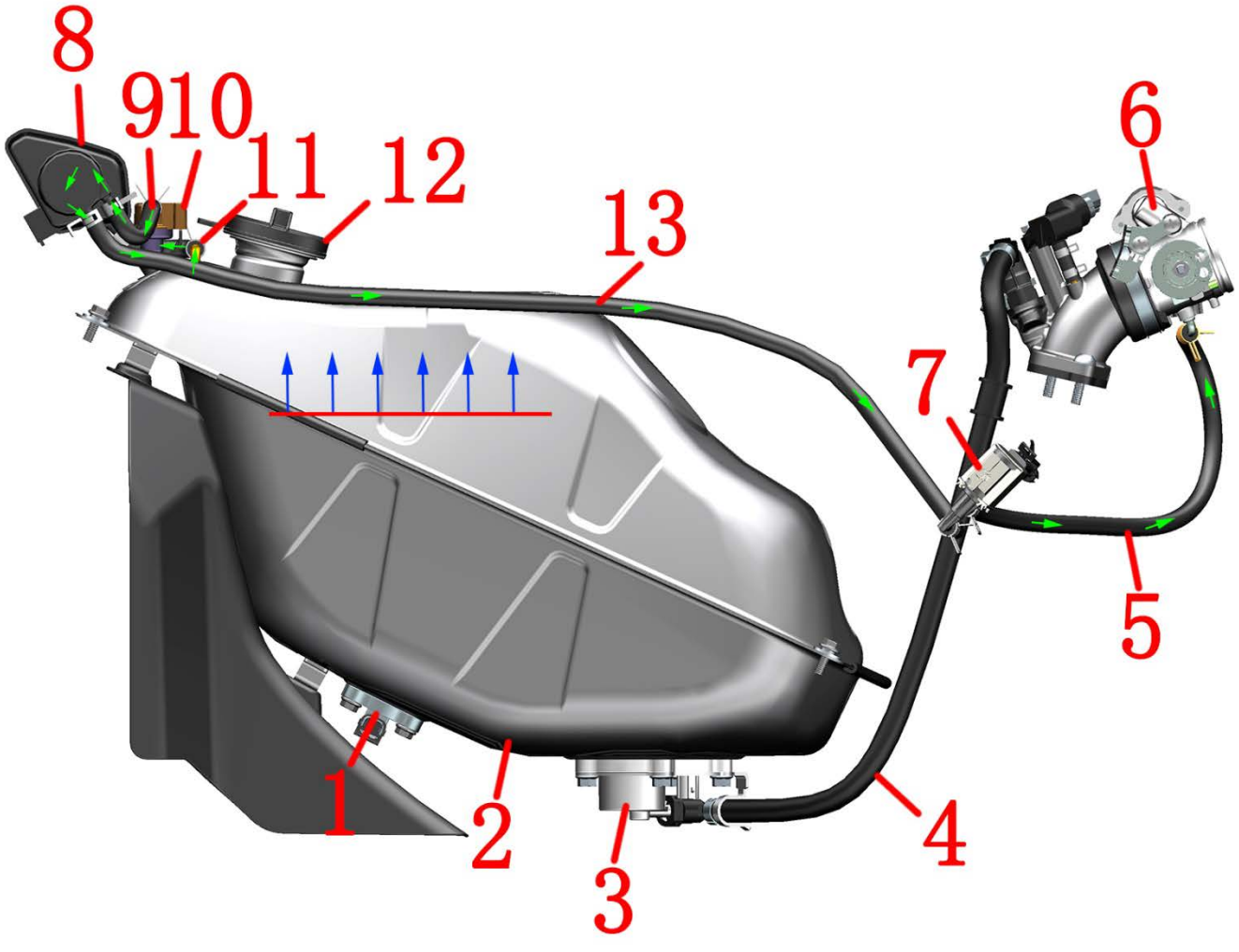

1-Oil level sensor 2-Fuel tanks 3-Fuel pump 4-High-pressure tubing 5-Solenoid valve outlet pipe
6-Throttle body assembly 7-Canister solenoid valve 8-Carbon canisters 9-Carbon canister adsorption tube
10-External oil and gas separator 11-Fuel tank snorkel 12-Fuel tank cap 13-Solenoid valve intake pipe

Fuel evaporation：

Hydrocarbon→Fuel tank snorkel→External oil and gas separator→Carbon canister adsorption tube→Carbon canisters→Solenoid valve intake pipe→Solenoid valve outlet pipe→Throttle body assembly→intake manifold→cylinder

6.1.2 Fuel Evaporation (ETC)

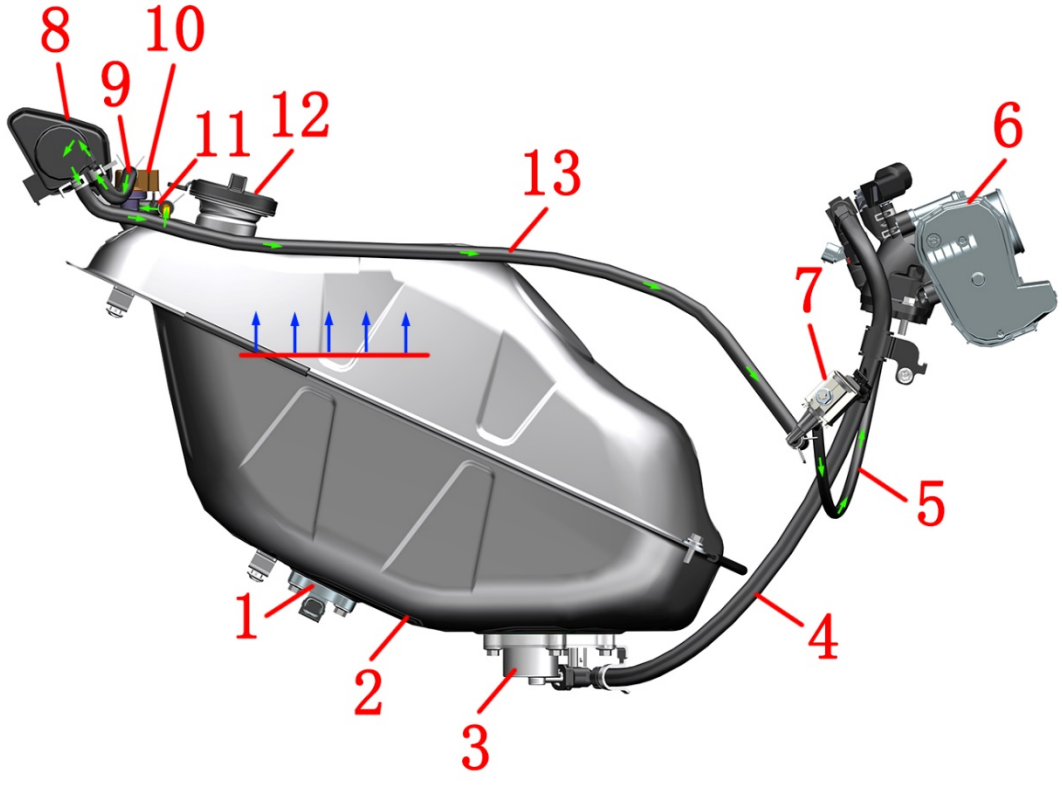

1-Oil level sensor 2-Fuel Tank 3-Fuel Pump 4-High-pressure oil pipe 5-Solenoid Valve Outlet Pipe
6-Throttle Body Assembly 7-Carbon Canister Solenoid Valve 8-Carbon Canister 9-Carbon canister adsorption tube
10-External oil-gas separator 11-Fuel Tank Vent Pipe 12-Fuel Tank Cap 13-Solenoid Valve Intake Pipe

Fuel evaporation:

Oil and Gas→Fuel Tank Vent Pipe→External oil-gas separator→Carbon canister adsorption tube→Carbon Canister→Solenoid Valve Intake Pipe→Solenoid Valve Outlet Pipe→Throttle Body Assembly→Intake Manifold→Cylinder

6.2.1 Fuel Supply (24 models)

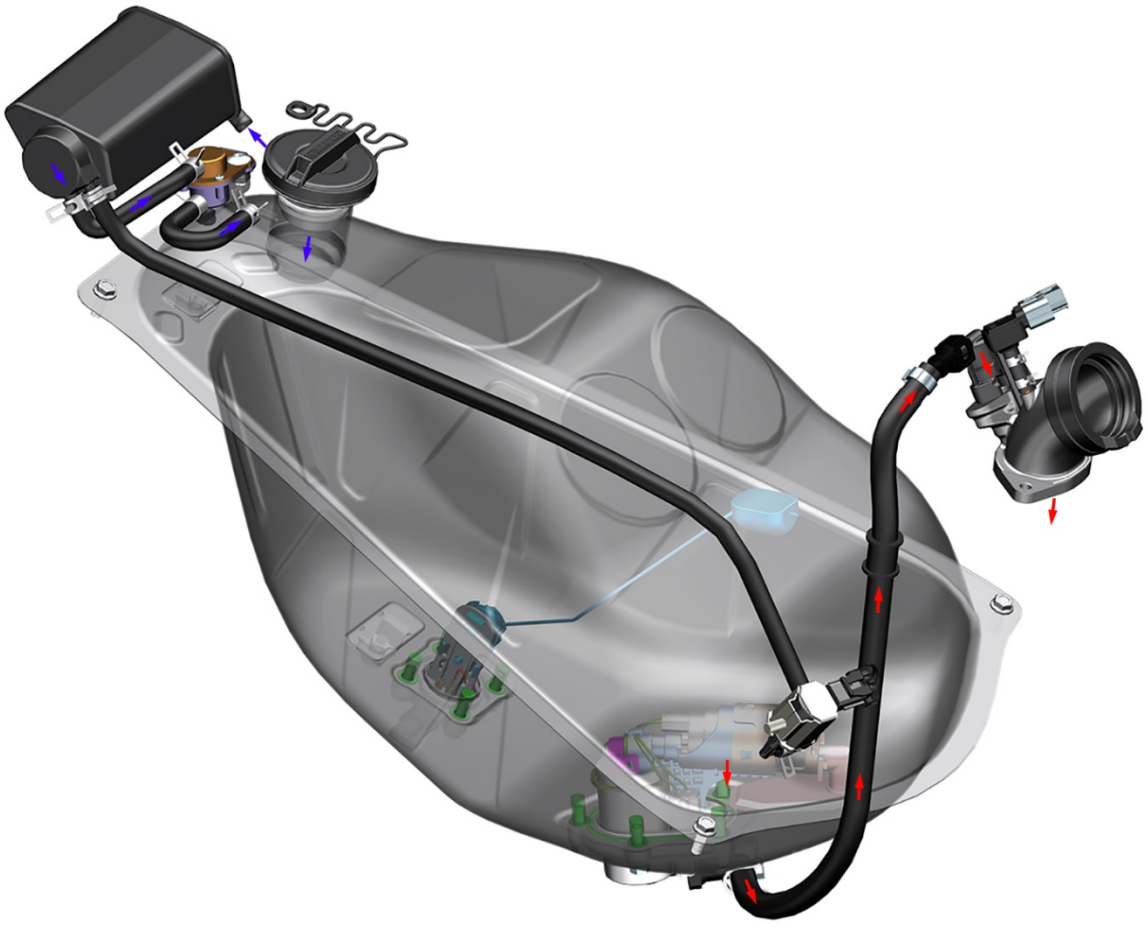

Oil Supply System:

Air → canister→adsorption/ventilation pipes→ air-air separators (inside the tank)

Fuel → fuel pump filter→ fuel pump→ high-pressure tubing→ injector → cylinder

6.2.2 Fuel Supply (ETC)

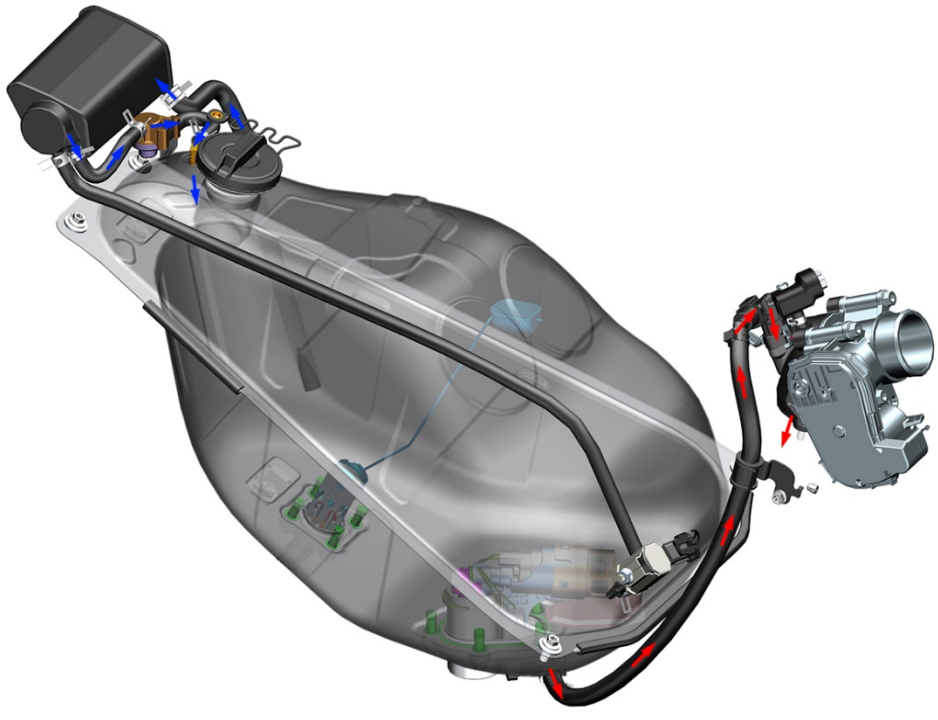

Fuel Supply System:

Air→Carbon Canister→Adsorption / Vent Pipe→Oil and Gas Separator

Fuel→Fuel pump filter→Fuel Pump→High-pressure oil pipe→Injector Nozzle→Cylinder

7.Distribution of cooling system components

7.1.1 Cooling System (24 models)

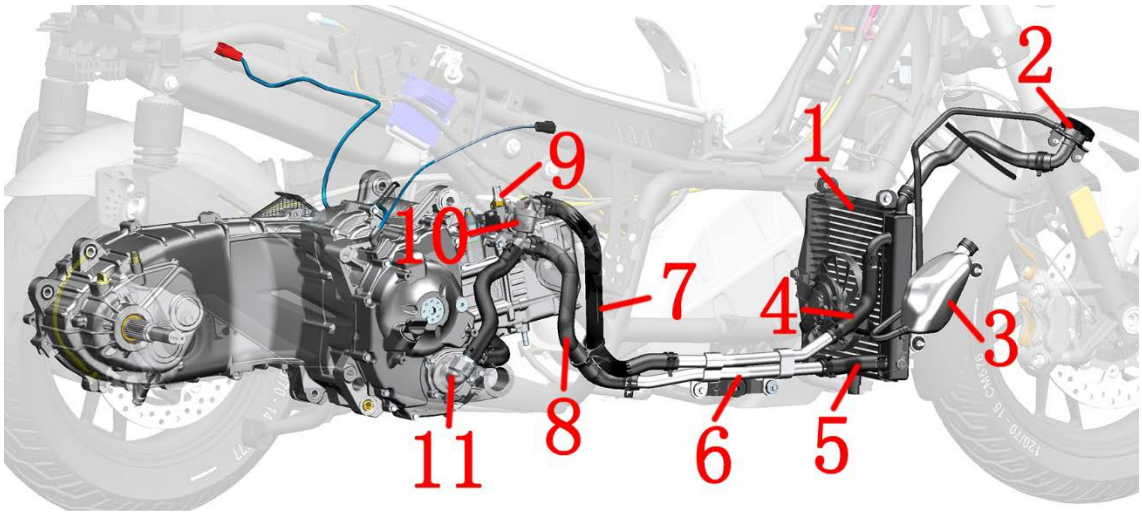

1-Main water tank 2-Water tank filling port 3-Auxiliary tank 4-Main tank inlet pipe 5-Main tank outlet pipe
6-Aluminum water pipes 7-Thermostat outlet pipe 8-Engine water inlet pipe 9-Water and oil share sensors
10-Thermostats 11-Water pump cover assembly

7.1.2 Cooling System (ETC)

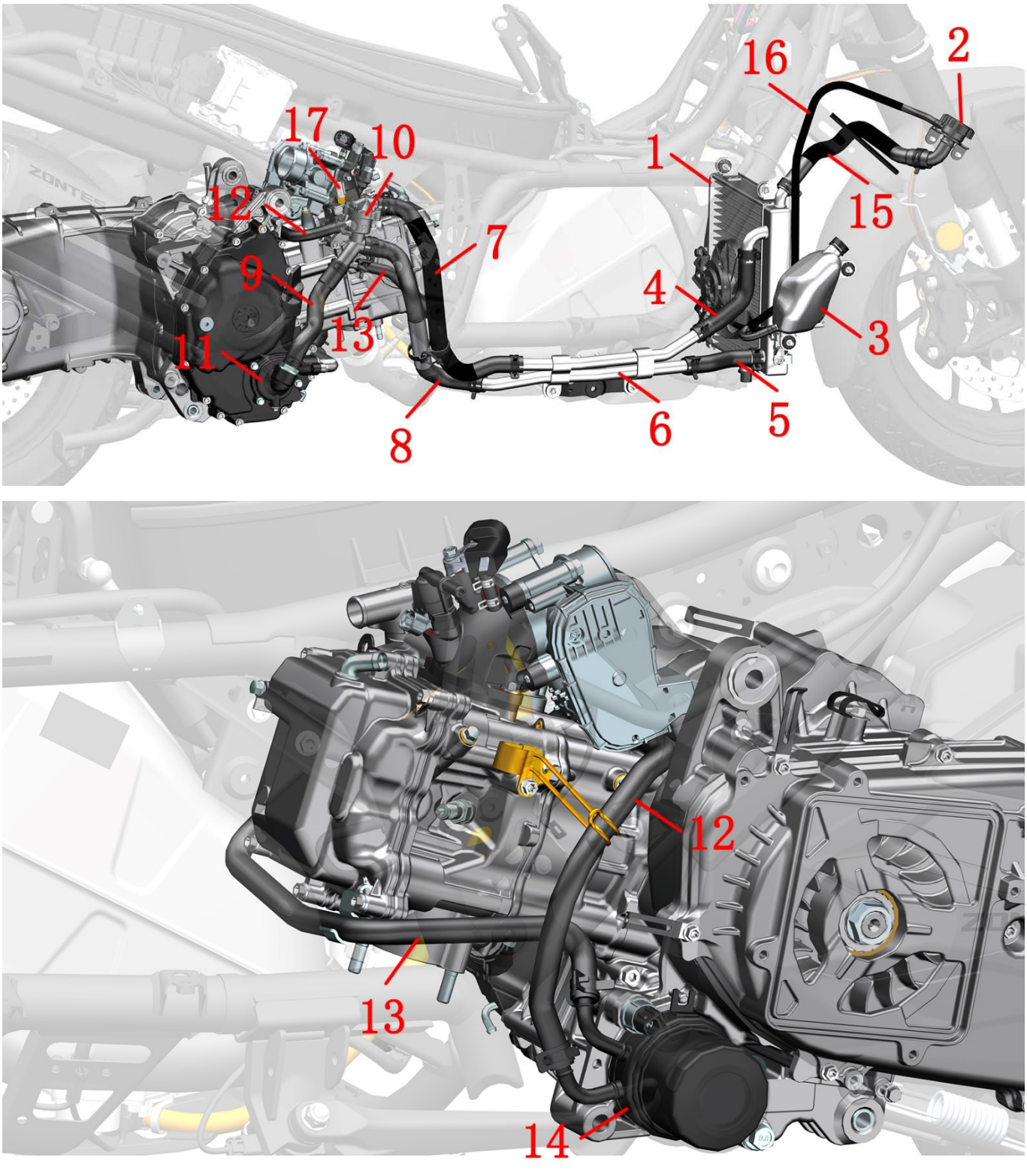

1-Main Water Tank 2-Water tank filler neck 3-Auxiliary Water Tank 4-Main water tank inlet pipe
5-Main water tank outlet pipe 6-Aluminum water pipe 7-Thermostat outlet pipe 8-Engine Inlet Pipe
9-Water pump cover inlet pipe 10-Thermostat 11-Water Pump Cover Assembly 12-Oil cooler inlet water pipe
13-Oil cooler outlet pipe 14-Oil Cooler 15-Water tank filler connection water pipe
16-Auxiliary water tank connecting water pipe 17-Water-oil shared sensor

8.Electrical device layout diagram

8.1.1 Electrical Component Layout Diagram (24 Models)

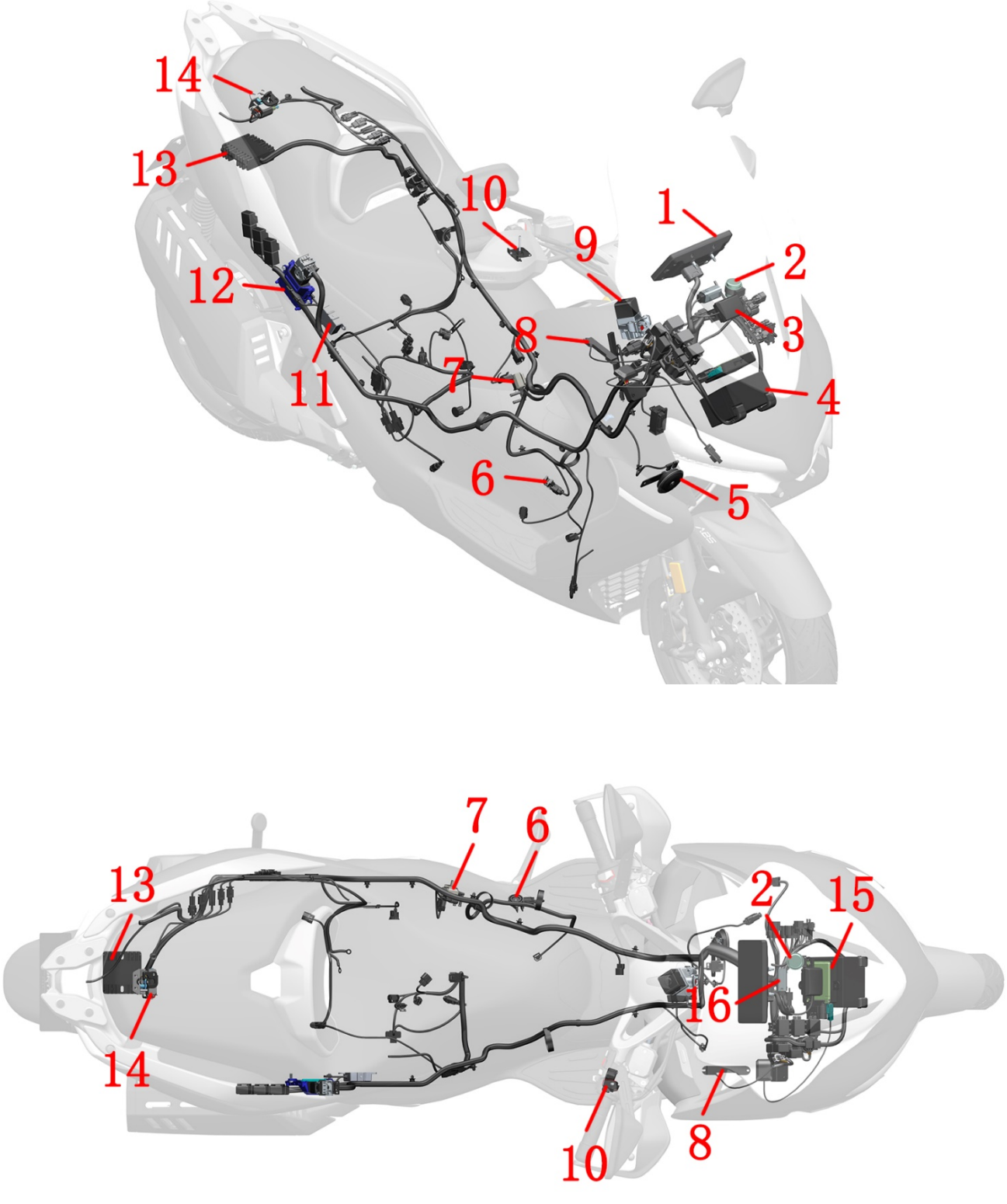

1-TFT meter 2-Flasher 3-Windshield motor controller 4-accumulator 5-horn 6-Side bracket kill switch 7-Canister solenoid valve 8-No electrical inductive antenna 9-Steering lock 10-Electric handbar switch 11-Tire pressure receiver 12-Engine controller (ECU) 13-rectifier 14-Cushion lock 15-PKE 16-Tilt switch

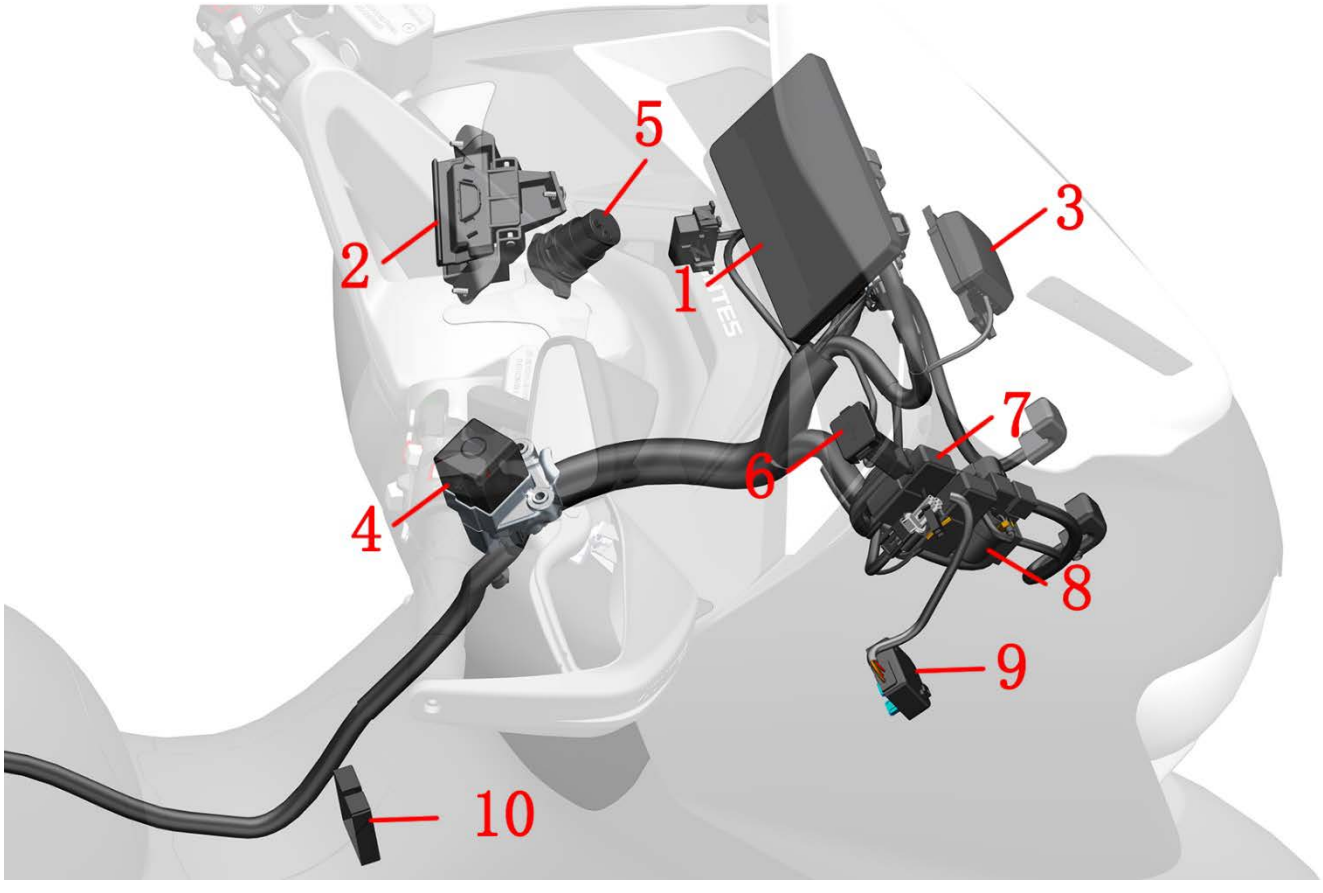

1-TFTappearance 2-Front left storage compartment lock 3-Windshield motor controller 4-Steering lock 5-Dual-port USB charging cable 6-Single-port charging cable 7-EFI relays 8-Start the relay 9-Charging port base 10-Electronic lock of the fuel tank

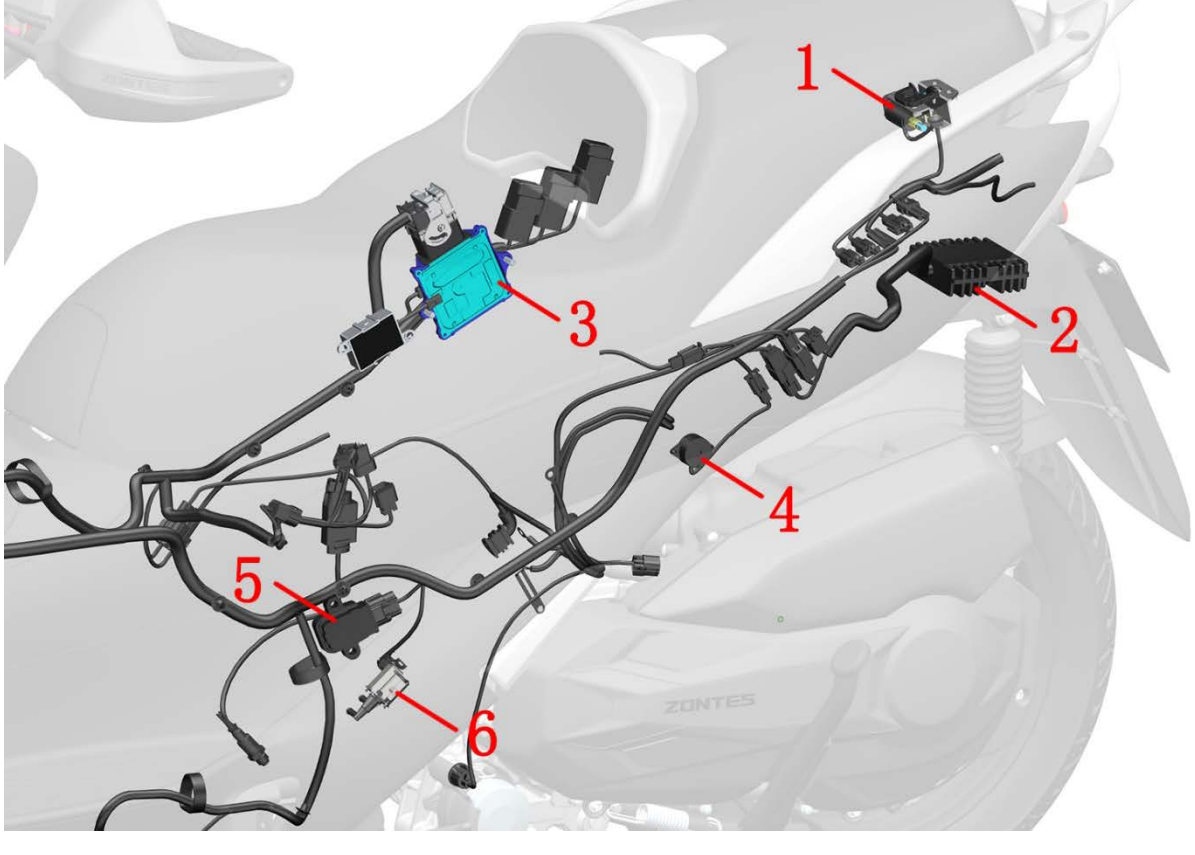

1-Cushion lock 2-rectifier 3-Engine controller（ECU） 4-buzzer 5-Ignition coil body 6-Canister solenoid valve

8.1.2 Electrical Component Layout Diagram (ETC)

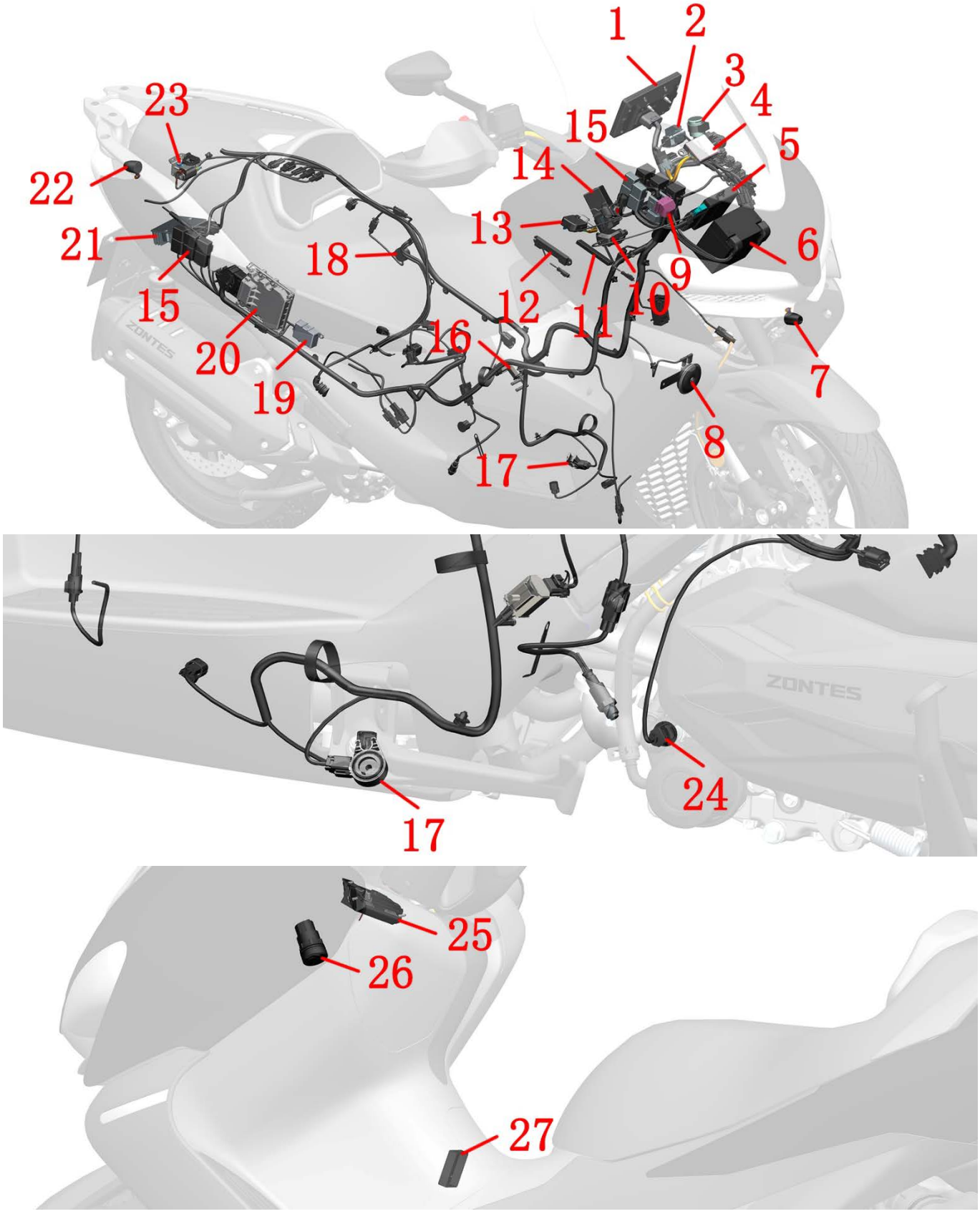

1-TFT Instrument 2-Tilt Switch 3-Flasher 4-Intelligent Control Box 5-PKE Main Unit 6-Lithium Battery 7-Front Camera 8-Horn 9-Starting Relay 10-GPS Antenna 11-PKE External Single Antenna 12-Powerless Inductive Antenna 13-Charging Port Socket 14-Handlebar Lock 15-Relay 16-Canister Solenoid Valve 17-Side Stand Kill Switch 18-Buzzer 19-Tire Pressure Receiver Main Unit 20-Engine Control Unit (ECU) 21-Rectifier 22-Rear Camera 23-Electronic Seat Lock 24-Oil Temperature Sensor 25-Front Left Storage Box Lock 26-Dual USB Charging Cable 27-Fuel Tank Electronic Lock

9.Intake and exhaust systems

24 models:

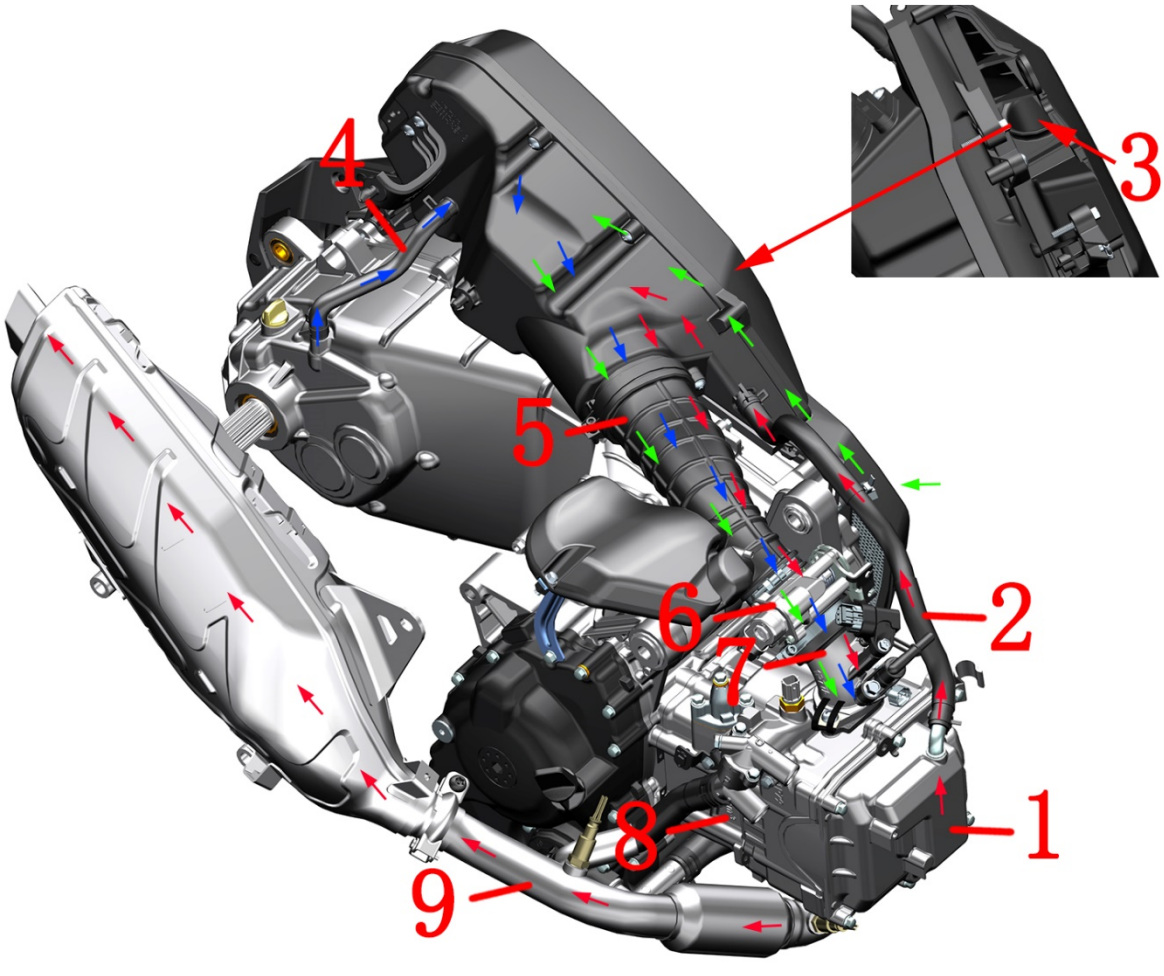

1-cylinder head 2-cylinder head exhaust pipe 3-Air filter intake 4-Gearbox exhaust pipe 5-Air filter outlet pipe 6-Throttle body assembly 7-intake manifold 8-cylinder 9-muffler

Air intake system (indicated by green arrows)：

air→Air filter intake→Air filter cartridges→Air filter outlet pipe→Throttle valve assembly body→intake manifold→cylinder→silencer

Cylinder head exhaust gas control system (indicated by small red arrows)：

exhaust gas→Cylinder head cover→Cylinder head exhaust pipe→Air filter→Air filter outlet pipe→Throttle body→intake manifold→cylinder→silencer

Gearbox exhaust gas control system (blue arrows indicate):Exhaust gas→ gearbox, exhaust pipe→ air filter, outlet pipe→ throttle body→ intake manifold→ cylinder → muffler

ETC：

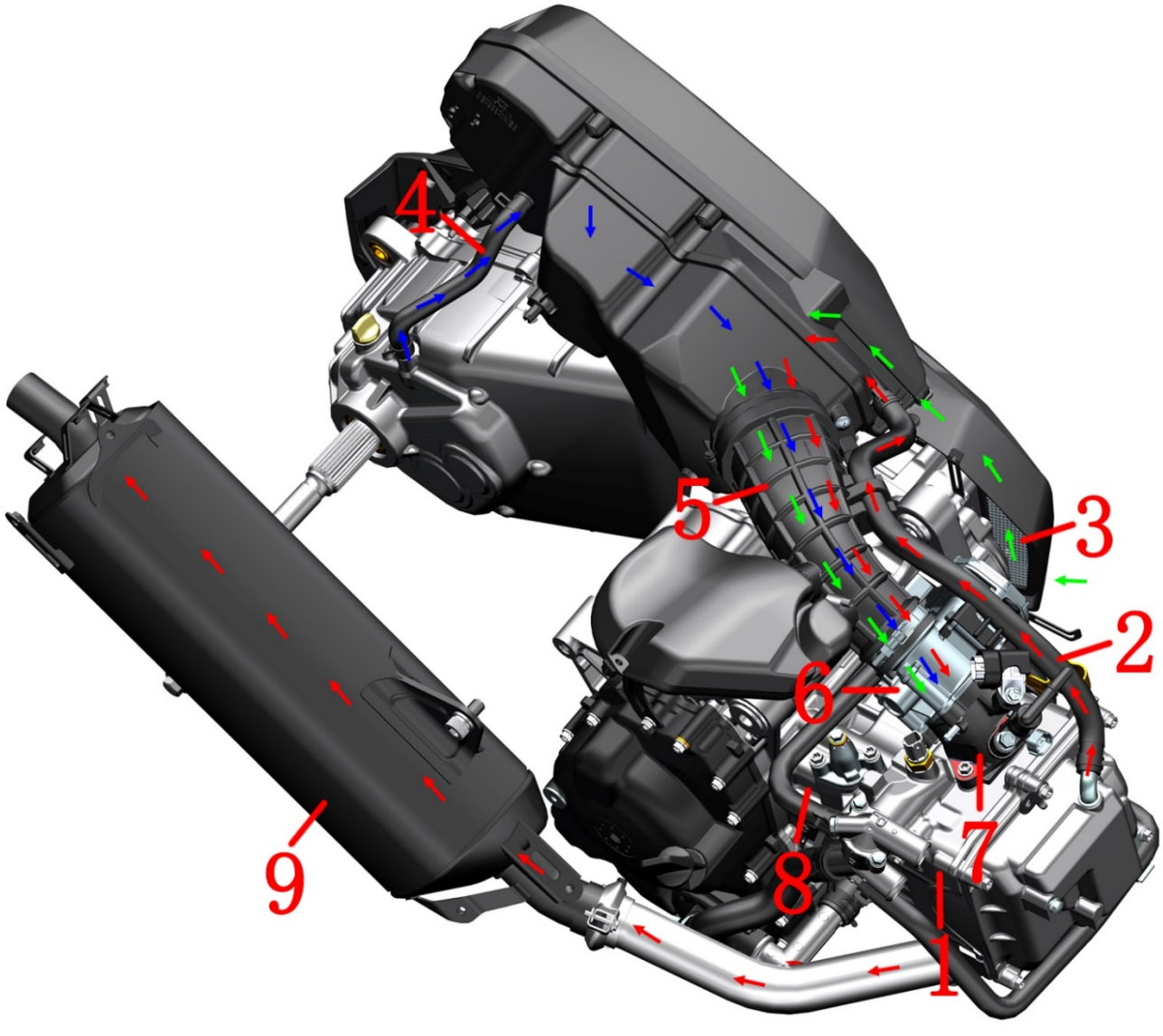

1-Cylinder Head 2-Cylinder Head Breather Pipe 3-Air Filter Inlet 4-Gearbox Breather Pipe 5-Air Filter Outlet Pipe
6-Throttle Body Assembly 7-Intake Manifold 8-Cylinder 9-Muffler

Intake system (indicated by the green arrow):
Air → Air filter intake port → Air filter element → Air filter outlet pipe → Throttle valve assembly body → Intake manifold → Cylinder → Muffler

Cylinder Head Exhaust Gas Control System (indicated by the red arrow):
Exhaust gas → Cylinder head cover → Cylinder head exhaust pipe → Air filter → Air filter outlet pipe → Throttle body → Intake manifold → Cylinder → Muffler

Gearbox Exhaust Gas Control System (indicated by the blue arrow):
Exhaust gas → Gearbox exhaust pipe → Air filter outlet pipe → Throttle body → Intake manifold → Cylinder → Muffler

Tool

			
125-piece tool set	Torque wrench	On-board tools	Claw hammer
			
Pull code	Rubber hammer	Dynamic balancing machine	Tire scraper
			
Oil pan	measuring cup	funnel	Taps, dies
			
micrometer	Depth gauge	Vernier calipers	Feeler gauge

			
Tire pressure gauge	Magnetic mount + dial gauge	PT300 Electrojet Brush Writing Diagnostic Instrument (16PIN)	17# hexagon
			
Hoop pliers	Inner circlip pliers	Circlip pliers	Clamp-on multimeter
			
multimeter	Blow guns		
Some of the above pictures are from the Internet, and the copyright belongs to the original author. Do not use for any other purpose.			

Expansion Nail Description

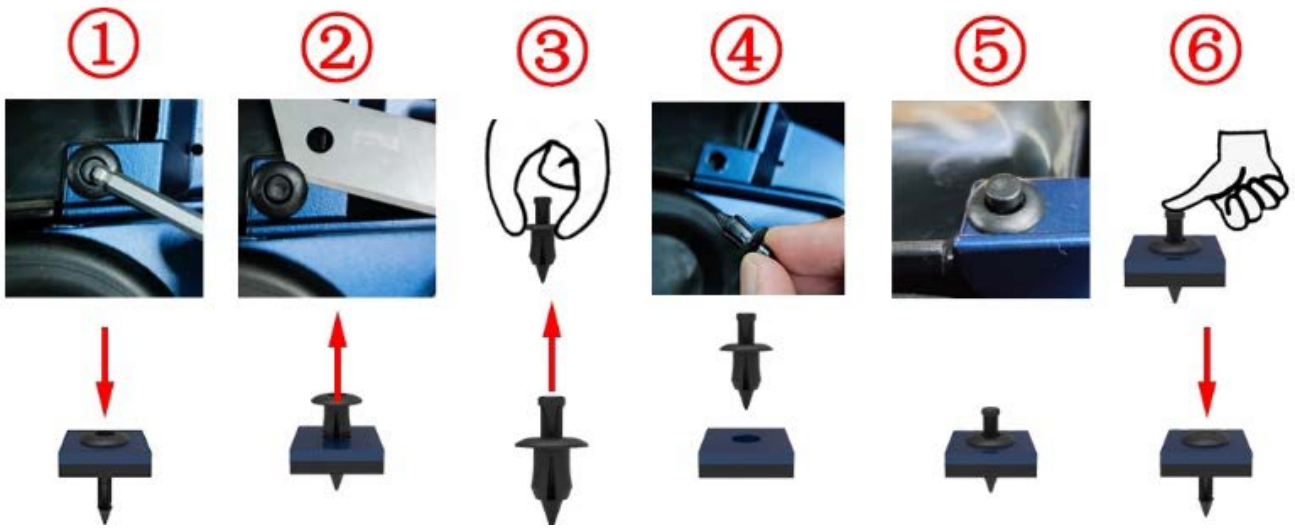

①Press the center cylinder with 4# hexagon or other tools, you can hear a sound or the center cylinder moves axially by 2mm；
②Use a razor, fingernail or carving knife to pry open the gap and remove it; If space permits, reach for the back and push it out；
③Pinch the outer ring with two fingers and push the center cylinder up to the initial position；
④Pinch the center cylinder with two fingers to attach the expansion nail to the mounting position；
⑤The outer ring is attached to the connected parts; If it does not fit, it needs to be checked for misalignment；
⑥Press the center cylinder with your fingers or other tools, you can hear a sound or the top of the center cylinder is basically flush with the top surface of the outer ring, indicating that the assembly is in place.

2.Maintenance

Know Before Service

1.It is necessary to use high-quality tools, or special tools and fixtures designed by our company. Using inferior tools may result in damaged parts, detached plating, inadequate assembly, etc.

2.O-rings, paper gaskets, copper gaskets, component seals, etc. used for sealing must be replaced before assembly.

3.Fasteners with torque requirements need to use a torque wrench to check the torque; Refer to the general-purpose torque value recommended for general-purpose fasteners where torque is not required.

4.It needs to be cleaned before assembly; After assembly, it is necessary to check whether the assembly is correct and in place.

5.The motorcycle should be parked and balanced, and safety should be paid attention to during disassembly. This includes, but is not limited to, the use of power tools, hand tools, pneumatic tools, hydraulic tools, handling. Protect against contact with skin, eyes, burns, electric shock, etc.

6.All kinds of oil, liquid, batteries, etc. that have been replaced need to be uniformly recycled and handed over to qualified institutions for disposal; It is forbidden to dump polluting the environment or water sources at will.

7.Swallowing or inhaling coolant, brake fluid, etc. will cause certain harm to the human body. Wash any exposed skin such as hands and face immediately and thoroughly after each addition. If swallowed, contact a poison control center or hospital immediately; If inhaled, immediately move into a ventilated environment. If it accidentally gets into your eyes, you should immediately rinse your eyes with plenty of running water and seek medical attention in time. Always keep out of reach of children and pets.

8.If you need to clean or wash the body parts of the motorcycle, you should use neutral motorcycle wash liquid or tap water or diesel, kerosene, etc. Acidic or alkaline motorcycle wash liquid will cause irreversible corrosion on the surface of parts, such as paint, electroplating surface, anodized surface, etc.; Gasoline can cause premature aging or hardening of sealants, gaskets, rubber parts, etc., reducing the service life. Non-woven fabrics that do not leave residue should be used for wiping, as ordinary rags may affect the assembly or cause other adverse effects such as cloth shavings or wool.

9.The following are the instructions for disassembling and assembling the expansion nails.

10.If there is a “ ’ symbol on the right side of the step, you can click to quickly jump to the corresponding step.

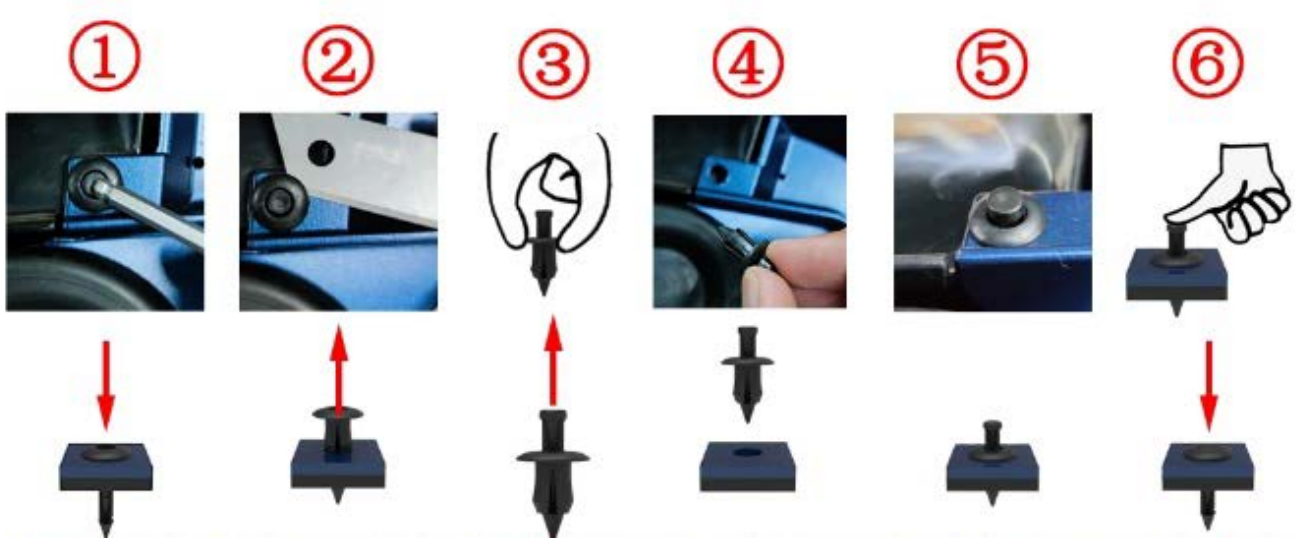

①Press down the center cylinder with 4# hexagon or other tools, you can hear a sound or the center cylinder moves axially by 2mm (0.079 in)；

②Use a razor, fingernail or carving knife to pry open the gap and remove it; If space permits, reach for the back and push it out；

③Pinch the outer ring with two fingers and push the center cylinder up to the initial position；

④Pinch the center cylinder with two fingers to attach the expansion nail to the mounting position；

⑤The outer ring is attached to the connected parts; If it does not fit, it needs to be checked for misalignment；

⑥Press the center cylinder with your fingers or other tools, you can hear a sound or the top of the center cylinder is basically flush with the top surface of the outer ring, indicating that the assembly is in place.

Only some of the basic requirements for the prevention of accidental injuries can be enumerated; It is not possible to exhaustively list all scenarios. Be vigilant during disassembly and assembly to prevent accidents.

Maintenance Cycle Table (24 Models)

I: Check (clean, lubricate, adjust or replace if necessary) R: Replacement T : Tightening ★: Annotation

Inspection items	Drive inspection	Frequency* 1						Regular replacement (inspection)
		× 1000 km	1	4	8	12	16	
		× 1000 mile	0.6	2.5	5	7.5	10	
Cradle cushion rubber					I		I	1 year or 10,000 km (6214 miles) Check once
Air filter (filter element)								Replace every 6,000 km
Engine air inlet filter			R	R	R	R	R	
Muffler bolts and nuts			T		T	T	T	
** spark plug					I		R	
Engine oil	I		R	R	R	R	R	Note 1
Oil Filter			R		R		R	
* Throttle body			I		I			
* Throttle cable clearance			I	I	I	I	I	
Idle			I	I	I	I	I	
* Fuel evaporative pollutant control system					I			
Radiator pipe			I	I	I	I	I	
* Fuel pipe				I				Check for leaks
V- belts							R	Replace every 2 years
** Braking system				I	I	I	I	
Brake hose				I				Check for leaks
Brake fluid				I				Replace every 2 years
** Tire/Wheel	I		I	I	I	I	I	
** Bolts and nuts in steering mechanisms			T	T	T	T	T	
Steering bearings in steering mechanisms				I	I	I	I	
Front shock absorber					I		I	
** Rear shock absorber					I		I	
Internal mechanism of steering lock								
** Bolts and nuts for body and engine mounting			T	T	I	T	I	
Engine suspension				I	I			
Coolant	I		I	I	I	I	I	3 years or 30,000 kilometers (18,641 miles)
Gearbox oil			R		R		R	
** Valve clearance (cold check) Inlet: 0.08 ~ 0.12mm (0.003 ~ 0.005 in) Outlet: 0.18 ~ 0.22mm (0.007 ~ 0.009 in)			Check and adjust every 20,000 km (12,427 miles)					
Driving wheel, driven wheel					I		I	Note 2
Rim spokes	I		I	I				
Muffler anti-scalding plate buffer rubber			I	I	I	I	I	
Air filter oil pipe			I	I	I	I	I	
Main Bracket				I	I	I	I	Clean and lubricate every 6000 kilometers

* This service is provided by dealers or qualified repair organizations , and can be performed by the owner if the owner has the appropriate tools , service information and a certain understanding of mechanics .
**For safety reasons, such items should be provided by dealers or qualified maintenance organizations .

Note 1: The first maintenance is carried out after 1000 kilometers (621 miles) or 3 months (whichever comes first). The second maintenance is carried out when the actual mileage on the instrument reaches 4000 kilometers (2485 miles) . Thereafter, regular maintenance is carried out every 4000 kilometers (2485 miles) or 15 months (whichever comes first).

Note 2: It is recommended to use Shell Gadus S3 V220 C2 extreme pressure grease or high temperature resistant No.2 grease of the same viscosity for maintenance and lubrication of the driving wheel and driven wheel bushing every 10,000 kilometers (6,214 miles) to ensure riding comfort. Transmission system : If the driving speed is found to be significantly reduced, it is recommended to maintain and inspect the CVT transmission system at any time and replace it in advance if necessary.

DANGER

● Initial maintenance should be performed strictly according to the above table, otherwise it may cause motorcycle damage or other unpredictable failures.
● To keep your motorcycle running normally, it is recommended that you have it serviced by a dealer or a qualified repair unit. Improper maintenance or care may cause motorcycle damage or other unforeseen failures.
● Replacing unqualified parts will cause your motorcycle to wear out faster and shorten its service life.
●When checking brake discs, mufflers, spark plugs, coolant, etc., wait until they have cooled down before proceeding.
●When replacing brake fluid and coolant, pay attention to protection to avoid contact with skin and eyes and cause harm. At the same time, avoid dripping onto the surface of parts and damaging the paint or surface.

CAUTION

● Waste generated during maintenance , such as cleaning agents, waste oil , etc., should be properly handled and are prohibited from being dumped at will to avoid causing environmental pollution.
● The items listed above are for normal use . If the product is often used in harsh environments, the frequency of maintenance should be increased .
●The steering system, braking system, electronic fuel injection system, shock absorbers and wheels are all key components and it is recommended that they are repaired by a qualified maintenance unit.

Maintenance Cycle Table (ETC)

I: Check (clean, lubricate, adjust or replace if necessary) R: Replacement T : Tightening ★ :Annotation

Inspection Items	Drive inspection	Frequency*1						Regular replacement (inspection)
		×1000km	1	6	12	18	24	
		×1000mile	0.6	3.7	7.4	11.1	15	
Cradle buffer rubber			I	I	I	I	I	Replace every 30,000 kilometers
Air Filter (Filter Element)				I	R	I	R	★ Annotation 2
Engine air intake filter element			I	R	R	R	R	Replace every 12,000 kilometers
Bolts and nuts of the muffler			T		T	T	T	
** Spark Plug				I	R	I	R	
Engine Oil	I		R	R	R	R	R	★ Annotation 1
Oil Filter			R		R		R	
* Throttle Body			I		I			
* Throttle Grip Free Angle				I	I	I	I	Free Angle: ±0.5°
Idle	I							Startup Check
*Fuel Evaporative Emission Control System					I			
Radiator tube			I	I	I	I		
* Fuel Pipe				I				Check for leaks
V-belt							R	2 years or 20,000 kilometers (12,428 miles)
** Brake System				I		I	I	Check the oil cup level
Brake Hose				I		I	I	Check for leaks
Brake Fluid			I	I	I	I	I	Replace every 2 years
** Tire	I		I	I	I	I	I	Check tire pressure and tread wear
** Bolts and nuts in the steering mechanism			T	T	T	T	T	
** Steering bearing in the steering mechanism				I	I	I	I	Add butter at 15,000 kilometers
**Front Shock Absorber	I				I		I	Check for leaks
** Rear Shock Absorber	I				I		I	Check for leaks
Internal moving mechanism of the faucet lock					I		I	★ Annotation3
** Bolts and nuts for body and engine mounting			T	T	T	T	T	
Engine Suspension				I	I			
Coolant	I		I	I	I	I	I	3 years or 30,000 kilometers (18,641 miles)
Gearbox Oil			R	R	R	R	R	
** Valve clearance (cold check) Inlet:0.08 ~ 0.12mm(0.003 ~ 0.005 in) Outlet: 0.18 ~ 0.22mm(0.007 ~ 0.009 in)			Check and adjust every 20,000 kilometers (12,427 miles)					★ Annotation8
Driving wheel, driven wheel, transmission case					I		I	★ Annotation5-6
Silencer			I	I	I	I	I	★ Annotation4
Air Filter Oil Accumulation Pipe			I	I	I	I	I	
** Vehicle fasteners, bolts, nuts	I		T	T	T	T	T	
** Brake Pad Wear	I		I	I	I	I	I	
Fuel Level	I							
** Wheels, rear swingarm bushings, and oil seals				I	I	I	I	★ Annotation7
Electronic seat lock, electronic fuel tank lock								Clean and lubricate every 4,000 kilometers
Main Bracket				I	I	I	I	Clean and lubricate every 6000 kilometers

* This service is provided by dealers or qualified repair units. Owners who have suitable tools, service information, and a certain understanding of machinery may perform it themselves.
** For safety reasons, this type of project should be serviced by a distributor or a qualified maintenance unit.
★Annotation 1：The first maintenance shall be carried out at the first 1000 kilometers (621 miles) or 3 months (whichever comes first), the second maintenance shall be carried out when the actual odometer reading reaches 6000 kilometers (3726 miles), and thereafter, regular maintenance shall be carried out every 6000 kilometers (3726 miles) or 15 months (whichever comes first).
★Annotation 2：When driving under harsh operating conditions such as humidity or dust, to ensure vehicle reliability and service life, preventive maintenance efforts should be significantly strengthened, and the interval between routine maintenance should be shortened.
★Annotation 3：Check, clean, lubricate, and maintain every 10,000 kilometers (6214 miles). For details, please refer to the official website's "Faucet Lock Maintenance Video".。
★Annotation 4：If the muffler and heat shield of a motorcycle are impacted or scratched by external forces during a reverse, first carefully check the appearance, the firmness of the mounting points, whether the muffler buffer rubber is deformed, and whether there is air leakage after the engine idles. Internal abnormal noises or severe appearance damage usually require replacement. All damaged parts, including the involved lifting lugs, brackets, buffer rubber, and bolts, must be replaced before continuing to ride.
★Annotation 5:① It is recommended that the driving wheel and driven wheel bushings be maintained and lubricated every 10,000 kilometers (6,214 miles) with Shell Gadus S3 V220 C2 extreme pressure grease or high-temperature resistant No. 2 lubricating grease of the same viscosity to ensure riding comfort.② Transmission System: If a significant decrease in driving speed is noticed, it is recommended to perform maintenance and inspection on the CVT transmission system at any time, and replace it in advance if necessary.
★ Annotation 6：The warranty for CVT system failures caused by component quality issues is 1 year or 6,000 kilometers, and the three - package warranty becomes invalid if either limit is exceeded. Normal wear and tear of components during vehicle use is not covered by the three - package warranty, and sensory phenomena that do not affect mechanical performance, such as noise and vibration, are also not covered by the three - package warranty.
★ Annotation 7：Check the wear condition of the oil seal lip, and replenish grease if necessary.
★ Annotation 8：Valve clearance (engine cold state) - intake: 0.08 - 0.12mm, exhaust: 0.18 - 0.22mm.

DANGER

●Initial maintenance shall be strictly carried out in accordance with the above table; otherwise, it may cause vehicle damage or other unforeseeable malfunctions.
●To keep your vehicle running properly, it is recommended that service be provided by a dealer or a qualified repair facility. Improper maintenance or servicing may cause vehicle damage or other unforeseeable malfunctions.
●Replacing substandard parts will cause accelerated wear on your vehicle and shorten its service life.
●When inspecting items such as brake discs, mufflers, spark plugs, and coolant, it should be carried out after they have cooled down.
●When replacing brake fluid and coolant, pay attention to protection to avoid contact with skin and eyes, which may cause injury. At the same time, avoid dripping onto the surface of components, which may damage the paint or surface.

CAUTION

●Waste generated during maintenance, such as cleaning agents, waste engine oil, etc., should be properly disposed of, and random dumping is prohibited to prevent environmental pollution.
●The items listed above are for use in normal environments. If used frequently in harsh environments, the frequency of maintenance should be increased.
●Steering system, braking system, electronic fuel injection system, shock absorber, and wheels are all critical components, and it is recommended that they be serviced by qualified maintenance units.

Air filter (filter), air inlet filter

1.Hold the motorcycle secure

Prop up the motorcycle with the main bracket as shown.



2.Remove the left hood of the engine

a.Press down the center pin of the expansion nail on the inside of the air filter decoration cover with a 4# hexagon corner, and then remove the expansion nail.

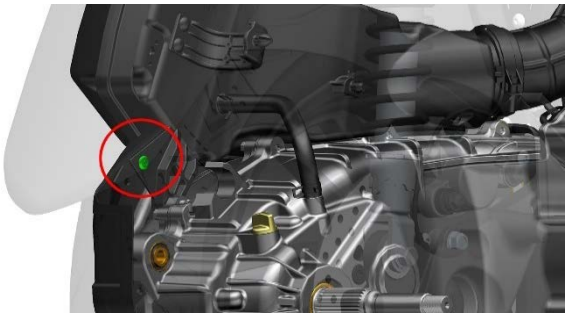

b.Use a T30 torx wrench to remove the torx bolt in the M6×16 hexagonal small flange shown in the figure or remove the M6×14 shaft shoulder bolt with a 4# hexagon socket, the bolt here cannot be removed temporarily, and it can be completely loosened.



c.Use a T30 torx wrench or 8# socket to remove the 3 M6×16 hexagonal small flange torx bolts, flanging bushings and buffer glue as shown in the figure, and be careful not to lose the bushing and buffer glue. Or use 4# hexagon to remove 3 M6×14 shaft shoulder bolts. Press the center pin of the expansion nail of the air filter decoration cover with a 4# hexagon socket to remove the expansion nail. Then remove the trim cover.

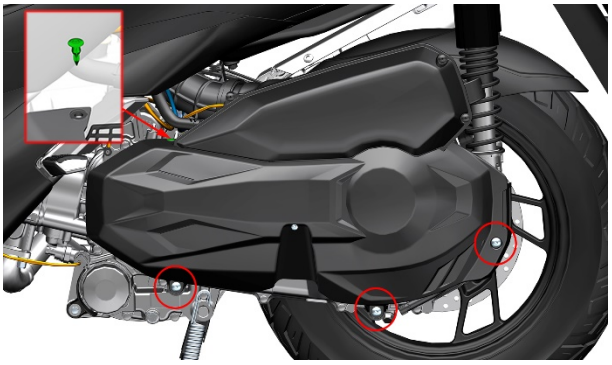

3.Replace the air inlet filter

a.Use a Phillips screwdriver to remove the self-tapping nails that come with the 5 air inlet sponge filter cartridge assemblies. Remove the air inlet sponge after removing the front case. After replacing the new sponge, put the front shell back on, taking care that the screws should be installed vertically and the torque should not be too large. The inlet sponge filter is replaced every 4000 km (2485 miles) or 15 months (whichever comes first).

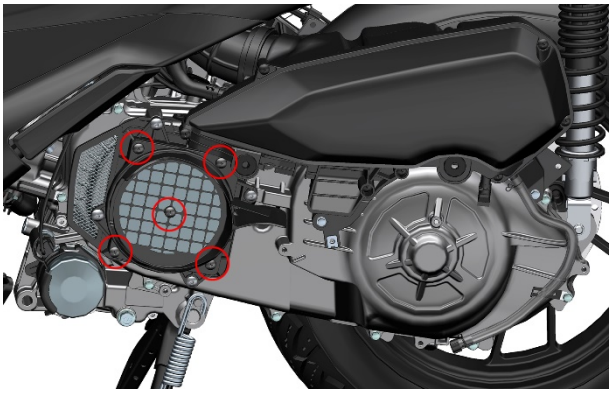

b.Remove the sponge and replace with a new filter, keeping the black side facing the engine and the white side facing outward.



4.Remove the air filter housing

a.Use a Phillips screwdriver to remove 10 self-tapping nails.

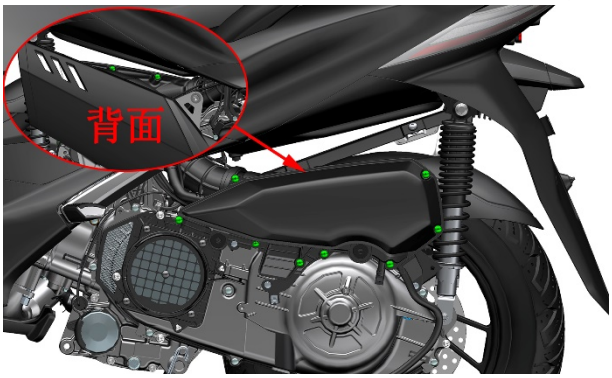

b.Remove the air filter housing.

5.Replace the air filter element

a.Use a Phillips screwdriver to remove the 4 screws that come with the air filter to secure the filter element.

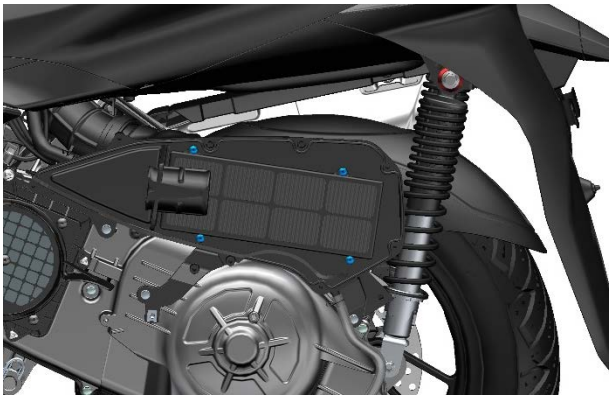

b.Remove the old air filter cartridge. Use a dust gun to blow the dust on the inside of the air intake pipe, and then wipe the inner wall clean with a clean non-woven fabric.

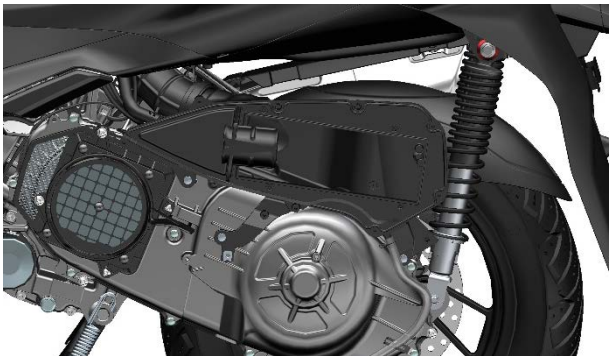

c.Replace the filter element and sealing strip with a new one.

6.Check the waste oil pipe of the air filter

Observe the waste oil drain for dirt or water accumulation. If there is, remove the waste oil pipe clamp ① with pliers, pull out the black plug, and replace the waste oil or sewage after draining it. Pay attention to increase the frequency of inspections when the air humidity is high. If there is too much dirt inside the hose, be sure to check the air filter for excessive dirt or damage and replace the air filter if necessary.

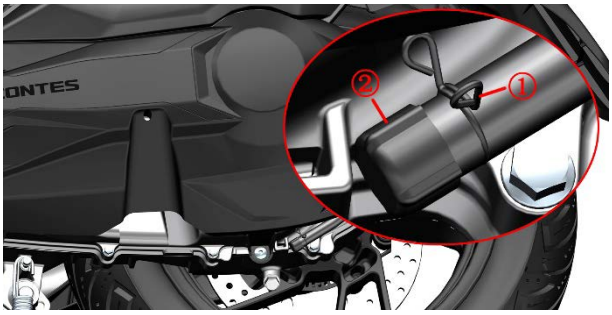

7.Reloading

Replace it as per the removal procedure.

DANGER

●The motorcycle must be parked on a level, stable ground or lifting platform.

WARNING

●Air filter cartridges are inspected every 4,000 km (2,485 miles) or 15 months (whichever comes first) and replaced every 8,000 km (4,971 miles) or 30 months (whichever comes first). The inlet sponge filter is replaced every 4000 km (2485 miles) or 15 months, whichever comes first.

●The air filter and engine air inlet filter should be cleaned regularly according to the regular maintenance and lubrication table.

●If you often ride in wet or dusty areas, you should have your air filter filters serviced more often. Always check the air filter drain line frequently.

●If the filter element is broken, it must be replaced, otherwise the dirt will be directed towards the engine, causing engine damage.

●Make sure the filter is in place.

CAUTION

●If the air filter is clogged with dust, it will increase the intake resistance and decrease the output power.

●If the engine air inlet filter is clogged with dust and the intake resistance increases, the heat dissipation of the belt will be reduced, affecting the life of the belt.

●If the replacement cycle is not reached, if there is no damage and the surface of the filter element is relatively clean, you can use a dust gun to blow air from the clean side of the filter element to blow away the dust on the surface of the filter element.

●Water should not be allowed inside the air filter when flushing the vehicle.

Bolts, nuts for mufflers

Check if there is any air leakage at the engine exhaust port.

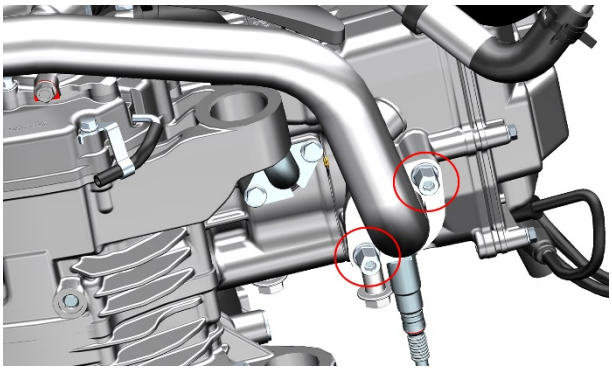

a.If there is a slight air leak, you can first try to tighten the exhaust port nut with a 6# hexagon socket wrench; if the problem persists, you will need to remove the muffler and replace the engine exhaust port gasket with a new one.

b.If there are no signs of air leakage, use a 6# hexagon socket to check whether the M8 nut at the engine exhaust port is loose.

c.If necessary, remove the muffler heat shield.

368K (24 items)

Use an 8# hex key to remove the M10 bolt securing the upper part of the muffler, and use a 14# socket to remove the two M10 bolts at the bottom. Use a 6# hex key to remove the M8 bolt on the inner side, loosen the clamp, and then the rear section of the muffler can be removed.

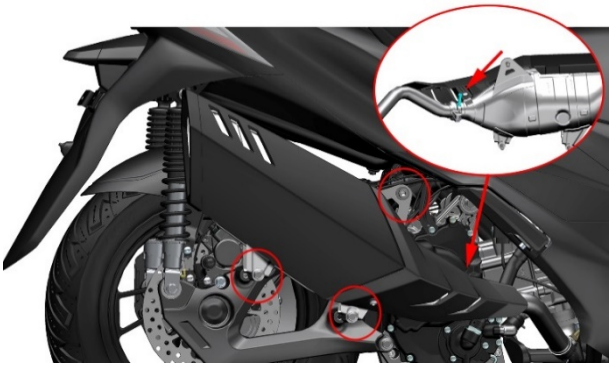

368K (ETC Model)

Use a 6# hexagon socket to remove the inner M8 bolt. After loosening the clamp, use a 13# socket to remove the two M10 bolts, and then the rear section of the muffler can be removed.

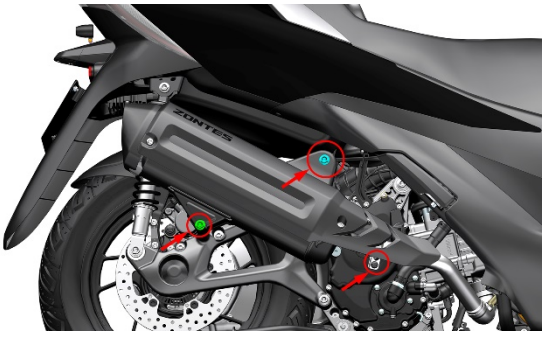

DANGER

●Do not touch any metal surface of the muffler while the engine is running or after riding to prevent burns.

●The vehicle must be parked on a flat, stable surface or lift platform.

●If a new exhaust port gasket needs to be replaced, the operation must not begin until the muffler has completely cooled down.

WARNING

●Do not rev the engine at idle for an extended period.

●Driving at low speed under heavy load for an extended period can cause damage to the engine and muffler.

●Do not use leaded gasoline to prevent the catalyst from failing and losing its exhaust gas purification ability.

CAUTION

●If it is necessary to remove the muffler for other operations, it is recommended to cover the intake and exhaust holes of the muffler with masking tape to prevent foreign objects from entering.





●Keep the drain hole at the bottom of the muffler unobstructed to prevent condensate from accumulating inside the muffler cavity.

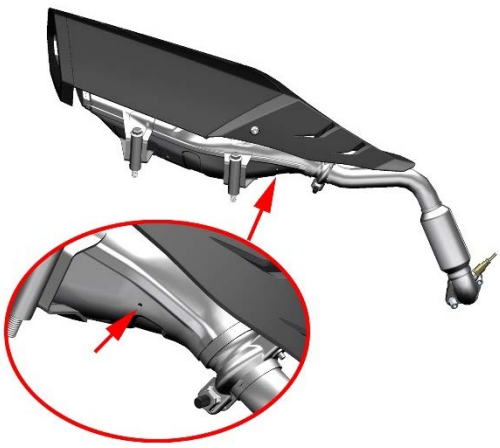

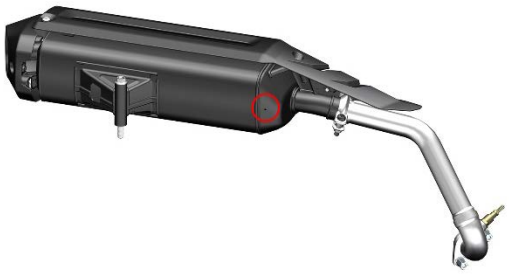

●Oil stains, dirt, and other contaminants on the surface of the muffler should be promptly cleaned up.

Engine Oil

DANGER

●The vehicle must be parked on a flat and stable surface or lift platform.

●Operation can only be carried out after the engine and muffler have cooled down.

●When adding engine oil, it is necessary to prevent oil from dripping onto the surface of the muffler.

●Motor oil should be kept away from children and pets. Short-term contact with motor oil may irritate the skin. Please wear long-sleeved clothing or arm sleeves and anti-shake gloves before performing oil change operations. If motor oil accidentally gets on your skin, clean it thoroughly with soapy water.

●The replaced waste engine oil must be collected uniformly and handed over to professional institutions for proper disposal. It is prohibited to dump it casually, pour it into trash cans, or directly spill it on the ground, etc.

WARNING

●Engine oil and gearbox oil shall be replaced according to the periodic table specified in the instruction manual.

●It is necessary to purchase regular and qualified engine oil, as poor-quality engine oil will exacerbate engine wear, and in severe cases, it may lead to engine failure and shorten the service life.

●The engine oil level should meet the requirements; too much or too little may cause engine damage.

CAUTION

●Both copper gaskets and combined gaskets need to be replaced after disassembly; it is recommended to replace both O-rings and gaskets.

●O-rings need to be properly assembled to avoid trimming.

●After removing the dipstick and filler cap, it is necessary to prevent foreign objects from falling into the engine.

1. Drain the engine oil

a.Start the vehicle, let it idle for 3 - 5 minutes, then turn it off for 3 - 5 minutes (when the temperature is below 10°C (50°F), the idling time should be appropriately extended).

b.Use the main stand to park the vehicle securely.

c.Rotate the oil dipstick (1) on the right side of the engine counterclockwise, and remove the oil dipstick (1) and O-ring (2). Leave the oil dipstick on the oil filler opening without removing it to prevent foreign objects from falling into the engine.

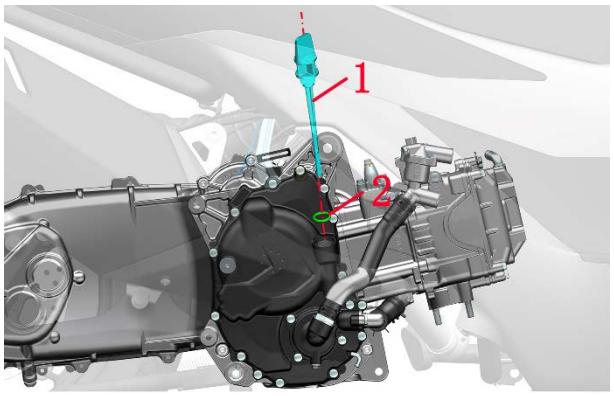

d.Place an oil drain pan under the oil drain bolt, then use a 14# socket to remove the M12×1.5×15 oil drain bolt (3) and the 12×ϕ20×2 combined seal (4) gasket.



e.Wipe the joint surface clean with non-woven fabric. Check if the joint surface of the oil drain bolt (3) is scratched; if so, replace it with a new one, and if not, wipe it clean.

f.Replace the new combined gasket (4), and reinstall the oil drain bolt (3) and combined gasket (4) onto the engine housing using a 14# socket. Torque: 25 N.m (2.6 kgf.m, 18 lbf.ft).

2. Replace the fine filter

a.Remove the battery strap buckle and then remove the oil filter guard plate.

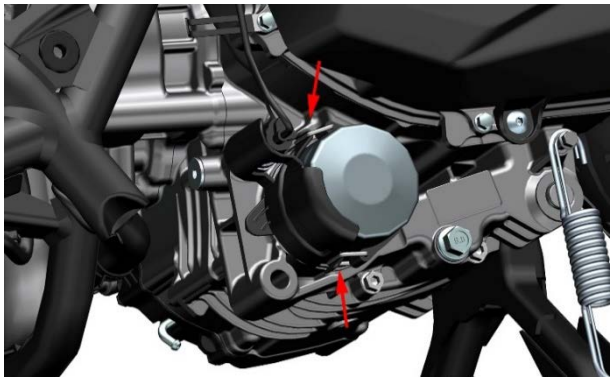

24 models

Use a T25 Torx wrench to remove the M6 shoulder bolt as shown in the figure, and then the oil filter guard plate (ETC) can be removed.

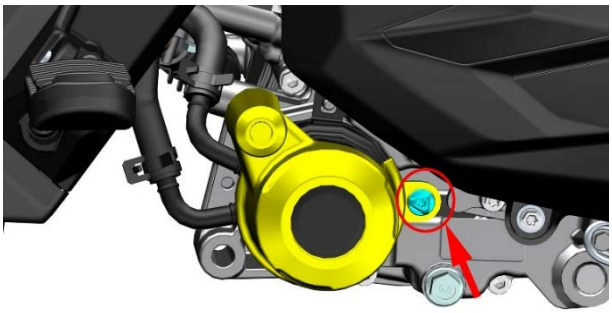

ETC

b.Place an oil drain pan under the fine filter cover, use a 14-sided 65mm cap-type filter wrench + a 1/2" (12.5mm) ratchet wrench to rotate counterclockwise to remove the fine filter. The Sata model number of the filter wrench is 97401.



c.Drain the engine oil from the fine filter.



d.Wipe off the residual engine oil, impurities, etc. on the engine with a clean non-woven fabric.

e.Apply a layer of engine oil to the new fine filter seal ring and then install it on the engine. Torque: 20 N.m (2 kgf.m, 15 lbf.ft).

Note that the sealing ring must not be omitted, and before assembly, it is necessary to check whether the surface of the sealing ring has defects such as damage or hardening.

f.Apply a layer of engine oil to the new fine filter seal ring and then install it on the engine. Torque: 20 N.m (2 kgf.m, 15 lbf.ft).

Note that the sealing ring must not be omitted, and before assembly, it is necessary to check whether the surface of the sealing ring has defects such as damage or hardening.



3. Add engine oil

a.When replacing the filter element, use a measuring cup to fill 1.75L (1.85 US qt, 1.54 lmp qt, 0.46 US gal, 0.39 lmp gal) of new API SN grade or higher grade motorcycle-specific engine oil with a viscosity of SAE5W-40/10W-40/10W-50. When not replacing the filter element, use a measuring cup to fill 1.55L (1.64 US qt, 1.36 lmp qt, 0.41 US gal, 0.34 lmp gal).

b.After removing the dipstick, use a funnel and measuring cup to add oil to the oil filler port on the right crankcase cover of the engine.



c.Wipe the fuel filler clean with non-woven fabric.



d.Check if O-ring (2) is damaged or aged. If not, wipe it clean; if so, it needs to be replaced. The specification of the O-ring used for the dipstick is: 18×3×3.5.

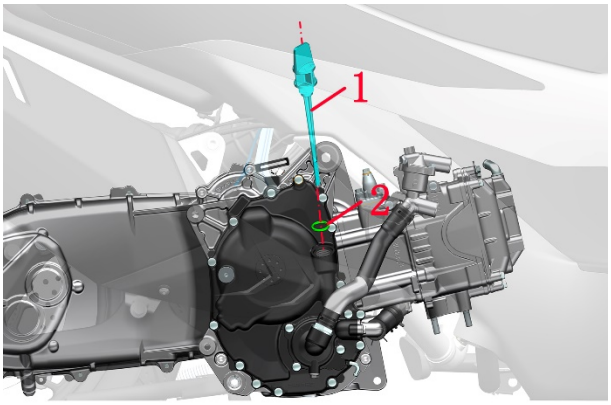

e.Wipe the dipstick clean, then use your hand to rotate clockwise to reinstall the dipstick (1) and O-ring (2) onto the right crankcase cover of the engine.

4. Replace gearbox oil

a.Rotate the filler cap nut (1) counterclockwise, then remove the nut (1) and O-ring (2). The O-ring used for the filler cap nut has the specification: 13.8×2.5. Leave the nut (1) on the filler opening without removing it to prevent foreign objects from falling into the engine.

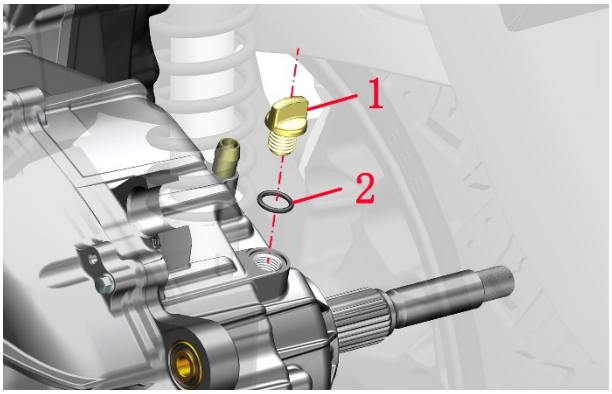

b.Place an oil drain pan under the rear of the left engine. For the ETC model, use a 10# socket; for the early 24 model, use a 14# socket, and the currently produced models use a 10# socket; loosen the oil drain bolt (3) counterclockwise.

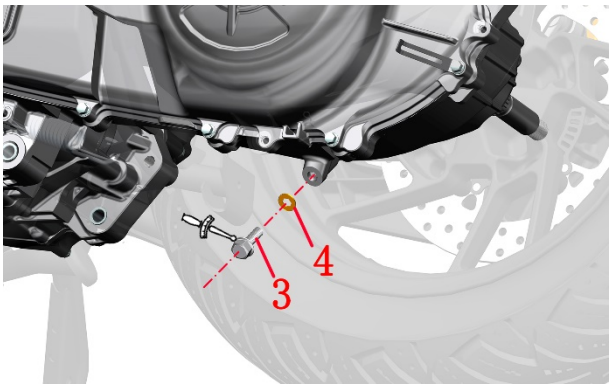

c.Remove the M8×25 oil drain bolt (3) and the 8.3×16×1.5 copper gasket (4).

d.After the gearbox oil has completely drained, wipe the surface of the oil drain port clean with non-woven fabric.

e.Replace the new copper gasket (4), check if the mating surface of the oil drain bolt (3) is scratched, and if not, wipe it clean and reinstall it in order. Torque: 20 N.m (2 kgf.m, 15 lbf.ft).

f.Use a measuring cup to fill 0.2 L (0.21 US qt, 0.18 imp qt, 0.05 US gal, 0.04 imp gal) of engine oil or gearbox oil.

g.Check if O-ring (4) is damaged or aged. If not, wipe it clean; if so, it needs to be replaced.

h.Wipe the nut (3) and the oil filler clean with non-woven fabric. First, put the O-ring (4) onto the nut (3), and then manually rotate it clockwise to reinstall it at the gearbox oil filler.

5. Confirm the oil level

a.After starting the vehicle and letting it idle for a few minutes, check whether there are any leaks at all disassembled positions; if so, troubleshooting is required.

b.After the engine has been idling for 5 minutes, turn it off for 3 minutes, then check whether the engine oil level meets the standard. If it does not, drain or top up the oil to the standard level.



Throttle Body

Note:

- The throttle body sensor and stepper motor must not be immersed in any liquid.
- Do not adjust the idle adjustment screw on the valve body.
- The steps for 368K 24 models/368K (ETC) are basically the same and can refer to the steps for 368K 24 models.

1. Clean carbon deposits without disassembling the throttle body

a.During the ride, on the premise of not affecting safety and complying with traffic regulations, appropriately increase the throttle to raise the engine speed to above 7000 rpm and continue riding for no less than 2 minutes. High-speed scavenging can effectively remove carbon deposits.

b.Use regular and qualified fuel additives and add them according to the specified amount. Frequent use may cause damage to the fuel supply pipeline.

2. Disassemble the stepper motor and clean the carbon deposits

a.Grasp both sides of the storage box partition (1) with your hands, remove the partition, and then gradually pull open the anti-wear pad (2) from the edge gap of the storage box. Note: The seat cushion does not need to be removed when disassembling the storage box separately.

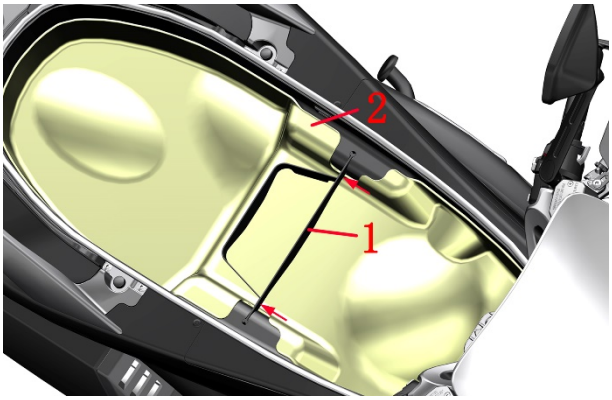

b.Refer to the steps in "Removal of Rear Armrest" to remove the rear armrest assembly. Use a T25 Torx wrench to remove the six M6×14 shoulder bolts (3).



c.Slightly lift the rear of the storage box until the wiring harness connector on the left side of the storage box is exposed. Unplug the ambient light plug located on the left side of the storage box, and then completely remove the storage box after unplugging the plug.

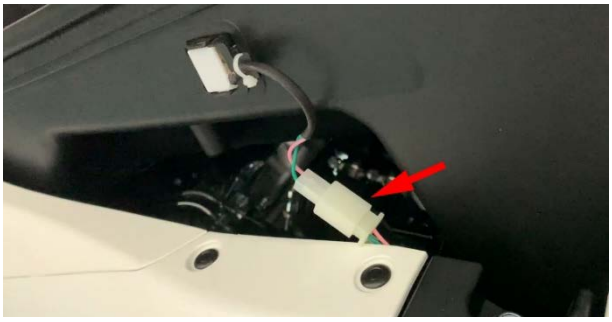

d.Unplug the plugs of stepper motor ① and sensor ②.

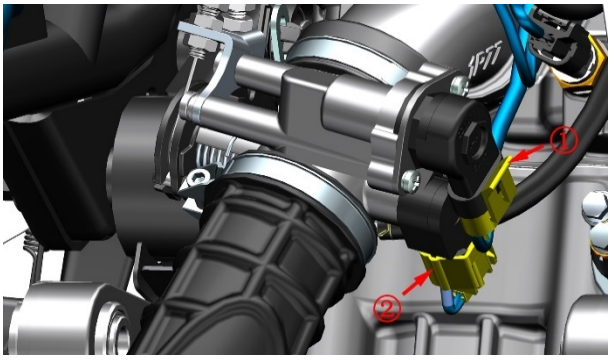

e.Use a short Phillips screwdriver to remove the two bolts ③ and anti-drop card ④ that come with the throttle body assembly, and then remove the stepper motor (4).

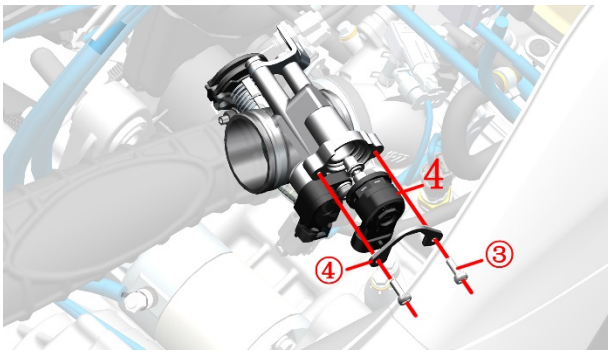

f.Use throttle body cleaner to clean the carbon deposits on the head of the stepper motor. Spray a small amount of cleaner into the valve body hole. Do not soak the stepper motor in any liquid.



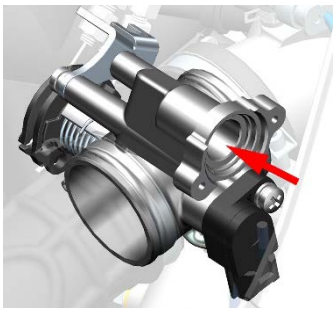

g.Install the stepper motor back onto the valve body, ensuring that the sealing ring is not omitted. Plug the connector back in.

3. Remove the throttle body assembly to clean carbon deposits

a. Unplug the plugs of stepper motor ① and sensor ②.

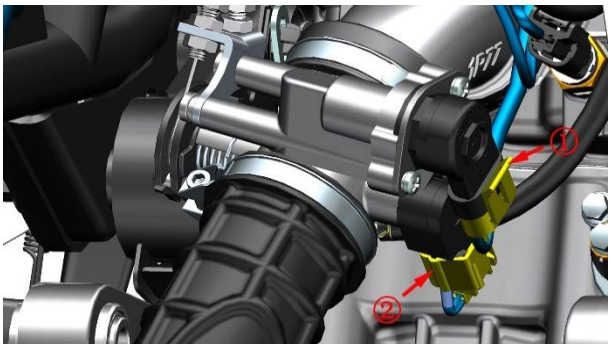

b.Place a small container under the high-pressure oil pipe, press the buckle indicated by ③ while pulling out the high-pressure oil pipe (1) in the direction of the arrow. A small amount of fuel will flow out when pulling out, and it is prohibited to drip onto the surface of the parts.

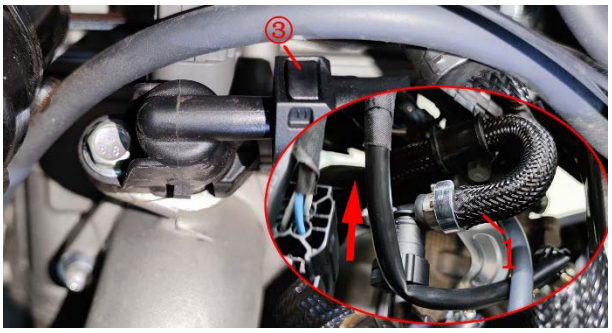

c.Find the circlip (2) at the bottom of the valve body, pinch both ends of the circlip with your hand and move it outwards, then pull out the desorption tube (3).

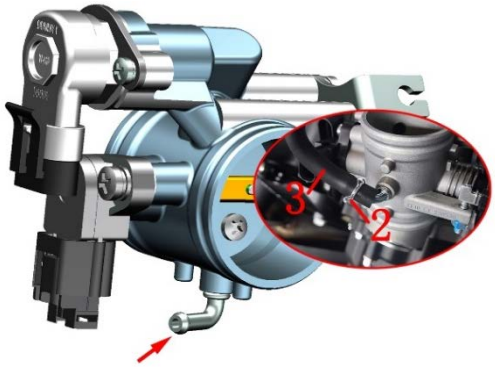

d.After loosening the bolts of the clamp (4) with a 4# hexagon socket wrench, pull out the air outlet pipe (5) of the air cleaner and the clamp (4) from the throttle body in the direction of the arrow.

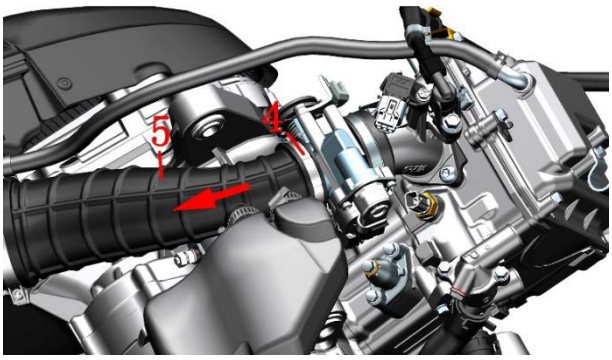

e.Remove the 2 bolts (6) with a 5# hexagon socket wrench, then remove the valve body assembly from the engine.

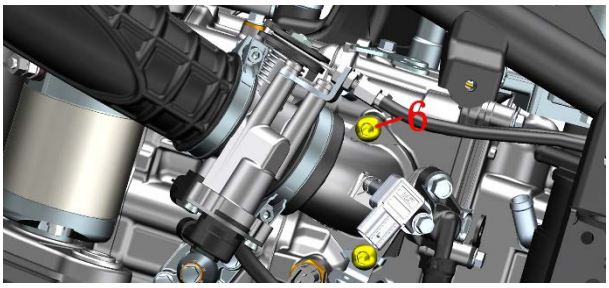

f.Remove the heat insulation pad and O-ring assembly, then remove O-ring (10). Loosen clamp (9) with a 4# hexagon socket wrench, then separate the intake manifold from the valve body assembly. Loosen the two nuts of the fuel filler line (8) with two 10# open-end wrenches, then pull it outwards to remove it from the bracket; remove the cylindrical head of the throttle cable from the turntable. After loosening the two nuts of the return fuel line (7), completely loosen the bottom nut from the threaded sleeve, then pull the bracket towards the axis, not directly outwards, and remove the cylindrical head of the return fuel line from the turntable.

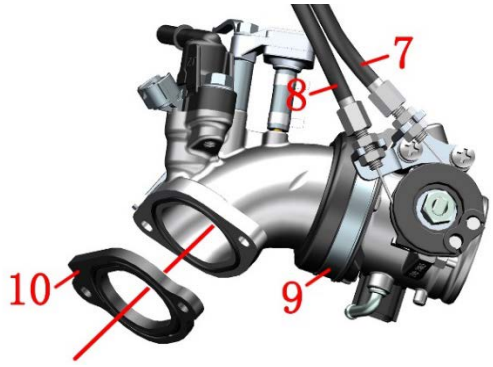

g.Use throttle body cleaner to clean the carbon deposits on the intake manifold and the outlet of the throttle body respectively. Do not directly soak the throttle body assembly and intake manifold assembly with any liquid.

h.After cleaning the heat shield thoroughly, replace two new O-rings (10) and install them in place. Wipe clean the contact surface between the intake manifold and the heat shield, as well as the contact surface between the heat shield and the engine end face. Reverse the disassembly sequence to reinstall all components in place.

4. Remove the sensor from the throttle body valve

a.The sensor needs to be removed for troubleshooting only when the idle speed is abnormal, the engine is prone to stalling, and the issues caused by the spark plug and high-voltage coil have been ruled out. Under normal circumstances, it should not be disassembled.

b.Refer to the steps for cleaning carbon deposits without removing the throttle body to unplug the plugs of stepper motor ① and sensor ②.

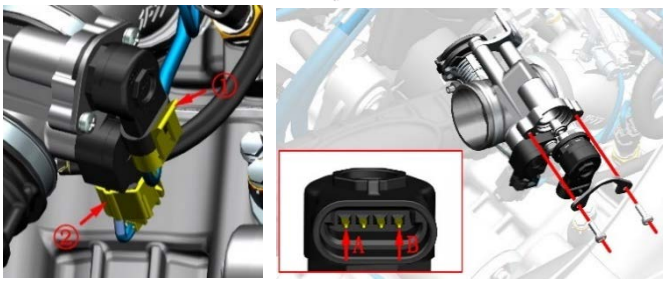

Simple test method: After turning off the power, remove the stepper motor without unplugging the cable plug. When turning on the power, press the flameout switch without ignition, check if the motor plug can contract and retract back and forth, and finally turn off the flameout switch to check if the plug returns to its original position.

To check if the stepper motor is abnormal, you can measure whether the resistance between terminals A and B is 53±5.3Ω.

c.Use a short Phillips screwdriver to remove the GB9074.4 M5×16 bolt ③ that comes with the throttle body assembly, and remove the position sensor ④. When reinstalling, pay attention to aligning the shaft ⑤.

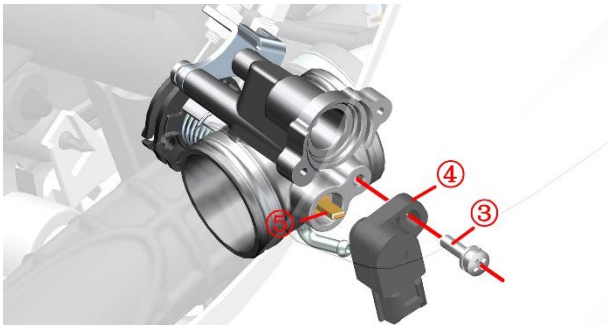

Simple test method:Connect the entire vehicle to the diagnostic instrument, press the ignition switch (no need to start the engine), turn the throttle grip from the initial position to fully open, and check during this process whether the throttle position signal changes from 0 to 100 accordingly.

Output voltage value of position sensor at idle position:0.7±0.1V; Full Open Position:3.6-3.9V, Input Voltage:DC5V±0.1V.

Check the external intake air pressure sensor:

Loosen the connector and check if the pins are skewed or broken.

Connect the vehicle to the diagnostic instrument, no need to start the engine, detect engine parameters, and check if the pressure parameters are consistent with the local atmospheric pressure.

d.If it is necessary to remove the intake pressure sensor, grasp the bushing (2) firmly and then remove the bolt (1) using an 8# short socket. If it is inconvenient to operate, the battery and electrical component box can be removed first and then proceed. Use pliers to clamp the bottom clamp, move it up to the top, and then remove the intake pressure sensor connecting hose (3) and the sensor together. Then remove the hose from the sensor.

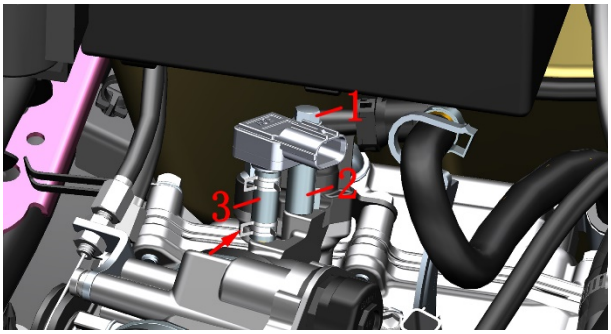

5. Throttle Body Fault Troubleshooting Procedure

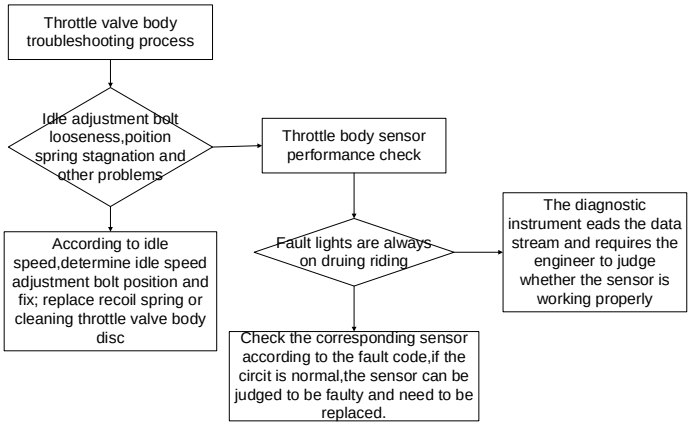

⚠WARNING

●The motorcycle must be parked on a level, stable ground or lifting platform.

●Operation is required to wait for the engine and muffler to cool down.

●When disassembling the high-pressure oil line, it is necessary to prevent fuel from dripping onto the surface of the part.

●Smoking and telephone calls are prohibited in the workplace.

⚠CAUTION

●If the throttle body is removed to clean up the carbon deposit, it should be operated in a dust-free and dust-free environment to prevent dust from entering the engine.

●Foreign objects should be prevented from falling inside the engine or air filter.

●If the stepper motor, sensor and thermal insulation pad are removed, do not miss the sealing ring and ensure that the sealing ring is assembled in place and does not have trimming.

●Never use carburetor cleaner or compressed air to clean the throttle body.

●After reinstalling the battery, the EFI system needs to be reset. Here's how:

a.Unlock the motorcycle and support the main bracket;

b.Pinch the brakes and start the vehicle;

c.Pull the engine speed above 3000 rpm；

d.After releasing the accelerator, turn off the kill switch and lock the car；

e.Wait for 5 seconds and unlock the motorcycle again to complete the EFI system Bit.

Throttle Cable (24 models)

1. Check

a.Check if the right handlebar rubber sleeve and throttle cable are damaged.

b.Check whether the rotation of the right handle rubber sleeve is smooth and whether it can automatically return to its original position.

c.Hold the handlebars with both hands and turn them to the sides while simultaneously rotating the rubber grip on the right handlebar. After each turn of a certain angle, confirm whether the throttle can return to its normal position. If it cannot return, lubricate the cable or the inside of the right handlebar; or replace the throttle cable or the rubber grip on the right handlebar.

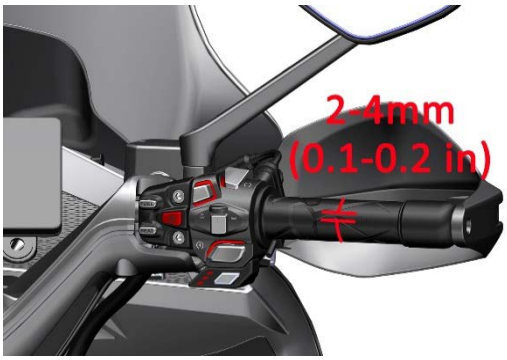

d.After starting the engine, turn the steering handle left and right to ensure that the idle speed remains unchanged during the steering process, then turn off the engine.

e.Turn the right handle to check if the cable clearance of the rubber sleeve is between 2 and 4 mm (0.1～0.2 in) .

2. Adjust the throttle cable clearance

a.Secure the adjusting solenoid ② with an 8# open-end wrench, then use a 10# open-end wrench to loosen nut ① counterclockwise. Rotating the adjusting solenoid ②

clockwise reduces the free travel, while counterclockwise rotation increases it; adjust the clearance to the specified value. After adjusting the clearance, tighten nut ①.

Torque: 3.8 N.m（0.4 kgf.m,2.8 lbf.ft）.



b.If the above adjustment fails to achieve the desired effect, you can refer to the description in "Disassemble the throttle body assembly to clean carbon deposits" to disassemble the throttle body assembly. Use a 10# open-end wrench to loosen the two nuts on the bracket for adjustment.

Torque: 3.0 N.m（0.3 kgf.m,2.2 lbf.ft）.

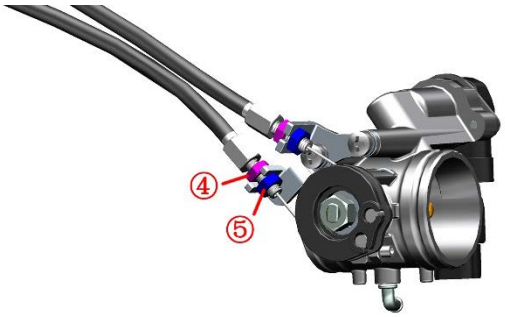

c.If neither of the above two adjustments is effective, a new throttle cable needs to be replaced.

368K（ETC）

Electronic throttle models do not require adjustment of the free angle.

Idle speed

Note:

●Before checking the idle speed, other engine maintenance items should be checked and the condition is normal before proceeding.

●The following items should be checked before checking the idle speed:

Maintenance reminder light“🔧” should not be lit up.

The spark plug status has been checked.

The air filter and air inlet filter have been inspected or replaced.

Check the throttle clearance.

●The limit screws on the valve body are not allowed to be adjusted without permission.

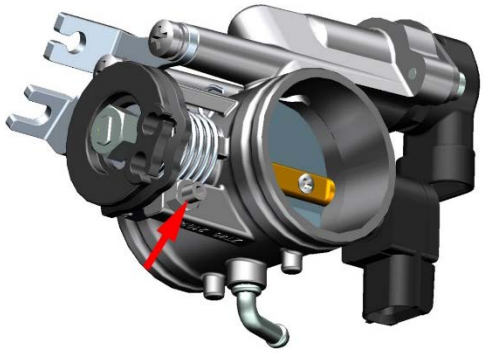

Check the idle speed：

Checking the idle speed of the engine should be done with a hot engine.

The engine idle range should be 1500-1700 rpm.

If the idling speed is not within the standard range or the idle speed is turned off, it should be checked and handled by professional service personnel at the ZONTES special maintenance point or qualified maintenance unit.

Abnormal idle speed or flameout should be checked or repaired according to the troubleshooting process in the chapter "EFI System" in this manual.

Fuel evaporative pollutant control system

24 models:

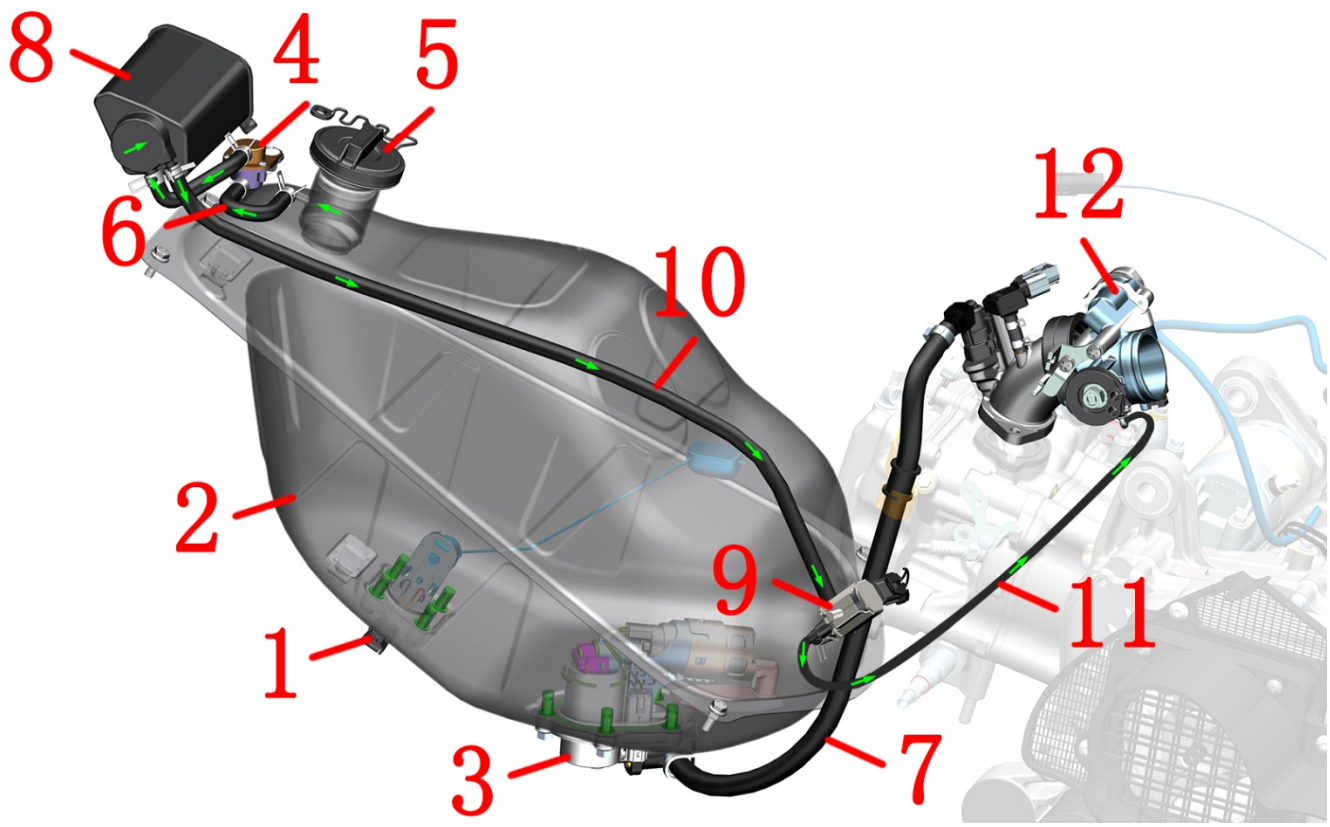

1-Oil level sensor 2-Fuel tanks 3-Fuel pump 4-Air-oil separator (welded inside the tank) 5-Fuel tank cap 6-Adsorption/ventilation tubes7-High-pressure tubing 8-Carbon canisters 9-Canister solenoid valve 10-Solenoid valve intake pipe 11-Solenoid valve outlet pipe 12-Throttle body assembly

Fuel evaporation：
Hydrocarbon→Air-oil separator (inside the tank)→Adsorption/ventilation tubes→Solenoid valve intake pipe→Solenoid valve outlet pipe→Throttle body assembly→intake manifold→cylinder

Only after removing the coverings can you inspect the evaporative emission control system.

Inspect the carbon canister for any cracks or damage.

Check the adsorbent/vent tube for cracks or damage.

Verify the proper functioning of the carbon canister solenoid valve.

Inspect the inlet and outlet air tubes of the solenoid valve for cracks or damage.

Check all hoses for any bends that may restrict airflow.

ETC：

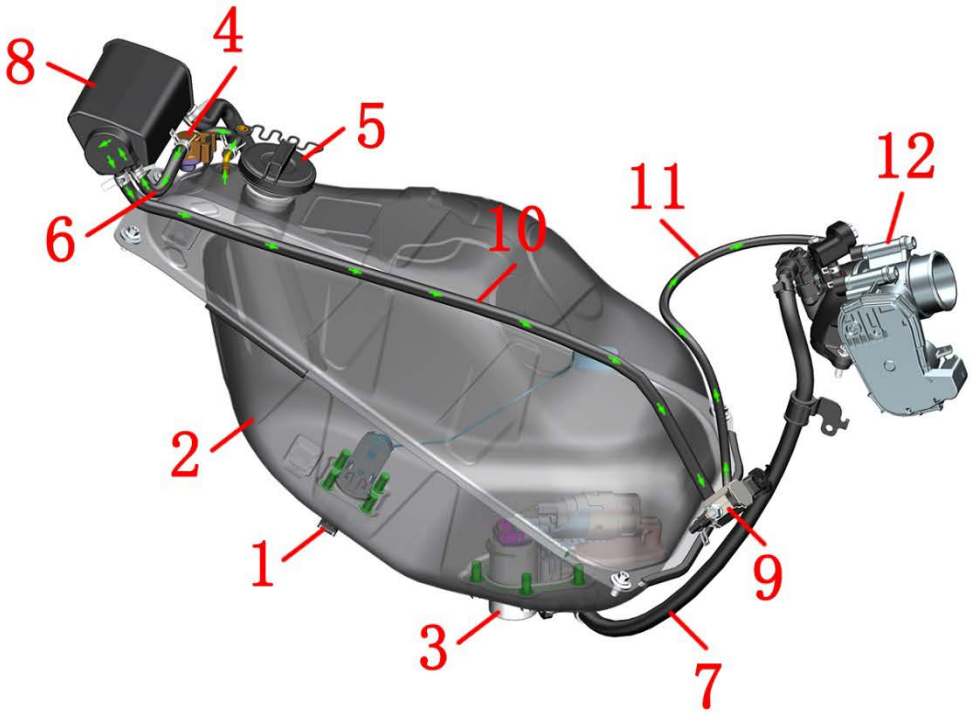

1-Oil level sensor 2-Fuel tank 3-Fuel pump 4-Oil-gas separator 5-Fuel tank cap 6-Adsorption/vent tube 7-High-pressure oil pipe 8-Carbon canister 9-Carbon canister solenoid valve 10-Solenoid valve intake pipe 11-Solenoid valve outlet pipe 12-Throttle body assembly

Fuel evaporation:
Oil and Gas→Oil and Gas Separator→Adsorption/Vent Pipe→Solenoid Valve Intake Pipe→Solenoid valve outlet pipe→Throttle body assembly→Intake Manifold→Cylinder

Only after removing the coverings can you inspect the evaporative emission control system.
Inspect the carbon canister for any cracks or damage.
Check the adsorbent/vent tube for cracks or damage.
Verify the proper functioning of the carbon canister solenoid valve.
Inspect the inlet and outlet air tubes of the solenoid valve for cracks or damage.
Check all hoses for any bends that may restrict airflow.

Fuel lines

Note:

●When disassembling the high-pressure oil pipe, a small amount of fuel will flow out, and it needs to be undertaken with an oil tray.

●Work should be carried out in an open and ventilated place. Smoking, phone calling, and all other behaviors that may cause sparks are prohibited at the work site.

1.The fuel line should be inspected for leaks using an endoscope with LED lights



368K



The picture above is a schematic of the equipment with LED endoscope, the picture comes from the Internet, and the copyright belongs to the author of the original picture. Do not use for any other purpose.

2.Replace the high-pressure oil line

a.According to the steps of "Disassembly of Rear Storage Box" in the maintenance manual, remove the rear storage box to the following figure.

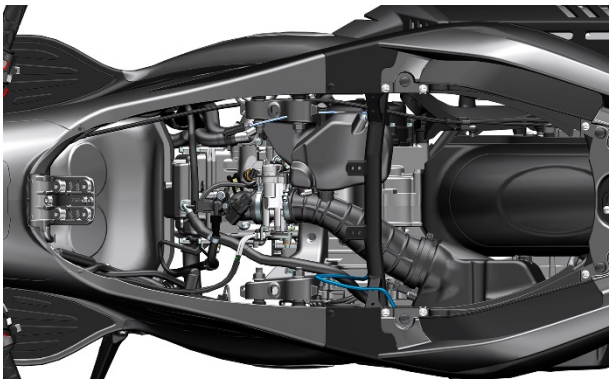

b.Use a T25 torx wrench to remove the 4 shoulder bolts (1) of M6×14 on both sides and the 4 expansion nails (2) in the middle. Remove the bottom of the lower bracket (3).

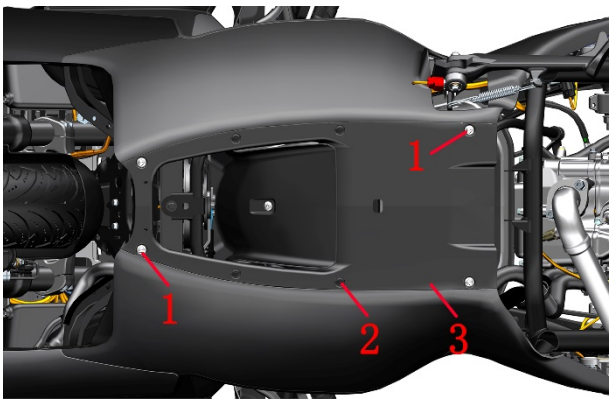

c.Unplug the fuel pump and start the engine to idle until the engine stalls. Turn the engine off switch to "", and lock the motorcycle after powering off.

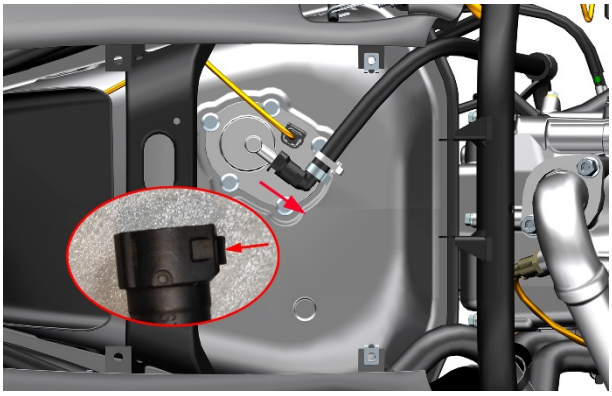

d.After pressing the anti-release lock at the fuel injector, pull out the high-pressure oil pipe in the direction of the arrow.

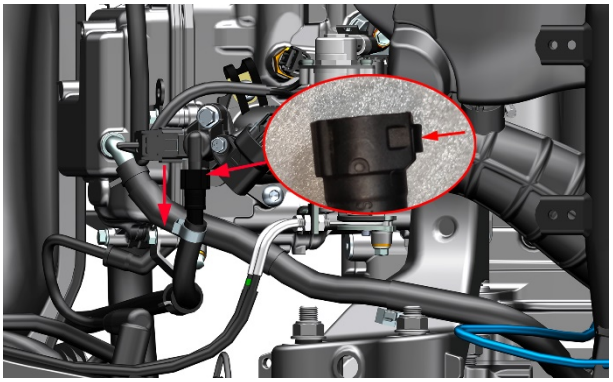

e.After replacing the high-pressure oil pipe with a new one, follow the disassembly steps to restore.

3.Fuel pump

3.1 Fuel pressure is measured using an oil pressure gauge

Follow the above steps to pull out the high-pressure oil pipe at the fuel injector. Connect the high-pressure oil pipe of the original motorcycle to the pressure gauge, and find another high-pressure oil pipe to connect the pressure gauge and the fuel injector.

Start the motorcycle and let the engine idle and measure the fuel pressure.

The standard pressure is: 350±10kPa (3.57±0.1 Kgf/cm2, 50.8±1.45 psi). Check valve performance: holding pressure for 1 minute, the pressure should be ≥ 300kPa (3.06 Kgf/cm2, 43.5 psi).

3.2 simple test Fuel pump

If specialized equipment is not available, a simple test can be performed.

With the engine off, unlock the vehicle and turn the ignition switch to the "off" position without starting the engine. You should be able to hear the fuel pump working. Alternatively, press the high-pressure fuel line at the bottom with your hand to feel significant pressure. Be cautious to avoid the muffler area to prevent burns. If the engine is running, turn off the vehicle's power for more than 10 seconds and then perform the above steps for the inspection.

4.Abnormal fuel pressure disposal

If the fuel pressure is higher than the standard value, the fuel pump needs to be replaced. If it is below the standard Values need to be checked for the following:

a.Whether the fuel line is leaking;

b.Whether the snorkel pipe of the fuel tank is blocked or excessively bent;

c.Whether the fuel pump filter screen is blocked;

d.Whether the fuel pump is faulty;

e.Whether the fuel is insufficient.

⚠WARNING

●When pulling out the executive tubing, pay attention to pulling it in the direction of the axis, and do not press or push or pull the protruding part of the fuel pump and nozzle retainer.

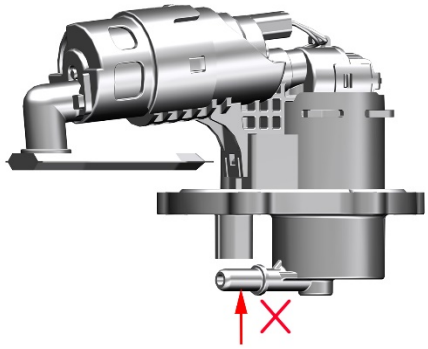

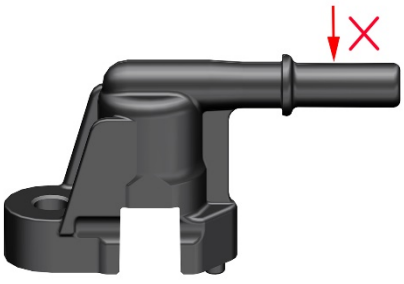

●All actions that may cause a fire, such as smoking, dialing and dialing mobile phones, are prohibited at the demolition site.

●The fuel pump is a precision component, which needs to be assembled in a dust-free workshop and requires strict testing, so it is forbidden to disassemble it by yourself.

⚠CAUTION

●After reinstalling the battery, the EFI system needs to be reset. For specific operation, please refer to the precautions in the driver's manual or the throttle valve body section of this manual.

Radiator

CAUTION

●The motorcycle must be parked on a level, stable ground or lifting platform.

●Operation is required to wait for the engine and muffler to cool down.

●Swallowing or inhaling coolant can be harmful to the human body.

CAUTION

●Regularly check the coolant level, ensuring it is always above the "L" line.

●It is recommended to replace the coolant every 4 years or 40,000 kilometers (24,855 miles).

●Swallowing or inhaling coolant can be harmful to the body. After adding coolant, thoroughly wash any exposed skin, such as hands and face. If swallowed, immediately contact a poison control center or hospital. If inhaled, move to an area with good ventilation. If the coolant accidentally splashes into the eyes, rinse immediately with plenty of water and seek medical attention promptly. Keep coolant away from children and pets.

●Always use coolant suitable for aluminum radiators, based on ethylene glycol. The coolant should be a mixture of coolant concentrate and distilled water in a specific ratio. Only distilled water should be added if dilution is needed; other types of water could corrode the engine cooling system or cause more severe damage.

●Choose the appropriate antifreeze based on the lowest possible temperature in your area. The factory-installed coolant in this vehicle is Total -35°C (-31°F) green antifreeze. The total coolant volume is 1.44 liters (1.52 US qt, 1.27 Imp qt, 0.38 US gal, 0.32 Imp gal).

●Coolant may damage the paint surface. Be careful when adding it. Any small spills should be immediately wiped off with a clean, soft cloth.

1.Check the coolant

a.Straighten the motorcycle through the gap in the right rear and use a flashlight to check that the coolant level is between "H" and "L". Take care that the ground is as level as possible and do not inspect on slopes. And the engine needs to be in a cold state.



2.Addition of coolant (antifreeze) to the auxiliary tank

If the water level of the auxiliary tank is lower than the "L" line, an appropriate amount of coolant needs to be replenished. If there is no coolant in the auxiliary water tank, it is necessary to check whether the cooling system has leakage first, and it must be repaired before it can be replenished.

Lift the rubber cover of the sub-tank and add the right amount of coolant to it with the help of the funnel. Straighten the motorcycle with the help of a flashlight to observe whether the liquid level of the sub water tank is between "H" and "L". Take care that the ground is as level as possible and do not inspect on slopes. And the engine needs to be in a cold state.

3.Coolant is added to the main water tank

a.Turn the direction to the left and all the way down. Remove the two bolts (1) with a T25 Torx wrench, pull out the water tank nozzle, and unscrew the cover of the water nozzle counterclockwise to add coolant.



b.Remove the storage box according to the steps for removing the throttle body. Use a 10# sleeve to loosen the M6×12 deflation bolt (2) of the thermostat counterclockwise for 4~5 turns, and do not remove it completely. Note that a small container is used to absorb the coolant that has spilled from the exhaust bolts. Do not allow coolant to drip directly onto the surface of the part. The O-ring at the vent bolt is ϕ5.6×ϕ1.

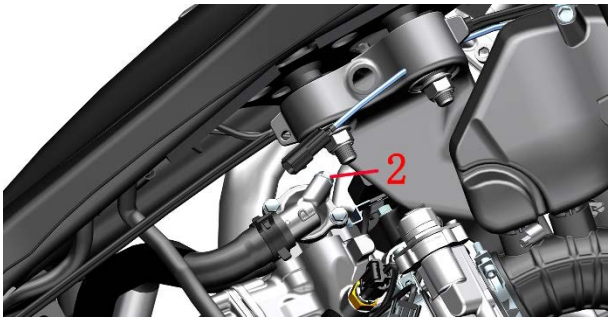

c.Wear waterproof gloves and use the extended funnel to add coolant to the main tank inlet. The coolant level is visible at the water inlet until the coolant is spilled at the stable position of the thermostat bleed bolt.

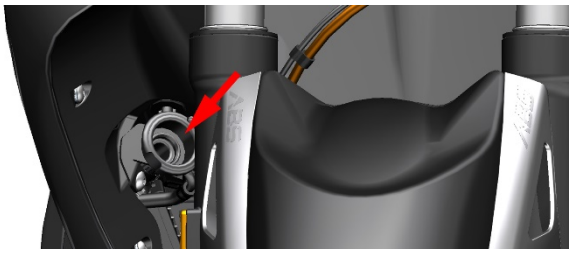

d.Tighten the main tank nozzle cap. Tighten the exhaust bolt (2); Torque: 8~10N.m (0.8~1 kgf.m, 6~7 lbf.ft).

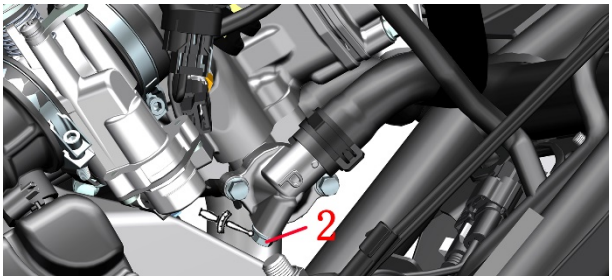

4.Drain the coolant

a.Place the oil tray at the bottom, wear waterproof gloves and remove the M6×12 drain bolt (3) and the O ring (4) of ϕ5.6×ϕ1 with a 10# sleeve.

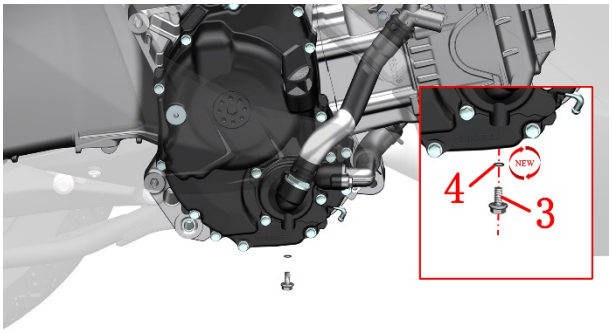

b.Remove the main tank fill cap to accelerate the coolant outflow.

c.Wipe all the joint surfaces clean with a non-woven fabric, check whether the joint surfaces of the bolt (3) are scratched, and replace them with new ones if so. The O-ring (4) needs to be replaced with each disassembly.

d.Put the new O-ring (4) into the bolt (3) first, taking care not to scratch the O-ring. Torque of bolt (3): 8~10N.m (0.8~1 kgf.m, 6~7 lbf.ft).

5.Check if the fins of the radiator tank are deformed or if the air ducts are blocked

a.Use compressed air or low-pressure water guns, brushes, etc. to remove mud, sand, insects and other dirt on the surface of the radiator. When using compressed air, be careful not to get too close to the fins. It is forbidden to directly flush the radiator with a high-pressure water gun, so as to avoid the deformation of the fins and the blockage of the air duct.

6.Check all water pipes for leakage and aging

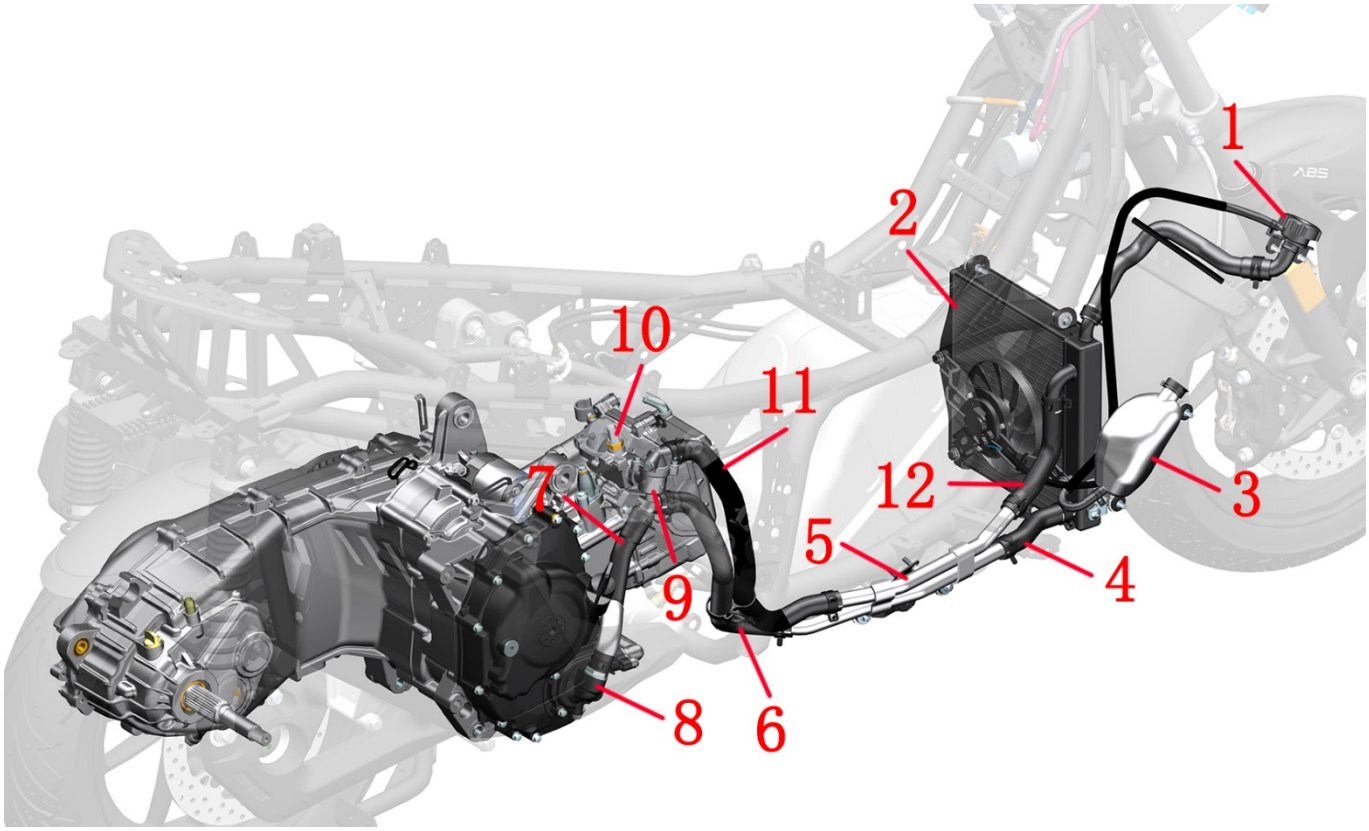

1-Main tank filler 2-Main water tank 3-Auxiliary tank 4-Main tank outlet pipe 5-Aluminum water pipes 6-Engine water pipes 7-The water pump covers the inlet pipe 8-Water pump cover assembly 9-Thermostat assembly10-Water and oil share sensors 11-Thermostat outlet pipe 12-Main tank inlet pipe

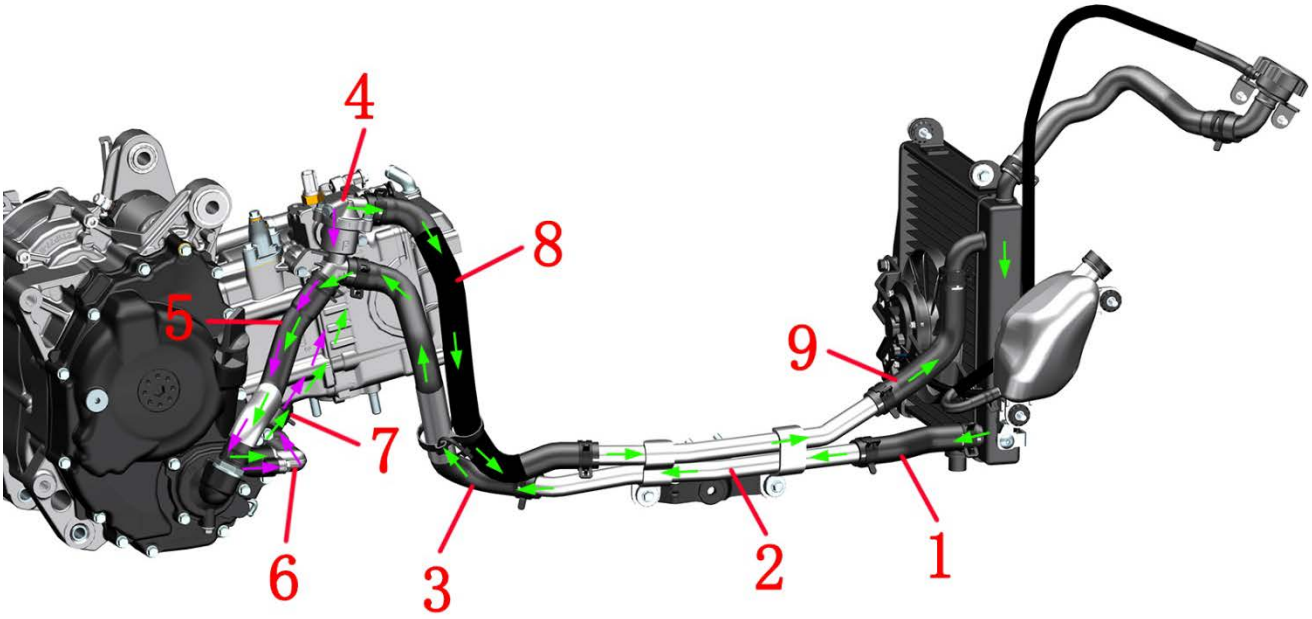

1-Main tank outlet pipe 2-Aluminum water pipes 3-Engine water pipes 4-Thermostats 5-The water pump covers the inlet pipe 6-Water pump cover outlet pipe joint 7-The water pump covers the outlet pipe 8-Thermostat outlet pipe 9-Main tank inlet pipe

Brake hoses

Note:

●This inspection should be handed over to a qualified maintenance unit to complete.

●Inspect the brake hose regularly according to the maintenance schedule.

●It is recommended to replace the brake hoses every 4 years.

Refer to steps 1 and 2 in the brake system inspection procedure. You can use an endoscope with LED lights to facilitate the inspection of the ABS hydraulic unit and master cylinder hose connections, or remove the relevant covers for inspection.

Brake fluid

Note:

●This inspection should be completed by a qualified maintenance organization.

●It is strictly forbidden to directly flush the main pump with high-pressure water.

●After disassembly, make sure that all parts are installed correctly.

●It is strictly forbidden to mix in water, dust, impurities and silicic acid or petroleum-based liquids, otherwise it will cause serious damage to the brake system.

●This vehicle uses DOT 4 brake fluid, and it is forbidden to mix it with other brake fluids.

●Wear protective gloves/protective clothing/protective goggles/protective masks.

●Brake fluid must be used in time after opening, seal and moisture-proof measures must be taken when storing; it is recommended not to exceed 1 month. Inferior or damp brake fluid will cause adverse effects on the brake system, and may cause brake failure when the impact is severe.

●The brake fluid should be prevented from dripping on the paint surface of the cover or the surface of the parts. If it is accidentally splashed, it should be rinsed with water immediately.

⚠ DANGER

●If brake fluid is swallowed, contact a poison control center or hospital immediately; In case of accidental contact with eyes, rinse with water and seek medical attention immediately.

●Keep brake fluid away from children and pets.

●The motorcycle must be parked on a level, stable ground or lifting platform.

1.Add brake fluid to the main cylinder of the front and rear disc brakes

a.Use the front brake master cylinder as an example to explain the procedure. The steps for adding fluid to the rear brake master cylinder are the same.

b.Place the vehicle on a level surface.

c.As shown in the diagram, wrap the area around the master cylinder with oil-resistant plastic film to prevent brake fluid from dripping onto parts and damaging the paint.



d.After wearing waterproof gloves, remove the bolt (1) with a Phillips screwdriver, and remove the upper cover (2), cover plate (3), and sealant gasket (4).

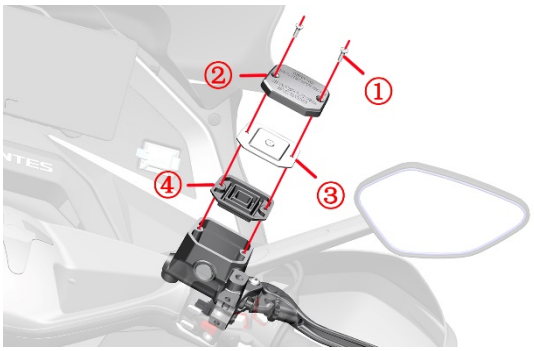

e.Use a brake fluid moisture tester to measure the moisture content. If it is >2%, replace all the brake fluid. If it is ≤2%, add new, unopened DOT 4 brake fluid to the front brake master cylinder, filling up to 3/4 of the transparent observation window. It is recommended that the moisture content be lower than 1.5%. The vehicle is factory-filled with TOTAL HBF 4 (DOT 4) brake fluid.



The picture above shows the brake fluid moisture content tester, the picture comes from the Internet, and the copyright belongs to the author of the original picture. Do not use for any other purpose.

f.Clean up the foreign matter before reassembling.

2.Change the brake fluid

Follow the steps on the previous page to add brake fluid, and if the measured water content is > 2%, the brake fluid needs to be replaced. This test should be done every 4000 km (2485 miles) or every 15 months. It is recommended to change the brake fluid every 2 years. If the brake fluid is not replaced for a long time, it will form flocculent materials to block the oil pipe, the oil hole of the disc brake main cylinder or the piston to

stagnate, resulting in poor braking effect or failure, and then affecting driving safety.

2.1 Change the front brake fluid

a.Wrap the area around the front brake main pump with oil-resistant plastic film, as shown in the previous section.

b.Pull out the rubber cap (1) of the deflating nozzle and put on the 8# plum wrench. Slip a 6mm (0.23 in) hose into the vent nozzle (2), being careful not to remove the torx wrench.

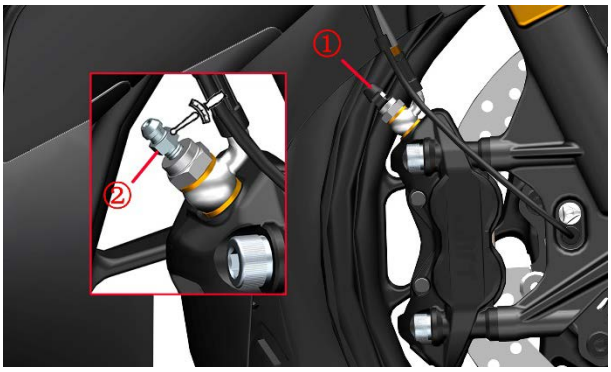

c.Place the other end of the hose in the oil can.

d.Follow the steps on the previous page to add brake fluid to remove the front brake main cylinder cover.

e.Turn the 8# Torx wrench counterclockwise with your right hand to release the air vent, and pinch the front brake handle with your left hand slowly and at a constant speed to the end and keep it still. Lock the deflation valve clockwise and slowly release the handle. Pay close attention to the fluid level of the front brake main cylinder, and add it in time when it is too low to avoid air bubbles entering the brake hose. Repeat the previous steps until clear, clean, light yellow brake fluid comes out.



f.Observe whether the liquid level of the main pump is at 3/4 of the transparent inspection place, if not, it needs to be added or pumped out or discharged with a syringe.

g.Unplug the 6mm (0.23 in) hose after the brake fluid is replaced; Use a torque wrench to tighten the bleed nozzle to the standard torque: 10 N.m (1 kgf.m, 7 lbf.ft). After that, the rubber cap is back to the venting nozzle.

h.Replace the main pump cap.

i.Repeat the pinch and pinch of the brake handle to check whether the brake returns to normal hydraulic resistance.

⚠WARNING

●The discharged brake fluid should be properly disposed of and no further use should be prohibited. It is forbidden to pollute the environment by dumping at will; or feel free to place, etc. It should be handed over to a qualified recycling unit for proper disposal.

●The steps to drain the brake fluid must be strictly implemented and must not be disordered; Avoid air bubbles from entering the brake line.

●Pinch the brake lever at a slow and uniform speed to avoid air bubbles entering the brake line.

●The deflation nozzle must be locked in place before the brake handle can be released, and semi-locking is prohibited; And don't overexert yourself.

2.2 Replace the rear brake fluid

Replace the rear brake fluid by following the steps for changing the front brake fluid.

3.Brake System Bleeding

If the brake lever feels soft when squeezed and braking performance significantly decreases, first check if the master cylinder fluid level is below the "LOW" line and whether there are any leaks in the braking system. If these two issues are ruled out and the problem persists, you can attempt the bleeding procedure. The bleeding process is similar to the brake fluid replacement procedure. During fluid replacement, clean, transparent, light yellow brake fluid should flow out steadily. During bleeding, foam-like brake fluid will flow out.

After completing the bleeding procedure, check that the master cylinder fluid level is within the standard range.

⚠WARNING

●The discharged brake fluid should be properly disposed of and no further use should be prohibited. It is forbidden to pollute the environment by dumping at will; or feel free to place, etc. It should be handed over to a qualified recycling unit for proper disposal.

●During operation, it is necessary to pay close attention to the liquid level height in the main pump, and it is necessary to replenish it in time to avoid air entering the brake hose.

Tyre

⚠DANGER

●Before riding, always check the condition and tire pressure of the tires.

●Replace the tire immediately if it is worn to the limit or has

cracks, cuts, or other damage.

●When using new tires, exercise extra caution while driving. Unbroken-in new tires may slip, leading to loss of control of the vehicle.

●During the first 150 kilometers (93 miles) after replacing tires, avoid rapid acceleration, sharp turns, and emergency braking.

●The standard front tire size for this vehicle is 120/70-15, and the rear tire size is 140/70-14. When replacing tires, ensure to use tires of the standard specification. Using non-standard tires could cause issues.

●It is not recommended to use external patches for tire repairs; the tire should be removed and repaired from the inside. External patches can be used as a temporary emergency solution, but reduce speed and visit a service provider for internal repairs as soon as possible. If the tire sidewall is damaged, punctured, scratched, or if there are large holes in the tread, the tire should be replaced immediately. After a tire repair, dynamic balancing should be redone.

WARNING

●Regularly check tire pressure. Under normal temperature conditions, the standard pressure is 240 kPa (2.5 kgf/cm², 35 PSI) for the front tire and 260 kPa (2.7 kgf/cm², 37.7 PSI) for the rear tire. The maximum cold tire pressure should not exceed 300 kPa (3.1 kgf/cm², 44 PSI).

●If a decrease in tire pressure is noticed, check if the tire has nails, small holes, or if the rim has been damaged or deformed, causing cracks.

●When using a tire changer to remove the tire, avoid the valve stem position. Be careful to protect the area where the rim and tire bead make contact, as scratches may cause air leakage.

●Overinflated tires reduce the contact area with the ground, making it easier to slip and causing loss of control. In summer, they are also more likely to burst. Underinflated tires lead to difficult steering, increased wear, engine load, and higher fuel consumption.

●Prolonged exposure to sunlight can cause tires to crack and age. It is recommended to park the vehicle in a dust-free, sun-protected, and well-ventilated area, or use a motorcycle cover to protect both the vehicle parts and the tires. If the vehicle is not used for an extended period, stabilize the vehicle on a stand and lift the tires off the ground to prevent deformation from prolonged contact with the surface.

●Tire sealant can clog the air holes of the tire pressure monitoring sensor, making inflation difficult or causing the tire pressure monitoring system to fail. Therefore, it should not be used.

1.Check the tires

a.Park the motorcycle on a flat, stable ground or lift platform and lower the main bracket.



b.Support the front wheels with suitable tools, let the front tires hang in the air, and then turn the tires to carefully check for abnormalities, such as eccentric wear, nails, cracks, etc. Clean up small stones or other foreign objects embedded in the tread. Check whether the tread and sidewall have been worn to the mark, if it is close to or has been worn to the mark, it should be replaced with a new tire of the same specification in time. Use the tire pressure gauge to measure the tire pressure when the tire is cold, and replenish or deflate to the standard value.

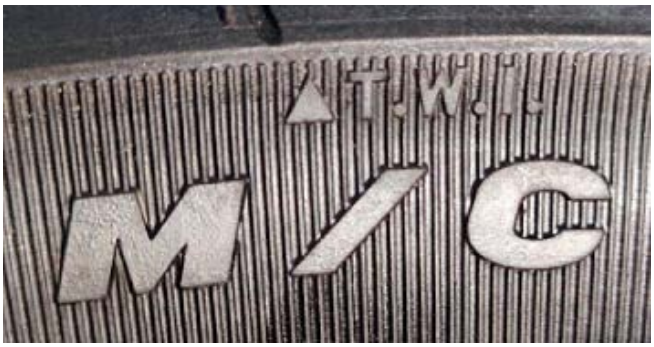

The tread bulge has a wear mark height of 1.6 mm (0.06 in). The sidewall triangle (△T.W.I.) markings indicate the position of the wear strips. If it is worn to the marked point, it means that it has been worn to the limit, and it will be a safety hazard to continue driving, and it must be replaced with new tires of the same specification.

c.The rear tire inspection is consistent with the front tire and will not be repeated here.

2.Replace the tires

a.Replace the front tire

The front wheel assembly can be removed by referring to the step-by-step description of removing the front wheel assembly in this manual "Front Fork Assembly". Use a tire scraper to remove the tire, pay attention to avoid the valve position when disassembling, and never use a crowbar to pry the tire at the valve position to avoid damaging the tire pressure sensor. Before press-fitting the tire, it should be installed according to the direction of rotation indicated on the sidewall, and the yellow marked tap should be aligned with the valve position. After replacing the new tires or repairing the tires, you need to rebalance the dynamic to avoid the front wheel shaking caused by imbalance affecting the driving experience.





b.Replace the rear tire

Remove the rear wheel assembly by replacing the rear brake disc from the front. Other operations are similar to changing the front tire and will not be repeated here. Click on the arrow to see the steps to replace the rear brake disc.

Forks

Note:

●Every 8000km (4971 miles), the fork should be checked for leakage or deformation and bending, and whether the shock absorption rebound is normal.。

●Before each ride, check whether the front shock absorber is leaking and whether the fasteners are loose to ensure driving safety.

●Bolt torque at the hollow shaft of the front wheel of the shock absorber bottom barrel: 20 N.m (2.0 kgf.m, 15 lbf.ft).

●To replace the hydraulic oil, all parts should be thoroughly cleaned with kerosene or diesel, and 497±5ml (16.8±0.17 US oz, 17.5±0.18 lmp oz, 30.3±0.3 cu-in) 10W hydraulic oil should be poured at one time to avoid mixing different hydraulic oils.

●After passing through dusty or muddy roads, the foreign objects on the fork pipe (exposed chrome plated section cylinder) should be cleaned out in time to avoid leakage caused by scratching the dust seal or oil seal; Can be wiped clean with a soft cloth.

●Do not use a high-pressure water gun to rinse directly against the dust seal at close range.

●If the motorcycle is not driven for a long time, it should be parked in a ventilated and dry environment, as the dark and humid environment can easily lead to rust of the fork pipe and rust other parts of the vehicle. Coastal areas should be dampened more frequently before maintenance than inland areas. After wiping it clean, you can spray a small amount of anti-rust oil to prevent rust.

1.Check the appearance

a.After the motorcycle is parked firmly, let the front wheels hang in the air, and rotate the direction to observe whether there is leakage in the front shock absorption; Whether there are scratches, pits, rust on the surface of the fork tube, etc. Shallow scratches, small pits, and slight rust can be smoothed with fine sandpaper of about 2000 mesh. Wipe off dust or foreign objects from the dust seal.

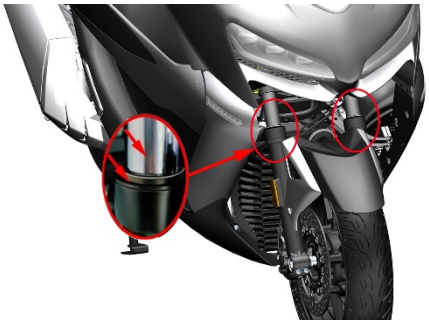

b.Check whether the bottom cylinder is peeling off the paint; Signs of whether the mounting points of the front fenders, front wheel hollow shaft and front brake calipers are broken or cracked. Check the bottom of the bottom barrel for leaks.

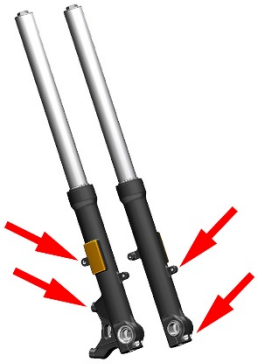

c.If a large amount of hydraulic oil is attached to the fork tube, wipe it clean before riding observation. If there is no oil stain or slight oil stain, it is the hydraulic oil accumulated during the assembly of the dust seal, and it can be judged that the oil seal is not leaking. If a small amount of oil stains or sludge mixture is attached, wipe the surface of the fork tube and oil seal after removing the dust seal, compress it once, absorb the shock before wiping it clean, and then press it; Repeat 10 times. Observe whether there is still on the fork tube, if there is, the front shock absorber oil leakage needs to replace the dust seal and oil seal, if not, a small amount of hydraulic oil accumulated during assembly is normal.

d.Check whether there is leakage at the bottom of the bottom cylinder with the help of a mirror or mobile phone lens, if there is a slight leakage, check whether the bolt is loose, where the bolt torque is 20~26N.m (2~2.7 kgf.m, 15~19 lbf.ft). If there is still leakage after tightening, the gasket should be replaced.



2.Check the shock absorption performance

Pinch the front brake handle and press down hard in the direction of the handle, after letting go, it should be able to compress smoothly and then return to normal, repeat the operation several times to check. If there is blockage, it is necessary to remove the shock absorber for investigation. If there is a collision with the front wheel or a high-speed hurdle, the shock absorption should be checked for deformation. Check the damping performance according to the maintenance periodic table. It is necessary to prevent the motorcycle from rolling over during operation.

3.Shock absorber before disassembly

Remove the front shock by referring to the steps for removing the front shock absorber in this manual "Fork Assembly".

4.Straighten the fork tubes

If the front wheels of the motorcycle cross the hurdle at high speed or after the impact, check whether the fork pipe is deformed. Take the left shock absorption as an example, use the end face of the front axle of the shock absorbing bottom cylinder and the end face of the front fender installation point to fix the shock absorption; Or remove the fork tube. Use the dial gauge to detect the deformation of the fork tube in the axial direction, and turn the fork tube to measure different positions.

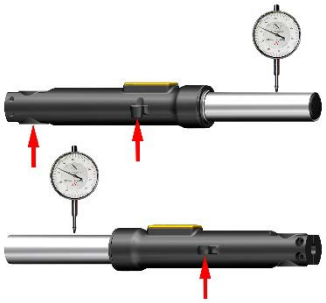

The slight deformation of the deformation < 0.2mm (0.008 in) can be supported by a V-shaped iron block to support the fork tube and place soft rubber or rubber, copper sheet, etc. on the contact surface to prevent the fork tube from scratching, use the press slowly, small pressure and small stroke to straighten it many times, and measure while straightening, and the radial runout should be < 0.05mm (0.002 in) after correction. If the original bending deformation part is out of circle after correction, it should be replaced. If the deformation is too large, the shock absorber should be replaced.

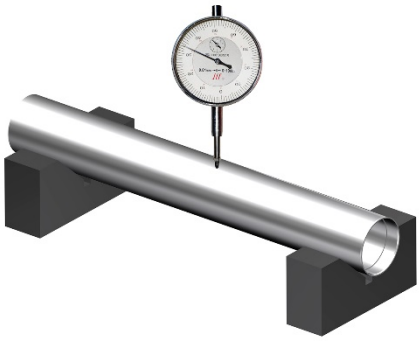

5.Troubleshooting

a.If there is a noticeable impact sound while riding on uneven roads or during emergency braking, the following items should be checked:

Whether the shock absorber spring is broken or has lost its tension.

Whether the hydraulic oil level is too low or contains air.

Whether there is too much hydraulic oil.

Whether the spring is axially bent and rubbing against the fork tube.

b.If the suspension feels too stiff, check the following:

Whether there is too much hydraulic oil.

Whether the fork tube is bent or deformed.

Whether the spring has been modified.

c.If the suspension feels too soft, check the following:

Whether low-viscosity hydraulic oil has been used.

Whether the spring tension has decreased.

Whether there is too little hydraulic oil.

Side brackets

Note

●Park the motorcycle on a flat, stable ground or lift platform and lower the main bracket.

●When disassembling and installing the spring, it is necessary to prevent the spring from suddenly flying off and causing personal injury.

1.Examine

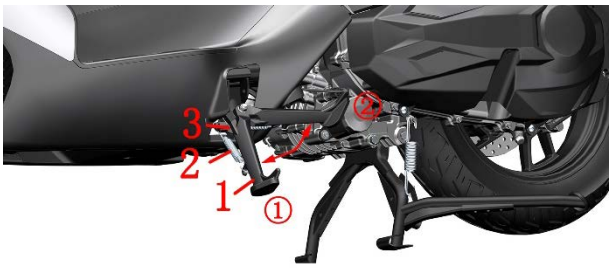

1.Side bracket 2.Side bracket spring

3.Side bracket power out switch

①the parking position ②the driving position

a.Check whether the side bracket springs are damaged and whether the elastic force is normal.

b.Check that the side bracket is rotating properly. Turn to the angle of Figure 1 should be able to automatically turn to the parking space under the spring elastic force; At the angle of Figure 2, it can automatically turn to the parking space. If necessary, the side brackets can be removed for lubrication.

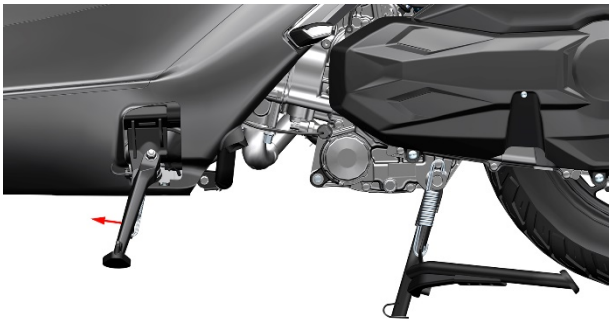

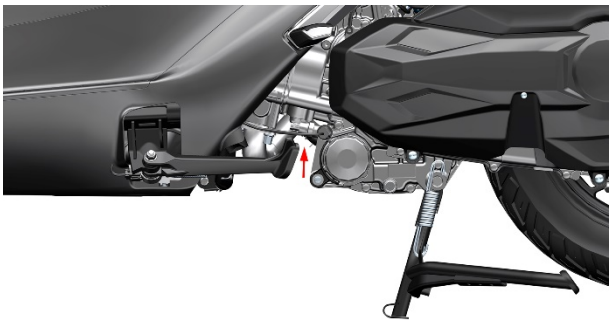

c.Check if the engine kill switch functions properly.

When the side stand (parking position) is lowered, the vehicle should not be able to start. When the side stand (riding position) is raised, and neither the front nor rear brake lever is engaged, the vehicle should not be able to start. After the vehicle is started, lowering the side stand should automatically cut off the engine. If this does not happen, check the kill switch

or brake switch for malfunction.

d.Check the side bracket mounting plate for deformation or cracking.

2.lubrication

a.Retract the side brackets so that the springs are in the shortest position for easy removal.

b.The thick steel wire can be rolled into a circle and sleeved into the spring (1) hook, and attention should be paid to ensure that the steel wire cannot be loosened or spread out during the pulling process.

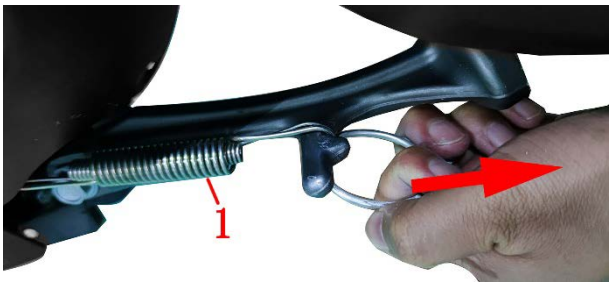

c.First, remove the side bracket spring with a hook or rope, remove the bolt (2) on the inside of the side bracket counterclockwise with an 8# sleeve, and remove the copper gasket (3) and the side bracket flame-out switch. Remove the nut (8) with a 14# socket or torx wrench, then remove the bolt (5) with a 14# socket or torx wrench, take out the bushing (6), and finally remove the side bracket (7).

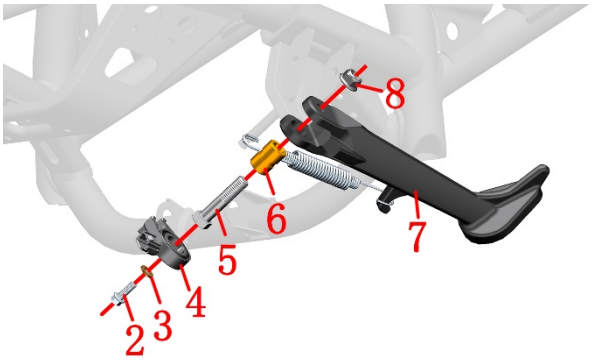

Main bracket

Note

●Park the motorcycle on a flat, stable ground or lift platform with the side brackets down.

●When disassembling and installing the spring, it is necessary to prevent the spring from suddenly flying off and causing personal injury.

1.Examine

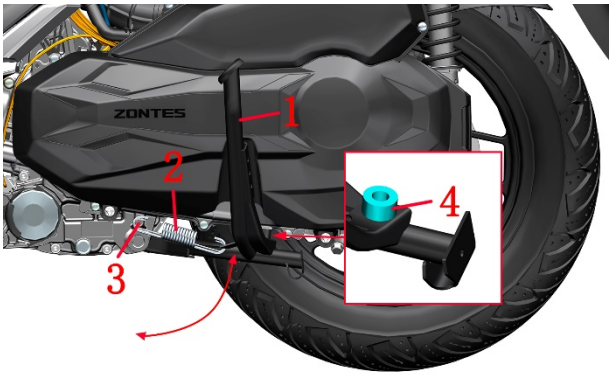

1.Main bracket 2.Main bracket spring 3.Main bracket return spring column 4.Buffer glue

a.Straighten the vehicle， Pedal the main bracket labor-saving bar with your foot and check whether the spring elasticity is normal. The main bracket should be able to quickly return to the driving position under the action of the spring's own elastic force.

b.Check whether the buffer adhesive is aging and failing.

c.Check whether the return spring column of the main bracket is deformed.

d.Check whether the main bracket is obviously deformed and whether the welding part is cracked.

2.lubrication

a.The main bracket is kept in the stowed position, and the circlip (1) is removed using pliers on the right side and the spacer (2) is removed. Knock out the main bracket shaft (3) from right to left, and pay attention to the protective measures at the spring of the main bracket to prevent the spring of the main bracket from suddenly loosening and flying out and causing personal injury. It can be covered with a hard object, or the spring can be tied with a rope or a thin wire.

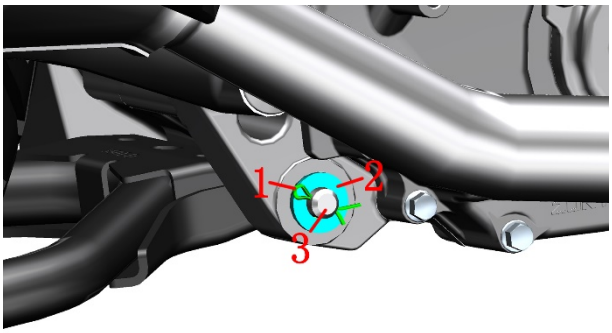

b.Remove the spring from the main bracket.

c.Apply an appropriate amount of grease to the end face of the engine case bushing, the inner bore and the surface of the main bracket shaft.

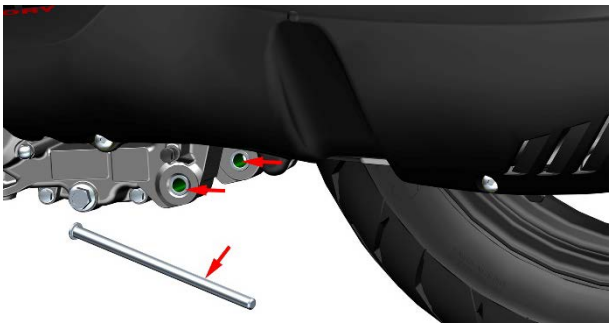

3.Install the main bracket

After aligning the main bracket with the mounting holes, insert the main bracket shaft from the left side. After inserting the spacer, insert the cotter pin, and bend the two feet of the patter pin to both sides to prevent it from falling off.

Hang the main bracket spring (1) to the main bracket first, and then use a Phillips screwdriver to hang the spring (1) on the main bracket return spring post.

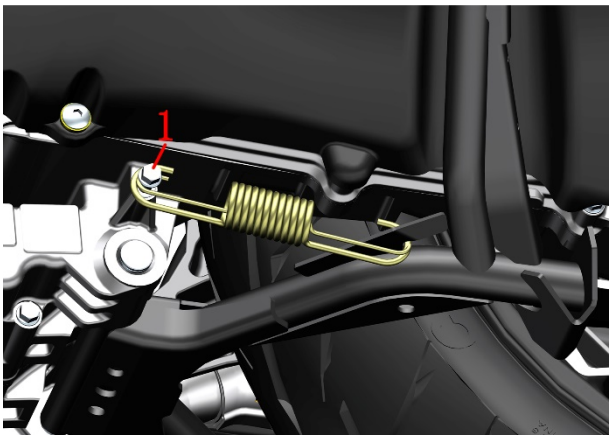

4.Replace the main bracket return spring post

After removing the main bracket according to the previous steps, remove the main bracket counterclockwise with an 8# sleeve to reset the spring column. It is recommended to apply an appropriate amount of thread fastening glue before assembly. Torque: 12 N.m (1.2 kgf.m, 9 lbf.ft).

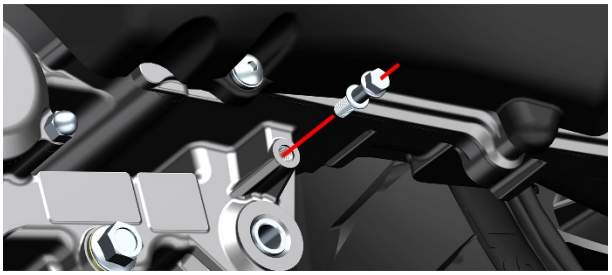

3.EFI system

Know Before Service

1.The structure and working principle of the EFI system are complex, and it is necessary to have a certain understanding of the working principle and structural characteristics of each EFI system before checking and troubleshooting. The content of this chapter requires certain maintenance experience, and it is recommended to go to a maintenance unit with maintenance qualifications for inspection or maintenance.

2.Please keep the fuel in the fuel tank not less than 3L (3.17 US qt, 2.64 lmp qt, 0.79 US gal, 0.66 lmp gal), otherwise it will affect the normal operation of the EFI system, please refill the fuel as soon as possible when measuring 1 bar or less than 1 bar.

3.If the motorcycle is parked for more than 3 hours, the motorcycle should be energized and the flame-off switch should be turned on before the initial start"↻"Wait for the fuel pump to finish pressurizing the fuel before starting the vehicle.

4.If the start fails many times, the cylinder may have been flooded, and you need to tighten the throttle to the end and press the start button for 3 seconds to perform the cylinder cleaning procedure.

5.If the battery low voltage prompt symbol flashes, the battery should be charged in time; Too low a voltage may cause the EFI parts to not work properly, fail to start or have difficulty starting, lack of power, etc.

6.When the battery is reinstalled, the power is suddenly cut off during driving, the idle speed is abnormal, and the insurance is replugged and unplugged. Here's how:

a.Unlock the motorcycle and prop up the main bracket；

b.Pinch the brakes and start the vehicle；

c.Pull the engine speed above 3000 rpm；

d.After releasing the accelerator, turn off the kill switch and lock the motorcycle；

e.Wait for 5 seconds and unlock the motorcycle again to complete the EFI system reset.

7.Pay attention when checking or troubleshooting the EFI system：

a.After powering on, the parts connected to the 12V power supply should not be dismantled at will, so as to avoid the coil in the appliance from self-induction and instantaneous voltage damage to the ECU or sensor.

b. In the event of a failure, it should not be blindly dismantled and inspected. The mechanical part should be confirmed to be normal before checking the electronic control part。

c.In fault diagnosis, the diagnostic instrument is preferentially used to read the fault code or determine the fault code according to the flashing frequency of the fault indicator, and conduct targeted inspections.

d.Pay attention to check whether the EFI parts are oxidized and whether the connection is reliable.

Tool:

MST-500P diagnostic instrument	PT300 Electrojet Brush Writing Diagnostic Instrument (16PIN)	multimeter
		

●Both of the above diagnostic instruments can read fault codes; The PT300 diagnostic device can be flashed into the program.

8.Each motorcycle has different driving conditions and maintenance conditions, so it is not possible to list all the fault phenomena and troubleshooting procedures. Only some of the more common faults can be listed. Maintenance personnel themselves also need to have a certain amount of professional knowledge and experience accumulation process.

9.If there is a "📖" symbol on the right side of the step, you can click to quickly jump to the corresponding step.

⚠WARNING

●For new motorcycles or vehicles that are about to run out of fuel, never turn on the kill switch. Be sure to fill up with enough fuel before turning it on, otherwise the fuel pump will dry without oil and cause damage.

●Do not plug and unplug the plugs of each part at will, and do not directly clean the plug with water. Always check that it is properly plugged back in after plugging and unplugging.

Fault codes

Note:

●The motorcycle is unlocked and the ignition switch is turned on, and the EFI fault light is always on when it is not started, and the motorcycle cannot be started if it is not lit.

●After starting the motorcycle, if the fault light lights up to report the EFI fault, it means that the EFI system is abnormal.

●When the EFI system reports a malfunction, continuing to drive the motorcycle may cause damage. Please contact a qualified maintenance unit or our special maintenance point for investigation in time.

1.Read the fault code through the meter

If the EFI fault indicator light  on the instrument panel is illuminated during engine operation, it indicates a fault with the EFI components that needs to be addressed.

a.Before powering on the vehicle, twist the throttle to the maximum and keep it in the fully open position. Then, turn on the ignition switch and kill switch. The system will detect the fault, and the fault indicator light will start flashing.

b.The fault code consists of 4 digits. Read the fault code by counting the number of flashes. For example: P0201 will flash as follows:

10 consecutive flashes – 1 second pause – 2 consecutive flashes – 1 second pause – 10 consecutive flashes – 1 second pause – 1 consecutive flash.

c.If there is more than one fault, the next fault code will begin flashing after a 4-second pause once the previous fault code has completed. Therefore, if the fault indicator light goes out during the flashing sequence and does not light up again after waiting for more than 5 seconds, it means that all fault codes have been displayed.

d.To observe the fault codes again, turn off the kill switch, then turn it on again while keeping the throttle fully open.

2.Read the fault code through the diagnostic instrument

Power on the vehicle and open the left storage compartment.

Pull out the OBD connector, connect it to the diagnostic tool, and read the fault codes. The OBD connector may come in different colors depending on the batch; it can be either black or white, but they have the same functionality. If the OBD connector has a protective cap, remove it first.

3.Error code

code	illustrate	code	illustrate
P0030	O2 Sensor Heater Contr. Circ.(Bank(1)Sensor 1)open	P0131	O2 Sensor Circuit Low Voltage Bank 1 Sensor 1
P0031	O2 Sensor Heater Contr. Circ.(Bank(1)Sensor 1) Low	P0132	O2 Sensor Circuit High Voltage Bank 1 Sensor 1
P0032	O2 Sensor Heater Contr. Circ.(Bank(1)Sensor 1) High	P0133	The Bank 1 O2 sensor slow response to both rich and lean mixtures
P0036	Rear O2 sensor heater control circuit open	P0134	Bank 1 O2 sensor signal open circuit
P0037	The voltage of the rear O2 sensor heater control circuit low	P0136	Rear O2 sensor signal open circuit
P0038	The voltage of the rear O2 sensor heater control circuit high	P0137	Rear O2 sensor signal wire shorted to ground
P0053	The front O2 sensor heater on Bank 1 has an unreasonable resistance	P0138	The rear O2 sensor signal wire shorted to the power supply
P0054	The rear O2 sensor's heater resistance is unreasonable	P0201	Injector Circuit/Open – Cylinder 1
P0105	Intake pressure sensor 1 signal has no change	P0222	The voltage in the signal circuit of the electronic throttle position sensor 2 low
P0106	Intake pressure sensor over upper limit fault	P0223	The voltage in the signal circuit of the electronic throttle position sensor 2 high
	Intake pressure sensor below lower limit fault	P0261	Cylinder 1 injector control circuit voltage low
P0107	Manifold Absolute Pressure/Barometric Pressure Circuit Low	P0262	Cylinder 2 injector control circuit voltage high
P0108	Manifold Absolute Pressure/Barometric Pressure Circuit High	P0301	Misfire Fault
P0111	Intake Air Temperature Sensor 1 Circuit Range/Performance	P0322	Speed sensor signal lost fault
P0112	Intake Air Temperature Sensor 1 Circuit Low	P0351	Cylinder 1 ignition coil control open circuit
P0113	Intake Air Temperature Sensor 1 Circuit High	P0420	Aging of the O2 storage capacity of the three-way catalytic converter
P0114	Intake air temperature stuck fault	P0444	The charcoal canister control valve open circuit
P0116	Engine coolant temperature exceeds the reasonable threshold limit	P0458	The voltage in the charcoal canister control valve circuit low
P0117	Engine Coolant Temperature Sensor 1 Circuit Low	P0459	The voltage in the charcoal canister control valve circuit high
P0118	Engine Coolant Temperature Sensor 1 Circuit High	P0480	Cooling fan control open circuit
P0119	Engine temperature reasonableness fault	P0501	Vehicle Speed Sensor “A” Range/Performance
P0121	The signal from the electronic throttle position sensor 12 abnormal	P0563	System Voltage High
P0122	The signal circuit voltage of electronic throttle position sensor 1 low	P0571	Brake Switch "A" Circuit
P0123	The signal circuit voltage of electronic throttle position sensor 1 high	P060D	Internal Control Module Accelerator Pedal Position Performance
P0130	O2 Sensor Circuit Bank 1 Sensor 1	P061A	Internal Control Module Torque Performance

P061C	Internal Control Module Engine RPM Performance	P1565	Throttle mechanical lower stop point malfunctioned again on its own
P0627	Fuel pump relay control circuit malfunction	P1568	Return spring check for major faults
P0628	Fuel pump relay control circuit malfunction	P1573	Monitoring error response failure
P0629	The oil pump relay control circuit voltage high	P1574	Errorpin is activated and monitoring communication is normal
P0651	The 5V power supply module 2 has malfunctioned	P1579	The electronic throttle self-learning conditions are not met
P0691	Fan control circuit voltage low	P2106	Electronic throttle drive stage fault (short circuit)
P0692	Fan control circuit voltage high		Electronic throttle drive stage failure (overheating or overcurrent)
P06B8	Error occurred while reading NVM block		Electronic throttle drive stage fault (unreasonable)
	Error occurred while writing NVM block		Electronic throttle control drive stage fault (open circuit)
P1527	Function Monitoring: Monitoring of ICO From Level1	P2122	The signal voltage of electronic throttle pedal position sensor 1 low
P1528	Function Monitoring: Monitoring of ICO From Level2	P2123	The signal voltage of electronic throttle pedal position sensor 1 high
P1530	AD converter zero test monitoring failure	P2127	The signal voltage of electronic throttle pedal position sensor 2 low
	Causing an electronic control unit (ECU) failure that leads to irreversible cut-off of fuel injection (ICO).	P2128	The signal voltage of electronic throttle pedal position sensor 2 high
P1531	AD converter given voltage test monitoring failure	P2138	Throttle/Pedal Position Sensor/Switch “D”/“E” Voltage Correlation
P1545	DVE position deviation fault	P2232	The signal wire of the rear O2 sensor is coupled to the heating wire
	Throttle body PID adjustment maximum fault	P2270	Bank 1 rear O2 sensor aging - signal consistently rich
	Throttle body PID adjustment minimum fault	P2271	Bank 1 rear O2 sensor aging - signal consistently too lean
P1559	Throttle valve limp mode position self-learning fault	P2300	Cylinder 1 ignition coil control circuit voltage low
	Electronic throttle lower limit position initialization self-learning fault	P2301	Cylinder 1 ignition coil control circuit voltage high
P1564	The system voltage does not meet the self-learning conditions of the electronic throttle.	U0073	CAN1 Busoff Fault

4.Clear the fault code

When the EFI fault is checked, it needs to be cleared manually or through a diagnostic instrument.

4.1 Manual purge

a.Unlock the vehicle

b.The flame-out switch hits "";

c.Start the motorcycle, refuel in neutral to more than 4000 rpm and hold for 10 seconds;

d.Release the throttle, hit the flame-out switch to "", pay attention to the motorcycle do not power off, and wait for more than 10 seconds

e.After repeating the above three steps for 4 times, the fault light will go out.

4.2 Clear with a diagnostic device

The steps may vary depending on the brand or model, so follow the description in the diagnostic instrument manual to clear the fault code.

CAUTION

●During the operation of the engine, the fault light does not turn on, and the fault light flashes after the ignition is a historical fault, which will not affect the performance and life of the whole motorcycle, and will automatically disappear later.

EFI parts layout

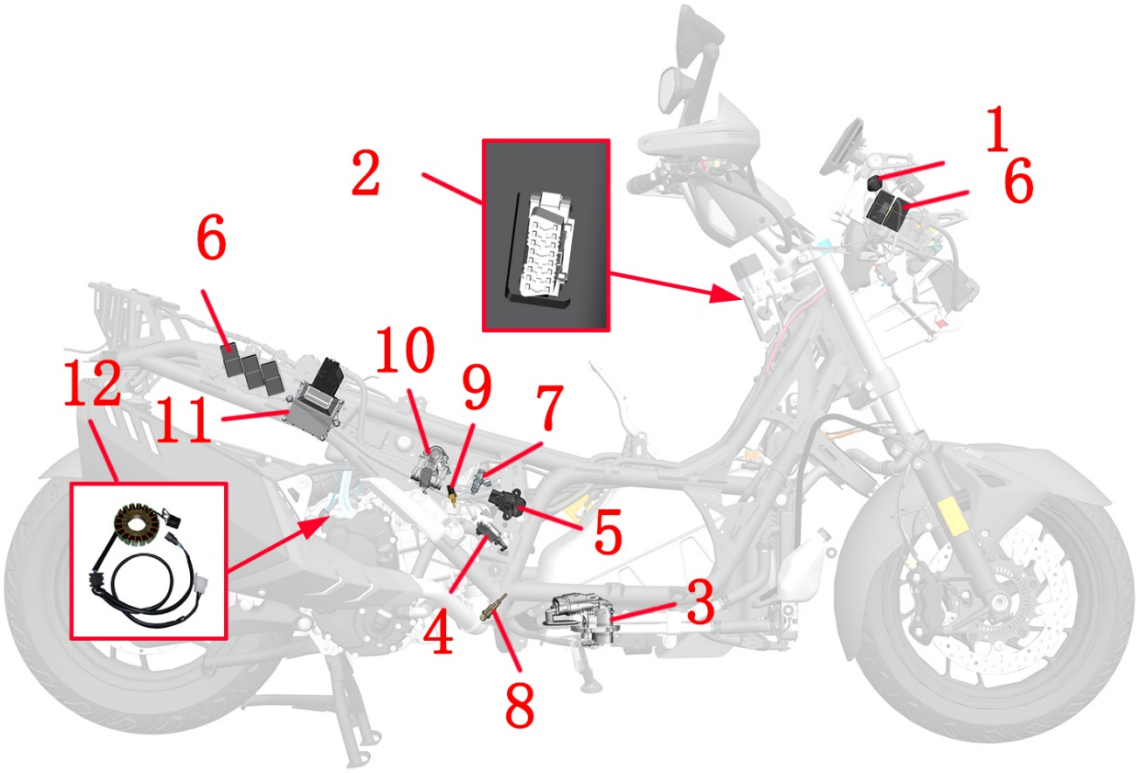

1	2	3	4	5	6
Tilt switch	OBD Diagnostic Interface (Main Cable)	Fuel pump	Canister solenoid valve	Ignition coil	EFI relays
	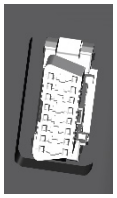				
7	8	9	10	11	12
Injector	Oxygen sensor	Water and oil share sensors	Throttle body	ECU	Crankshaft position sensor
					
*The throttle body assembly consists of (sensor, idle control valve, stepper motor). The crankshaft position sensor is integrated with the magneto stator					

Fault diagnosis and troubleshooting of EFI parts

Note:

●Once the EFI parts are disassembled, the EFI system needs to be reset. For details, see the service information in this section.

●Fuel pumps, three-in-one sensors, stepper motors, ECUs and other precision parts, such as dismantling without permission, may cause damage, and are not within the scope of the three guarantees for human reasons.

●After disassembling the throttle valve body, the air outlet and intake manifold of the air filter should be sealed with a lint-free cloth or masking paper to prevent foreign matter from entering.

1.Tilt switch

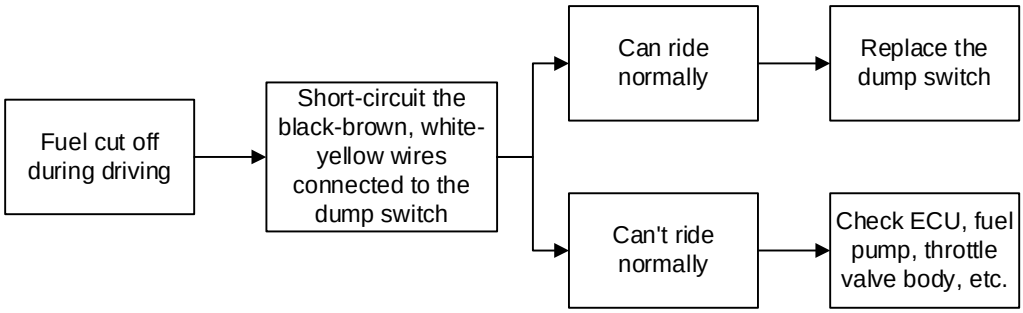

2.OBD interface

The main line cable comes with an OBD interface, and the location is shown in the previous one, and the fault code is read through the diagnostic instrument. The diagnostic instrument can be used to read historical fault codes, current fault codes, clear fault codes, and read the status of the ECU using the diagnostic interface.

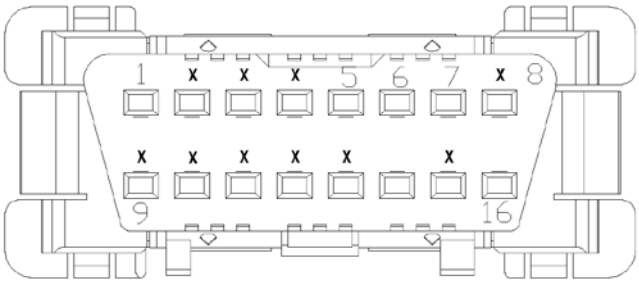

The picture above shows the cable end joint

sort	1	5	6	7	14	16
color	Blue/Yellow	green	Yellow/white	Brown/white	Green/Black	red

3.Fuel pump

Note:

●The fuel pump is a precision component, which needs to be assembled in a dust-free workshop and requires strict testing, so it is forbidden to disassemble it by yourself.

●The engine of this motorcycle is designed with a high compression ratio, it is recommended to add 95# and above unleaded gasoline for a long time, in order to prolong the service life of the motorcycle, please be sure to refuel at a regular gas station.

●It is forbidden to carry out the operation test of the fuel pump in the dry state or in the water, otherwise its service life will be shortened, and in serious cases, it will be directly damaged. The positive and negative wires of the fuel pump cannot be reversed. It is forbidden to disassemble the inlet filter, which can easily cause foreign matter to enter the fuel pump or block the injector.

●Dismantling the fuel pump or high-pressure oil pipe should be carried out in a well-ventilated, dust-free or dust-free environment; Dangerous operations such as fireworks or mobile phone calls should be strictly prohibited in the dismantling site.

When there is difficulty in engine starting or dust-free starting; Poor engine work, unstable operation, etc.; The injector does not inject fuel; When the engine is running weakly and the acceleration performance deteriorates, it is necessary to check whether the fuel pump is abnormal.

Dismantle the surrounding floor and high-pressure tubing. Use an oil pressure gauge to measure the fuel pressure, or a simple test method to test whether the fuel pump is healthy.



If you need to remove the fuel pump from the vehicle, you can use a siphon pump to drain the fuel from the fuel tank.After lifting the vehicle, press the plug clip as shown in the diagram to disconnect the wiring.Using a 10mm socket, remove the 5 bolts from the bottom, then remove the high-pressure fuel line bracket. Once the bracket is removed, the fuel pump can be taken out.

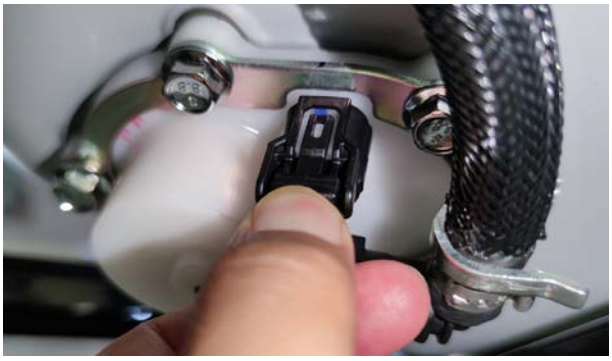

Note that you should not press the outlet pipe shown in red, and once damaged, you can only replace the entire fuel pump assembly.

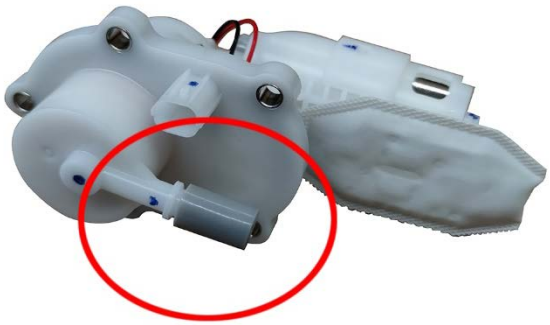

When reassembling, it is necessary to pre-tighten diagonally and then tighten 5 bolts, otherwise the uneven compression of the sealing rubber ring of the fuel pump will easily lead to leakage and cause potential safety hazards.

4.Canister solenoid valve

When there is suboptimal engine performance; Poor idling; When the air-fuel ratio is incorrect, the solenoid valve of the carbon canister should be checked.

Use a multimeter to measure the resistance between the two tabs of the solenoid valve plug of the canister should be 35±2Ω, otherwise the solenoid valve fault can be judged.



5.EFI relays

There are 5 relays (start assist, light, oil pump, main relay, cooling fan) at the relay bracket on the left side of the front riser of the head.

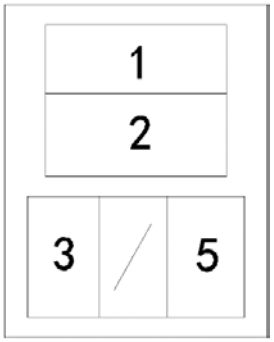



Cable ends Relays

3 and 5 are normally closed contacts and can be tested with a multimeter buzzer. 1 and 2 are normally open contacts. Otherwise, it can be judged as a relay failure.

The following cable end colors are used as a reference and are subject to the actual situation of the vehicle. There may be differences in thread color from batch to batch, but the function is the same. Cable End Color:

Wire Number Relay	1	2	3	5
Lights	Red	Blue/ White	Black/ White	White
Start Assist	Green	Green/ Red	Black/ White	Red/ Green
Fuel Pump	White/ Black	Red/ Black	White/ Black	Green/ Yellow
Main Relay	Red	White/ Black	Black/ White	Orang/ Black
Front Motor	Green	Light Green	Black	White
Rear Motor	Green	Light Green	Black	White
Cooling Fan	Green	Green/ White	Black	Green/ Blue
Rear Box Start	Green	Light Green	White	Black/ White

6.Injector

When the engine is unstable, the acceleration is weak, and the power performance is poor, it is necessary to check whether the injector is normal.

The seat cushion and storage compartment must be removed first.

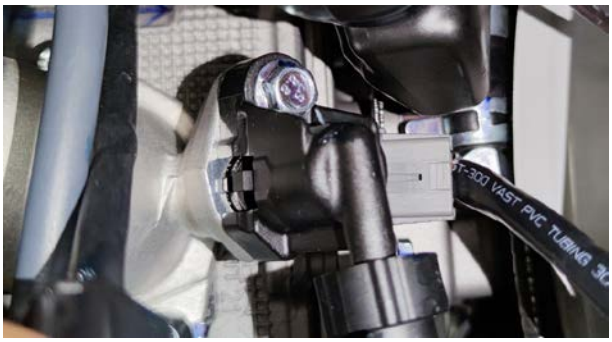

It can be judged by the following methods:

a. Start the engine after the motorcycle is parked firmly and make the engine idle. With the help of a stethoscope needle or stethoscope to listen to the working sound of the cylinder, you should be able to hear the rhythmic working sound of the injector, and the sound is crisp and even, it will work normally, if the sound is small or inaudible, you need to remove the injector for troubleshooting. Or when the injector plug is unplugged, the engine stalls indicating that the injector is normal.



b. Press the anti-disengagement latch and pull out the plug. The static coil resistance measured with a multimeter should be 12±0.6Ω, otherwise the injector will fail and need to be replaced.



If you need to replace the injectors, wait until the engine and muffler have cooled down.

After placing the oil connection container at the bottom, pull out the high-pressure oil pipe at the end of the fuel pump according to the steps of removing the high-pressure oil pipe, and release the residual fuel. Remove the bolt (1) with a 10# sleeve and remove the injector holder (2) to remove the injector (3).

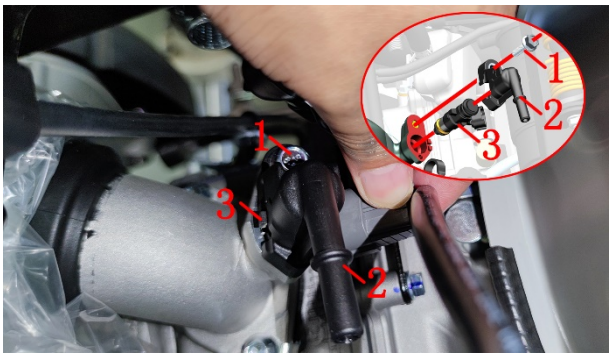

7.Throttle body

7.1 Common fault signs

1. When the motorcycle is driving, the engine is easy to stall, and it is difficult to start, especially the cold start.
2. The idle speed is unstable or there is no idle speed, and there is intermittent shaking when accelerating.
3. Insufficient power, poor acceleration performance, and unstable operation.

7.2 Troubleshooting process

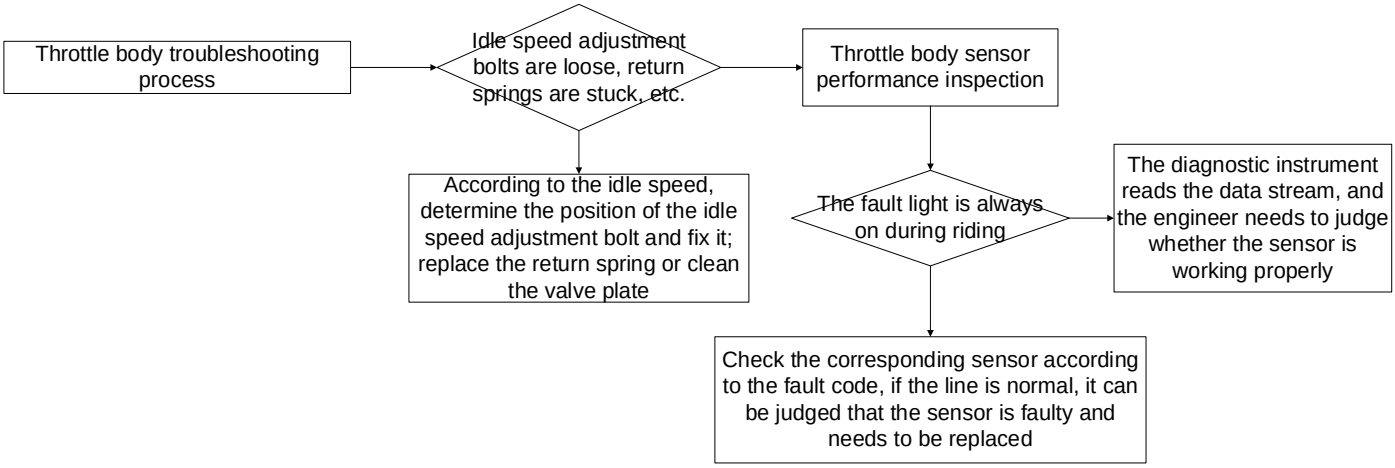

7.3 Sensor

For details of the disassembly and detection of the throttle body position sensor and the external intake pressure sensor, please refer to the previous section of the throttle body.



Air filter inlet air temperature sensor.

Remove the temperature sensor from the air filter, place it in the ambient temperature (20~30°C), and use a multimeter to detect whether the resistance of the two pins is between 2726~1770Ω.

8.Water and oil share sensors



When the engine is difficult to start, the idle speed is unstable, the engine performance is poor, and it is easy to stall, it is necessary to check whether this sensor is abnormal. The fault code can be read by the diagnostic instrument to confirm whether the water and oil sharing sensor is faulty.

First, remove the storage box according to the steps of disassembling the storage box, and remove the throttle valve body according to the steps of disassembling the throttle valve body to facilitate the disassembly of the water and oil sharing sensor. Located on the right side of the intake manifold. Pinch the top of the plug first, press the anti-disconnection card, and then pull the plug outward.

The resistance value of the two-pin room temperature of the multimeter is: 1.5~4.0kΩ.

Due to limited space, it is recommended to use a 72-tooth 17# ratchet torx wrench counterclockwise to remove the water and oil common sensor and remove the 9×2 EPDM O-ring. When reassembling, replace the O-ring with a new one to avoid leakage.



Standard torque: 13±1.5N.m (1.3±0.2 kgf.m, 10±1 lbf.ft)

9.Oxygen sensor

⚠WARNING

●Always wait until the engine and muffler have cooled completely before removing the oxygen sensor.

When there is poor engine performance, unstable idle speed, high fuel consumption, and incorrect air-fuel ratio, the oxygen sensor needs to be checked. The fault code can be read by the diagnostic instrument to confirm whether the oxygen sensor is faulty.

9.1 Detect

Locate and unplug the oxygen sensor fitting at the front elbow of the muffler.

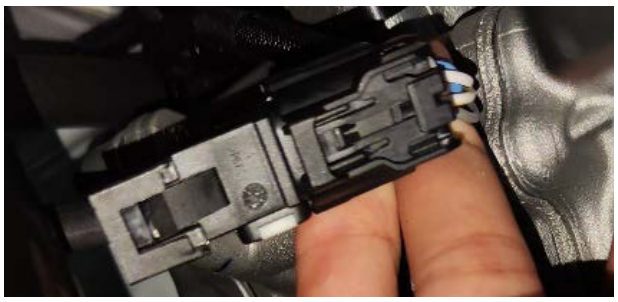

The resistance value of the heating element measuring the two white wires with a multimeter is 9±2kΩ; or measure its current should be ≤ 2.1A. Otherwise, it can be judged that the oxygen sensor is faulty. The ceramic inside the oxygen sensor is hard and brittle, and it is forbidden to use a hard object to knock or blow with a strong gas, otherwise it is easy to cause damage.Or remove the oxygen sensor to observe the color of the tip of the head, which is normally light gray. If it is white, it means that the silicon poisoning has been damaged and needs to be replaced, if it is black, it means that there is carbon deposit, and it can be cleaned up and continued to be used; If it is brownish-yellow, it is lead poisoning and needs to be replaced.

10.MSE8.0 ECU

When the engine fails to start and the performance is poor, check whether the ECU is normal. Because the ECU is complex and difficult to judge, the elimination method can generally be used to remove the ECU from the normal motorcycle of the same model and replace it with the faulty vehicle.Refer to the steps of "Disassembly of the motorcycle cover - disassembly of the rear skirt assembly" to remove the tail skirt and rear tail lights to expose the ECU.

The index finger and middle finger are located under the lever, and while pressing the buckle with your thumb, turn the index finger and middle finger firmly in the direction of the thumb to unplug the ECU. The ECU (2) can be removed by removing the bolt (1) with a 5# hexagon socket.

11.Crankshaft position sensor

When there is a dust-free start or difficulty in starting the engine; poor acceleration and unstable idling; When the ignition is intermittently turned off, check whether the crankshaft position sensor is normal.The crankshaft position sensor is mounted on the right crankcase cover and is integrated with the magneto stator. Find the sensor plug on the right side of the body, press the head anti-release latch, and pull it out. The resistance of the crankshaft position sensor (1) measured with a multimeter should be 150±20Ω at 25°C (77F), otherwise it should be replaced.In addition, the three-prong plug of the magneto stator (2) should be 0.7±0.15Ω when measuring the phase-to-phase resistance of any two terminals with a multimeter at 25°C (77F).

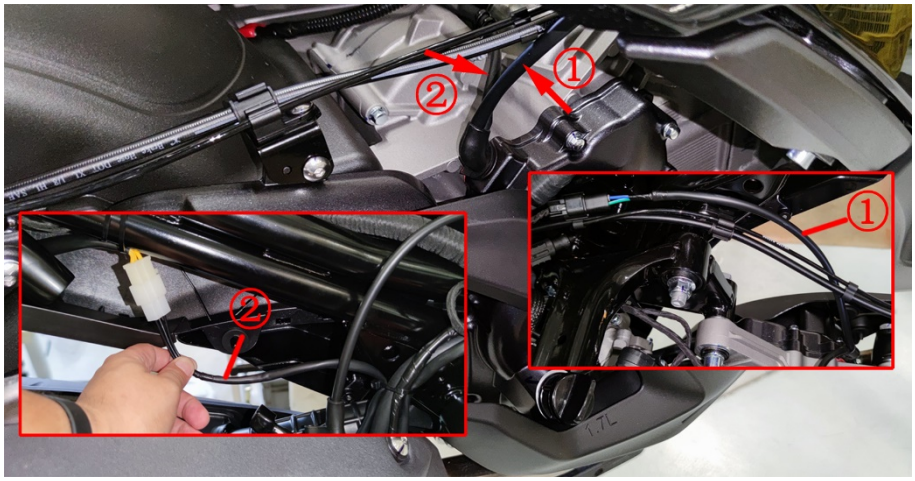
①
②
①
②


①
①
②

Engine Fails to Start and No Starting Symptoms Fault Diagnosis Process

When pressing the start button to start the motor can drive the engine to run normally, but the engine cannot work normally, and there are no signs of landing, you can refer to the following diagnostic process to investigate the cause of the fault.

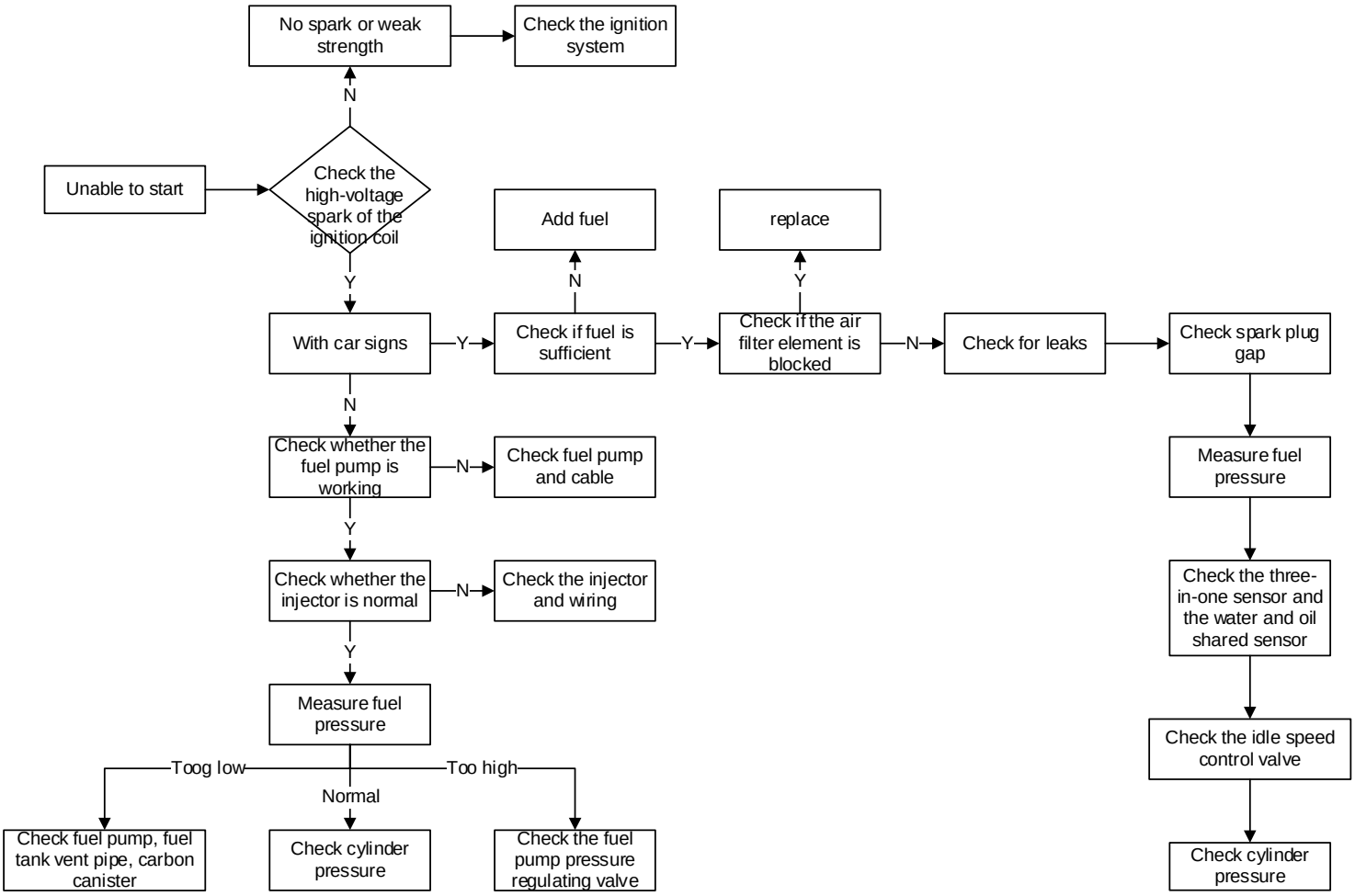

Engine Fails to Start but Shows Signs of Starting Fault Diagnosis Process

When pressing the start button to start the motor can drive the engine to run normally, and there are signs of the motorcycle but it cannot start, you can refer to the following diagnostic process to investigate the cause of the failure.

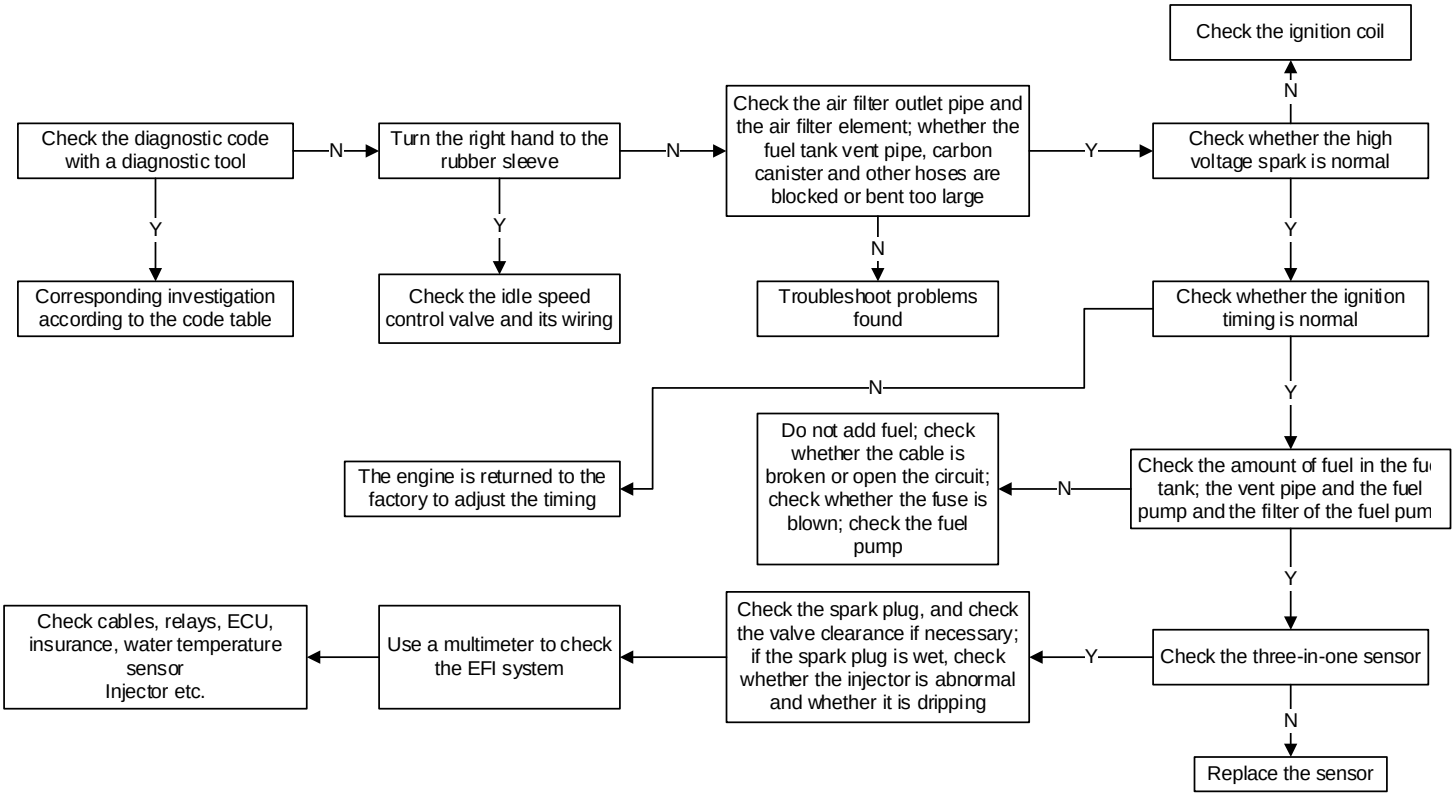

Poor acceleration

Turning the right hand handle rubber sleeve engine speed can not be increased immediately, there is a lag phenomenon, and the acceleration is slow; You can refer to the following diagnostic process to troubleshoot the cause of the fault.

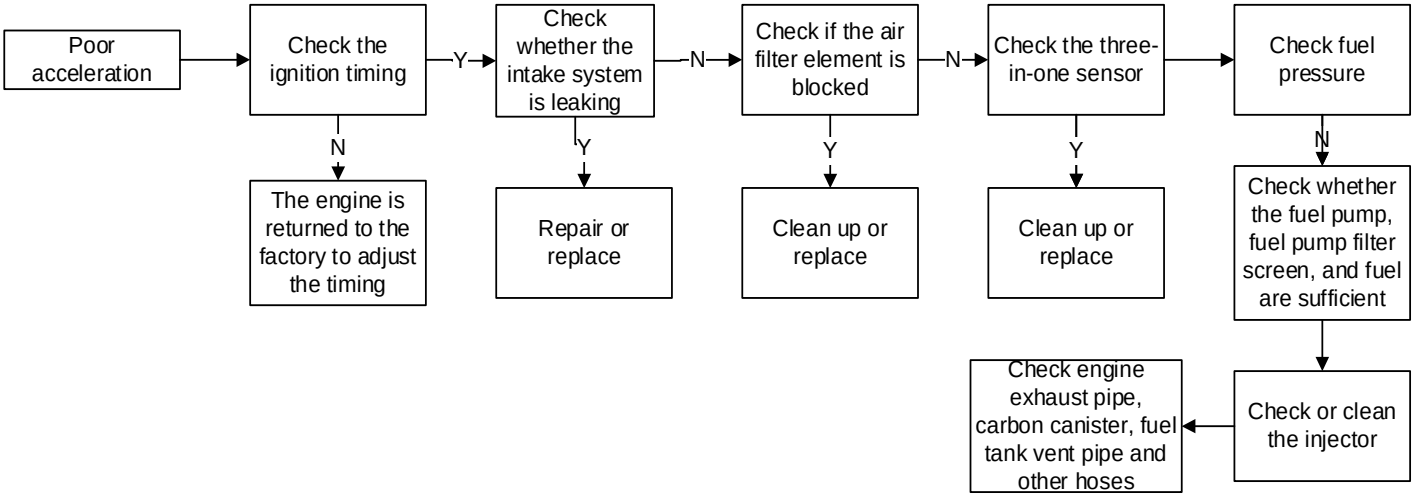

The idle speed of the hot motorcycle is high

When there is a cold motorcycle, it can run normally and quickly, and the idle speed does not fall back to 1500-1700 rpm after the hot motorcycle, you can refer to the following diagnostic process to troubleshoot the cause of the failure.

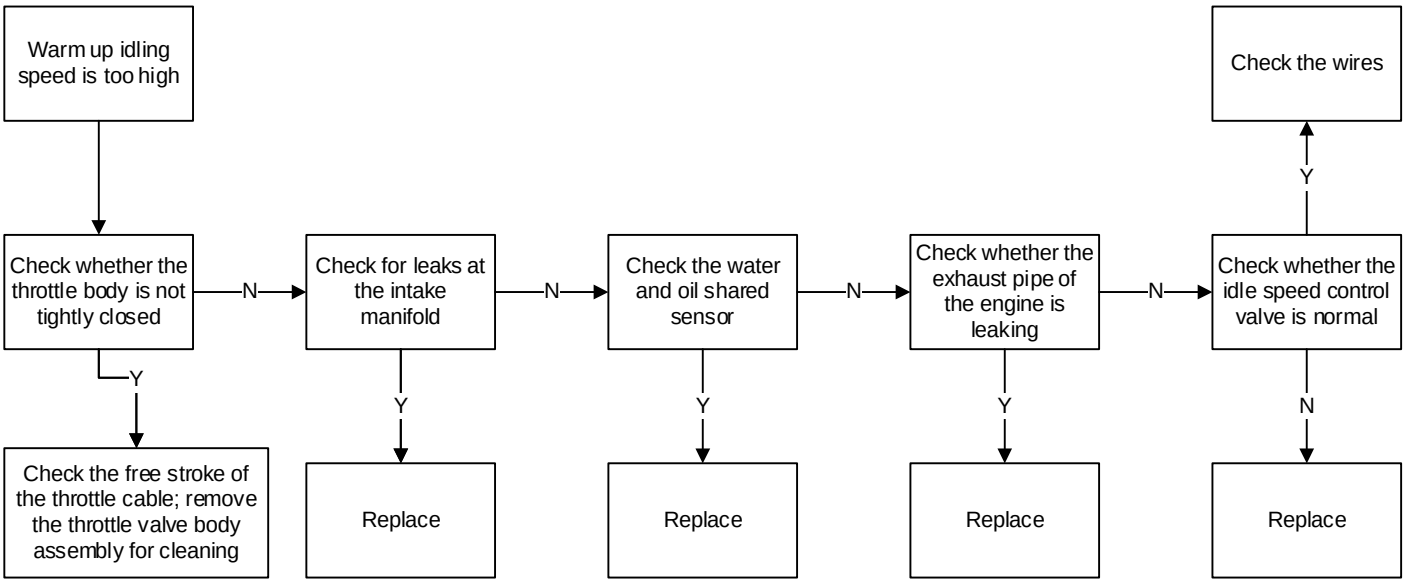

The cooling motorcycle is unstable at idle

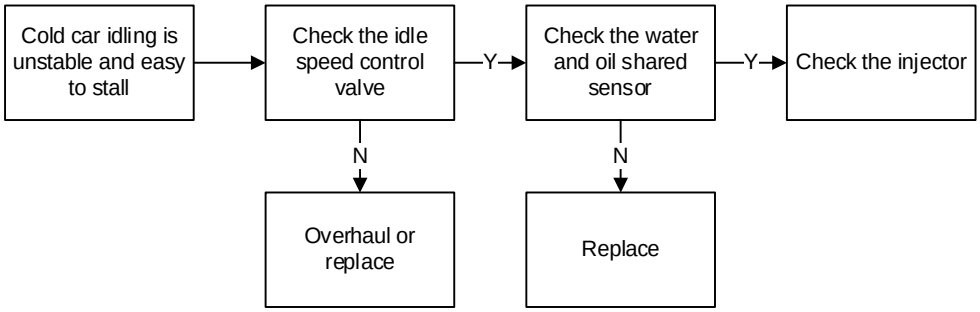

Unstable Idle, Prone to Stalling

If the engine idles unevenly and is prone to stalling, but returns to normal after the engine warms up, you can follow the diagnostic process below to troubleshoot the cause of the fault.

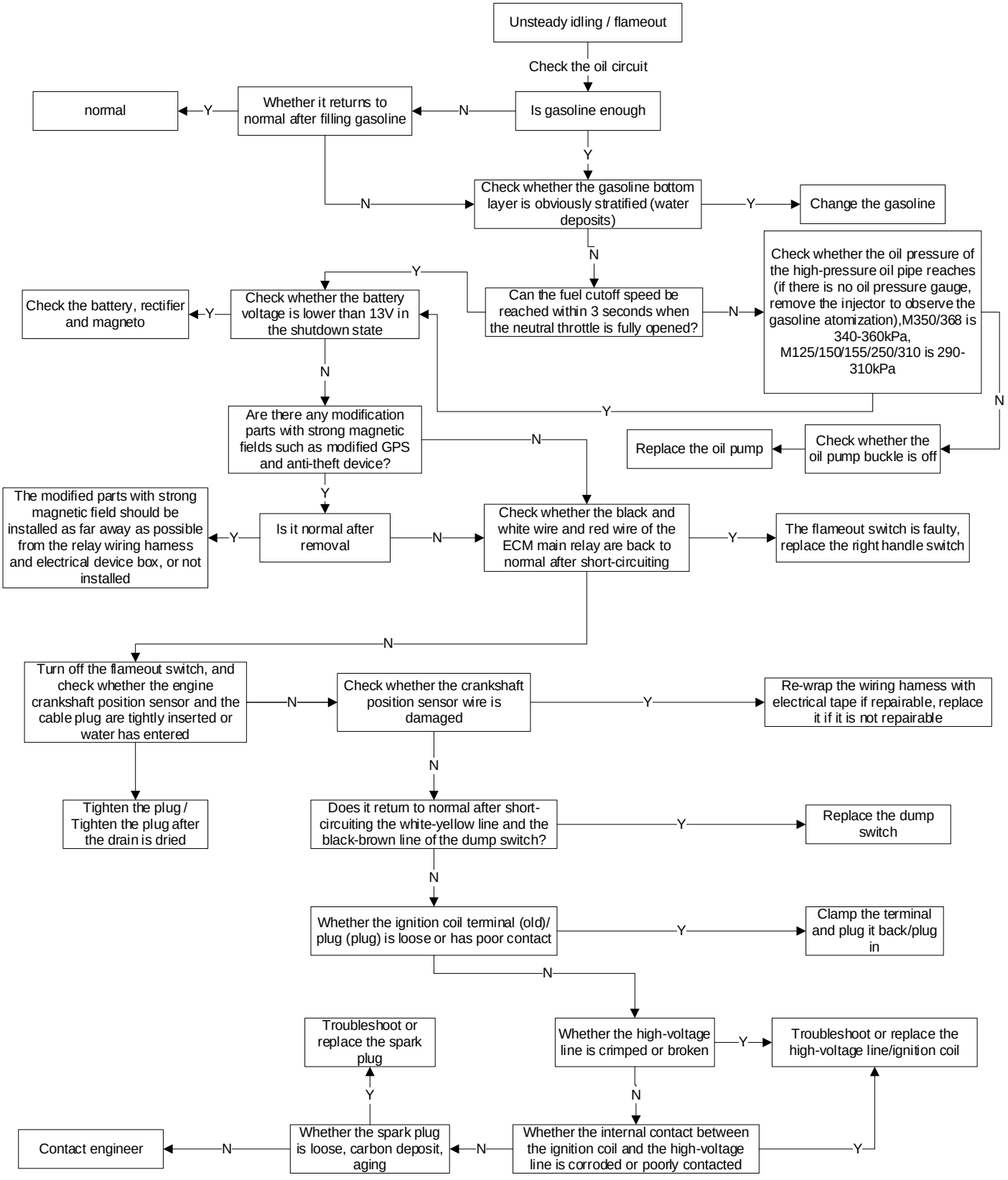
Unsteady idling / flameout
Check the oil circuit
Is gasoline enough
Whether it returns to normal after filling gasoline
normal
Check whether the gasoline bottom layer is obviously stratified (water deposits)
Change the gasoline
Can the fuel cutoff speed be reached within 3 seconds when the neutral throttle is fully opened?
Check whether the oil pressure of the high-pressure oil pipe reaches (if there is no oil pressure gauge, remove the injector to observe the gasoline atomization),M350/368 is 340-360kPa, M125/150/155/250/310 is 290-310kPa
Check whether the battery voltage is lower than 13V in the shutdown state
Check the battery, rectifier and magneto
Check whether the oil pump buckle is off
Replace the oil pump
Are there any modification parts with strong magnetic fields such as modified GPS and anti-theft device?
Is it normal after removal
The modified parts with strong magnetic field should be installed as far away as possible from the relay wiring harness and electrical device box, or not installed
Check whether the black and white wire and red wire of the ECM main relay are back to normal after short-circuiting
The flameout switch is faulty, replace the right handle switch
Turn off the flameout switch, and check whether the engine crankshaft position sensor and the cable plug are tightly inserted or water has entered
Check whether the crankshaft position sensor wire is damaged
Re-wrap the wiring harness with electrical tape if repairable, replace it if it is not repairable
Tighten the plug / Tighten the plug after the drain is dried
Does it return to normal after short-circuiting the white-yellow line and the black-brown line of the dump switch?
Replace the dump switch
Whether the ignition coil terminal (old)/ plug (plug) is loose or has poor contact
Clamp the terminal and plug it back/plug in
Whether the high-voltage line is crimped or broken
Troubleshoot or replace the high-voltage line/ignition coil
Troubleshoot or replace the spark plug
Whether the internal contact between the ignition coil and the high-voltage line is corroded or poorly contacted
Whether the spark plug is loose, carbon deposit, aging
Contact engineer
Y
N

EFI (Electronic Fuel Injection) Fault Indicator Light On: Analysis Flowchart

If the EFI fault indicator light "" stays on, the first step is to check if the connections of the EFI sensors are loose.

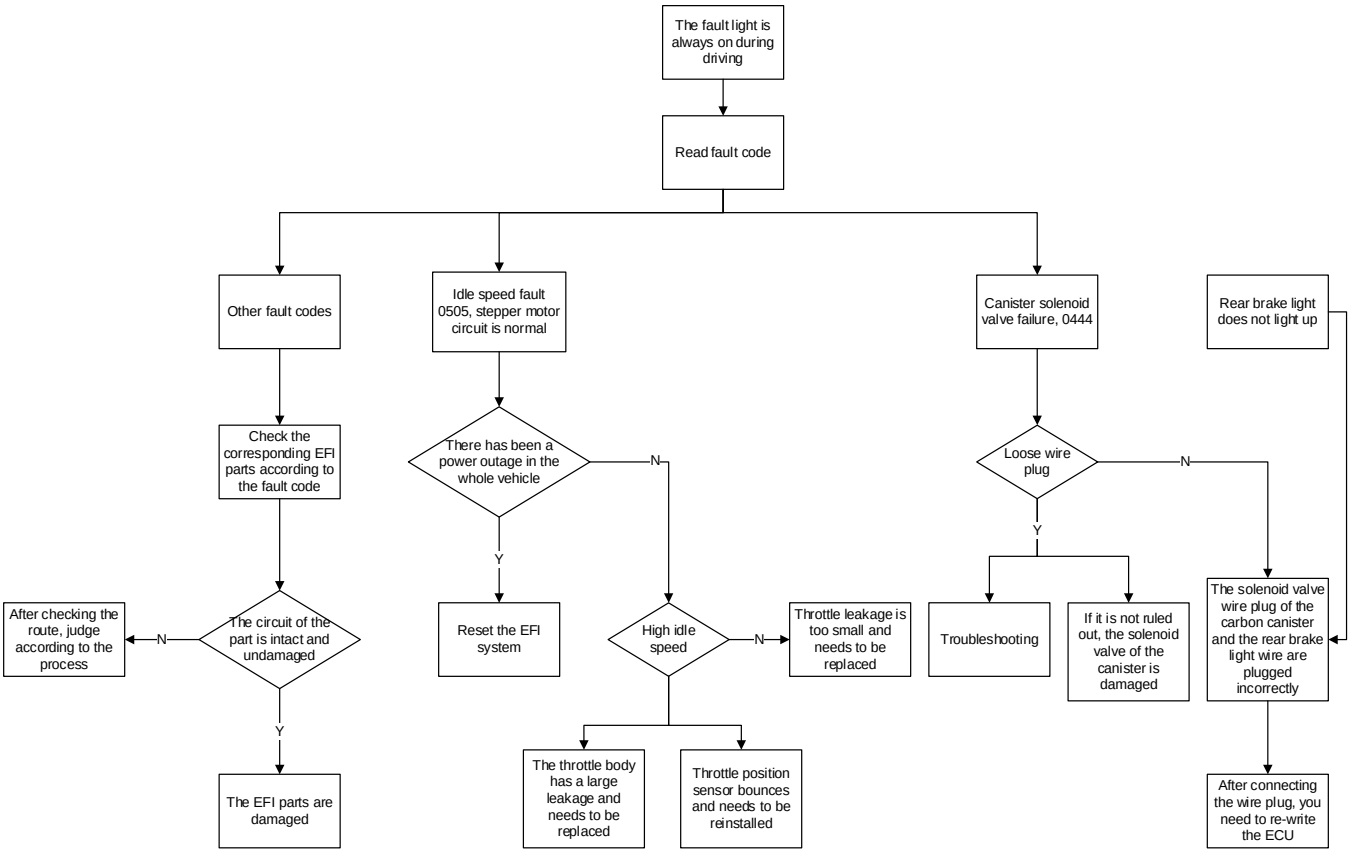

EFI System Electrical Schematic Diagram

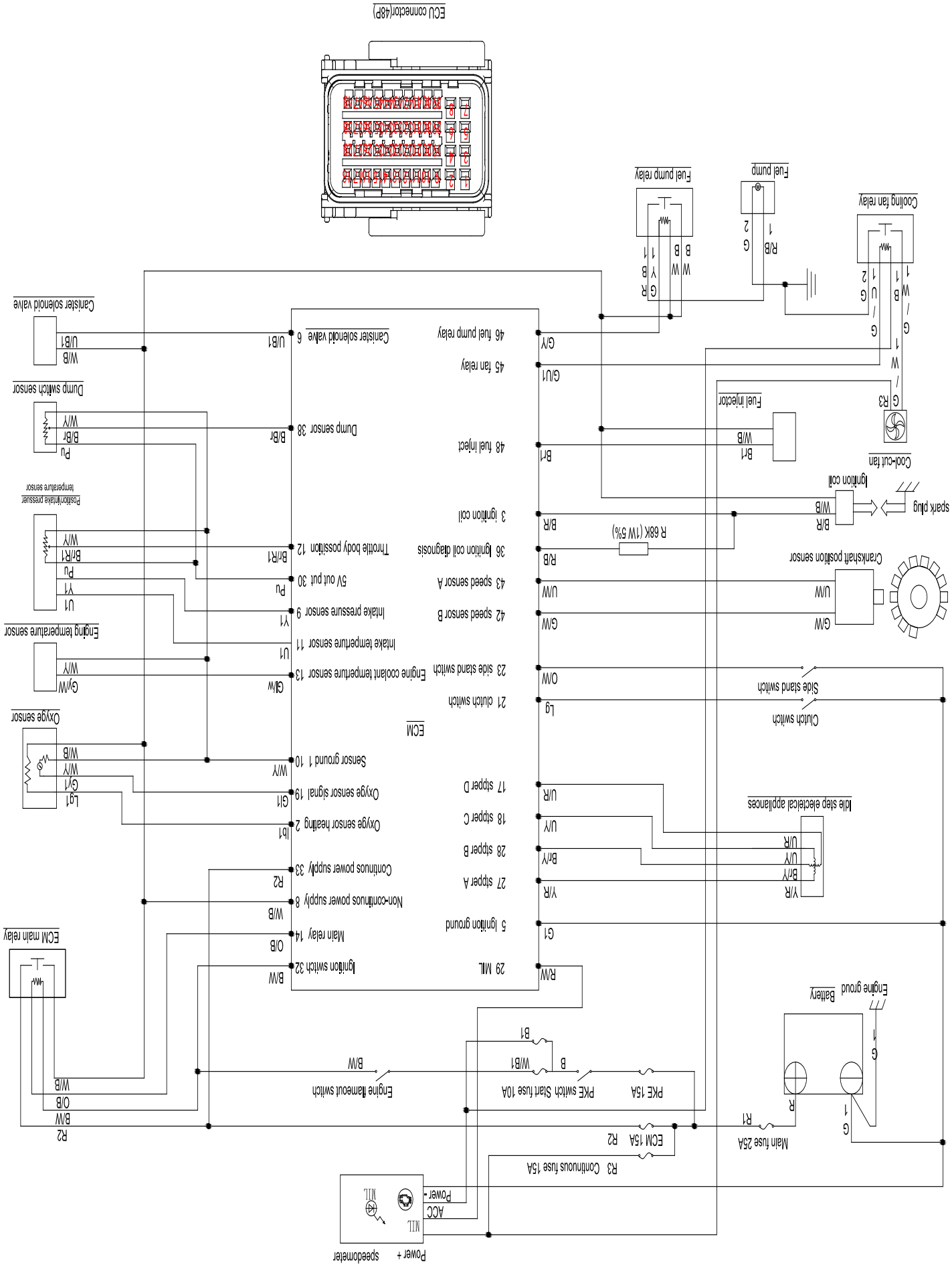

4.ignition system

Know Before Service

1.The content of this chapter requires certain maintenance experience, and it is recommended to go to a maintenance unit with maintenance qualifications for inspection or maintenance.

2.After powering on, the parts connected to the 12V power supply should not be dismantled at will, so as to avoid the coil in the appliance from self-induction and instantaneous voltage damage to the ECU or sensor.

3.Use a spark plug with the correct calorific value, a spark plug with an inappropriate calorific value may damage the engine.

4.Ignition system failures are common due to poor plug connections and corrosion of terminals, and should be checked as a priority.

5.Since the ECU is factory preset, the ignition timing cannot be adjusted. If you need to adjust the ignition timing, you can only return to the factory for maintenance.

6.Make sure the battery is fully charged, if it is not charged, it may cause a slower start or a weak or no spark from the spark plug.

Tool:

Multimeter


7.Each motorcycle has different driving conditions and maintenance conditions, so it is not possible to list all the fault phenomena and troubleshooting procedures. Only some of the more common faults can be listed. Maintenance personnel themselves also need to have a certain amount of professional knowledge and experience accumulation process.

8.For details of spark plug disassembly and inspection, please refer to the "Spark Plug" section in the chapter "Maintenance" of this manual. Before removing the spark plug, you need to use a dust blow gun to clean up the surrounding debris and dust, and after removing it, you need to block the spark plug mouth to prevent foreign objects from falling into the engine.

9. If there is a “  ” symbol on the right side of the step, you can click to quickly jump to the corresponding step.

WARNING

●Do not plug and unplug the plugs of each part at will, and do not directly clean the plug with water. Always check that it is properly plugged back in after plugging and unplugging.

Troubleshooting

Check the following items before diagnosing the ignition system

a.Check if the spark plug is abnormal.

b.Check if the ignition coil's high-voltage cap or connector is loose.

c.Check if the high-voltage cap has water ingress.

d.If there is no spark, find a working ignition coil from the same model and install it on the faulty vehicle to test if there is spark.

e.Check the "initial voltage" of the ignition primary coil when the kill switch is set to " " and the engine is not started, and verify if it matches the battery voltage.

No Spark on Spark Plug

1.Improper spark plug clearance

If the gap is too small, it suppresses flame generation, resulting in weak spark intensity. If the gap is too large, the ignition voltage leads to no spark. Adjust the gap to the standard 0.8–0.9mm (0.031–0.035 in).



2.A film of oil is attached to the surface of the spark plug electrode

Oil or gasoline entering the combustion chamber and adhering to the electrode surface causes a short circuit, preventing the spark. Oil typically enters through the gap between the piston and cylinder wall or valve guide, so check the gaps and replace any faulty parts. Gasoline accumulation may occur due to an overly rich mixture during cold starts, so clean the spark plug and try starting again.

3.The spark plug skirt is damaged.

High-voltage current leaks through the damaged skirt, causing a short circuit. Replace the spark plug.

4.The electrode has carbon buildup, causing the center electrode to leak current to the surrounding area instead of sparking.

Carbon or oil buildup on the electrode causes a short circuit and may damage the insulator. Clean the carbon buildup or replace the spark plug.

5.Damaged electrodes

The central electrode is chemically corroded by electric sparks or combustion gases for a long time, resulting in electrode damage; It needs to be replaced.

6.The insulation of the spark plug has decreased.

Reduced insulation weakens the ignition voltage, leading to weak or no spark. Replace the spark plug.

7.The ignition coil's high-voltage wire is short-circuited.

Replace the ignition coil.

8.The battery voltage is insufficient.

A weak battery can lead to weak spark intensity or no spark. Use the provided charger to charge the battery or ride the vehicle for a long distance to recharge.

9.ECU failure

After eliminating the above reasons, it can be judged from the good ECU removed from the same model motorcycle and replaced with the faulty vehicle.

Ignition system layout

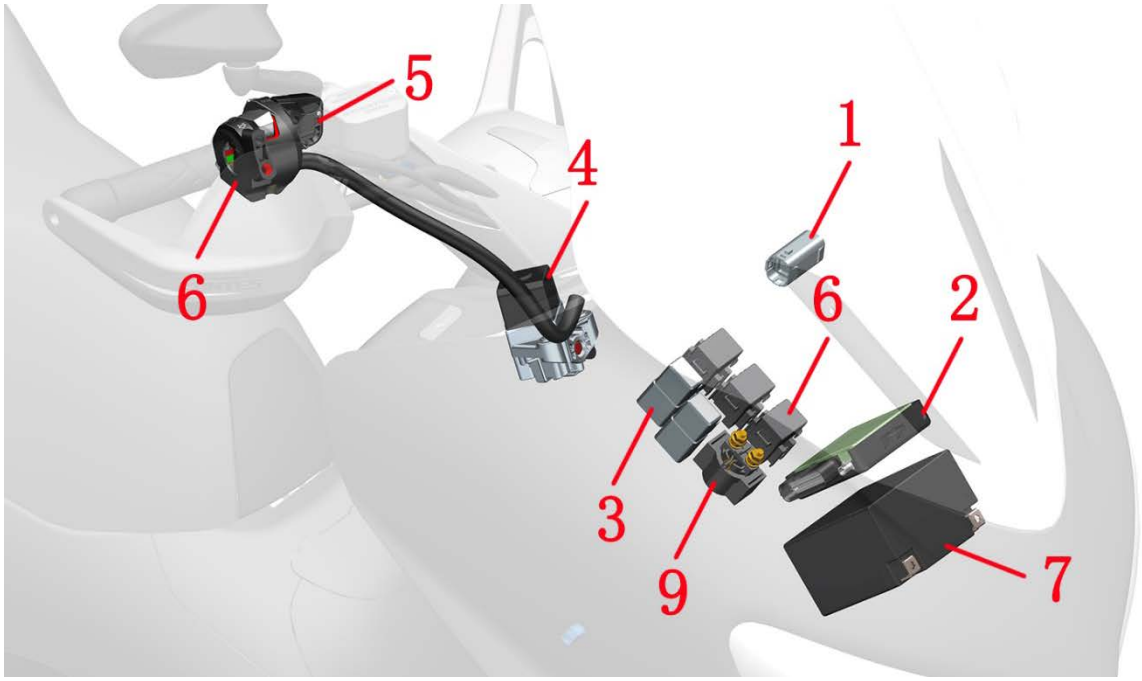

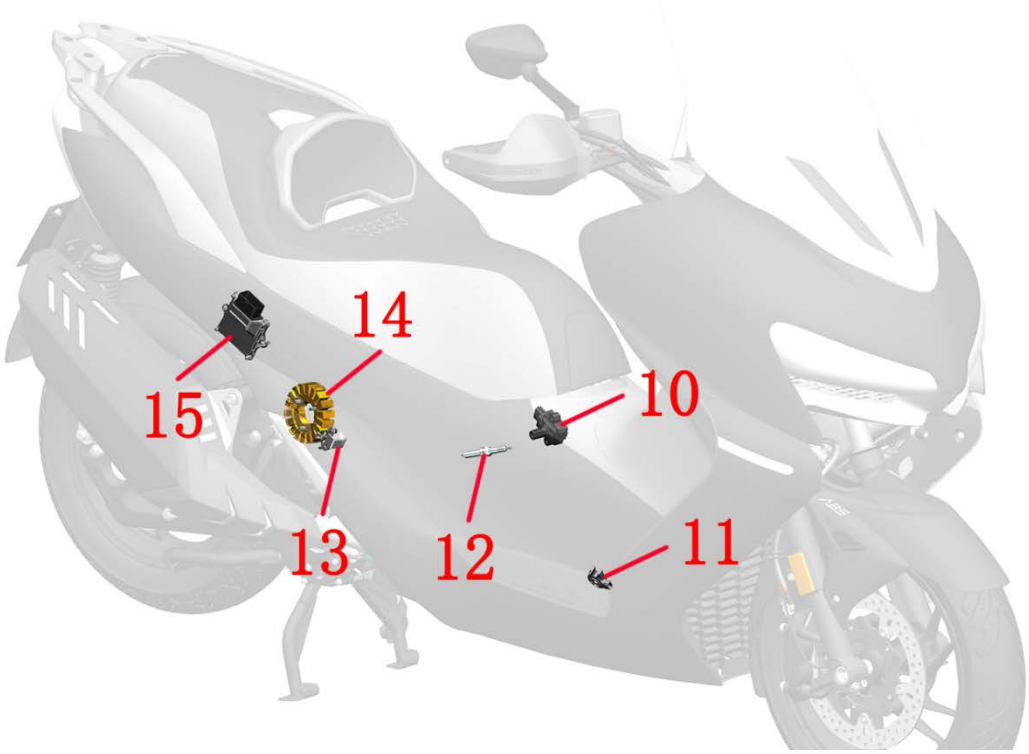

1-Tilt switch 2-PKE 3-Relays 4-Steering lock 5-The right hand handles the secondary switch
6-Right-hand handle switch 7-accumulator 8-Fuse box 9-Start the relay 10-Ignition coil
11-Side bracket kill switch 12-spark plug 13-Crankshaft position sensor 14-Magneto stator 15-ECU

Note:

●The fuse box is included with the main wiring harness and there are 3 of them. For detailed diagrams, refer to the "EFI System" chapter of this manual, specifically the "EFI Relay" section in the "EFI Components Fault Diagnosis and Troubleshooting" part.

●The magneto stator and crankshaft position sensor are integrated into a single part and cannot be replaced separately. For crankshaft position sensor fault diagnosis, refer to the "Crankshaft Position Sensor" section in the "EFI Components Fault Diagnosis and Troubleshooting" part of the "EFI System" chapter in this manual.

Ignition System Electrical Schematic Diagram

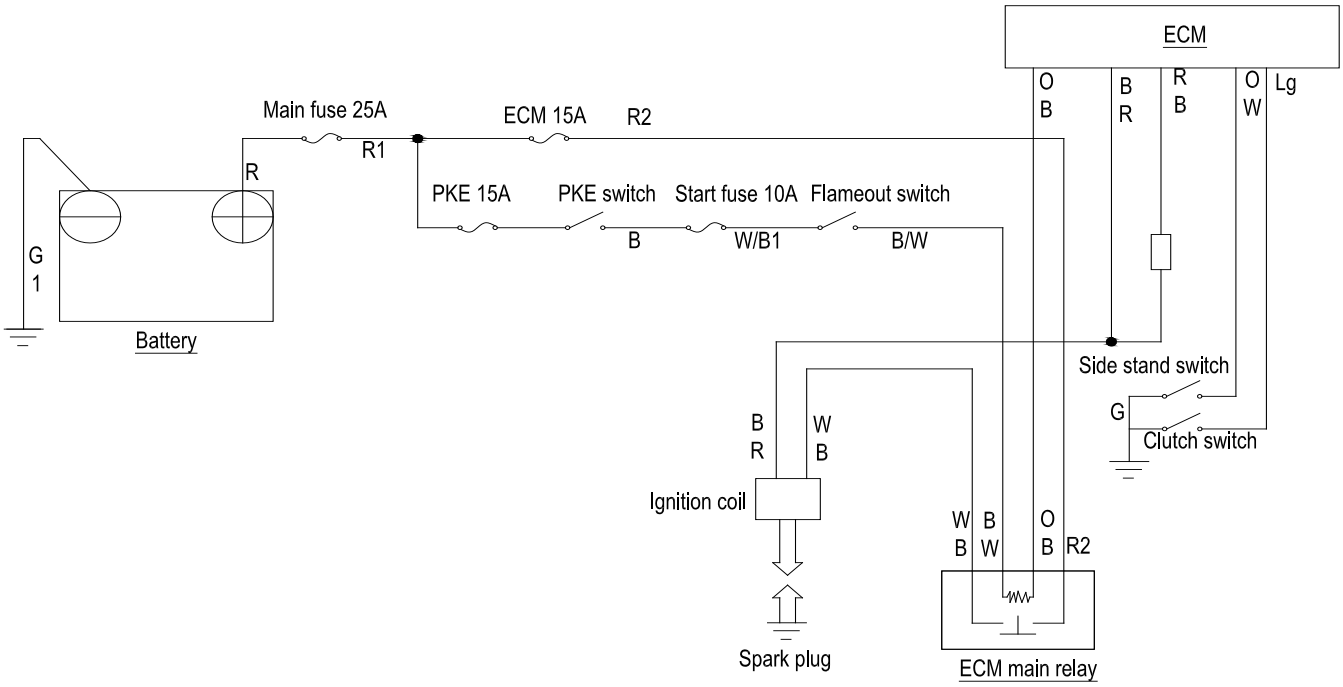

Ignition system check

Note:

●If there is no spark from the spark plug, all cable joints should be checked for loose or poor contact before the ignition system is checked.

●Use a high-precision digital multimeter.

For details of the ignition coil test method, please refer to the ignition coil section in the "EFI Parts Fault Diagnosis and Troubleshooting" chapter of this manual.

Pull out the high-pressure cap, find a spark plug of the same model to confirm that there is no abnormality, install it on the high-pressure cap, close to the cylinder head cover for ignition test, and confirm whether the ignition coil is faulty.

Refer to the crankshaft position sensor section in the "EFI Systems" chapter of this manual "EFI Systems" to check whether there is any abnormality.

Ignition timing

Note:

●Ignition timing is pre-set in the ECU before leaving the factory and cannot be adjusted. If adjustment is needed, the engine must be returned to the factory for repair.

●If the right crankcase cover and cylinder head cover need to be removed for timing inspection, the crankcase cover gasket must be replaced with a new one. It is also recommended to replace the cylinder head cover sealing gasket and apply sealant at the indicated position as shown in the diagram.

●Because specialized tools and equipment are required for assembly, detailed steps are not provided here, and only a general explanation is given.

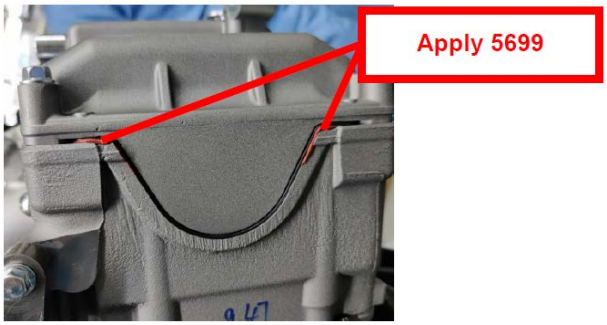

Check：

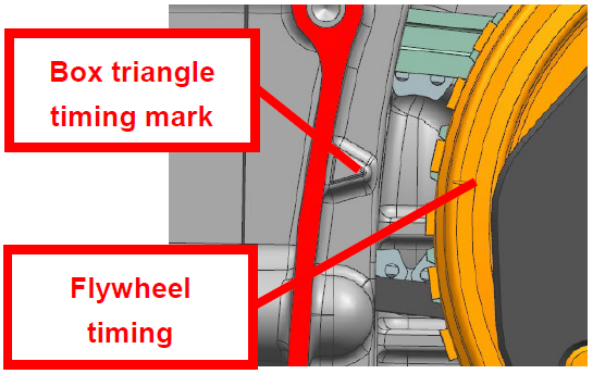

The triangle is aligned with the flywheel timing mark

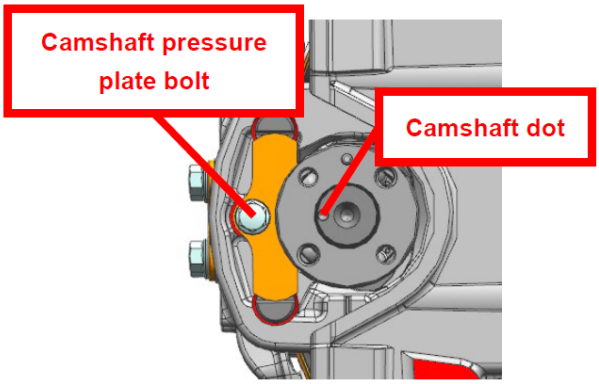

The bolt center is aligned with the dot center

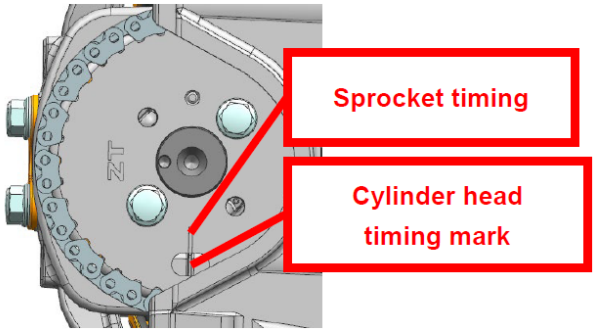

The timing of the sprocket is aligned with the timing of the cylinder head

Flywheel Checking Fixture：



Remove the rotor from the engine. Install the flywheel inspection tool as shown in Figure 1 and check whether the marking line on the rotor side is within the groove (as shown in Figure 2).



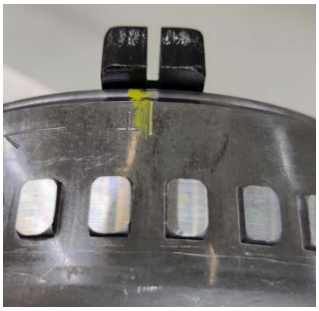

Installation

a.Align the flywheel keyway with the half-round key and install the flywheel. Place a ϕ10.3×ϕ28×4 washer and M10×1.25×45 hex flange bolt. Hand-tighten the bolt, pull the timing chain tight, and rotate the flywheel clockwise until the "T" mark on the flywheel aligns with the adjacent line and the triangle mark on the housing. Install the flywheel limiting tool, use an impact wrench to tighten the bolt, then correct the torque with a torque wrench. Mark with a marker. Torque: 75±7 N·m (7.7±0.7 kgf·m, 55±5 lbf·ft).

After correcting the flywheel bolt torque, rotate the starter large gear counterclockwise. If it turns smoothly, the assembly is correct. If it doesn't turn or rotates in both directions, remove the flywheel, reassemble, and inspect the one-way clutch. If the axial clearance when pulling the starter large gear upward is approximately 0.7mm (0.028in), the assembly is correct.

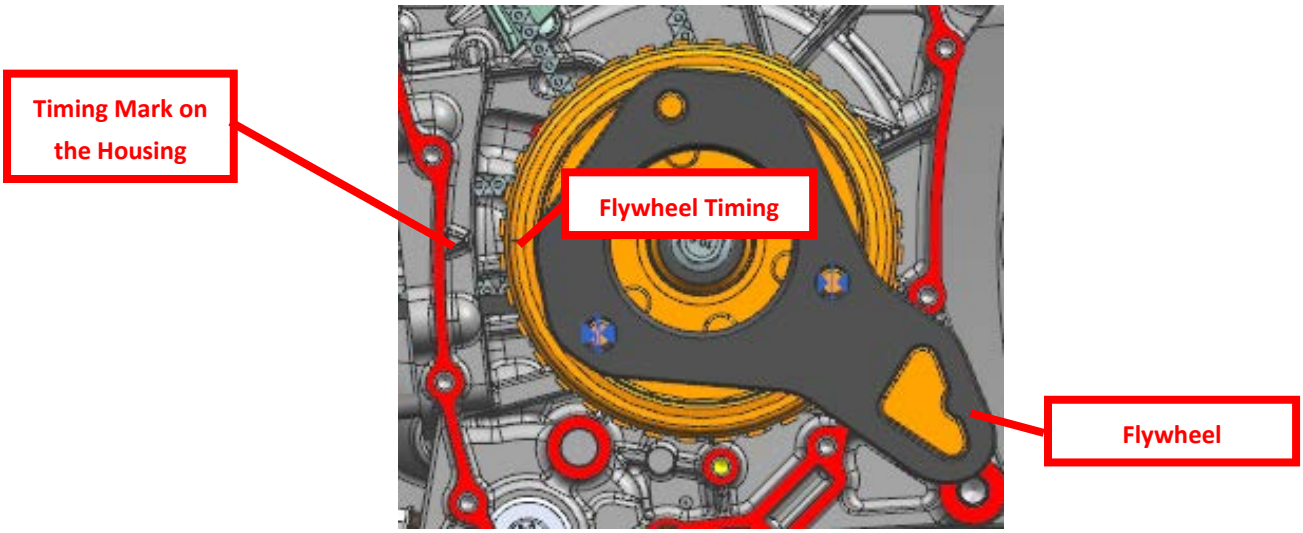

b.Tighten the timing chain again, and check that the "T" mark on the flywheel aligns with the adjacent line and the triangle mark on the housing.

c.Rotate the camshaft to align the dot with the camshaft clamp bolt. Install the timing-driven sprocket onto the timing chain and mount it onto the camshaft, ensuring the timing scale on the driven sprocket aligns with the timing scale on the cylinder head.

d.Apply thread sealant to the M6×16 bolts. Pre-tighten with an impact wrench, then use a torque wrench to tighten. Torque: 12±1.5 N·m (1.2±0.2 kgf·m, 9±1 lbf·ft). Mark with a marker.

e.Remove the flywheel limiting tool and return it to its original position.

f.Reinstall the engine components that were disassembled.

g.Use a complete engine leak detection device to check for leaks.

h.Reinstall the rear shock absorber assembly onto the vehicle.

Ignition Coil

For disassembly, assembly, and testing methods of the ignition coil, refer to the "Ignition Coil" section in the "Fuel Injection System" chapter of this manual, under "Fuel Injection Parts Fault Diagnosis and Troubleshooting."

5.Starting system

Know Before Service

1.If there is a current flowing through the starter motor when the engine is not started, it can be judged that the starter motor is damaged and needs to be replaced.

2.Before repairing the starter motor, the engine shutdown switch must be turned to "" to prevent personal injury caused by the sudden start of the starter motor due to misoperation.

3.When the power is insufficient, the engine may not be able to start quickly, or the ignition current may not be provided.

4.You can follow the steps in the troubleshooting process to inspect or repair the boot system.

5.If there is a " " symbol on the right side of the step, you can click to quickly jump to the corresponding step.

WARNING

●When the engine cannot be started, never press the electric start button frequently. Frequent operation can lead to overheating or damage to the starter motor, flooding of the cylinder, battery feeding, etc.

Troubleshooting

Note:

● Ensure that the battery has sufficient charge and is in good condition.

● Check whether the main fuse (25A) and ECM fuse (15A) are blown. If the fuse blows again after replacing it, check the wiring for faults first.

● The starter motor should operate under the following conditions:

a.Unlock the vehicle;

b.Retract the side stand;

c.Turn the engine kill switch to " ";

d.Press the start button.

Starter Motor Not Operating Troubleshooting Process:

1.Starting relays

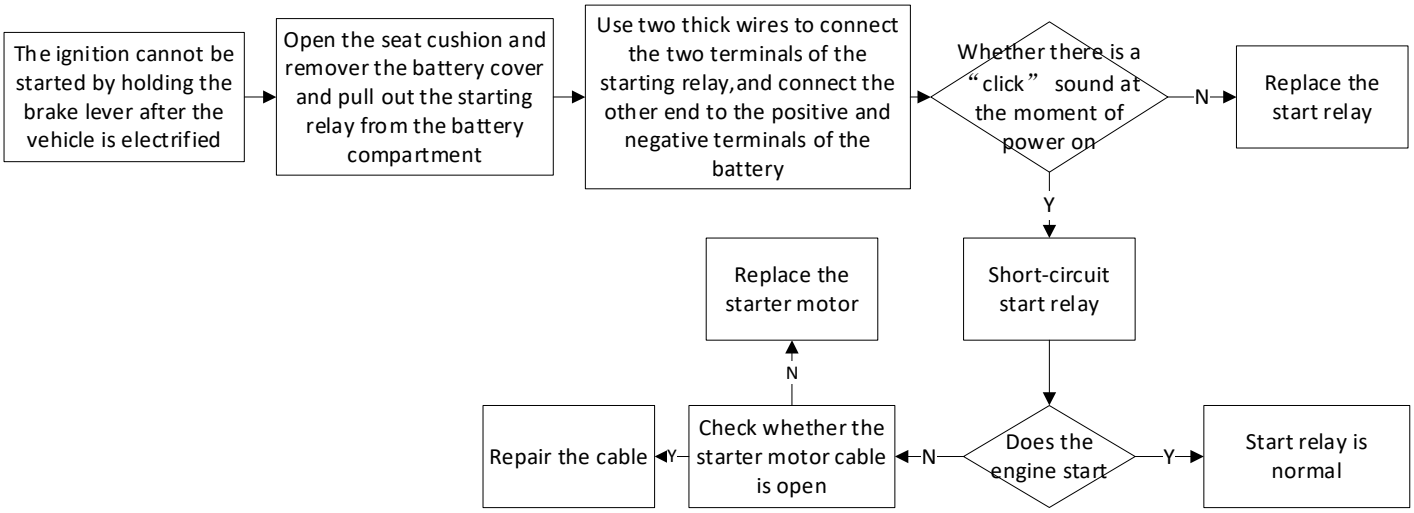

2.Starter motor

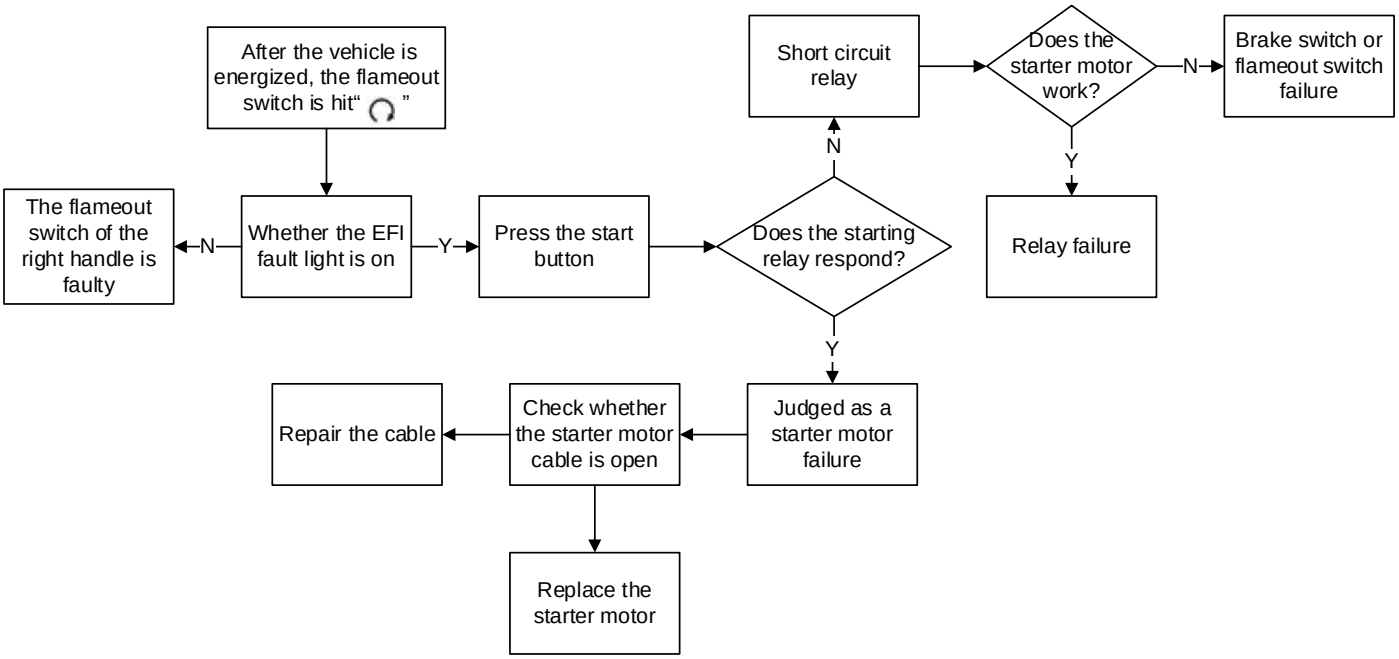

3.The starter motor runs slowly

Check whether the battery is insufficient;

Check whether the battery cable connector is in poor contact;

Check whether the starting motor cable is in poor contact;

Check whether the starter motor is abnormal.

4.The starter motor is working fine, but the engine does not start

Check whether the starter gear train is faulty;

Check for ignition system failures.

Starting system layout

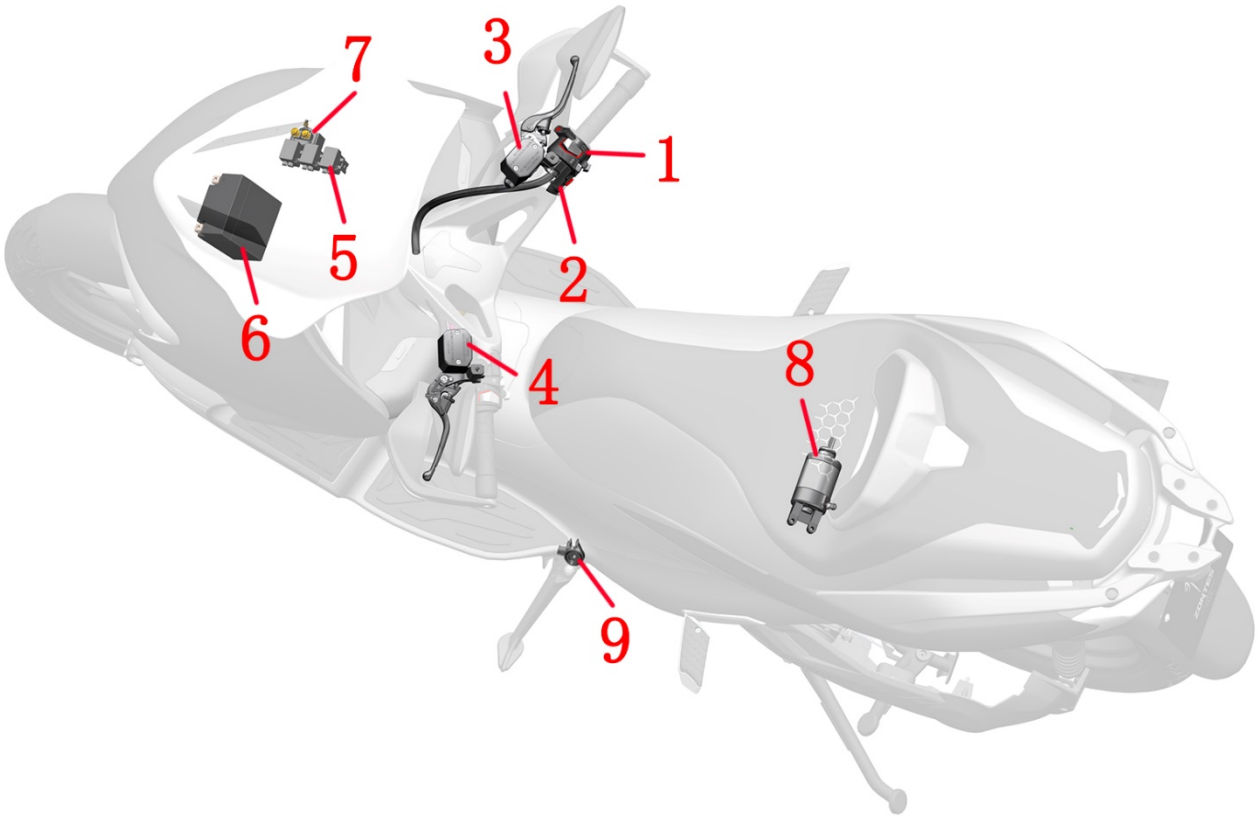

1- Right-hand handle switch (kill switch, start button) 2- Right hand handle sub switch (unlock vehicle)
3- Front disc brake main cylinder (front brake switch) 4- Rear disc brake main cylinder (rear brake switch)
5- Fuse 6- Accumulator 7- Starting relay 8- Starter motor 9- side bracket power off switch

Electrical schematic diagram of the starting system

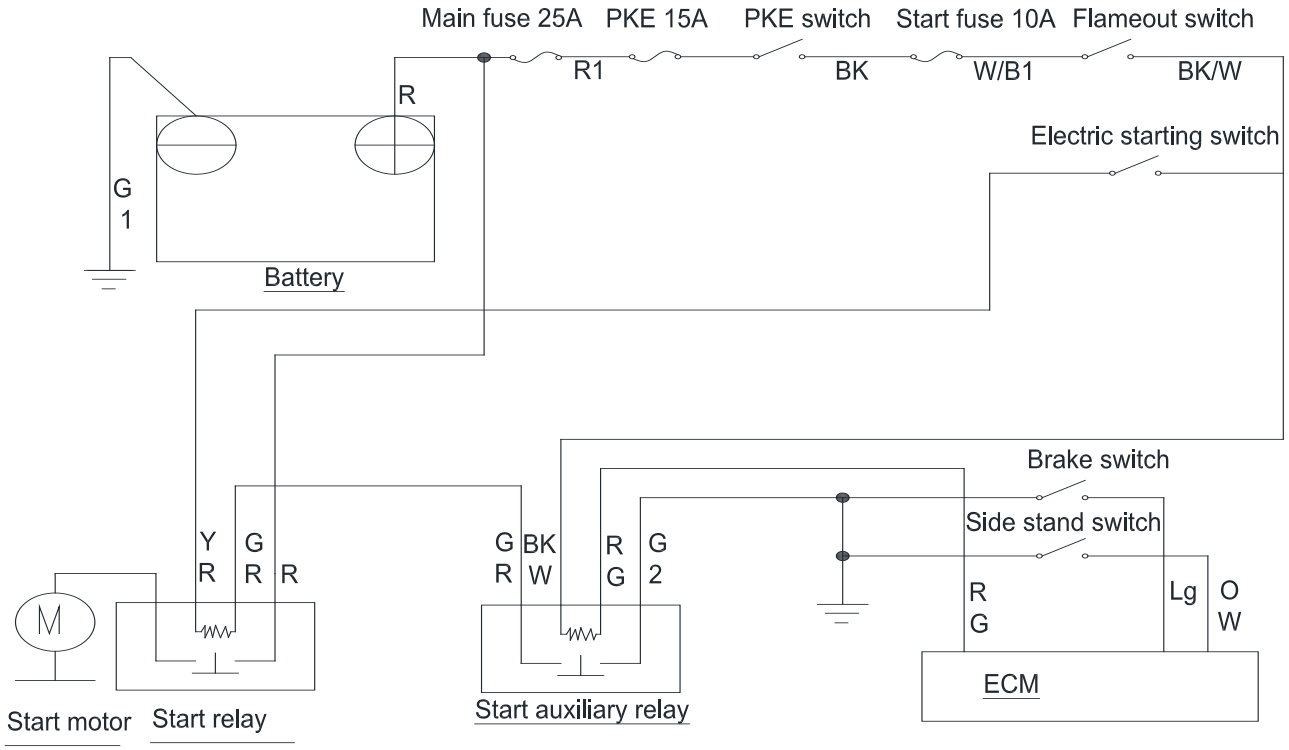

Starter motor

Note:

●If the starter motor is removed for maintenance, replace the O-ring with a new one and apply an appropriate amount of oil.

●Our company only sells starter motor assemblies, and does not sell O-rings and motor parts separately. The inner diameter of the O-ring is ϕ25mm (0.98in) and the wire diameter is 3mm (0.12in).

1.Remove the starter motor

a.Follow the steps for removing the rear storage box as described in the "Maintenance" chapter, under the section "Throttle Valve Body," which includes disassembling the stepper motor and cleaning carbon buildup.

b.Unfasten the magic tie wraps and cable clips.

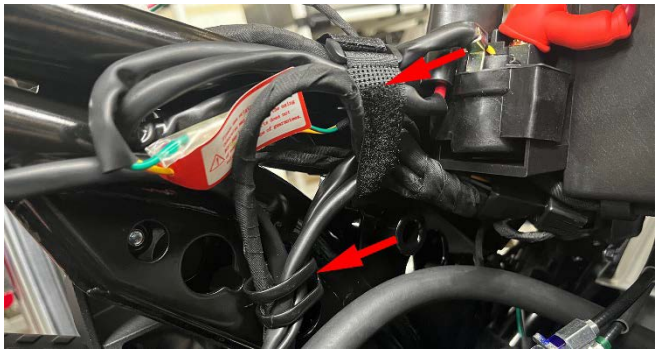

c.Loosen the clamp bolt shown in the figure countercl ockwise with 4# hexagon socket, and pull the air filter outlet pipe out of the throttle valve body in the directi on of the rear wheel.

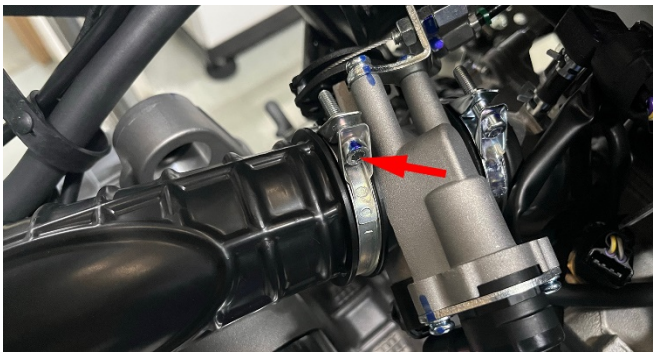

D.Pull the outlet pipe to the right side of the motorcycle to expose the two M6×30 bolts that fix the starting motor, and remove them with an 8# sleeve. After removing the bolts, remove the starter motor from the engine in the direction indicated by the large arrow.

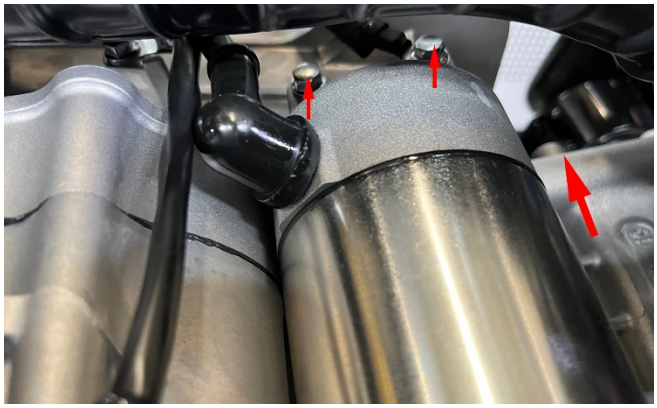

e.When reinstalling, pay attention not to omit the O ring of the starting motor, and align the teeth of the electric starting reduction gear. Note that the O-ring needs to be properly fitted into the box, as cutting edges can cause leakage. The torque of the two bolts that hold the starter motor in place: 12±1.5 N.m (1.2±0.2 kgf.m, 9±1 lbf.ft). and mark with a marker.



2.Disassemble the starter motor

Note:

●If the magnetic tile pulls the pistle towards the motor housing, the coil may be damaged.

●When installing the electric stick from the starting motor housing groove to the housing, make the commutator strip face the rear side;

●When installing the back cover of the starter motor, align the marking line with the index line;

●When installing the front cover of the starter motor, pay attention to prevent damage to the oil seal lip of the electric shaft, and align the marking line of the front cover with the index line on the motor housing. Disassemble and assemble the starter motor as shown below.

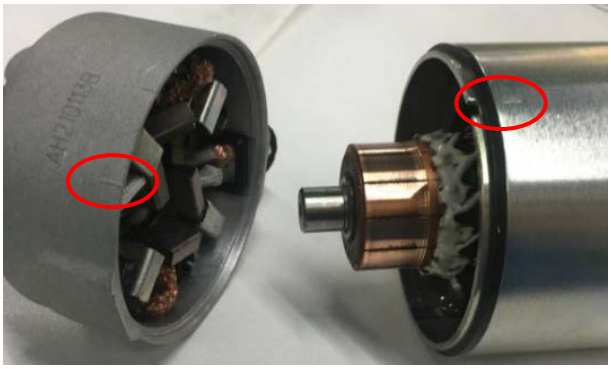



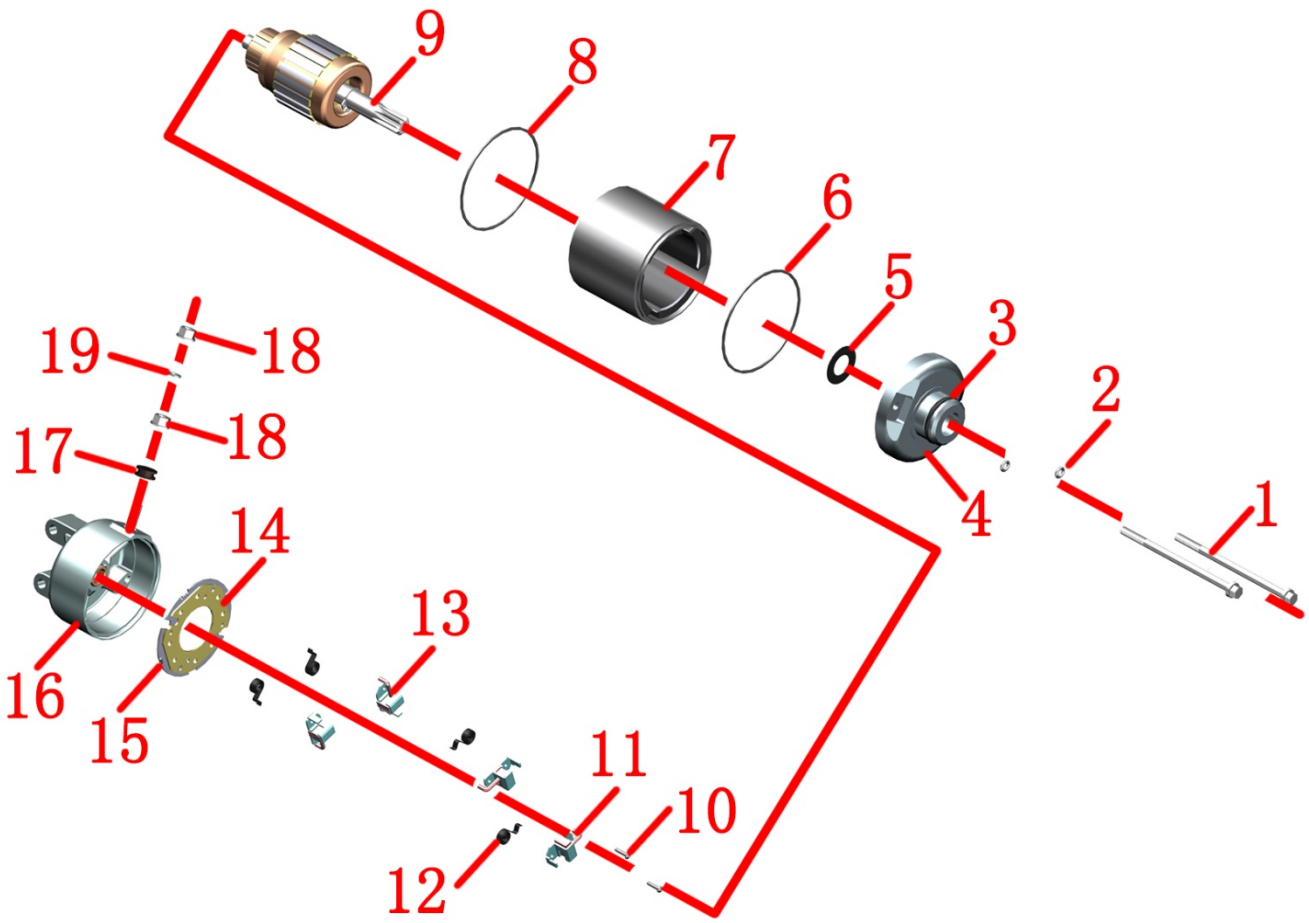

1-M6×90 bolt×2 2-O ring×2 3-O ring 4-starter motor front cover 5-gasket 6-rectangular sealing ring 7-starter motor outer shell 8-rectangular sealing ring 9-electric pestle 10-screw ×2 11-negative brush ×2 12-worm spring ×4 13-positive brush ×2 14-brush rack 15-brush holder insulating gasket 16-starting motor back cover 17-insulating pad 18-nut×2 19-gasket

Examination

Starter motor front cover：

Check whether the oil seal of the front cover is worn and damaged;

Also check whether the outer ring fits tightly with the front cover.



Motor back cover：

Check whether the bushing of the back cover is worn or damaged;

Check whether the brush is damaged, measure the length of the brush, and use the limit11.5mm（0.45in）.

Check the connectivity of the back cover as follows：

The positive brush is connected to the end of the cable; the cable end is not connected to the back cover; the negative brush is connected to the back cover.



Denki：

Clean the metal scraps on the electric screw, and check whether the commutator bar is discolored;

Check that there should be a gap between the commutator and the crankshaft.

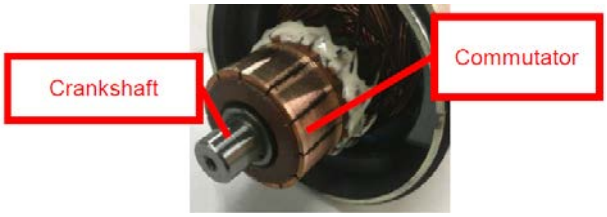

Check the starting relay

1. Operation check

a.Remove the seat and rear storage box first, find the starting relay connector on the right inner side of the frame, and untie the tie.

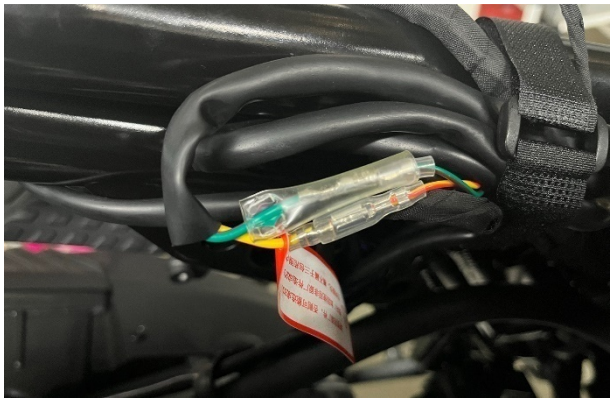

b.Unlock the motorcycle, turn the engine shutoff switch to "", retract the side bracket, pinch the brake handle and press the start button. You should hear the sound of the start relay picking up, otherwise you should check the start circuit.

2. Check the relay coil

2.1 Input line

Adjust the multimeter to the DC voltage 20V file (if it is an automatic range multimeter, adjust it to the DC voltage file). Insert the red test lead into the rubber sleeve of the yellow/red wire and stick it tightly to the terminal.

Unlock the motorcycle, turn the engine off switch to "", and the black test lead can select any bolt connected to the frame nearby. When the brake handle is pressed and the start button is pressed, the voltage measured between the yellow/red wire and the ground wire should be the battery voltage.



2.2 Ground wire

The motorcycle is powered off and locked. Set the multimeter to the buzzer position, connect one test lead to the green/red wire, and one to any bolt connected to the frame. It should be conductive when the start button is pressed.

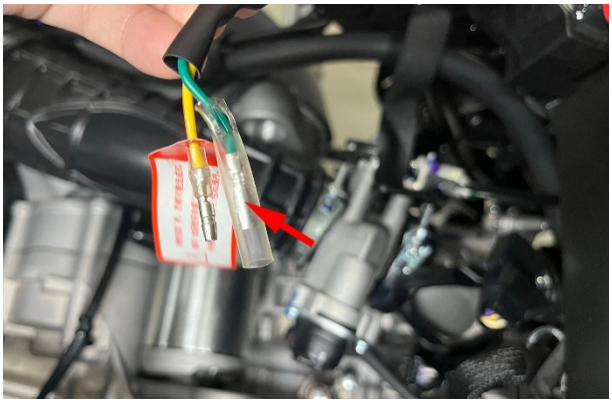

3. Check the starting relay

Use a thicker wire to directly connect the 12V battery to the relay. Use the buzzer file of the multimeter to measure the green/red and yellow-red wires, which should be conductive, and should be disconnected after disconnecting the battery.

4. Disassembly and assembly of the starting relay

Open the black protective cap of the starting relay and use a 10# sleeve to remove the self-contained M6 nut, take out the wire and screw it back to the nut to prevent loss; use the same method to remove the other end. Unplug the yellow/red and green/red wires.



When reinstalling, ensure that the yellow/red and green/red wires of the relay correspond to the main wiring color codes. The nuts do not need to be differentiated. After tightening the nuts, make sure to cover the protective cap securely.

6.Oil supply system

Know Before Service

1.Bending or twisting the control cables can affect smooth operation and may cause short circuits or open circuits, leading to vehicle loss of control.

2.Work should be conducted in a spacious, well-ventilated area. Smoking, making mobile phone calls, or any actions that may cause sparks are prohibited in the work area.

3.Before operating, the high-pressure fuel line should be depressurized. The procedure is as follows: disconnect the fuel pump connector, start the engine, and allow it to idle until the engine stalls. Turn the engine kill switch to " " and disconnect the power to the vehicle, then lock the vehicle.

4.After removing the throttle cable, do not manually open the throttle body fully, as this may cause abnormal idle behavior.

5.After removing the throttle body, use masking tape or a clean, lint-free cloth to block the intake port to prevent foreign objects from falling into the engine.

6.Do not damage or tamper with the throttle body, as this may cause abnormal throttle operation.

7.After removing the throttle body, ensure that no dust or foreign objects enter the throttle bore or air passages. If necessary, use dry compressed air to clean.

8.Do not loosen or tighten any bolts or nuts on the throttle body that have been marked with a marker pen, as this may cause abnormal throttle operation and idle control issues.

9.Carburetor cleaners should not be used.

10.Throttle body components not specified in this manual should not be disassembled.

11.If there is a " " symbol on the right side of a step, you can click it to quickly jump to the corresponding step.

CAUTION

●After reinstalling the battery or EFI parts, the EFI system needs to be reset. For specific operation, please refer to the precautions in the driver's manual or the throttle valve body section of this manual.

Tank disassembly

●The motorcycle must be parked on a level, stable ground or lifting platform.

●It is necessary to wait for the engine to cool down completely before operation.

●Wear waterproof gloves when draining the coolant to prevent it from getting on your skin.

●The dismantling site must be ventilated and pay attention to fire prevention. The details are described in the previous section and will not be repeated here.

●Use the suction pump first or wait until the fuel in the tank is about to run out before dismantling.

●Pay attention to protect the oil outlet of the oil pump, and only pull out the high-pressure oil pipe axially. Be careful not to force the port radially or press out.

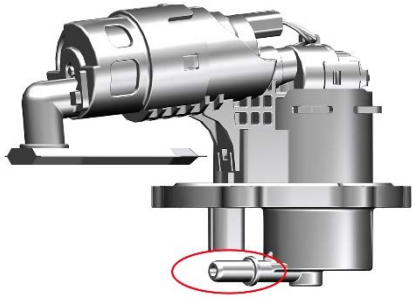

1.Disassemble the tank assembly

a.Follow the steps in the pre-service instructions to drain the fuel in the high-pressure tubing first.

b.Refer to the steps for replacing the fuel pipe in the chapter "Maintenance" and the steps in "Disassembly and Assembly of Covers", and remove the bottom of the surround, the air deflector of the cooling fan, the seat cushion, the storage box, the windshield, the front panel assembly, the front storage box panel assembly, the rear armrest assembly, the rear apron, the side cover, and the pedal assembly.



c.Refer to the steps of disassembling the engine, and unplug the wiring harness plug, oil pipe interface and water pipe interface on the engine. Remove the plug from the rear wheel speed sensor. Refer to the "Throttle Cable" procedure to remove the throttle cable from the turntable. Park the motorcycle in a flat and wide area, turn the steering bar to the right, place the stool at the appropriate height under the arrow, and tiptoe the rear wheels of the motorcycle off the ground.

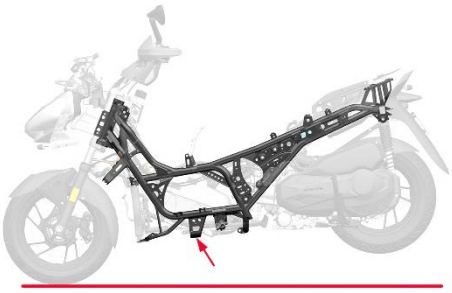

d.Fix the nut (1) with a 17# wrench, and loosen the bolt (2) with a 14# sleeve. Remove the 4 nuts (1) in turn, and do not remove the bolts (2) for the time being.

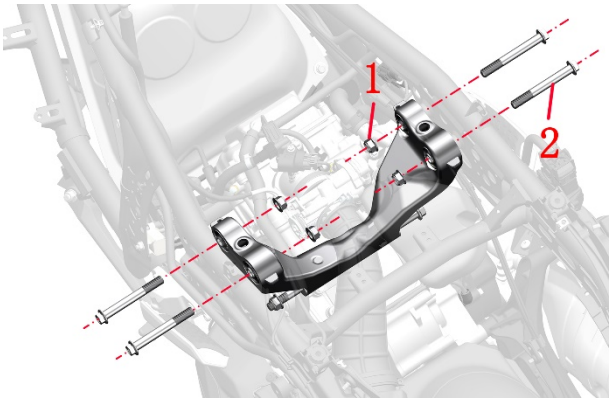

e.Use a 14# wrench to fix the nut (3), and use a 14# socket + ratchet wrench to loosen the bolt (4). Remove the 2 nuts (3). One person holds the rear wheel, and the other person removes the two bolts (4) on the rear shock absorber, and the rear wheel can be gently placed on the ground after removing the bolts. One person holds the engine up, and the other removes the 4 bolts from the frame (2). After removing the bolts, the engine can be gently placed on the ground.

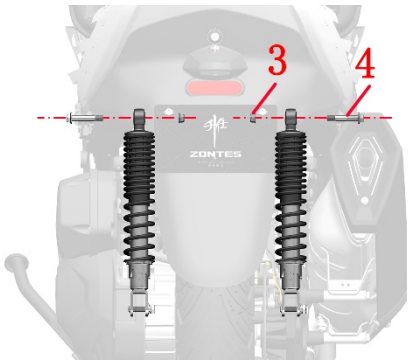

f.Press the anti-release buckle of the oil level sensor plug (1) and unplug the plug (1). Remove the oil pump plug (2) in the same way. Press the anti-release buckle of the high-pressure oil pipe (11) at the end of the oil pump, and pull out the high-pressure oil pipe (5) along the axis of the oil pump outlet.

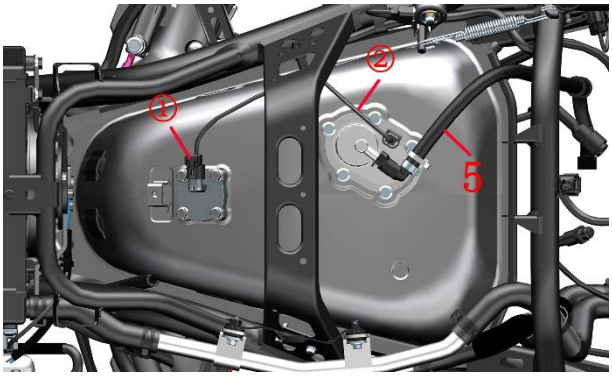

g.Use pliers to remove the clamp on the canister that connects to the oil and gas sensor and remove the hose.



h.Use a ratchet wrench + 10# socket to remove 4 M6×16 bolts (6), and remove the springpad (7) and washer (8).

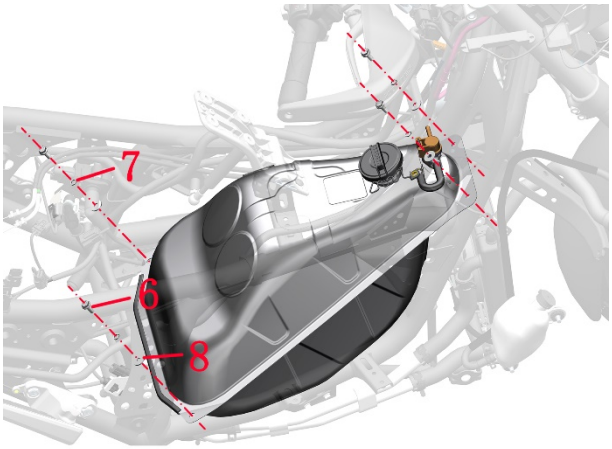

i.Lift the tank assembly slightly from the tail end, move it back until the tank filler passes safely under the frame, and remove the tank assembly upwards.

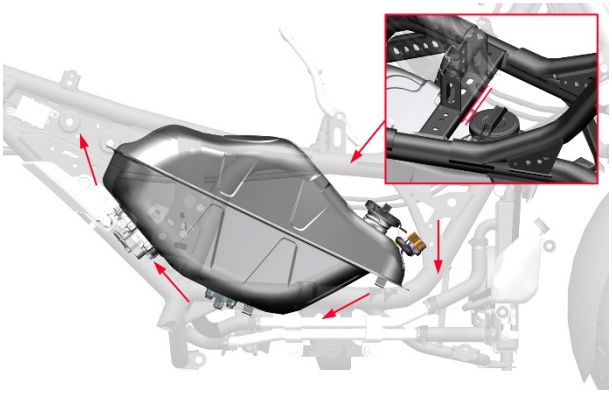

2.Dismantle the fuel pump

Flip the tank assembly over so that the fuel pump is positioned securely facing up. You can flip the small wooden table to ground the table and put the fuel tank assembly on it.Loosen 5 M6×20 bolts (1) diagonally with a 10# sleeve, grab the high-pressure tubing bracket (2) and remove the bolt (1) completely and remove the oil pump (3).

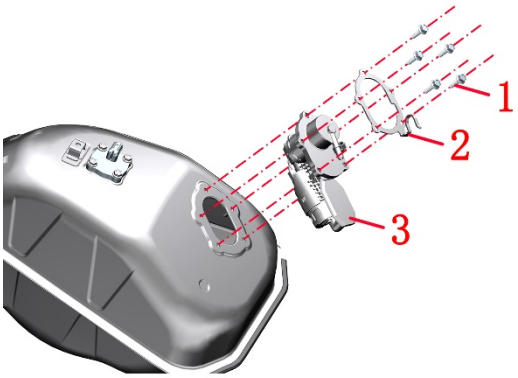

When reassembling, it is necessary to pre-tighten diagonally and then tighten 5 bolts (1), otherwise the sealing ring of the fuel pump (3) is compressed unevenly, which is easy to lead to leakage and cause potential safety hazards.
Remark:

The fuel pump is a precision component, which needs to be assembled in a dust-free workshop and requires strict testing, so it is forbidden to disassemble it by yourself. Therefore, the fuel pump decomposition process is not explained here.

3.Remove the oil level sensor

Remove 4 M6×16 bolts (1) with a 10# sleeve and pull the sensor (2) outward. Note that it should not be forcibly pulled, so as not to cause the deformation of the float connecting rod and cause the deviation of the oil quantity display to become larger.



When reassembling, it is necessary to pre-tighten diagonally and then tighten 4 bolts, otherwise the sealing rubber ring of the oil level sensor is compressed unevenly, which will easily lead to leakage and cause potential safety hazards.

4.Dismantle the external parts of the tank assembly

a.The battery rubber pad (1) is pasted on the fuel tank shell and is difficult to remove. If you need to remove it, you can remove it with a heat gun after heating it slightly, or use a self-adhesive cleaner to remove it. Press the fuel tank cap (2) and rotate counterclockwise to remove.

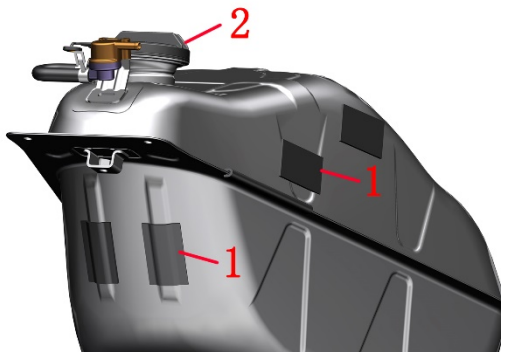

b.Loosen the two clamps on the snorkel pipe (4) of the fuel tank with pliers, and remove the snorkel (4) from the fuel tank (6) and the external oil-air separator (3). Remove the external oil-gas separator (3) directly. Remove the strip directly (5).

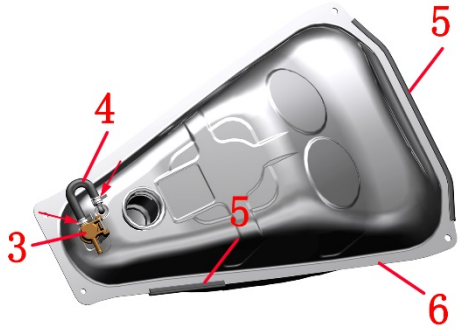

Examine

1.Fuel pressure test

The test methods are detailed in the Fuel Pumps section of the Maintenance chapter.

2.Fuel pump check

Unlock the motorcycle, hit the engine stop switch and you should be able to hear the sound of the fuel pump running. If you don't hear the sound of the fuel pump running, turn off the ignition and power first.

Refer to the steps in the chapter "Maintenance" to replace the high-pressure oil pipe, first remove the surrounding bottom plate. Follow the previous tank removal steps to remove the fuel pump plug.

Use a multimeter to measure the voltage at the cable end of the fuel pump plug, unlock the motorcycle, and the fuel pump accumulates pressure for about 5 seconds when the engine stop switch hits "", during which the battery voltage should be measured.

If the engine can be measured until the battery voltage can be measured until the pressure is accumulated, the oil pump relay needs to be checked to see if it is normal, and if the relay is normal, the fuel pump is abnormal and needs to be replaced.

3.Oil level sensor

Use a multimeter in resistance mode to measure the resistance. The lowest reading (empty tank) should be between 287Ω and 313Ω, and the highest reading (full tank) should be between 27Ω and 79Ω.

Move the float lever and ensure smooth rotation without any sticking, and check that the contact points are in good condition.

Inspect the float for any visible damage.

7.Cooling system

Know Before Service

1.Please refer to the radiator section of the "Maintenance" chapter of this manual for the corresponding precautions for the coolant (antifreeze).

2.Check the cooling water pipe; check the height of the cooling liquid, adding and discharging the cooling liquid have been described in detail in the radiator section of the "Maintenance" chapter, and this chapter will not be repeated.

Tool:

			
Hoop pliers	multimeter	Air source with adjustable air pressure	Homemade head*

* A soft rubber plug can be used to seal, or a hose can be folded and tied with a rope or wire to act as a stopper for testing the water tank filler cap seal. A section of water pipe with an inner diameter of 16mm can be cut, with one end fitted with an appropriate air hose connector and hose clamp to securely assemble for testing the seal of the water tank filler and both the main and auxiliary water tanks.

3.If there is a "  " symbol on the right side of the step, you can click to quickly jump to the corresponding step.

WARNING

●When the engine is not completely cooled, opening the tank lid may cause coolant to eject and cause burns. Be sure to wait for the tank and engine to cool down before opening the tank cover.

Troubleshooting

1.Engine temperature is too high:

a.The coolant temperature of the meter is abnormal or the water temperature sensor is abnormal;

b.Thermostat abnormality;

c.Insufficient coolant;

d.Blockage of radiators, water pipes, and water tanks;

e.There is air entering the cooling system;

f.Failure of the cooling fan;

g.Cooling fan relay failure (see EFI Relays section of the EFI Systems chapter)

2.Engine temperature too low:

a.The coolant temperature of the meter is abnormal or the water temperature sensor is abnormal;

b.Thermostat abnormality;

c.Cooling fan relay failure (see EFI Relays section of the EFI Systems chapter).

3.Coolant leakage

a.Failure of the water pump seal;

b.O-rings are damaged or deteriorated;

c.Broken radiator cover;

d.Broken or aging gaskets fail;

e.ruptured water pipes;

Coolant system distribution map

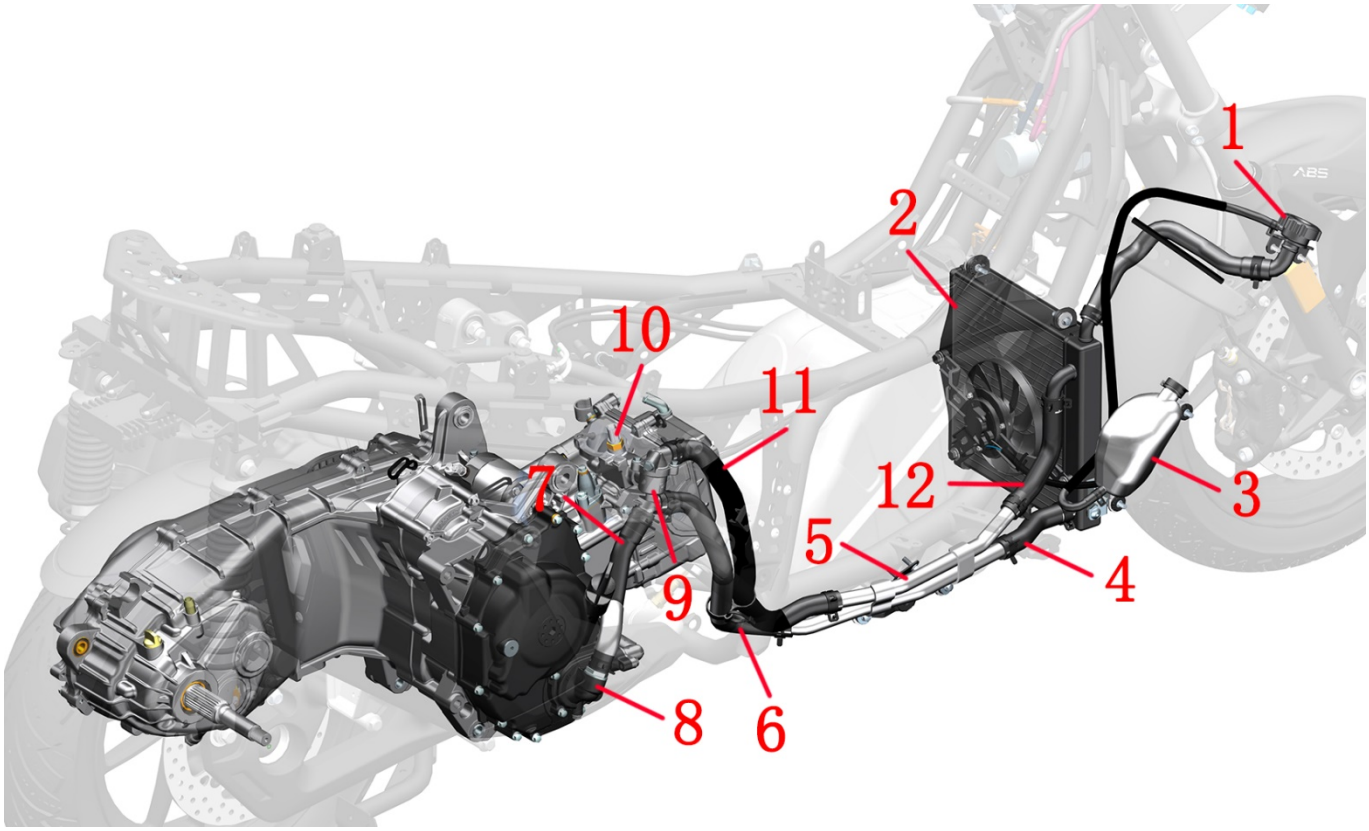

1-Main tank filler 2-Main water tank 3-Auxiliary tank 4-Main tank outlet pipe 5-Aluminum water pipes 6-Engine water pipes 7-The water pump covers the inlet pipe 8-Water pump cover assembly 9-Thermostat assembly 10-Water and oil share sensors 11-Thermostat outlet pipe 12-Main tank inlet pipe

Schematic diagram of coolant flow

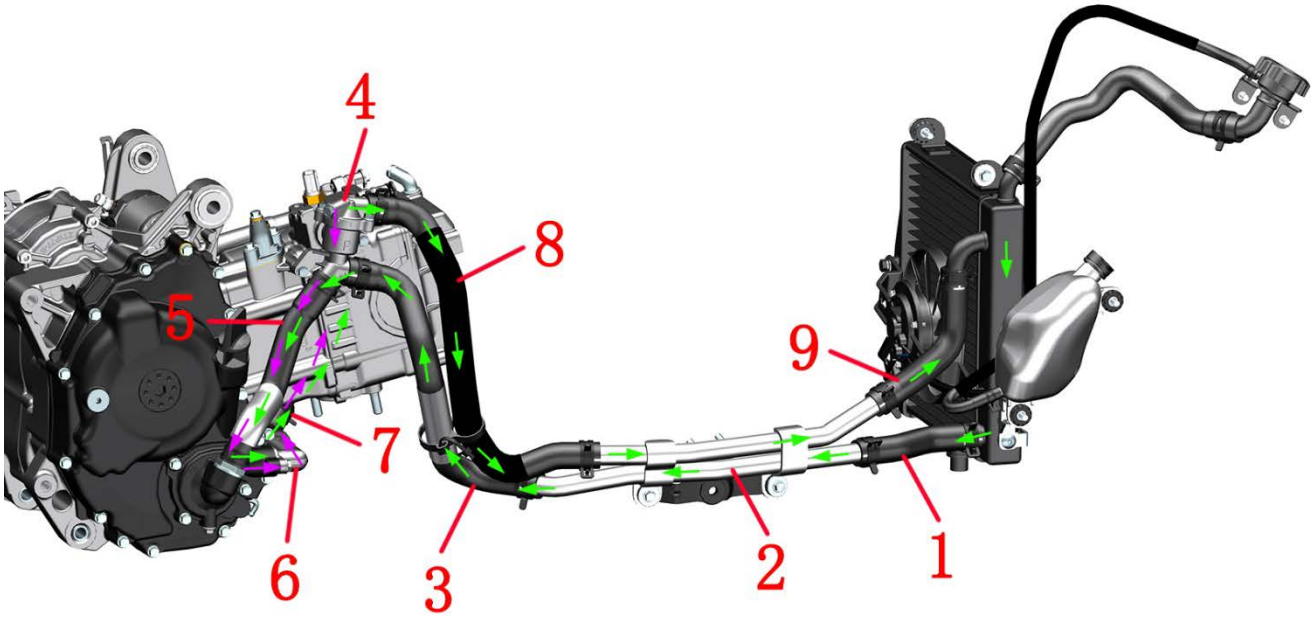

1-Main tank outlet pipe 2-Aluminum water pipes 3-Engine water pipes 4-Thermostats 5-The water pump covers the inlet pipe 6-Water pump cover outlet pipe joint 7-The water pump covers the outlet pipe 8-Thermostat outlet pipe 9-Main tank inlet pipe

Cooling system:

Small loops (indicated by purple arrows):

Water pump → water pump cover outlet pipe joint→ water pump cover outlet pipe → cylinder → thermostat → pump cover inlet pipe

Large loop (indicated by green arrows):

Water pump → water pump cover outlet pipe joint→ water pump cover outlet pipe → cylinder→ thermostat→ thermostat outlet pipe→ aluminum water pipe→ main water tank inlet pipe→ main water tank → main water tank

Outlet pipe→ aluminum water pipe→ engine water pipe→ thermostat → water pump cover inlet pipe

Cooling system disassembly

Note:

●Before disassembly, refer to the coolant discharge step in the radiator section of the "Maintenance" chapter, and drain all the coolant first.

●During the disassembly process, wear waterproof gloves, protective glasses and other protective measures, and avoid the coolant from touching the skin.

●It is important to wait until the engine, radiator, and muffler have cooled down completely before dismantling the operation.

Coolant system clamp/clamp distribution

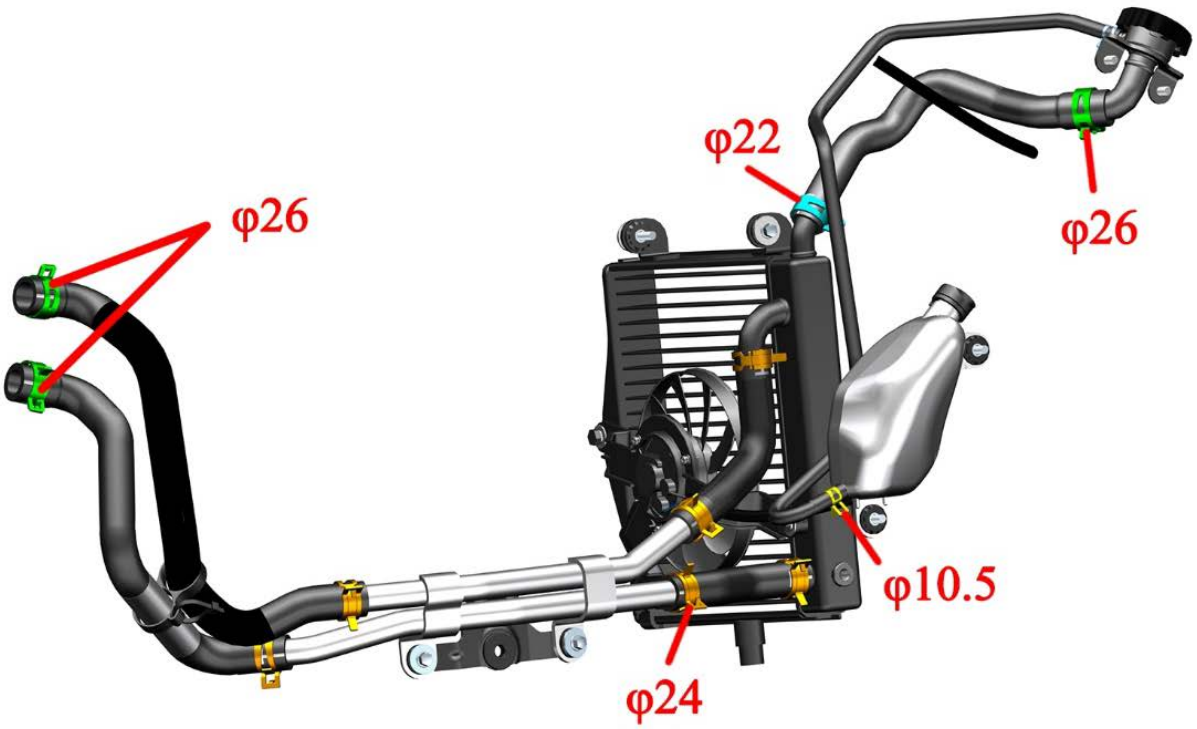

Thermostat components and small cycles

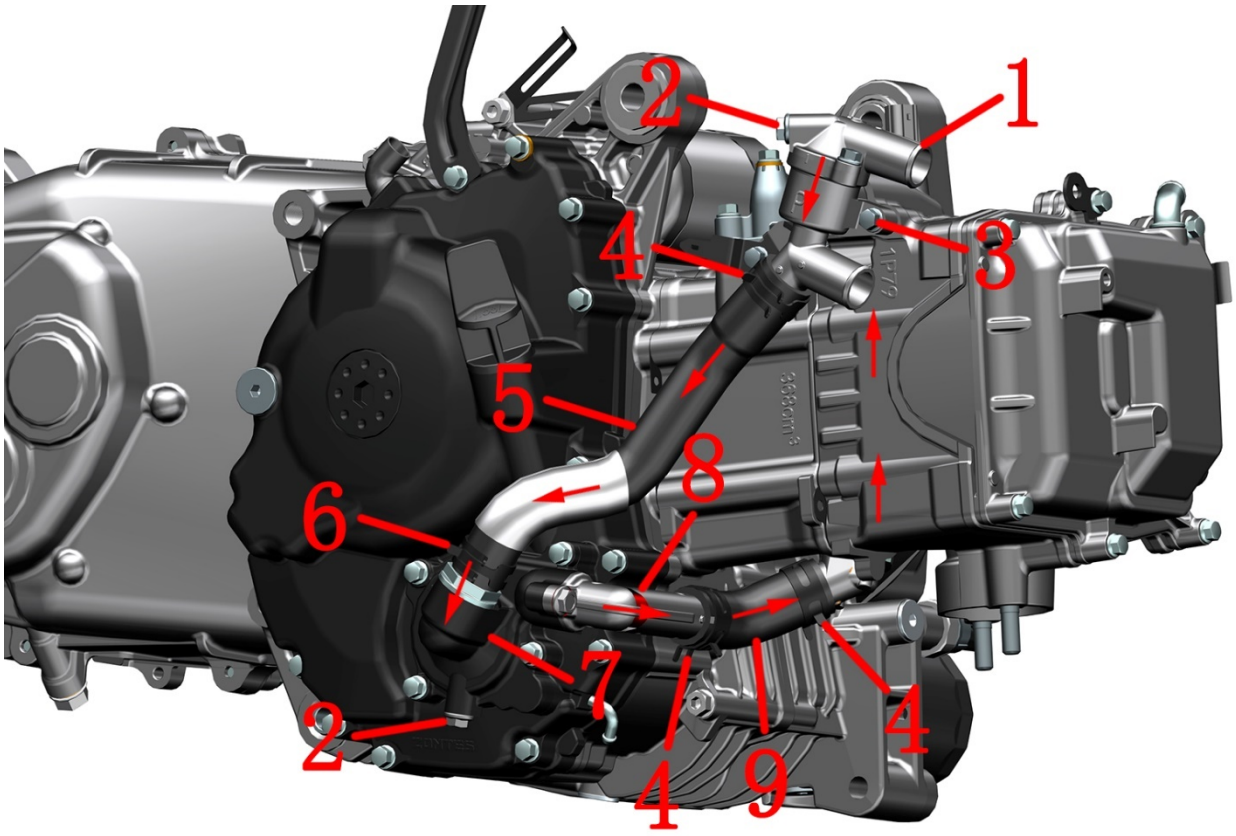

1-Thermostat assembly-M6×12 bolt*2 3- M6×22bolt*2 4-Water pipe hoop(ϕ26)*3 5-Water pump cover inlet pipe 6-Water pipe clamp(ϕ24) 7-Water pump cover assembly 8-Water pump cover outlet pipe joint 9-Water pump cover outlet pipe

Note： The bolt (2) at the thermostat is the exhaust bolt, and the (2) at the water pump cover is the coolant bolt. Both places have ϕ5.6×ϕ1 O-rings, which need to be replaced once disassembled.

a.Use hoop pliers to remove the hoop (4) and hoop (6) respectively, and separate the water pipes (5) and (9). Remove the clamp from the water pipe.

b.Remove 2 bolts (3) with 8# sleeve, remove the thermostat assembly (1), and remove the 16.5×1.95 O-ring (10) from the thermostat assembly. Once the O ring (10) is disassembled, it needs to be replaced.

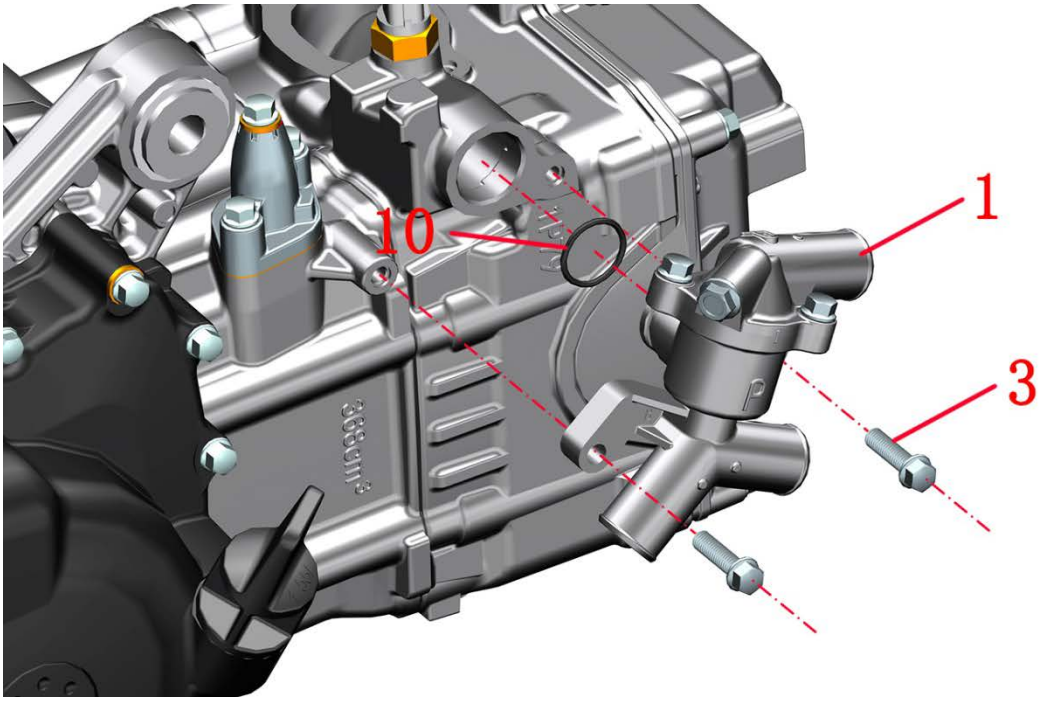

The joint surface should be cleaned before reassembly, and it should be noted that the O-ring should not be missed and

should be properly assembled in place. The clamp should be snapped into the inside of the boss to prevent it from loosening. Bolt (3) torque: 12±1.5 N.m (1.2±0.2 kgf.m, 9±1 lbf.ft).

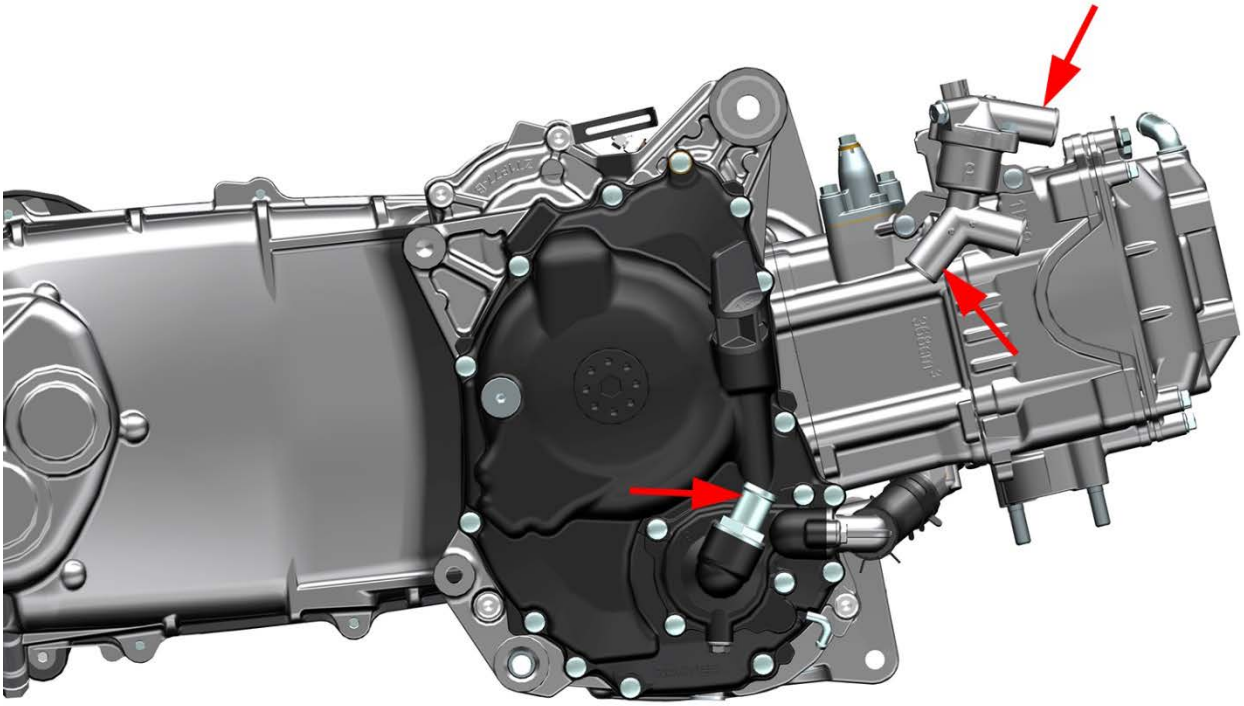

Cooling system accessories

Note:

●A dedicated venting tool (gas pressure regulator, air gun, sealing tube) is required to perform the test.

●After the water submersion test, promptly wipe off any water stains or use a blow gun to dry the parts. When using the blow gun to dry the main and auxiliary water tanks, be sure to control the air pressure and avoid directing it too close to the cooling fins to prevent damage or deformation.

●For air-tightness testing, unless otherwise specified, compressed air at 160kPa (1.63 kgf/cm², 23.2 psi) should be used. Submerge the components in water and let them sit for 10 seconds. No bubbles should be visible; if bubbles appear, it indicates a leak and the part should be replaced.

●The cooling fins are allowed to have slight bending or deformation. However, if the bent area is too large, it could affect the cooling performance, and replacement is recommended. Minor deformation can be corrected with a small flathead screwdriver.

●Do not use a high-pressure water jet or high-pressure air to directly clean or blow the cooling fins of the main and auxiliary water tanks.

●Before performing further testing, always check the exterior for any signs of leakage. If there is slight leakage, attempt to repair it; otherwise, replacement is necessary.

1.Main water tank

Check whether the buffer adhesive is aged and cracked.

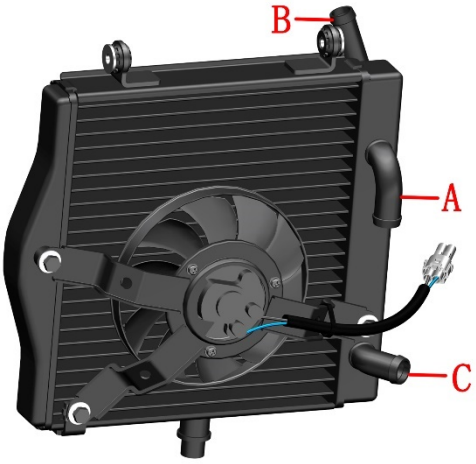

Plug the A and C ports with a homemade head, and vent from the B port to check the tightness. A gas with a pressure of 160kPa (1.63 Kgf/cm2, 23.2 psi) is introduced to ensure that there is no air leakage at the nozzle position, and the water tank is immersed in water and allowed to stand for 10s to observe whether there are bubbles.

Check whether the fan and grille are firmly assembled, and the rotating fan blades should be free of jamming. Check whether the buffer adhesive is aged and cracked. Check the fan cable for damage.

The fan plug is positive in blue and negative in black. Find a battery with sufficient power and connect the cable according to the positive and negative poles, and check whether the fan is pumping backwards.

Compressed air with low air pressure can be blown to the tank from the back to remove foreign matter from the surface. Or use a water gun with a lower pressure water gun to spray the heat sink at a distance to clean the surface of foreign objects.

2.Water tank filling port

Note：

●Specialized ventilation fixtures (gas pressure reducing valves, air guns, sealing tubes) are required for testing.



●After the water soaking inspection is completed, the water stains should be wiped clean in time.

2.1Overall tightness check

Seal the small tube and ventilate the large tube for air tightness check. A gas with a pressure of 160kPa (1.63 Kgf/cm2, 23.2 psi) is introduced to ensure that there is no air leakage at the nozzle position, and the water filling port is put into the water and let stand for 10s to observe whether there are bubbles.

2.2Pressure relief valve inspection

100kPa (1.02 kgf/cm2, 14.5 psi) of compressed air is introduced into the large tube, the water filling port is put into the water and let stand for 10s, the small tube should be free of bubbles, and the compressed air is raised to 110kPa (1.12 Kgf/cm2, 16 psi).

3.Auxiliary tank



Check whether the plastic cover is aged and cracked, and if so, it needs to be replaced. If the appearance is good, the air tightness inspection will be carried out.Seal the two small water outlets, and open the black plastic cover of the water tank for air tightness inspection.

Continue to block the small water outlet, pour water into the auxiliary water tank and turn the auxiliary water tank upside down, and observe whether the rubber cover of the water tank is seeping, if there is seepage, it is unqualified. After the tightness check, pour out the water, remove the plug and let the auxiliary tank dry naturally or blow dry with a blow gun.

4.Water and oil share sensors

For details of sensor detection and disassembly methods, please refer to the section on fault diagnosis and elimination of EFI parts in the chapter "EFI System".

5.Thermostats

5.1 Examine

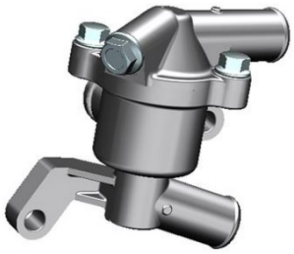

Inspect the appearance for damage and leakage.

Simple test method (test on the whole vehicle):

After the cold motorcycle starts, open the water inlet cover immediately, if the liquid level does not fluctuate, the thermostat is normal, otherwise it is abnormal. When the water temperature is lower than 70 °C (158 F), the thermostat should be in the valve closed state, and when the temperature is higher than the initial opening temperature, the expansion valve of the expansion cylinder will gradually open and the circulating coolant in the radiator will begin to flow.

After the temperature rises, check the inlet pipe of the small water tank, which should clearly feel the signs of water flow or feel the temperature of the pipe wall, otherwise the pump or water channel will be blocked.

If the temperature rises slower after the temperature reaches 80 °C (176 F), the thermostat is working properly. If the water temperature rises rapidly, when the internal pressure reaches a certain level, the boiling water suddenly overflows, indicating that the valve is stuck.



When there is stuck or the closure is not tight, it can be removed for cleaning or repair, otherwise it should be replaced.

5.2 Fault phenomenon

When the water temperature gauge indicates that the indication is high, the engine temperature is overheated, but the coolant temperature in the water tank is not high, it is not hot when touching the radiator with your hands, and the fan of the small water tank rotates normally. It indicates that the general circulation is blocked or blocked, and it can be preliminarily judged to be abnormal thermostat.

There are generally two types of thermostat abnormalities:

a.The main valve is closed for a long time, and the coolant circulates according to a small circulation route regardless of the water temperature, causing the engine to overheat.

b.The main valve is open for a long time, and the phenomenon is that the water temperature rises slowly when starting, especially in winter, the slow rise of the coolant temperature makes the engine not work at normal temperature, making the engine temperature too low.

5.3 Dismantle

Inspection method of thermostat assembly:

Plug two ports, enter 181 kPa (1.85 Kgf/cm2, 26.3 psi) of compressed air from the other port, and place it in water to observe if there are air bubbles, if any, leakage.

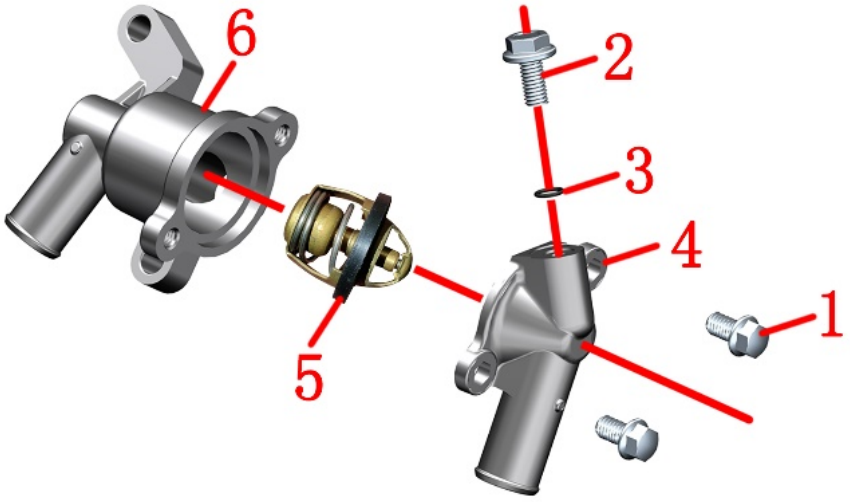

1-M6×10bolt*2 2-M6×12bolt 3-ϕ5.6×ϕ1 O-ring 4-upper housing of thermostat 5-thermostat core 6-thermostat lower housing

Thermostat core inspection:

Check the opening temperature, full opening temperature and lift of the main valve in the thermostatic heating equipment with

adjustable temperature, and replace one of the non-specified values. Or use a thermometer, water, heater, and container to test.

The initial opening temperature of the thermostat is 80~84°C (176~183 F), and the core movement is 0.1mm (0.004 in). The full open temperature is 95 °C (203 F) and the core movement is greater than 3.5 mm (0.14 in).

The simple test method is to put the core into a high-temperature container, pour boiling water and soak it for a period of time, take out the core with pliers, and observe whether the valve can be fully opened, which indicates that it is normal, and the valve should be able to reset until it is fully closed after the temperature gradually decreases.

The joint surface should be cleaned before re-matching, and the O-ring should not be omitted.

6. Water pipes

Check whether there are cracks, bulges and other undesirable phenomena on the surface of each water pipe. Plug one end of the hose, ventilate the other end and put the hose into the nozzle to check for air bubbles and replace them if so.

7.Inspect the water pump cover assembly

Check whether there is leakage in the two places indicated by the arrow, the bolt is a coolant bolt, if there is a leakage, the bolt needs to be removed and replaced with the O ring. If the leaking pipe of the right crankcase cover leaks, you can try to pull out the leaking pipe (because it is coated with sealant before pressing, it is more difficult to pull it out), clean it up and reapply the sealant and then put it back; Or simply replace the right crankcase cover assembly.

It is normal for a small amount of coolant to leak out of the leaking pipe, if there is continuous water leakage when the engine is running, it is abnormal, and the water pump cover needs to be removed to check whether the seal has failed.



8.Braking system

Know Before Service

1.The content of this chapter requires certain maintenance experience. It is recommended to have inspections or repairs conducted at maintenance units with proper qualifications.

2.Frequently inhaling dust produced by brake pads, regardless of its composition, may have certain health effects. Inhalation of dust particles should be avoided.

3.Never use a blowgun or brush to clean the brake assembly; instead, use a vacuum cleaner.

4.Avoid allowing brake fluid to drip onto painted cover parts or component surfaces. If accidentally spilled, immediately rinse with water.

5.When disassembling the front and rear disc brake master cylinders, ensure that the brake fluid in the reservoir is at a horizontal position. Never invert it to prevent air from entering, which can affect braking performance and, in severe cases, may lead to brake failure and personal injury.

6.The steps for replacing brake fluid and bleeding air are the same. Detailed steps can be found in the Brake Fluid section of the "Maintenance" chapter.

7.Oil contamination on brake pads or brake discs will reduce braking force. Contaminated brake pads should be replaced, and high-quality oil stain cleaner can be used to remove oil contamination from brake discs.

8.After removing the master cylinder reservoir cap, prevent dust, water, etc., from entering.

9.When brake fluid needs to be added after maintaining the brake system, only newly opened DOT4 brake fluid must be used. Mixing with other brake fluids is prohibited.

10.Switching or unplugging the ABS hydraulic control unit connector while the vehicle is powered on may damage the unit due to excessive voltage. The vehicle must be fully powered off before maintenance.

11.The hydraulic control unit is a precision component and must not be disassembled by non-professionals.

12.If there is a "  " symbol to the right of a step, you can click it to quickly jump to the corresponding step.

DANGER

●If brake fluid is swallowed by mistake, contact a poison control center or hospital immediately; In case of accidental contact with eyes, rinse with water and seek medical attention immediately.

●Keep brake fluid away from children and pets.

●The motorcycle must be parked on a level, stable ground or lifting platform.

WARNING

●Protective gloves/protective clothing/goggles/masks are required for braking system maintenance.

●It is strictly forbidden to flush the main pump directly with high-pressure water.

Troubleshooting

The brake handle is soft

a. Air enters the oil circuit of the braking system
b. Brake fluid leakage
c. Brake pads or discs are oily
d. Worn brake calipers or disc main cylinder piston seals
e. Worn brake pads or discs
f. Disc brake calipers are oil-stained
g. The disc brake main pump is oil-stained
h. The disc brake caliper slides inflexibly
i. Insufficient brake fluid
j. The brake oil circuit is not smooth
k. The brake disc is twisted and deformed
l. Disc brakes, calipers, pistons are worn and sticky
m. The disc brake main pump piston is worn and sticky

The brake handle is hard

a.The brake oil circuit is blocked
b.Disc brakes, calipers, pistons are worn and sticky
c.The disc brake main pump piston is worn and sticky
d.The disc brake caliper does not slide properly
e.Worn brake calipers or disc main cylinder piston seals

Disassemble the disc brake master cylinder and caliper

Note:

●Precautions and brake fluid hazards have already been explained and will not be repeated here.
●Disassemble the caliper, the main cylinder at the brake hose of the 2 pieces of copper pads must be replaced to avoid leakage. The surface of the disc brake oil pipe bolt and the copper gasket can be reused if there is no scratch.
●Disassembling the main pump and caliper requires a high level of hands-on ability and is recommended to be carried out by a professional person or maintenance unit. The replaced waste brake fluid should be handed over to a professional unit for recycling and proper disposal.
●The consequences caused by human disassembly or improper assembly are the responsibility of the operator, and are not within the scope of the three guarantees.
●It should be operated in a dry, dust-free or dust-free environment.

Disassembly of Front Disc Brake Master Cylinder

a.Remove it according to the steps for removing the steering handle in this manual "Fork Assembly".

b.First use the 12# sleeve to loosen the disc brake oil pipe bolt (1), pay attention to loosen it and then tighten it slightly without leakage, otherwise it will be more difficult to loosen the bolt in the future. the rubber plug of (1) rearview mirror with a flathead screwdriver, grasp the mirror rod of the right rearview mirror, and then remove the bolt (2) with 6# hexagon corner, and then remove the rearview mirror, pay attention to the ϕ8 elastic pad (3).

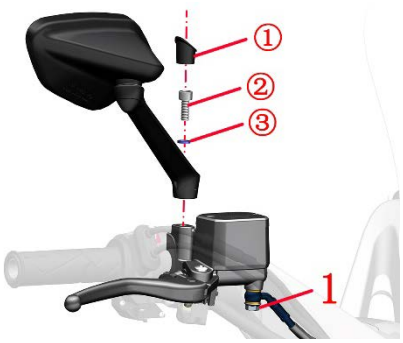

c.After grasping the front brake main pump, remove the 2 bolts (2) with 5# hexagon and remove the right switch.

24 models:

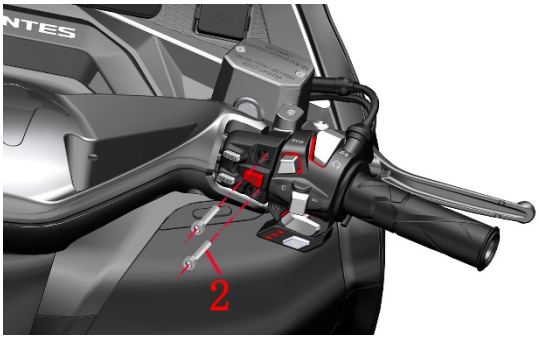

ETC：

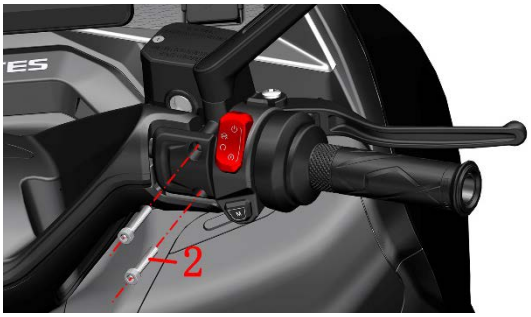

d.Tilt the front brake main cylinder so that the bolt (1) is facing up, remove the bolt (1) with a 12# sleeve after wearing waterproof gloves, remove the copper pad (3) and remove the FMC-HU oil pipe, and pour out the brake fluid in the main cylinder. Bolt (1) Standard torque: 32N.m (3.3 kgf.m, 24 lbf.ft).

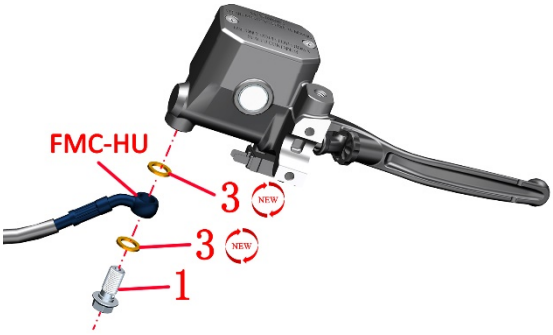

e.Remove the upper cover according to the steps of adding brake fluid, and remove the brake switch and brake handle according to the steps of removing the brake switch and brake handle.

f.Disassemble the front disc brake main pump.

The oil window assembly (a) should not be disassembled unless absolutely necessary; b denotes a ϕ0.5 oil hole; c denotes a ϕ3 pressure relief oil hole.

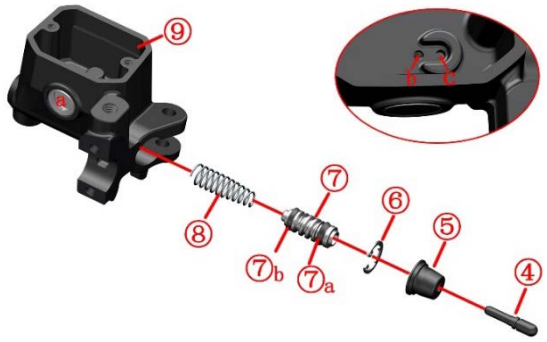

④Piston pushrods ⑤Dust cap ⑥Retaining rings ⑦Piston assembly（⑦a Outer seal ⑦b Inner seals） ⑧spring ⑨Main pump housing

The brake fluid can be cleaned with diesel or kerosene for further decomposition. If the oil hole is blocked, you can use a dust blow gun or a small needle-like tool to dredge it. After disassembly, use a soft-bristled brush that does not shed to clean all parts. It is not recommended to use a blow gun to dry, as an air compressor with poor drying or poor filtration effect may blow dust, water vapor or other debris into the main pump housing that has been cleaned through the blow gun; A vacuum cleaner with a high vacuum level can be used. Piston assemblies and springs can be fitted with a small amount of DOT4 brake fluid and should not be coated with other lubricating materials such as oil, grease or anti-rust oil.

g.Refer to the requirements of the front lubrication handle moving parts, apply an appropriate amount of high-vacuum silicone grease to the outer end of the handle bolt and piston assembly. Replace it according to the removal procedure, and follow the previous steps to add the newly opened brake fluid and perform the exhaust operation. Note that the copper pad (3) needs to be replaced with new parts to prevent leakage. After assembly, it is necessary to confirm that the brakes have been restored before driving the vehicle.

Disassemble the rear disc brake main pump

The rear disc brake main pump and the front disc brake main pump are mirror symmetrical, and can be disassembled according to the steps of disassembling the front disc brake main pump.

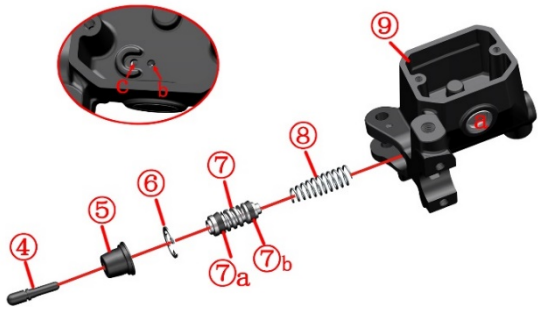

Disassemble the front disc brake caliper

a.First, use 14# to loosen the tubing bolts without leakage. Then use 8# hexagon to remove 2 M10×1.5×60 bolts (red circle), the standard torque of the bolt: 45~50N.m (4.6~5.1 kgf.m, 33~37 lbf.ft). Never operate the brake lever after removing the caliper.

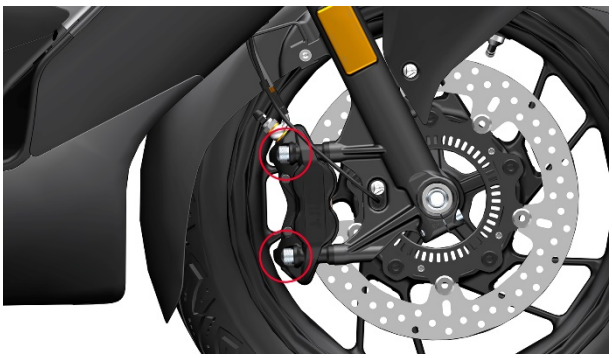

b.Place the oil pan under the front disc brake caliper. First uncover the rubber cap of the screw (1), put on waterproof gloves and remove the bolt (2) with an 8# torx wrench, remove the bolt (3) with a 14# torx wrench, and remove the two copper washers (4).

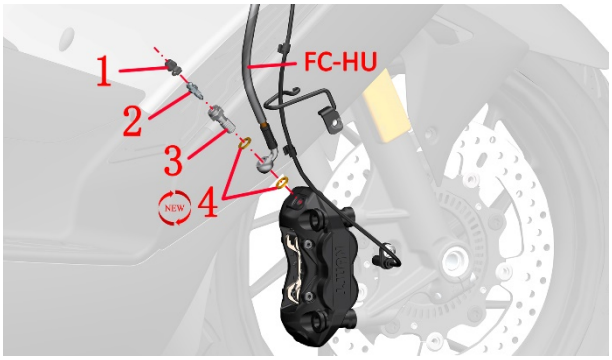

c.Remove the brake pads.

d.Disassemble the front disc brake caliper.

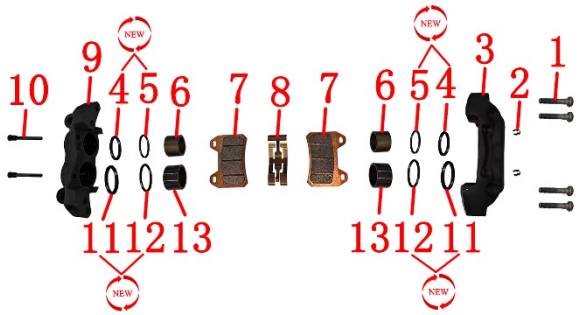

1-Bolt 2-Circlip 3-Caliper inner housing 4-ϕ30 oil seal 5-ϕ30 dust seal 6-ϕ30 piston 7-brake pad 8-brake pad spring 9-caliper outer housing 10-pin 11-ϕ34 oil seal 12-ϕ34 dust seal 13-ϕ34 piston

The piston can be blown out by blowing compressed air from the tubing bolt with a dust blowing gun. Pay attention to placing a towel or other soft material at the piston to prevent damage caused by collision between the piston and the caliper mounting plate; In addition, the dust blowing gun needs to be far away from the caliper body, which is easy to cause damage caused by the piston suddenly flying out when the distance is too close. Inspect the piston and caliper cylinders for scratches, damage, pits, etc. Check whether the pin is deformed.

Note：

●The two pins indicated by the arrows are coated with silicone grease.

●After the oil seal and dust seal are disassembled, they should be replaced with new parts, the oil seal and piston should be coated with DOT4 brake fluid before assembly, and the outer ring of the dust seal should be coated with silicone grease.

●Thread fastening glue applied to the threads of caliper pins, torque: 22N.m (2.2 kgf.m, 16 lbf.ft).

●Vent nozzle torque: 7~9N.m (0.7~0.9 kgf.m, 5~7 lbf.ft).

●The open end of the piston should be facing the caliper mounting plate, not reversed.

●If there is slight rust on the surface of the piston, it can be sanded off with 2000 mesh fine sandpaper.

e.Follow the removal steps to restore all parts and add a new DOT4 brake fluid as described in the steps for replacing the front disc brake fluid, and confirm that the brakes are restored before driving the vehicle.

Disassemble the rear disc brake caliper

a.Place the oil tray at the bottom of the caliper, loosen the bolt (1) with the 12# sleeve after wearing the waterproof gloves, remove the copper pad (2), and remove the RC-HU oil pipe. Follow the steps for adding the brake fluid of the rear disc brake main cylinder, remove the upper cover of the main cylinder, and accelerate the discharge of the brake fluid. Bolt (1) Standard torque: 32N.m (3.3 kgf.m, 24 lbf.ft).

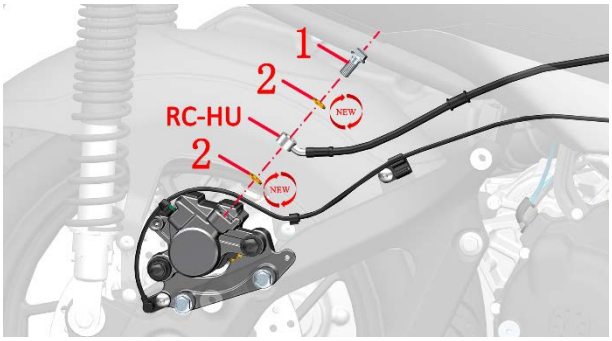

b.Remove the bolt (3) with a 10# or 14# sleeve, remove the bolt (4) with a torx wrench, and take out the wheel speed sensor (5). Standard torque of bolt (3): 24 N.m (2.4 kgf.m, 18 lbf.ft).

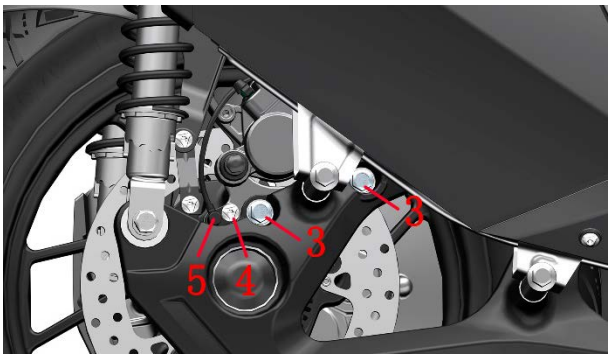

c.Remove the brake pads first.

d.Disassemble the rear disc brake caliper.

You can disassemble the rear disc brake caliper piston by referring to the steps in the previous chapter to disassemble the front disc brake caliper piston. Inspect the piston and caliper cylinders for scratches, damage, pits, etc. Check whether the pin is deformed. The areas that should be paid attention to in cleaning and assembly are described in detail and will not be repeated here.

Note：

●The pins and bushings indicated by the arrows are coated with silicone grease.

●After the oil seal and dust seal are disassembled, they should be replaced with new parts, the oil seal and piston should be coated with DOT4 brake fluid before assembly, and the outer ring of the dust seal should be coated with silicone grease.

●Thread fastening glue applied to the threads of caliper pins, torque: 27N.m (2.8 kgf.m, 20 lbf.ft).

●Vent nozzle torque: 7~9N.m (0.7~0.9 kgf.m, 5~7 lbf.ft).

●The open end of the piston should be facing the caliper mounting plate, not reversed.

●If there is slight rust on the surface of the piston, it can be sanded off with 2000 mesh fine sandpaper.

Wheel speed sensor and inductive ring gear clearance check

Note：

●The motorcycle needs to be parked on a stable lifting

platform or on level, level ground.

Lower the main bracket to park the motorcycle securely and let the rear wheels hang in the air.

Check whether the gap between the wheel speed sensor and the ABS induction ring gear is 0.4-1.2mm (0.02-0.05in).

If the clearance is not within the specified range, it is necessary to check whether the wheel speed sensor is damaged and whether the ABS induction ring gear is loose. The front wheels need to check whether the position of the sensor on the front disc brake caliper mounting plate is deformed, and the rear wheel should check whether the mounting position on the swingarm is deformed and whether the rear wheel nut is loose.

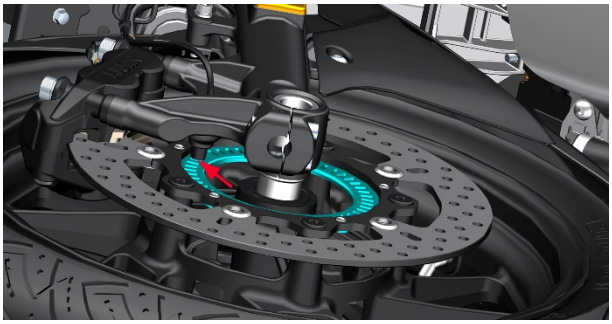

Front wheel

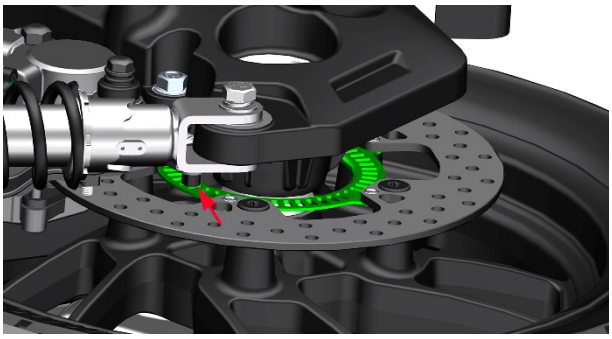

Rear wheels

ABS Troubleshooting

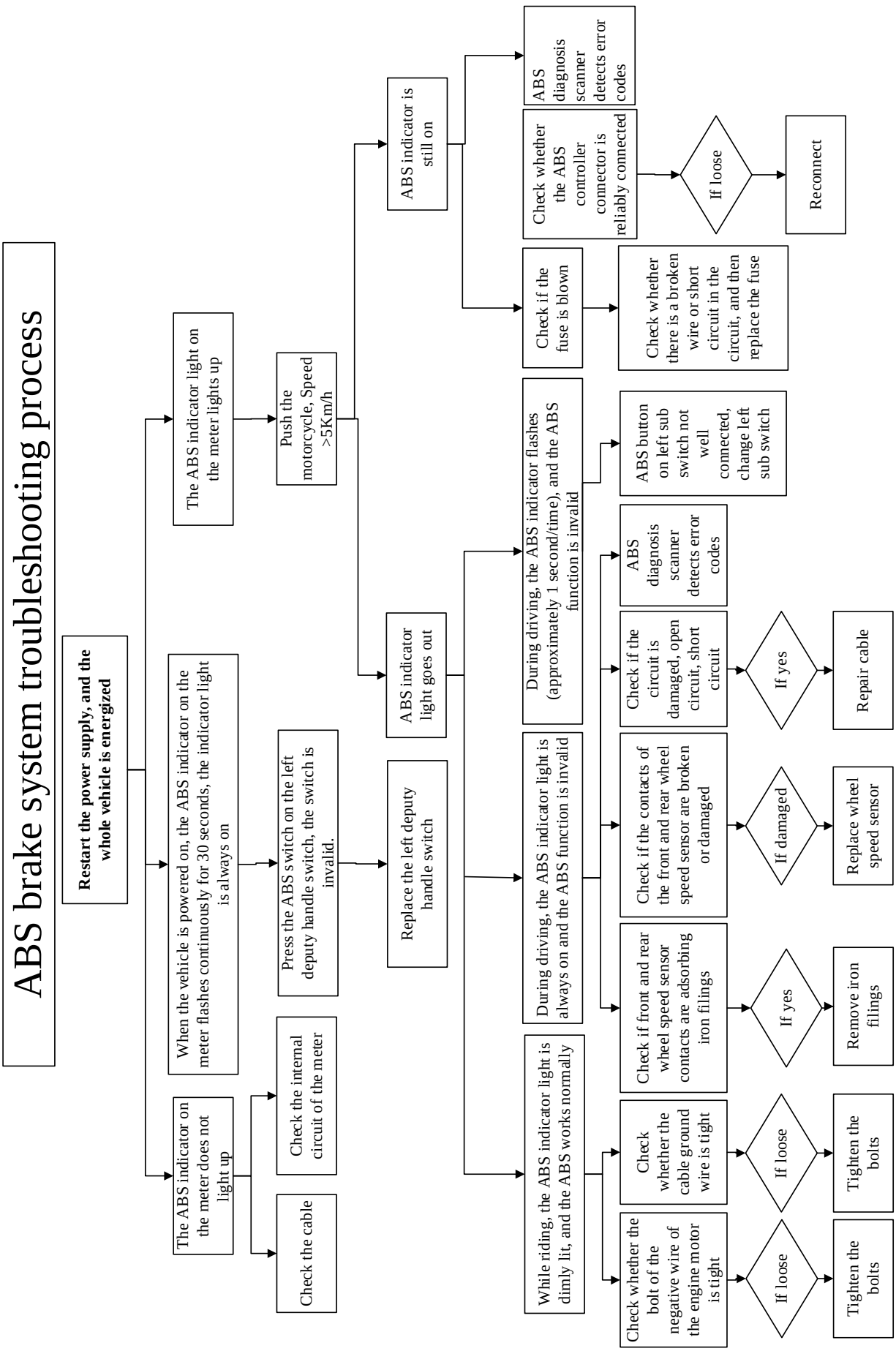

Fault diagnosis process using a handheld ABS diagnostic tool

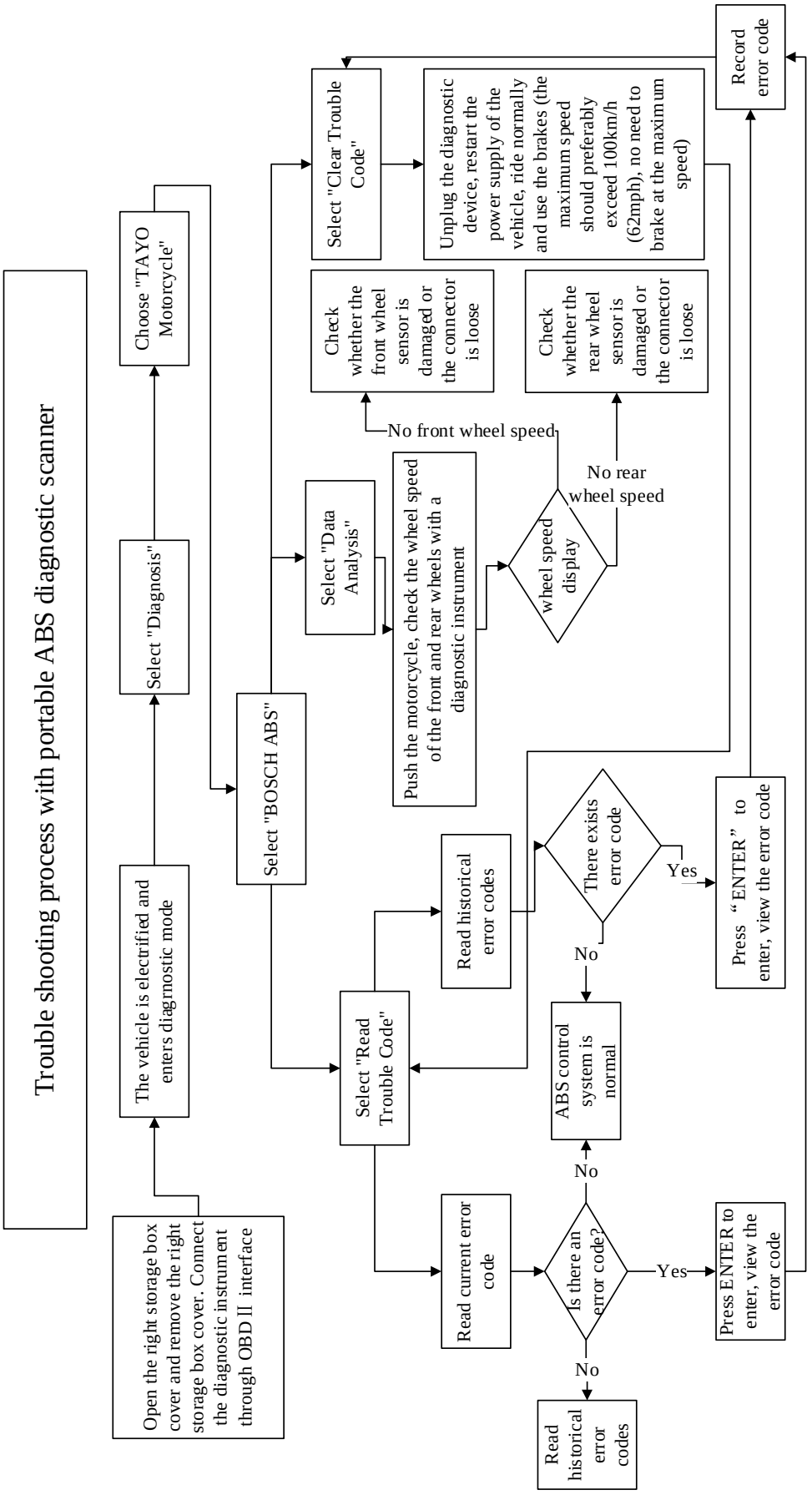

Error Code	Explanation
5043H	Front wheel speed sensor disconnected/ground short circuit/power supply short circuit
5042H	Front wheel speed sensor failure--unstable signal
5045H	Rear wheel speed sensor disconnected/ground short circuit/power supply short circuit
5044H	The rear wheel speed sensor is faulty--the signal is unstable
5025H	There is a deviation in front and rear wheel speeds
5052H	Power supply failure (low voltage)
5053H	Power supply failure
5223	EEPROM is out of range

Error Code	Explanation
5017H	Front wheel inlet valve (EV valve) failure
5018H	Front wheel drain valve (AV valve) failure
5013H	Rear wheel inlet valve (EV valve) failure
5014H	Rear wheel drain valve (AV valve) failure
5035H	Motor failure
5019H	Valve relay failure (relay that guarantees fail-safety)
5055H	ECU failure
5122H	EEPROM read failure

9 .Battery/charging system

Know Before Service

1.Waste batteries should be disposed of properly so as not to pollute the environment. It is recommended to hand over the waste battery to a professional recycling agency for recycling.

2.It is forbidden to use a charger that has not been tested to charge the battery.

3.When the battery is reinstalled, the power is suddenly cut off during driving, the idle speed is abnormal, and the insurance is replugged and unplugged. Here's how:

a.Unlock the motorcycle and support the main bracket;

b.Pinch the brakes and start the vehicle;

c.Pull the engine speed to more than 3000 rpm;

d.After releasing the accelerator, turn off the ignition switch and lock the motorcycle;

e.Wait for 5 seconds and unlock the motorcycle again to complete the EFI system reset.

4.Before disassembling the battery, the motorcycle should be de-energized before proceeding.

5.Before troubleshooting the charging system, check whether the battery is in normal use and maintenance. Check with the owner to see if you regularly use high-powered electrical appliances, or if you don't drive your motorcycle for a long time, or if you turn on the lights for a long time without starting the vehicle.

6.If there is a “” symbol on the right side of the step, you can click to quickly jump to the corresponding step.



●When the engine cannot be started, never press the electric start button frequently. Frequent operation can lead to overheating or damage to the starter motor, flooding of the cylinder, battery feeding, etc.

●When the motorcycle is powered on, connecting or unplugging may cause damage to some electrical components.

●Overcharging or undercharging, or discharging for a long time can cause damage to the battery.

Troubleshooting

Troubleshooting process for battery damage or attenuation

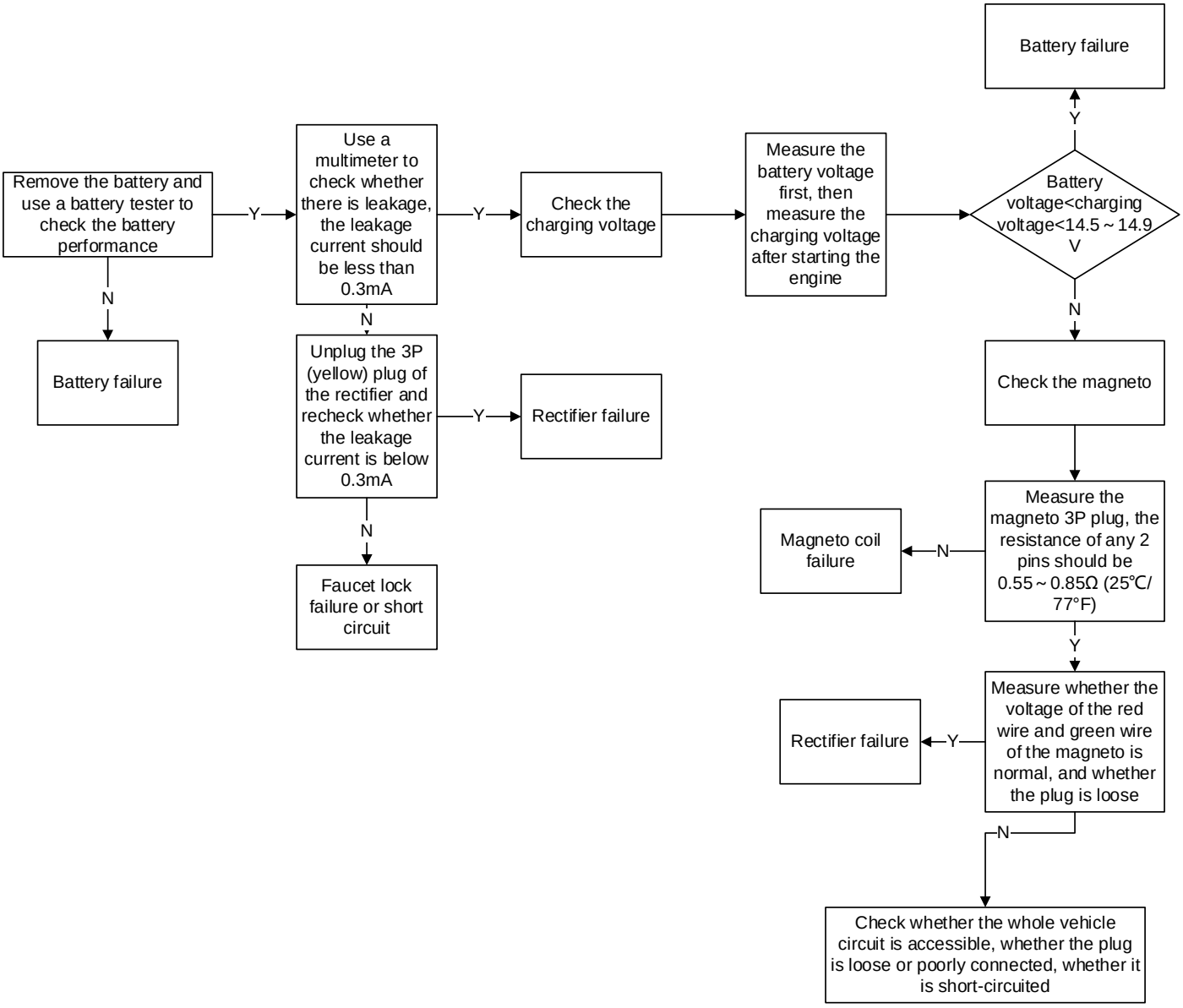

Charging System Layout Diagram

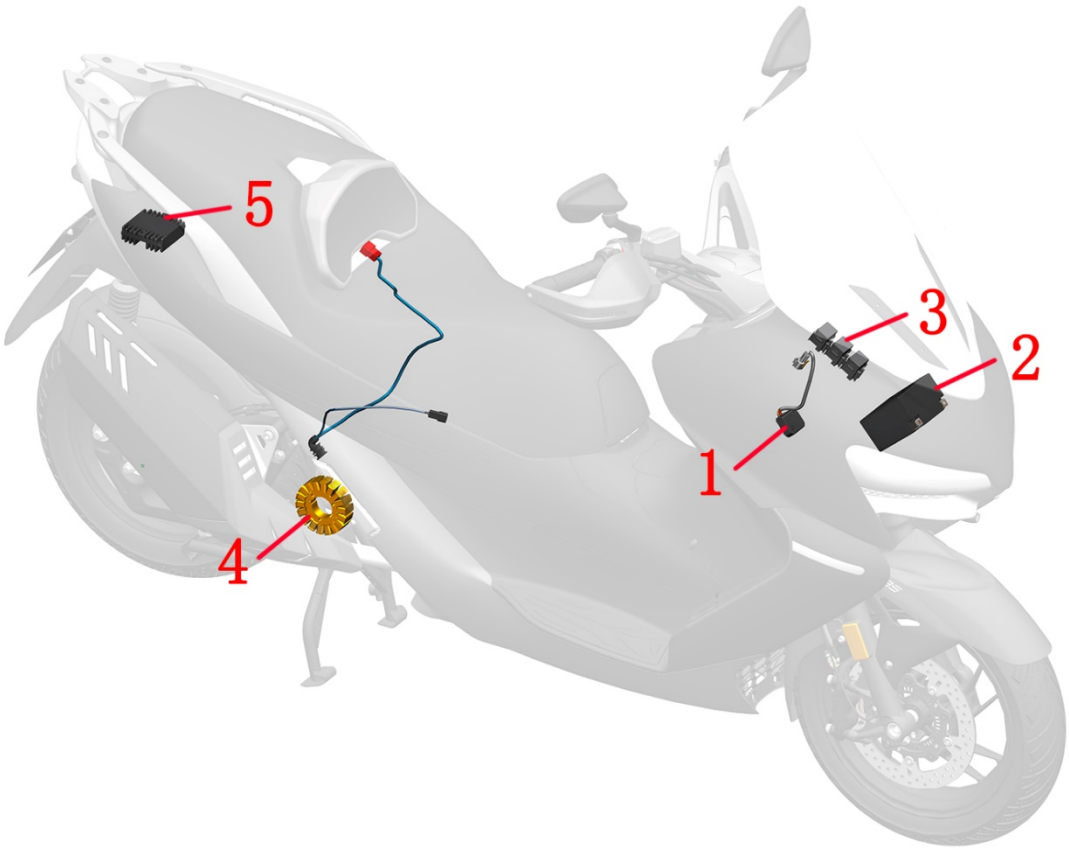

1-Charging port (PKE) 2-Battery, 3-Main fuse (25A), 4-Magneto 5-Rectifier

Electrical Schematic Diagram

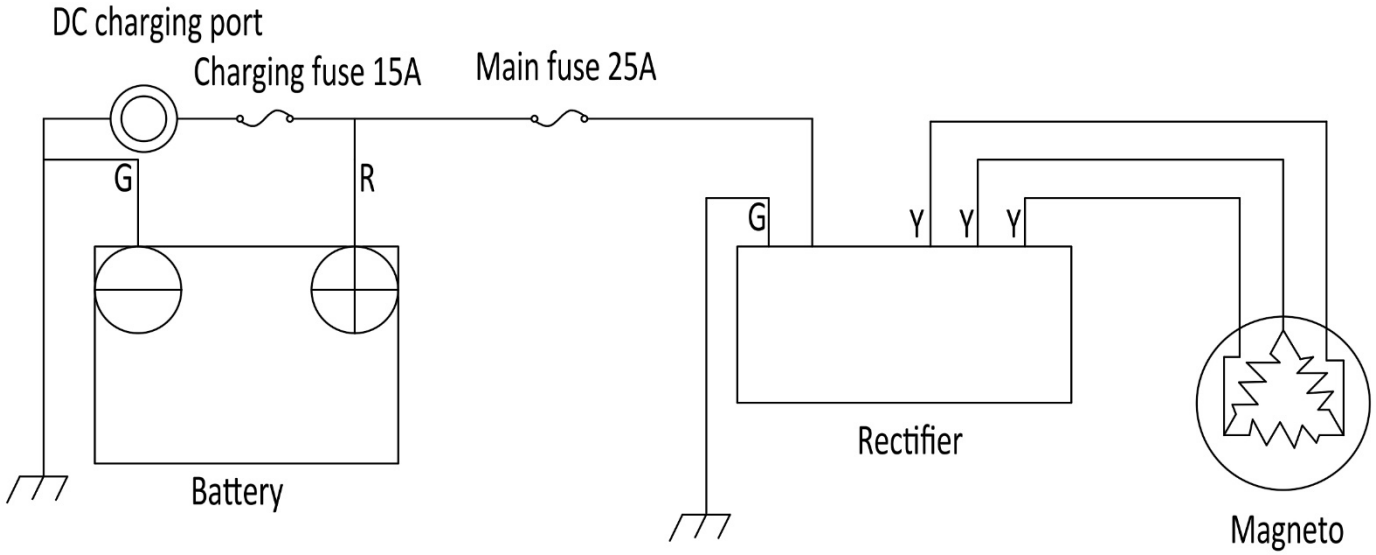

Letter	G	R	Y
中文	绿	红	黄
English	Green	Red	Yellow

Battery Removal and Installation

1.Removal

Note：

●The entire motorcycle must be powered off before removing the battery.

●Disconnect the negative terminal first, followed by the positive terminal. Reverse this order during installation.

●Ensure that both the positive and negative protective caps are properly secured when reinstalling.

●After removing the battery, reset the instrument cluster time and the electronic fuel injection system.

2.Inspection

Follow the removal method for the head cover to dismantle the front panel.



Voltage	Full Charge Voltage	13.1～13.3V
	Pre-installation Charging Voltage	≤12.8V
	In-vehicle Charging Voltage	≤12V

Note：

●Allow a newly charged battery to rest for approximately 30 minutes before measurement, as the voltage of a freshly charged battery may fluctuate.

3.Charging

If the motorcycle fails to start due to a low battery, you can use the charger provided with the motorcycle. Open the right storage box cover and remove the cover plate to access the DC charging port integrated with the PKE system. Disconnect the PKE fuse to begin charging the battery.

Charging System Inspection

1.Leakage Test

a.Turn off the motorcycle and disconnect the power. Remove the negative battery cable.

b.Set the multimeter to the current measurement range. Connect the black probe to the negative battery terminal and the red probe to the removed negative cable. Start with a higher current range and gradually adjust to the appropriate range.

c.Measure to ensure the leakage current is below 0.3mA. If it exceeds the standard value, inspect the circuit for potential short circuits.

2.Checking Charging Voltage

Note：

●Ensure the battery is in good condition before testing.

●Do not disconnect the battery or any electrical components without first powering off the motorcycle.

a.Preheat the engine to its normal operating temperature, then shut it off.

b. Connect the red probe of the multimeter to the positive battery terminal and the black probe directly to the negative terminal. Set the multimeter to the 20V DC voltage range. Turn on the high beam of the headlights and start the engine. Measure the charging voltage when the engine speed is at 5000rpm.

Standard: Battery voltage < Charging voltage < 15.5V

3.Checking the Magneto Stator Charging Coil

a.Refer to the "Replacing the Rear Shock Absorber" steps to remove the rear fender and taillight. Locate and disconnect the yellow 3P connector of the rectifier on the left frame tube at the rear of the motorcycle.

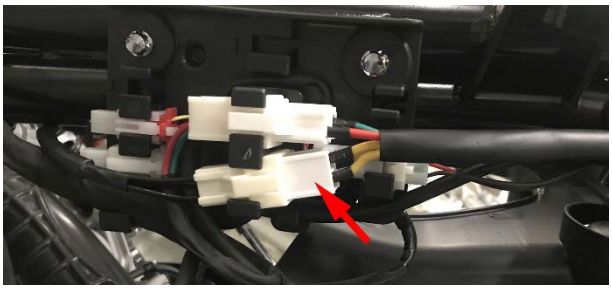

b.Check the connector for looseness or corrosion.

c.Use the multimeter's resistance range to measure the resistance between any two wires of the black 3P connector. The standard range is 0.55～0.85Ω (at 25℃/77°F)

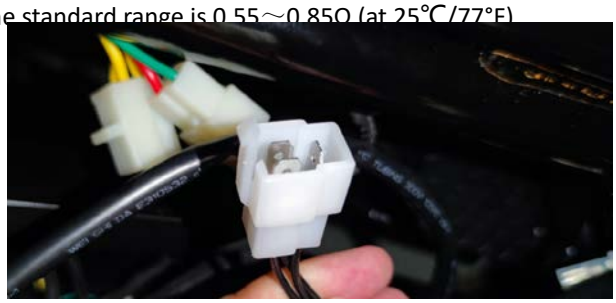

d.After disconnecting the yellow 3P connector, use the multimeter to measure the voltage between the red positive wire and the green negative wire. It should match the battery voltage. Use the multimeter's buzzer mode to check if the green negative wire is continuously connected to the ground (the ground wire can be any stud directly connected to the frame).

10.Fork assembly

Know Before Service

1.It is necessary to use high-quality tools, or special tools and fixtures designed by our company. Using inferior tools may result in damaged parts, detached plating, inadequate assembly, etc.

2.O-rings, paper gaskets, copper gaskets, component seals, etc. used for sealing must be replaced before assembly.

3.Fasteners with torque requirements need to use a torque wrench to check the torque; Refer to the general-purpose torque value recommended for general-purpose fasteners where torque is not required.

4.It needs to be cleaned before assembly; After assembly, it is necessary to check whether the assembly is correct and in place.

5.The motorcycle should be parked and balanced, and safety should be paid attention to during disassembly and assembly. including but not limited to the use of power tools, hand tools, pneumatic tools, hydraulic tools, handling; Protect against contact with skin, eyes, burns, etc.

6.All kinds of oil, liquid, batteries, etc. that have been replaced need to be uniformly recycled and handed over to qualified institutions for disposal; It is forbidden to dump polluting the environment or water sources at will.

7.Swallowing or inhaling coolant, brake fluid, etc. will cause certain harm to the human body. Wash any exposed skin such as hands and face immediately and thoroughly after each addition.If swallowed, contact a poison control center or hospital immediately; If inhaled, immediately move into a ventilated environment. If it accidentally gets into your eyes, you should immediately rinse your eyes with plenty of running water and seek medical attention in time. Always keep out of reach of children and pets.

8.When the front wheel is replaced, a jack or similar device is required to support the whole vehicle.

9.Soiled disc and pads can reduce braking effectiveness, so replace them with new ones and clean the soiled discs.

10.When the front wheel is removed, do not operate the brake handle.

11.After the front wheel is installed, press the brake handle repeatedly until the brake restores the braking effect.

12.If there is a “  ” symbol on the right side of the step, you can click to quickly jump to the corresponding step.

Only some of the basic requirements for the prevention of accidental injuries can be enumerated; It is not possible to exhaustively list all scenarios. Be vigilant during disassembly and assembly to prevent accidents.

Fork Component Exploded View:
Direction put exploded view
24 models

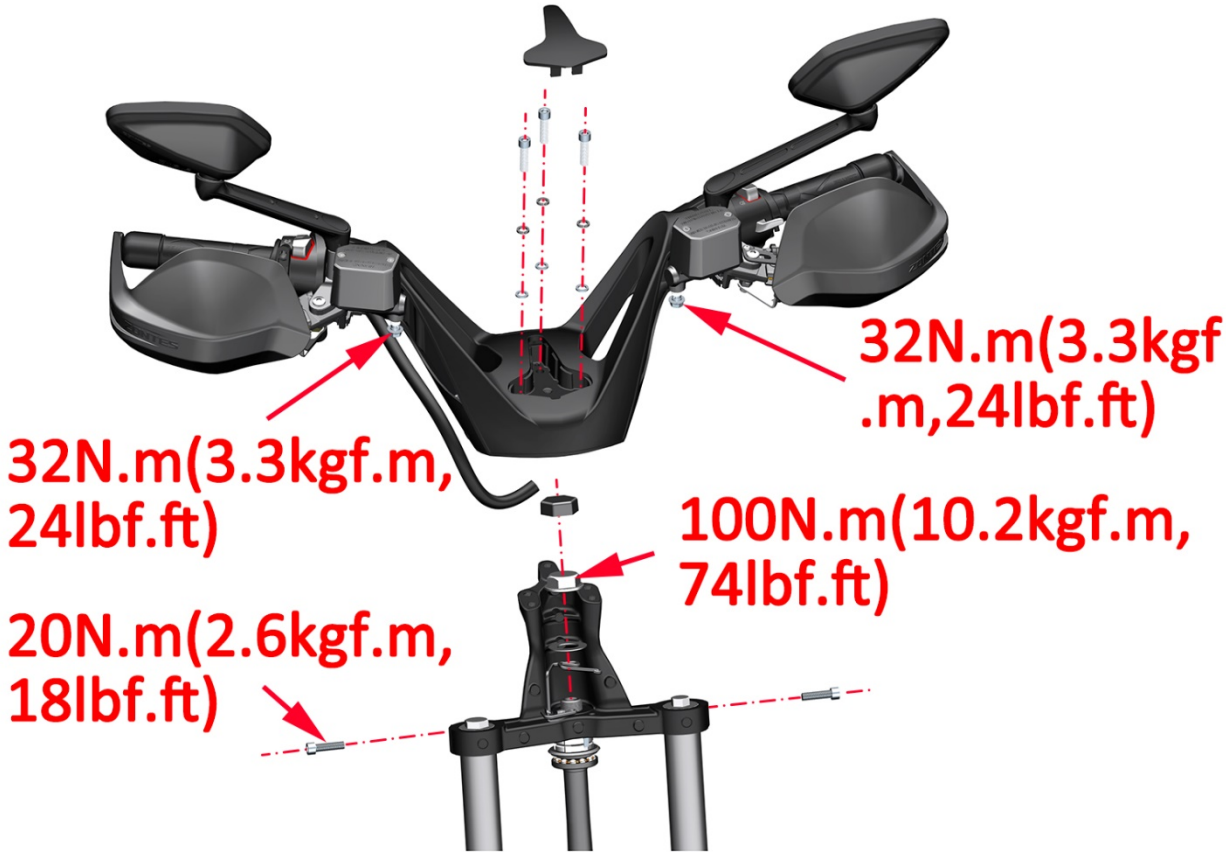

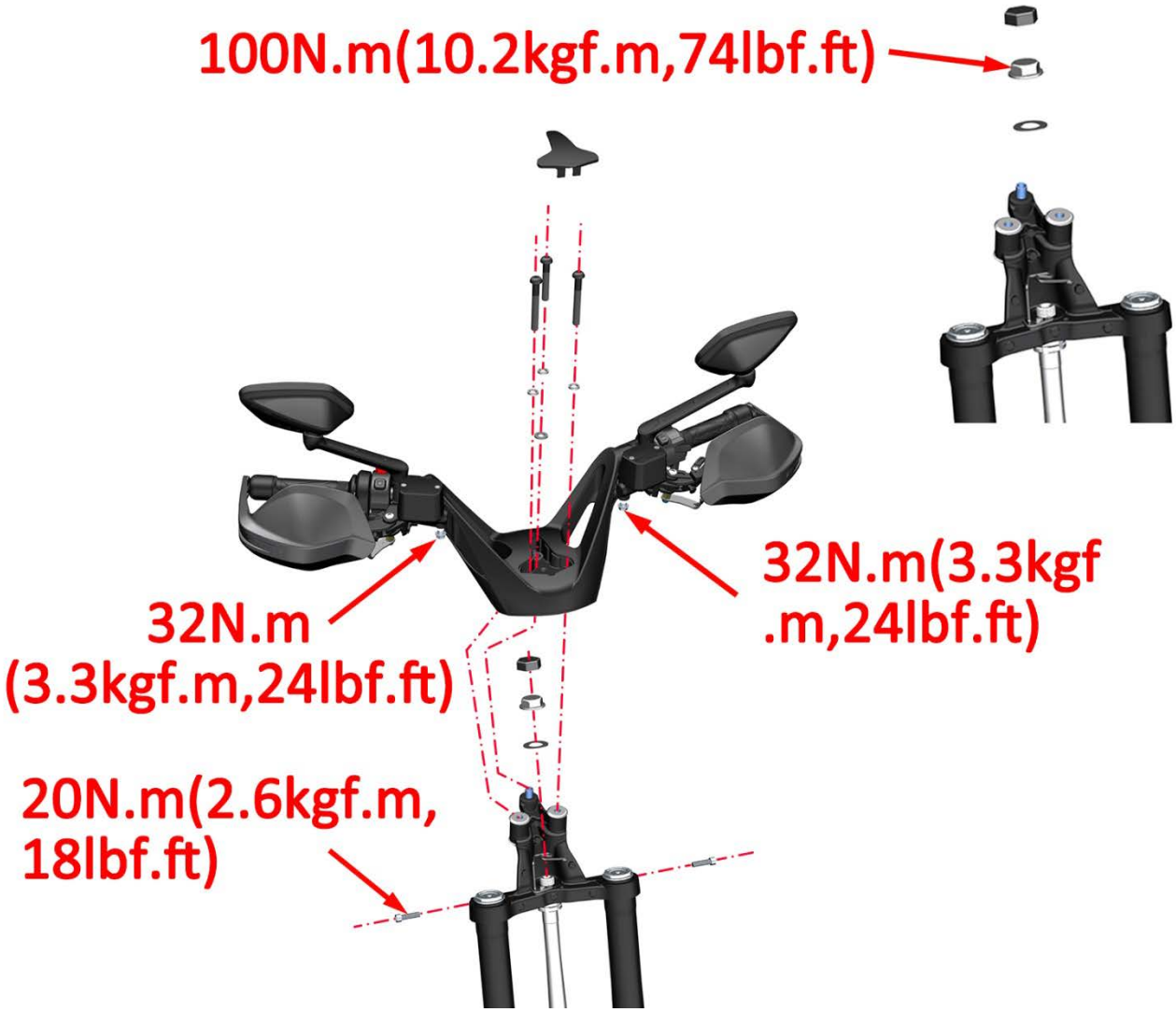
100N.m(10.2kgf.m,74lbf.ft)
32N.m(3.3kgf
.m,24lbf.ft)
32N.m
(3.3kgf.m,24lbf.ft)
20N.m(2.6kgf.m,
18lbf.ft)

Front fork decomposition diagram

24 models

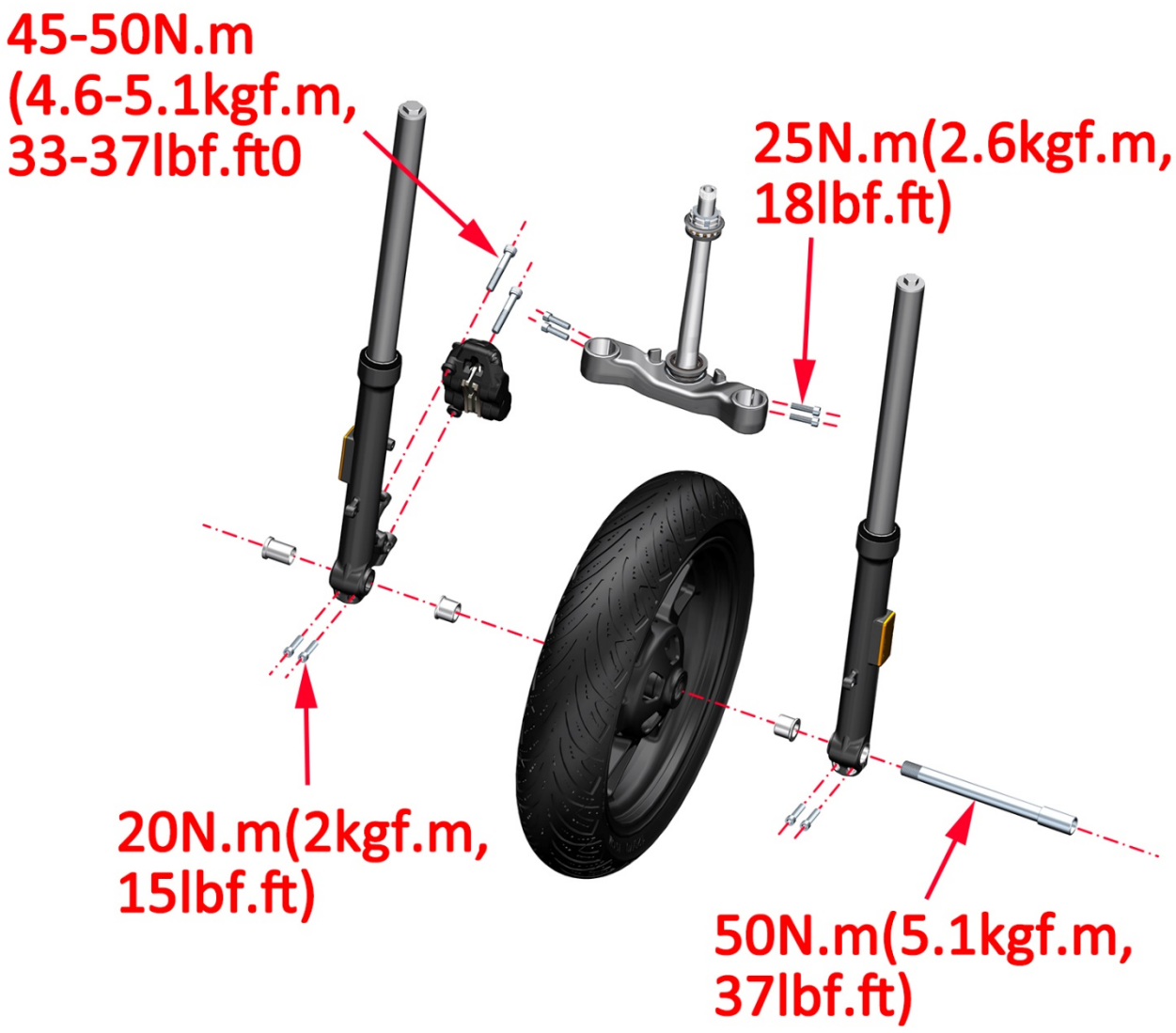


25N.m(2.6kgf.m,18lbf.ft)
45-50N.m
(4.6-5.1kgf.m,
33-37lbf.ft0
50N.m(5.1kgf.m,
37lbf.ft)
20N.m(2kgf.m,
15lbf.ft)

Exploded view of the lower panel

24 models

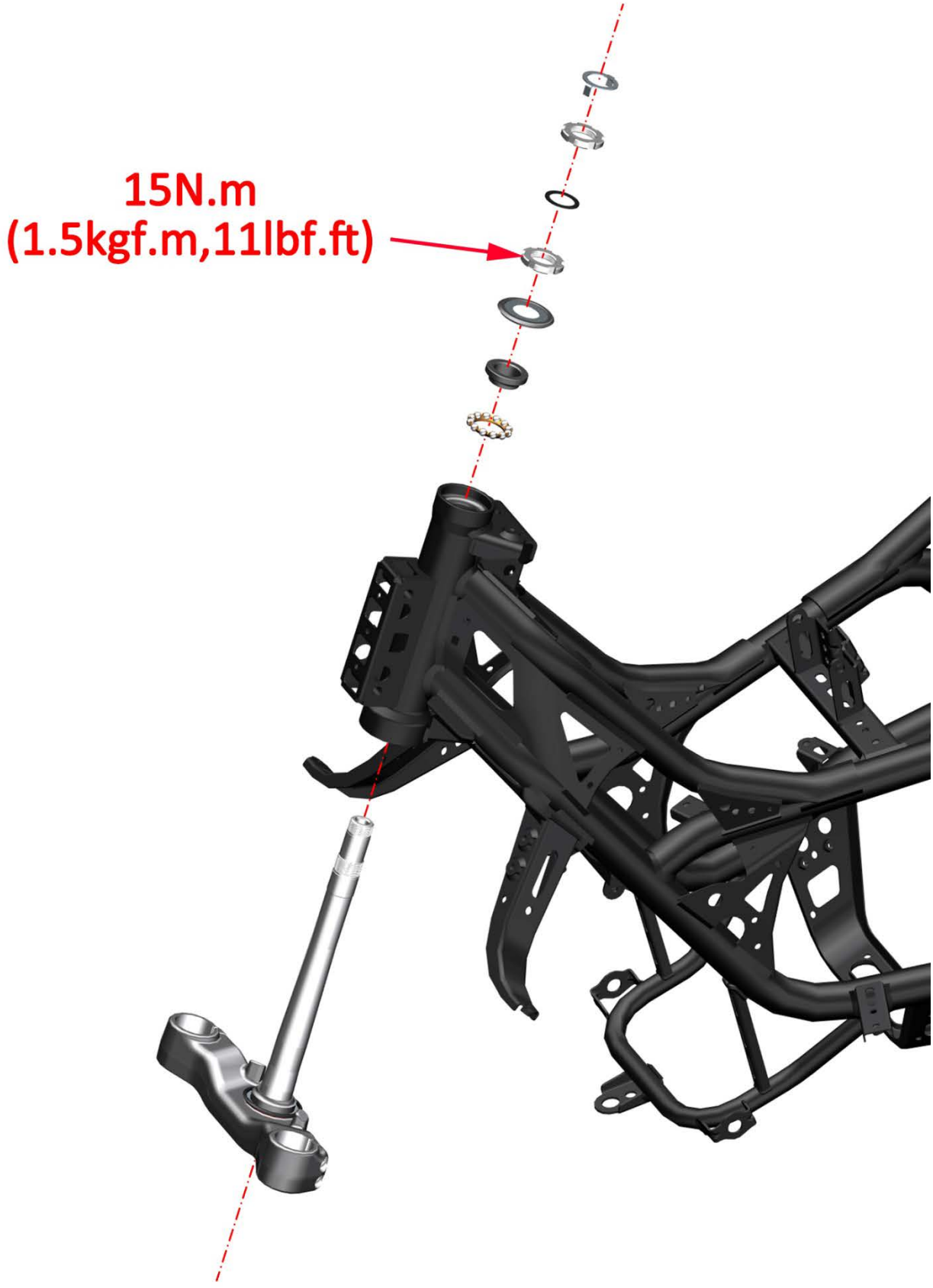

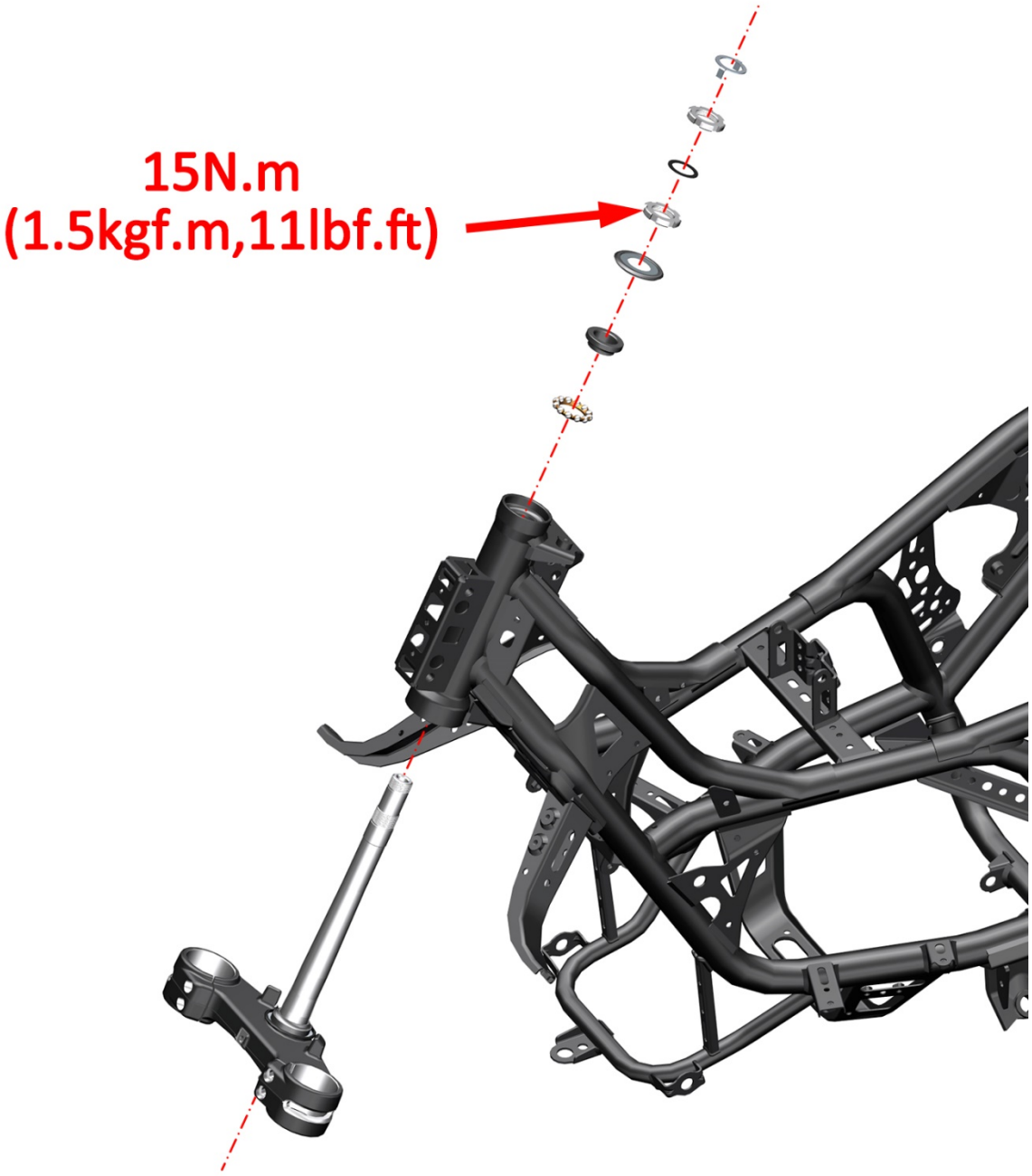
15N.m
(1.5kgf.m,11lbf.ft)

Replace the steering handle (24 models)

Note:

●The disc brake cup must be removed vertically upwards to prevent air from entering the brake line.

●When disassembling and assembling the handlebar switch, pay attention to adjusting the internal wiring harness of the switch to avoid the shell or bolt column clamping the wire skin.

1.Remove the steering handle

a.Use a T25 Allen Torx wrench to remove the 2 shoulder bolts (1). Remove the 2 expansion nails (2) with a cross batch, and remove the direction handle lower cover (3).



b.Use a 6# Allen wrench to remove the 4 bolts (7) and remove the 4 pads (6). Remove the left handle briquetting (4) and the right hand briquette (5). Wrap the left and right handlebars and switch components in bubble bags to prevent scratching of the covers.

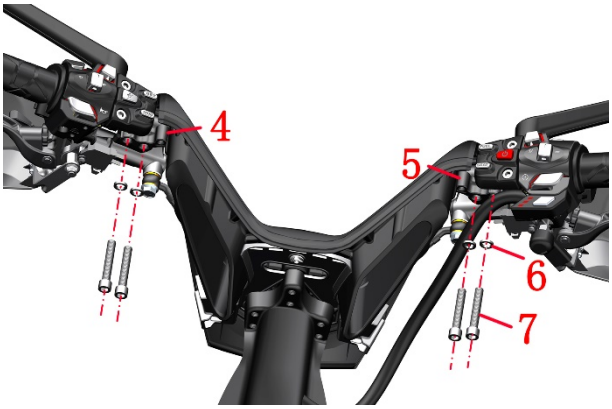

c.Use a word batch to pry open the direction at the arrow and remove the upper cover (9). Remove 3 M8×30 bolts (10) with 6# hexagon sockets, and remove 3 spring pads (6) and 3 flat pads (11). Remove the steering handle assembly.

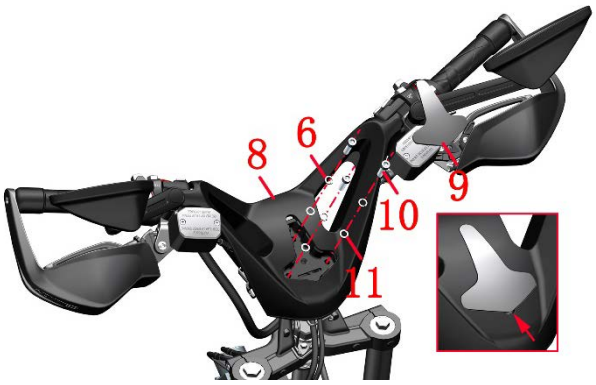

d.Use a T25 socket torx wrench to remove the 3 shoulder bolts (13), remove the direction handle (8) and the direction lower cover mounting plate (12).

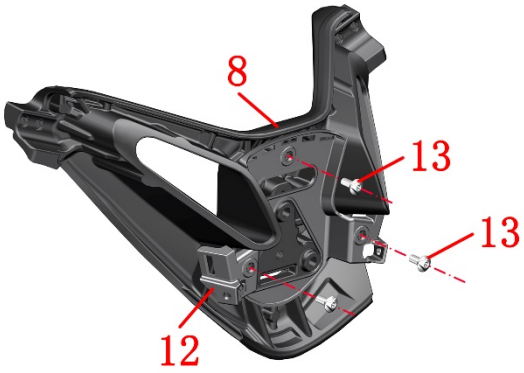

2.Disassemble the direction to put the assembly

a.Use a T25 Allen Torx wrench to remove the 2 bolts (1).

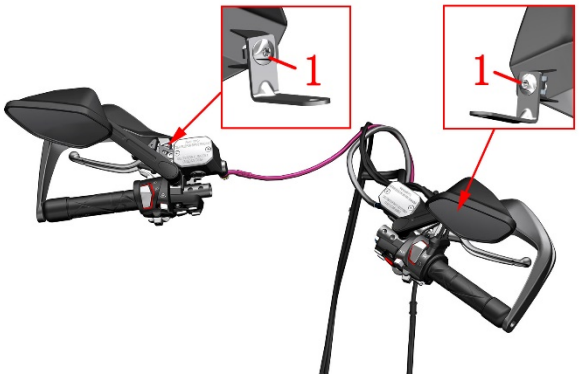

b.Use the 5# hexagon socket to loosen the balance weight bolt A for 5-8 turns, and remove the left and right hand guards and the balance weight assembly.

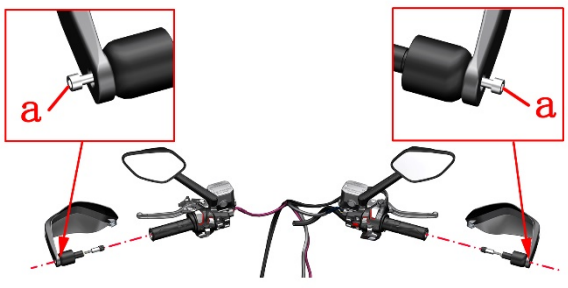

c.Remove 4 M6×30 bolts (2) with 5# hexagon socket, remove the left deputy handle switch (3), rear disc brake main pump assembly b, right deputy handle switch (4), front disc brake main pump assembly c.

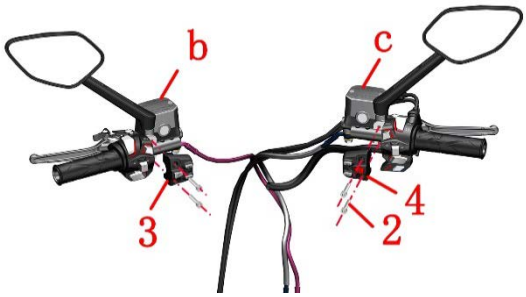

d.Refer to the "Throttle Clue" step and loosen the throttle cable. Use the cross batch to remove the bolt (5) and remove the switch (6). Use the 5# hexagon to remove the bolt D and bolt E under the right hand handle switch, and separate the upper and lower parts of the right hand handle switch. Remove the throttle cord from the right heat handlebar (8). Separate the right hand handle (7) and the right heat handle (8).

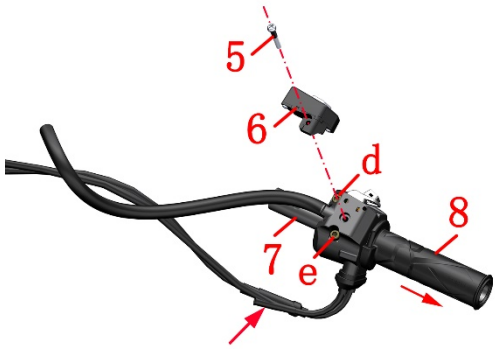

e.Use a 2.5# hexagon tool to remove the set bolt (10) below the left handle rubber sleeve (9), use the 5# hexagon to remove the bolt G and bolt H below the left handle switch, and then use the cross batch to remove the bolt F, and separate the left hand switch up and down. Separate the left handle (11) and the left hot handle (9).

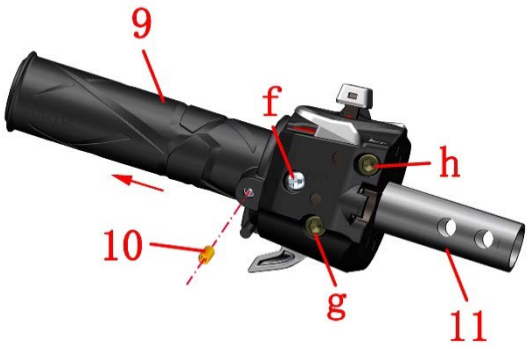

3.Install the direction handle assembly

a.Glue 4 handlebar strips on the inner wall of the left heating handle, and then load the left heating handle into the left handlebar; Replace the throttle cord with the right heated handlebar. Note that there is a positioning hole on the rubber sleeve of the left hand, and after aligning with the direction hole A, use a 2.5# hexagon tool to tighten the set bolt (1). According to the disassembly steps, put the left and right hand guards and the balance weight assembly back, and tighten the balance weight bolt A with 5# hexagon for 5-8 turns.

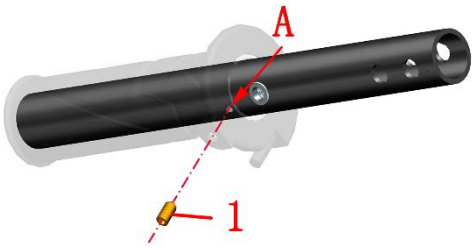

b.When installing the left-hand handlebar switch, it is necessary to align the bolt A with the positioning hole (1) on the directional handle, and then tighten it with a cross batch. When installing the right-hand handle switch, the mounting hole of the heating switch needs to be aligned with the positioning hole (1) on the direction handle, and then tighten the bolt (2) with a cross batch. Use the 5# hexagon socket to tighten the bolts B, bolt C, bolt E, and bolt F that fix the left and right hand handle switches in turn.

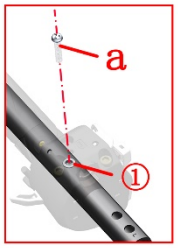

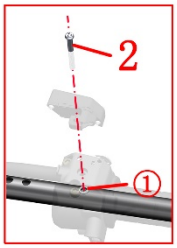

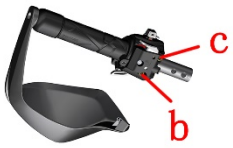



c.When installing the off-hand handlebar switch, you need to align the combination of the off-hand switch with the disc brake main cylinder to align the triangle logo on the handlebar switch, and then use the 5# hexagon socket to tighten 4 M6×30 bolts.



4.Install the direction handles

a.Replace the steering handle lower cover mounting plate with the new steering handle.

b.Secure all the wiring harnesses on the left and right sides back to the direction handlebar assembly.

c.Align the mounting holes with the mounting holes of the upper plate and pre-tighten 3 bolts. After preloading, use 6# hexagon to tighten to 20-25N.m.

d.Preload the left and right hand components and briquettes back to the direction handle, and use 6# hexagon to tighten to 20-25N.m. (When it is inconvenient to assemble the handlebar assembly, the off-handle switch can be removed; When putting it back, you need to pay attention to the direction handle and do not crimp the line.)

e.To prevent scratching the covering, cover the bubble bag to the compartment panel. Pull the front of the lower cover slightly away and put it on. Hide all the wiring harnesses on the left and right sides into the direction handlebar lower cover. (Note: Do not crimp the line) press back the direction handle lower cover buckle as indicated by the arrow. Remove the bubble bag.

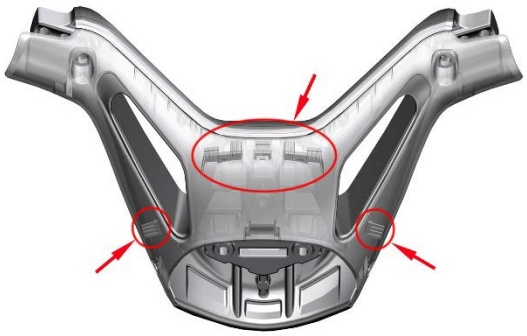

f.Replace the left and right 2 expansion nails. Use a T25 Allen Torx wrench to replace the 2 bolts on the left and right sides. (Check whether the direction handle is pressed or not)

g.Replace the upper cover of the direction handle.

WARNING

●Attention should be paid to the strength when disassembling and assembling the direction handle to prevent damage to the buckle.

●After installation, check whether the throttle cable is assembled in place and whether the return is flexible.

●After the installation is completed, check the switch buttons of the left and right hand switches and the left and right deputy handle switches, check whether they can be used normally, and check whether there is a pressure line.

Replace the steering handle (ETC model)

Note:

●When removing the disc brake reservoir, it must be held vertically upward to prevent air from entering the brake line.

●When disassembling or assembling the handlebar switch, pay attention to adjusting the internal wiring harness of the switch to avoid the housing or bolt posts pinching and damaging the wire insulation.

1. Remove the handlebar cover

a.Use a T25 hexagon socket torx wrench to remove the two shoulder bolts (1). Use a Phillips screwdriver to remove the two expansion nails (2), and then remove the lower cover of the handlebar (3).



b.Use a 6# hexagon socket wrench to remove the 4 bolts (7), then remove the 4 spring washers (6). Remove the left handle pressing block (4) and the right handle pressing block (5). Wrap the left and right handles and the switch assembly with a bubble bag to prevent scratching the covering parts.

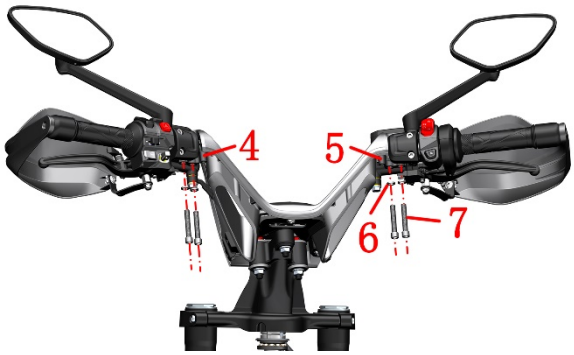

c.Use a flat-tip screwdriver to pry open the upper cover (8) of the steering handle at the arrow and remove it. Use a T50 torx wrench with a hole to remove 1 M10×1.25×60—45 bolt (9) and 2 M10×1.25×75—55 bolts (11), and remove 3 spring

washers (12) and 1 flat washer (10). Remove 3 M10×1.25 nuts (14), 2 washers (15), 2 buffer rubbers (13), and 3 bushings (16). Remove the steering handle assembly.

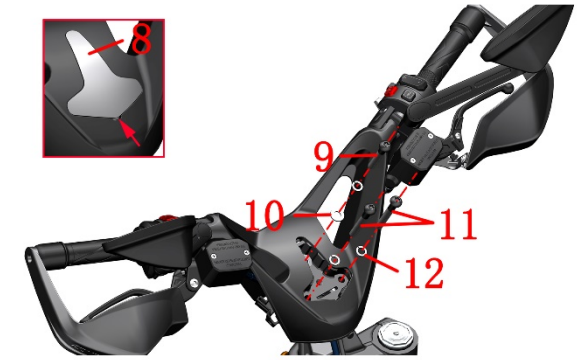

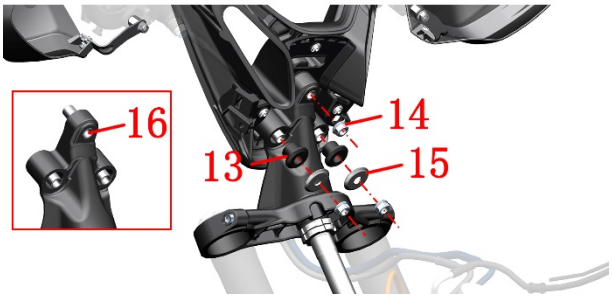

d.Use a T25 hexagon socket torx wrench to remove the 3 shoulder bolts (18), and then remove the handlebar (17) and the lower handlebar cover mounting plate (19).

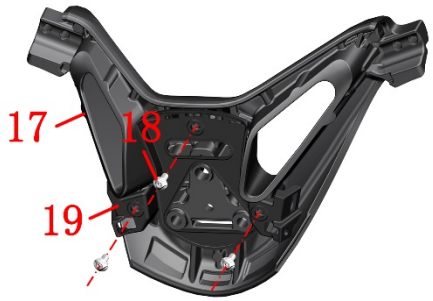

2. Remove the handlebar assembly

a.Use a T25 hexagon socket torx wrench to remove the 2 bolts (1).

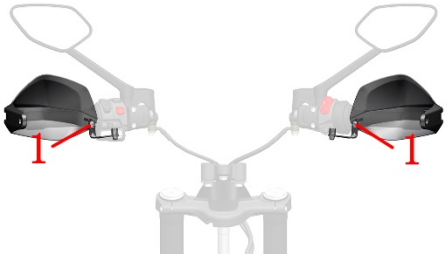

b.Use a 5# hexagon socket to loosen the balance weight bolt a by 5-8 turns, then remove the left and right hand guards and the balance weight assembly.

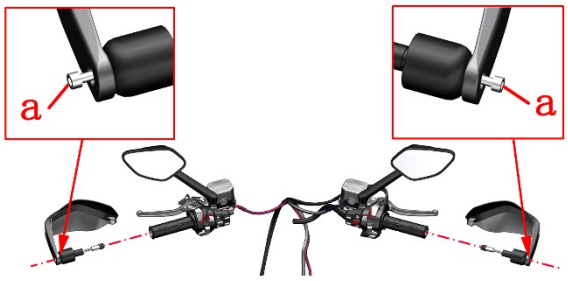

c.Use a 5# hexagon wrench to remove the four M6×30 bolts, then remove the left handlebar half cover, rear disc brake master cylinder, right handlebar half cover, and front disc brake master cylinder.

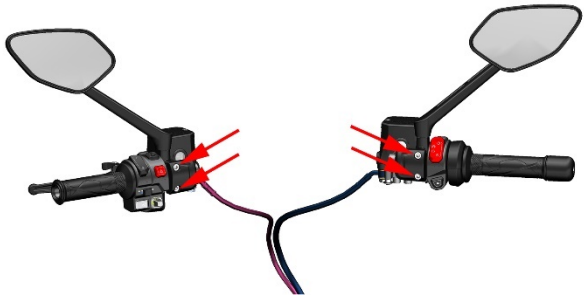

d.Use a Phillips screwdriver to remove the three M4×12 screws b that come with the left handle switch, and remove the M5×25 left handle switch limit screw c. Separate the upper and of the left handle switch. After pulling out the rubber sleeve, use a Phillips screwdriver to remove the M4×30 limit screw and spring washer.

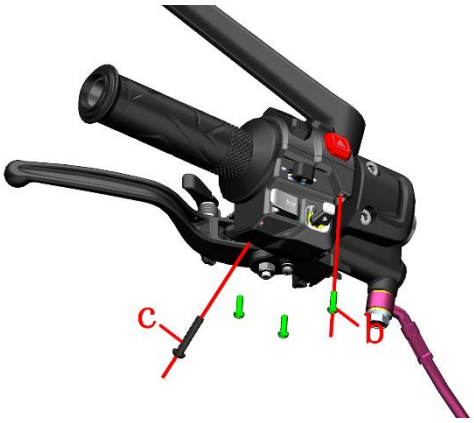

After pulling out the rubber sleeve, use a Phillips screwdriver to remove the M4×30 limit screw and spring washer.

f.Press the two buckles indicated by the arrow, disassemble the fixing clip, and then unplug the plug of the right handle rubber sleeve. Use a Phillips screwdriver to remove the M4×12 screw b that comes with the right handle switch, and separate the upper and of the right handle switch.



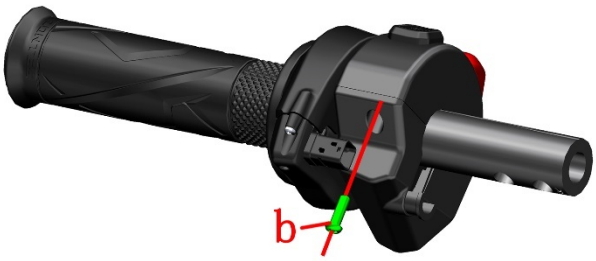

g.Use a Phillips screwdriver to remove two ST2.6×9.5 self-tapping screws d, one M4×30 screw e, and the spring washer. Remove the right handle switch. Note: The screws and self-tapping screws are small in size and need to be carefully stored to prevent loss.



3. Install the handlebar assembly

a.The handlebar grip is limited by an M4×30 bolt, and the disc brake master cylinder is aligned with the recess on the handlebar. Install the left and right hand guards and the balance weight assembly back in accordance with the disassembly steps, and tighten the balance weight bolt a with a 5# hex key for 5 to 8 turns.



4. Install the handlebar cover

a.Simply reinstall the lower cover mounting plate of the steering handle back onto the new steering handle according to the disassembly steps.

b.Secure all wiring harnesses on both the left and right sides back to the handlebar assembly.

c.Align the mounting holes of the steering handle with the mounting holes of the upper connecting plate, then pre-tighten the three bolts. After pre-tightening, use a 6# hexagon socket wrench to tighten them to 20-25 N.m.

d.Pre-tighten the left and right handlebar assemblies and the pressure block onto the steering handlebar, then use a 6# hexagon socket wrench to tighten them to 20-25 N.m. (When it is inconvenient to assemble the handlebar assembly, the handlebar half cover can be removed, and when reinstalling it, pay attention to aligning it tightly with the steering handlebar.)

e.To prevent scratching the cover parts, cover the bubble bag up to the storage box panel. Pull the front side of the lower handlebar cover slightly with force and then install it. Hide all the wiring harnesses on the left and right sides inside the lower handlebar cover. (Note: Do not pinch the wires.) Press the buckle of the lower handlebar cover back as shown by the arrow. Remove the bubble bag.

f.Reinstall the left and right expansion bolts. Use a 4# hex key to reinstall the two bolts on the left and right sides. (Check if the handlebars are pinching the wires)

g.Reinstall the upper cover of the handlebar.

⚠WARNING

●When disassembling and assembling the steering handle cover, attention should be paid to the force to prevent damage to the buckle positions.

●After installation, check whether the throttle cable is properly installed and whether its return is flexible.

●After installation is complete, check the switch buttons of the left and right handgrip switches and the left and right sub-handgrip switches to ensure they are functioning properly and

check for any pinched wires.

Replace the front wheel

Note:

●Be careful not to damage the ABS coil when disassembling.

●After the front wheel is removed, do not press the brake handle.

●The motorcycle must be parked on a level, stable ground or lifting platform.

●It is forbidden to use a high-pressure water gun to flush the oil seal at close range.

1.Remove the front wheel assembly

a.Lay the main bracket, and then use a jack or a suitable device to support the whole motorcycle to lift the front wheels off the ground.

b.Use the 6# hexagon to loosen the bolts (1) of 2 M8×35 at the front left shock absorber, and then use the 17# hexagon to remove the front wheel axle (2), and remove the front wheel and 2 bushings. 45～50N.m(4.6～5.1 kgf.m，33～37 lbf.ft)

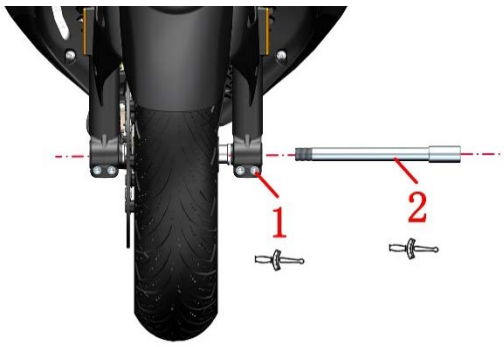

2. Install the front wheel assembly

a.Use a flathead screwdriver to separate the two brake pads within the brake caliper. If significant resistance prevents the separation of the two brake pads, refer to the "Adding Brake Fluid" method to remove the cover of the disc brake reservoir before attempting to separate them again.

b.Place the front wheel into the center of the front shock absorber. Rock the front wheel left and right to engage the disc brake rotor between the brake pads. Align the axle hole and insert the front wheel axle (2). Tighten the front wheel axle with a 17# hex key to a torque of 50N.m (5.1 kgf.m, 37 lbf.ft). After tightening the front wheel axle, there should be a gap of approximately 2mm between the left bushing of the front wheel and the shock absorber. Use a 6# hex key to tighten the two M8×35 bolts (1) at the front left shock absorber to a torque of 20N.m (2.0 kgf.m, 15 lbf.ft).



DANGER

●After the front wheel is installed, press the brake handle repeatedly until the brake restores the braking effect.

●Soiled disc and pads can reduce braking effectiveness, so replace them with new ones and clean the soiled discs.

WARNING

●After each replacement of the front wheel, it is necessary to go to a professional institution for dynamic balance testing.

●It should not be used because tire self-replenishment may clog the air holes of the tire pressure monitoring sensor, causing difficulty inflation or tire pressure monitoring failure.

Exploded view of the front wheel assembly:

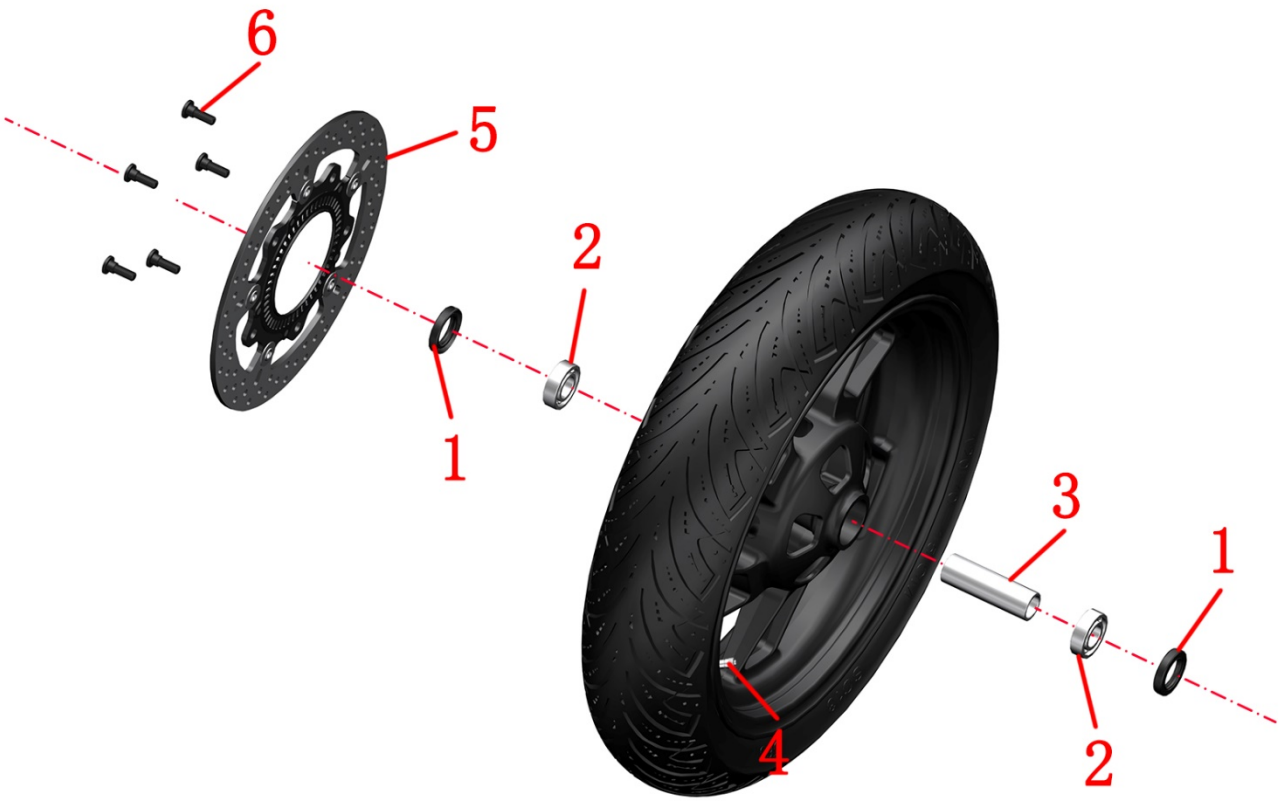

serial number	name	quantity	remark
1	Oil seal TC ϕ28× ϕ42×7	2	
2	GB276 deep groove ball bearing 6004-2RS-C3	2	ϕ20×ϕ42×12
3	Spacer	1	
4	Tire pressure sensor	1	Pay attention to the orientation when installing; The elbow is facing left
5	276×5.0 brake discs	1	
6	Non-standard Torx bolt M8×25	5	25 N.m(2.5 kgf.m，18 lbf.ft)。T45 Plum blossom hexagonal wrench

Front wheel assembly inspection and maintenance:

Note：

●This inspection should be handed over to a qualified maintenance unit to complete.

●Do not press the brake handle after the front wheel is disassembled.

●Be careful not to damage the ABS coil when disassembling.

●The motorcycle must be parked on a level, stable ground or lifting platform.

●It is forbidden to use a high-pressure water gun to flush the oil seal at close range.

1.Disc brake discs

1.1The service life of the disc brake disc

Under normal circumstances, the replacement mileage of the brake disc is about 40,000 kilometers, and the replacement mileage is not absolute, and it needs to be determined according to the owner's travel habits (whether he likes to brake sharply), road conditions, maintenance cycles and other factors, but if he reaches any of the following three situations, he must be replaced.

a.Disc brake disc thickness is measured to less than 4.5 mm (0.18 in) using vernier calipers.

b.Suspend the front wheels in the air, observe the swing of the disc brake disc when the front wheel rotates from the front, and detect the deformation of the disc brake disc.

c.Touch the surface of the disc brake disc with your hand to detect visible pits, deep scratches or grooves.

1.2 How to replace the disc brake disc

a.Refer to "Replacing the Front Wheel" to remove the front wheel assembly.

b.Use a T45 Torx Allen wrench to remove the 5 M8×25 bolts and remove the damaged disc brake disc.

c.After replacing the new disc brake disc, use a T45 Torx Allen wrench. Torque: 25N.m (2.5 kgf.m, 18 lbf.ft).

d.Replace the front wheel assembly.

2.Front wheel oil seals and bearings

2.1 The service life of the front wheel oil seal and bearing

Under normal circumstances, the bearings and oil seals in the front axle need to be checked for 50,000 kilometers, but the bearings and oil seals in the front axle need to be checked according to the actual conditions of the vehicle's driving road conditions and the size of the load, for example, after the motorcycle wades, the water will enter the oil seal and the bearing, and the fine dust in the water will accelerate the wear between the bearing and the oil seal, and at the same time, the water and grease will become emulsion after mixing and rubbing, and lose the original lubrication effect. This also shortens the service life between the oil seal and the bearing. The front wheel seals and bearings should be checked in advance when:

a.There is an abnormal sound of the front wheel when riding.

b.When the steering handlebar shakes left and right while riding.

2.2 Replacement method of front wheel oil seal and bearing

a.Refer to "Replacing the Front Wheel" to remove the front wheel assembly.

b.Use a batch to warp out the oil seals on the left and right sides of the front wheel, check whether the oil seal is damaged and deformed, check whether the outer ring of the bearing fits closely with the rim, if there is no abnormality, then rotate the inner ring of the bearing by hand, check whether the rotation of the bearing is smooth, if there is jamming or abnormal noise, the front wheel bearing and oil seal need to be replaced.

c.The replacement of the front wheel oil seal and bearing needs to be completed by a professional maintenance unit.

d.If there is no problem, apply an appropriate amount of butter to the front wheel bearing, and then use an iron rod and rubber hammer of the appropriate size to press the oil seal to its original position.

e.Replace the front wheel assembly.

3.Front rims and tires

3.1 The service life of the front rim and tires

Generally speaking, there is no limit to the age and kilometers of the rim, but the rim must be replaced in the following cases.

a.The rim is deformed or warped.

b.Cracks or breaks in the rim.

Under normal circumstances, the tires of the front wheels can be used for about 20,000 kilometers, and the normal situation means that the road conditions are not bad and there are no punctures. Because the tires are in rubber products, there will be aging, and the tires will be replaced in about 4 years. If you don't change it, you need to check it frequently to see if the tire is aging, whether the tire has cracks, etc. Tires must be replaced if:

a.The tires have been repaired several times.

b.When the tire tread wear reaches the limit position of the design.

c.There are many aging and cracking phenomena in tires.

3.2How to replace the front rim and tires

a.Refer to "Replacing the Front Wheel" to remove th wheel assembly.

b.Take the removed front wheel assembly to a professional facility and remove the tire using a tire scraper.

c.Use a picker to assemble new rims or new tires. And press the front tire to the standard value. Front tire pressure: 240 kPa (34.8 PSI)

d.Reattach the assembled front wheel assembly back onto the motorcycle.

3.3 Balancing

The wheel is a whole composed of tires and rims, due to manufacturing reasons, the mass distribution of each part of the wheel may not be very uniform, when the wheel rotates at high speed, it will form a dynamic unbalanced state, resulting in the phenomenon of wheel shaking and direction shaking in the motorcycle while driving, in order to avoid this phenomenon or eliminate this phenomenon that has occurred, it is necessary to make the wheel correct the balance of each edge part by increasing the counterweight in the dynamic situation, and this correction process is what we call dynamic balance.The dynamic balance of the wheel can ensure that the wheel rotates more smoothly, reduces vibration and shaking, improves the stability and comfort of the motorcycle, and is conducive to safe drivinga.

a.After each replacement of the front and rear wheels, please go to a professionally qualified institution to test the dynamic balance.

b.The dynamic balance weight must be affixed to the plane specified by the rim (red area).

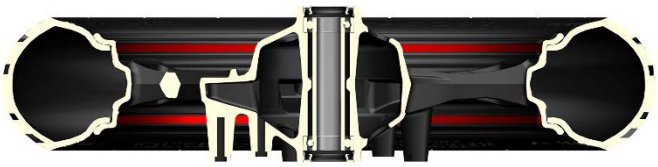

Replace the front shock absorber

Note:

●After the front wheel is removed, do not press the brake handle.

●Be careful not to damage the ABS coil when disassembling.

●When disassembling the front mud board, be careful not to scratch the shock absorber or front mud board.

●When disassembling the shock absorber, remove the two bolts that fix the same shock absorber, remove one side of the shock absorber, and then remove the other side.

1.Remove the front wheel and front fender assembly

a.Refer to "Replacing the Front Wheel" to remove the front wheel.

b.Use the 5# hexagon socket to remove 1 M6×30 bolt (1), and remove the gasket (2) and pipe clamp (3). Use a T45 Torx Allen key to remove 1 x M6×14 shoulder bolt (4) and 1 x M6×16 bolt (5). Remove the two M10×1.5×60 bolts (4) with 8# hexagon sockets, and remove the front brake caliper from the shock-absorbing bottom barrel.

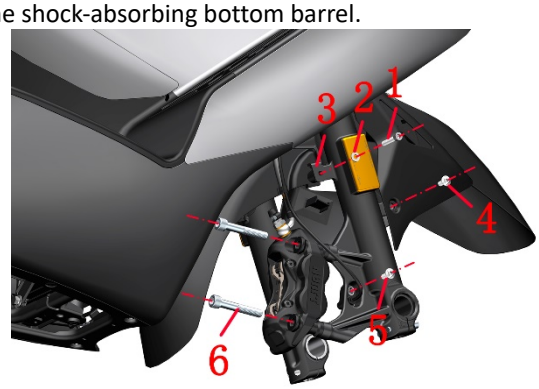

c.Use the 5# hexagon socket to remove 1 M6×30 bolt (1) and remove the spacer (2). Use a T45 Torx Allen wrench to remove the shoulder bolt (4) of one M6×14.

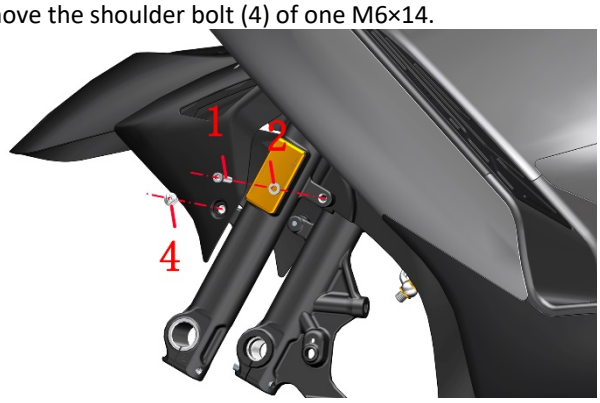

d.First, press down on both sides of the front mud board according to the small arrow, press the bulge at the front mud board arrow inward, and then move the front mud board up to the appropriate part and pull it out according to the direction of the big arrow.

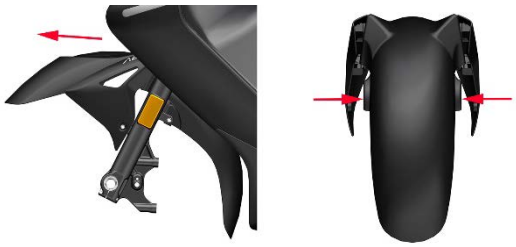

2.Remove the left and right front shock absorbers

a.Refer to "Removing the Windshield" to remove the windshield, front panel center cover, and front panel.

b.Hit the direction handle to the far left, and use the 6# hexagon to remove the 2 M8×30 bolts (7). In the same way, hit the steering handle to the far right and remove the bolt (7). Pry open the gaps in the upper plate with a lot.

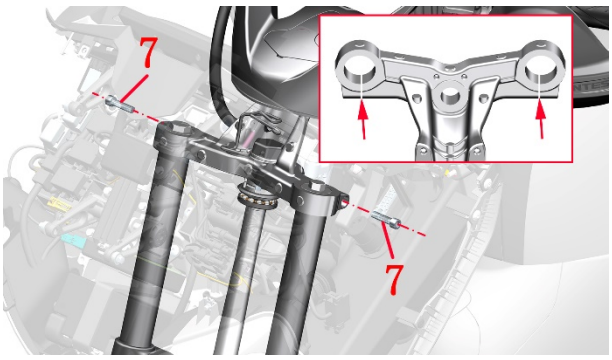

c.Use the 6# hexagon to remove 4 M8×30 bolts (7), pry open the gap on the lower plate with a lot, and remove the left front shock absorber and right front shock absorber.

24 models:

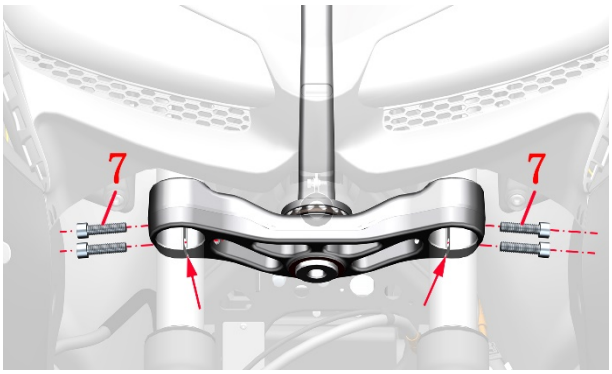

ETC Payment:

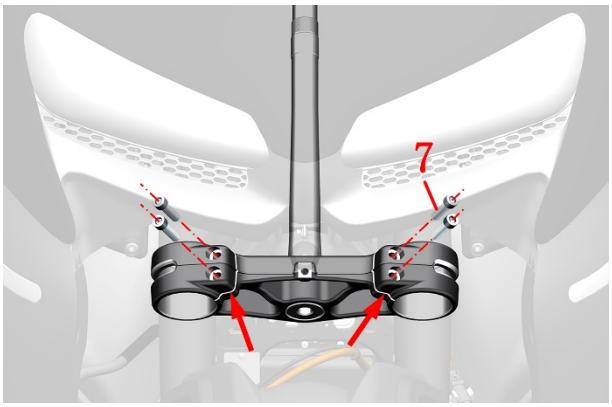

3.Replace components such as shock absorbers, front fenders, and front wheels

a.Use a flathead screwdriver to pry open a gap in the lower plate and insert the corresponding shock absorber.

b.Use a flathead screwdriver to pry open a gap on the upper plate, insert the corresponding shock absorption, and pay attention to the upper end face of the shock absorption and the upper end face of the upper joint plate. Remove the flathead screwdriver after installing the shock absorber in place. Screw in the bolts of M8×30 and tighten them using 6# hexagon sockets. Torque: 25N.m (2.6 kgf.m, 18 lbf.ft).

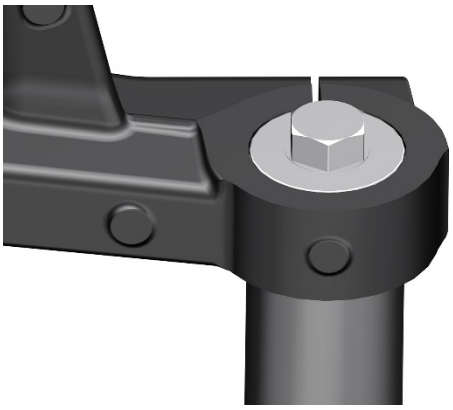

c.Install the two M8×30 bolts on the lower link plate, and use the same method to install the other shock absorber.

d.Pick up the front wheel and install the bushings. Align it with the mounting holes between the two shock absorbers, insert the front wheel axle, and tighten it using a 17# hexagon socket wrench with a torque of 50N.m (5.1 kgf.m, 37 lbf.ft). If one of the shock absorbers is not properly installed, the front wheel axle may not tighten securely or may not be able to pass through the right shock absorber. In this case, you need to remove and reinstall the improperly installed shock absorber.

e.After installing the front wheel, use a 6# hexagon socket wrench to tighten the two M8×35 bolts at the bottom of the right front shock absorber with a torque of 20N.m (2.0 kgf.m, 15 lbf.ft).

f.First, use a flathead screwdriver to separate the two brake pads inside the brake caliper. If the resistance is too high to separate the two brake pads, refer to the "Adding Brake Fluid" method to remove the upper cover of the brake fluid reservoir before separating them. Align the gap between the two brake pads in the brake caliper with the brake disc on the front wheel and install it. Then, use a 8# hexagon socket wrench to tighten the two M10 bolts with a torque of 45~50N.m (4.6~5.1 kgf.m, 33~37 lbf.ft).

g.Press down on the position where the front mudguard was held during removal, and pass it through a suitable position in the middle of the shock absorber. After installing it in the corresponding position, use a T45 torx wrench to reinstall the two M6×14 shoulder bolts. Use a 5# hexagon socket wrench to reinstall the M6×30 bolt and washer at the left shock absorber. At the right shock absorber, install the front oil tube clamp first, and then use a 10# socket wrench to reinstall the M6×20 bolt and washer.

Replace the lower coupling plate

Note:

●After the front wheel is removed, do not press the brake handle.

●The disc brake cup must be removed vertically upwards to prevent air from entering the brake line.

●After disassembly, make sure that all parts are properly replaced.

●Bearings should be installed with an appropriate amount of grease

1.Pre-disassembly of parts:

a.Refer to the procedures for "Replacing Front Shock Absorbers" ,"Replacing Handlebars" ”and "Replacing the Front of the Storage Compartment Panel " ” to remove the front shock absorbers, handlebars, and the front of the storage compartment panel.

b.Remove the wear sleeve (1), use a ratchet wrench + extension rod + 30# sleeve to remove the upper plate cover nut (2), and remove the spacer (3). Remove the upper plate (4).

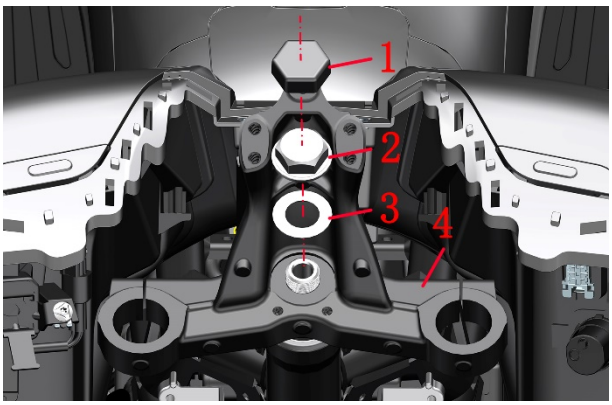

2.Disassemble the lower panel assembly

a.Use a pick pin to pick out and remove the adjustment nut washer, unscrew the first direction post adjustment nut, and remove the adjustment nut washer. One person holds the lower coupling plate with his hand, uses a ratchet wrench and adjusting nut tooling to remove the second directional post adjustment nut, removes the dust cover and pulls out the lower coupling plate downward. You can refer to the exploded view of the lower panel.

3.Install the lower panel assembly

a.Apply the appropriate amount of oil to the new lower

plate assembly and load it from under the frame.

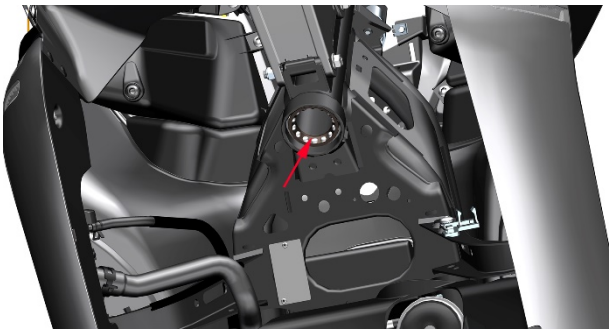

b.Put in the direction column dust cover (1) and the direction column adjustment nut (2) in turn. Then use the adjusting nut tooling to tighten the torque. Tighten 50N.m (5.1kgf.m, 37 lbf.ft), loosen 1/4 turn, then tighten 15N.m (1.2kgf.m, 11 lbf.ft).

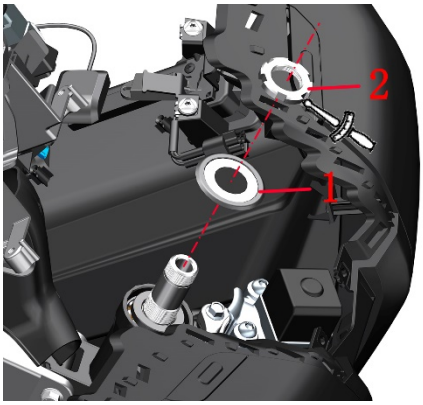

c.Ensure that the lower plate does not rotate and does not jam or loosen, and then put in the adjusting nut washer (3), the direction post adjusting nut (2), and the adjusting nut anti-loose washer (4) in turn. The nut only needs to be tightened and aligned with the first nut.

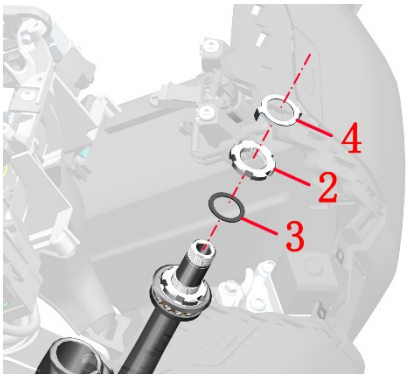

d.Put the upper plate (5) in, then put in the gasket (6), and preload the upper plate decorative nut (7). Note: After installing the shock absorber, tighten the decorative nut of the upper plate. Torque: 100N.m (10.2 kgf.m, 74 lbf.ft). Finally, the wear sleeve (8) is replaced.

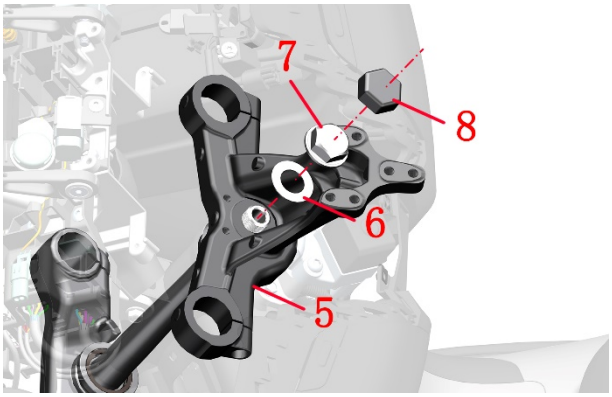

4.Install other disassembly components

Replace the front shock absorber, front fender, front wheel assembly, steering handlebar assembly, front cargo box panel, and front panel windshield as previously removed.

DANGER

●The motorcycle must be parked on a level, stable ground or lifting platform.

●After each front wheel disassembly, the brake handle must be pressed repeatedly until the motorcycle regains braking effect.

11.Disassembly and assembly of motorcycle covers

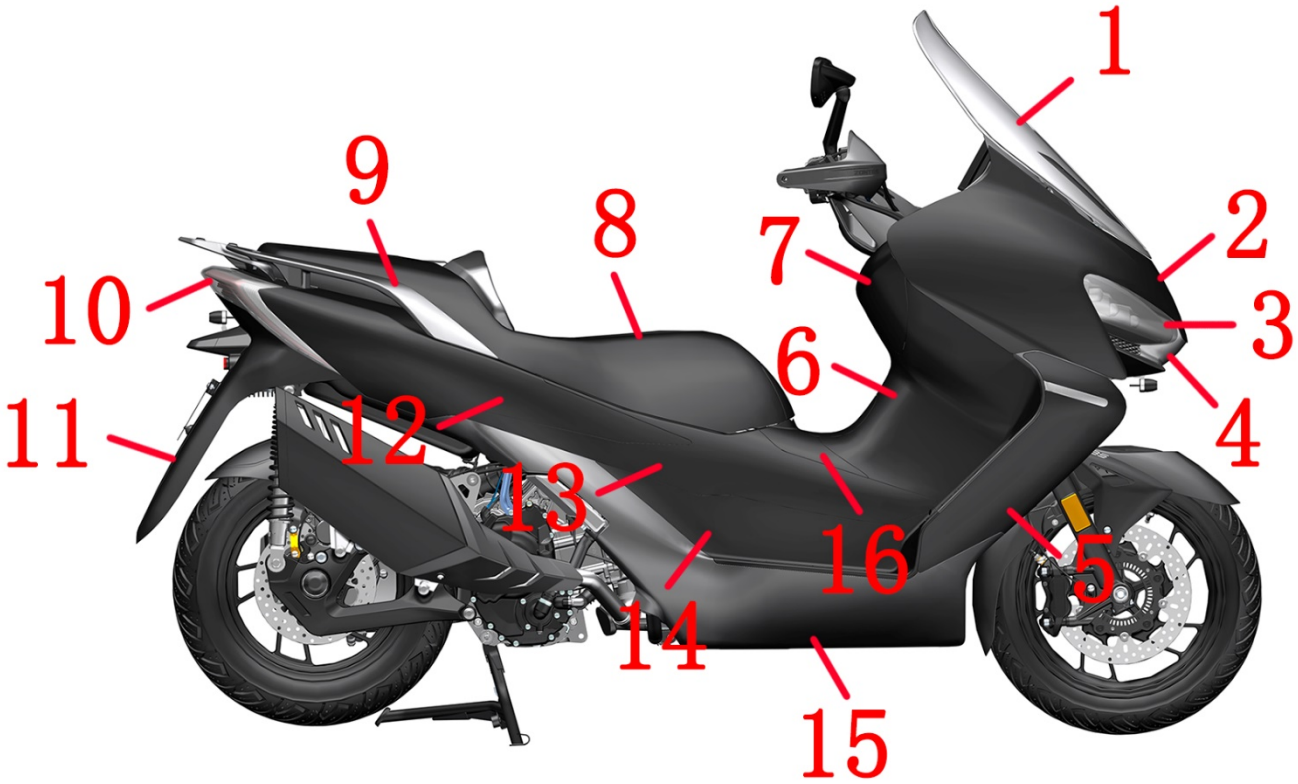

1.Windshield 2.Front panel 3.Headlamp 4.Headlamp cover 5.Right pedal decorative cover
6.Front compartment panel rear 7.Right front compartment lid 8.Cushion assembly 9.Right rear armrest
10.Right tail light 11.Rear fender 12.Right tail skirt 13.Right side cover 14.Right pedal upper
15.Right pedal lower 16.Fuel tank outer cover rear decorative cover

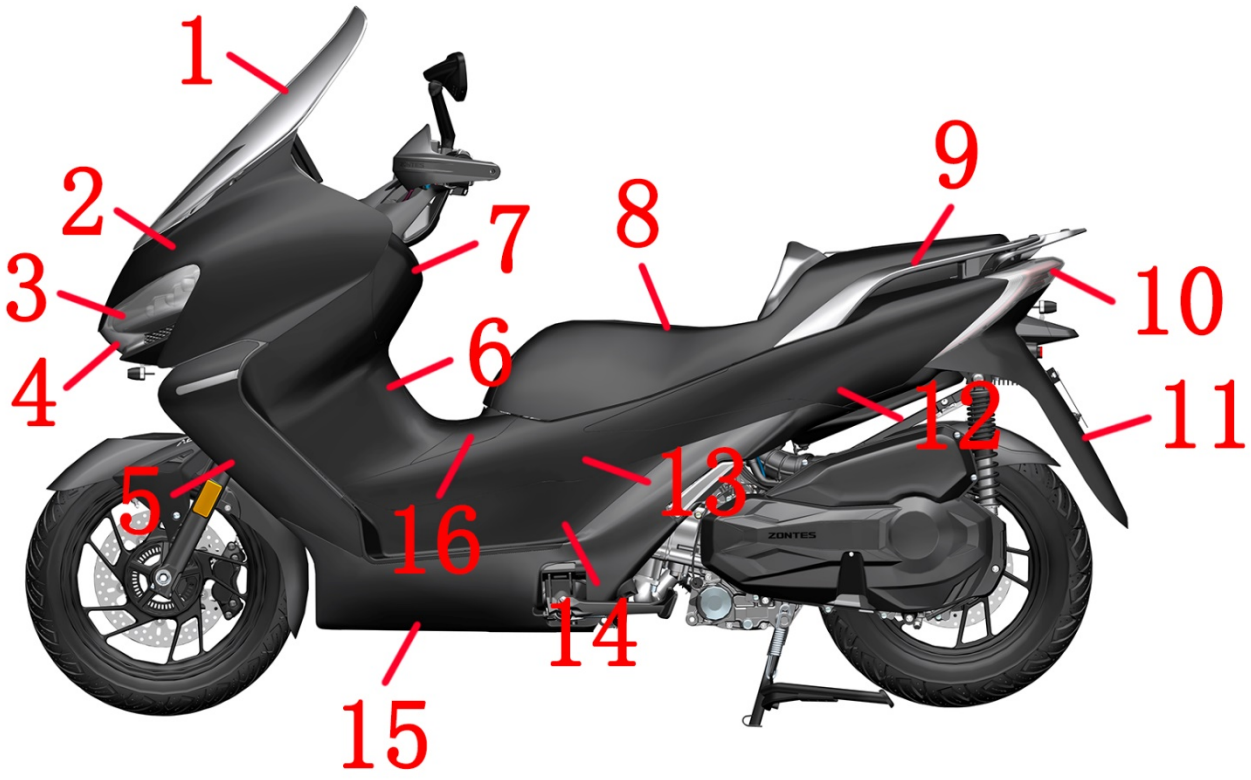

1.Windshield 2.Front panel 3.Headlight 4.Headlight cover 5.Left pedal decorative cover 6.Front compartment panel rear 7.Left front compartment lid 8.Cushion assembly 9.Left rear armrest 10.Left tail light 11.Rear fender 12.Left tail skirt 13.Left cover 14.Left pedal upper 15.Left pedal lower 16.Fuel tank cover rear decorative cover

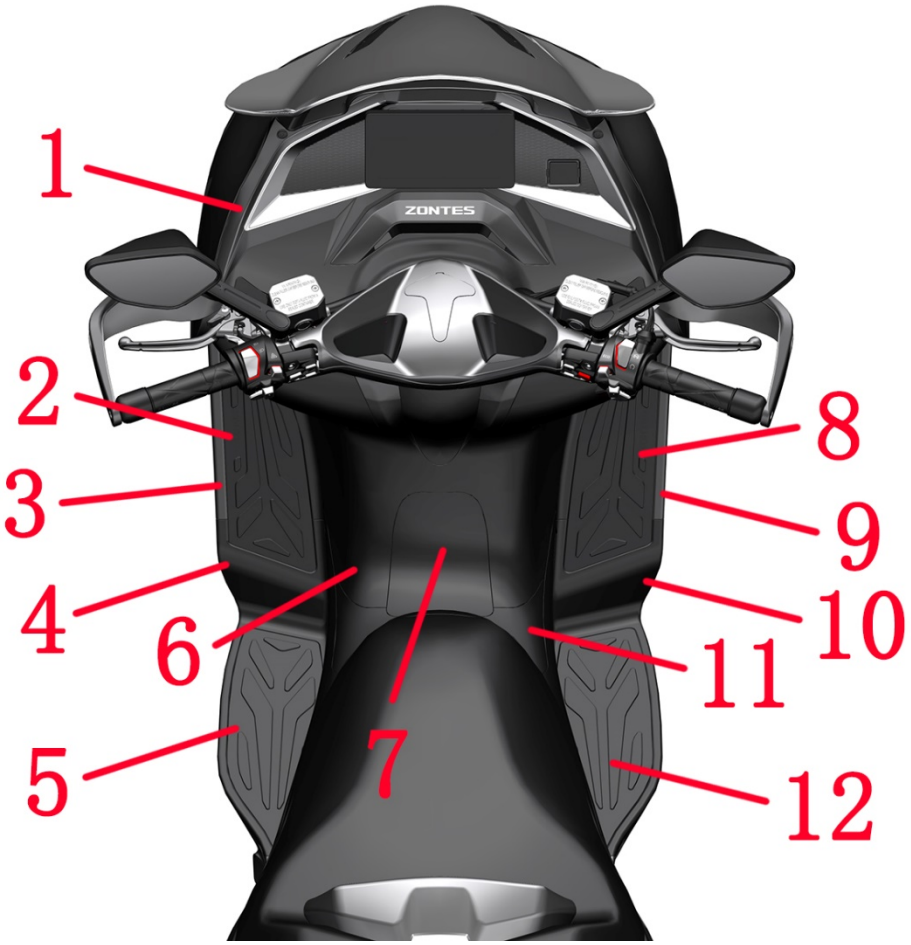

1.Front compartment panel front 2.Front left pedal pad 3.Left pedal decorative cover lining 4.Left pedal upper 5.Rear left pedal pad 6.Front compartment panel rear 7.Fuel tank cover 8. Front right pedal rubber pad 9. Right pedal decorative cover lining10. Right pedal upper part 11. Fuel tank outer cover rear decorative cover 12. Rear right pedal rubber pad

Note:

●When disassembling, please pay attention to the amount of control force to prevent breaking the buckle.

●When disassembling the cover, please remove it in strict order, and do not forcibly disassemble the cover, so as to prevent irreparable damage to the corresponding cover.

●When pulling and unplugging the plug, please control the size of the force and the method of disassembly, and do not forcibly pull the plug to prevent damage to the plug, which may lead to the poor contact of the wiring harness joint and affect the function of each part.

●When installing the wiring harness plug, please check whether the wiring harness ejector pin in the wiring harness male plug is deformed or misaligned, so as to prevent the wiring harness plug from damaging the wiring harness ejector pin in the wiring harness male plug during installation, and then affect the function of each part.

Removal of the windshield

a.Remove the 4 decorative buckles from the windshield.



b.Use a T25 Allen Torx wrench to loosen the 4 M6×16 bolts on the left and right decorative covers of the windshield. Take out the left and right trim covers, windshields, and windshield bracket rubber pads from the windshield in turn.



Removal of the cover in the front panel

a.Use a cross batch to remove the 3 expansion nails (3) on the lid in the front panel. After pulling out the buckle indicated by the arrow, take out the upper part of the front panel middle cover (1) and the lower part of the front panel middle cover (2) respectively.

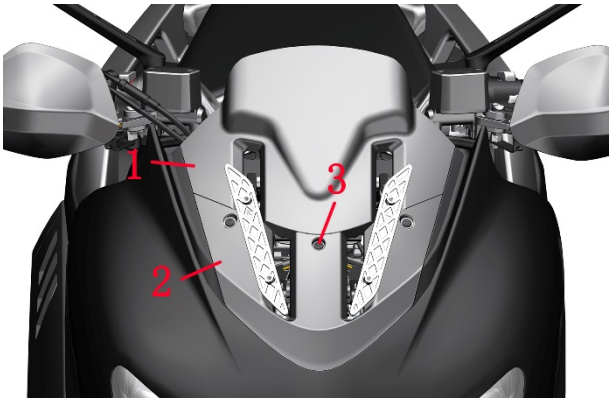

Disassembly of the front panel

a.Use a T25 Allen Torx wrench to remove 2 M6×14 shaft shoulder bolts (1).

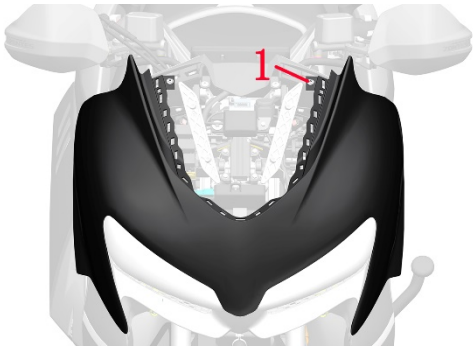

b.Use a cross batch to remove the 2 expansion nails (2) on the lid in the front panel.

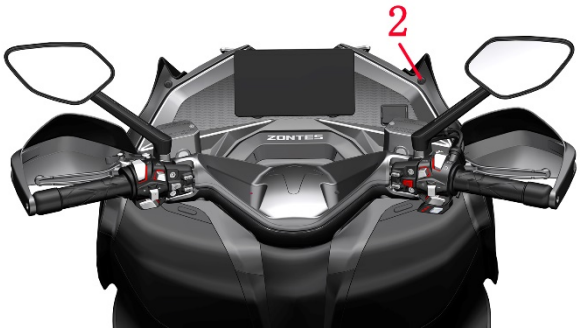

c.Turn on the motorcycle and open the left and right locks. Use a T25 Allen Torx wrench to remove the bolts (1) of the 2 M6×14 shaft shoulders as shown in the figure, and remove the front panel.

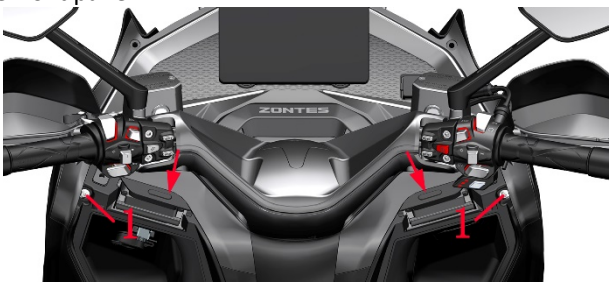

Disassembly of windshield motor components

a.Use the 8# socket to remove the 2 M6×22 bolts (1), remove the bushing (2), buffer glue (3), controller (4) and flasher bracket assembly (5).

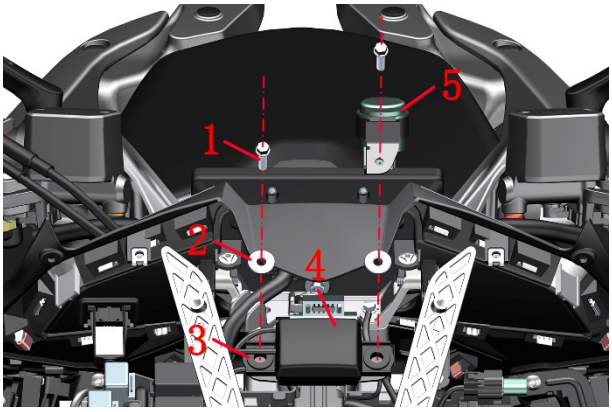

b.Use the 8# sleeve to remove the 4 M6×16 bolts (6), and remove the left bracket (8) and the right bracket (7).

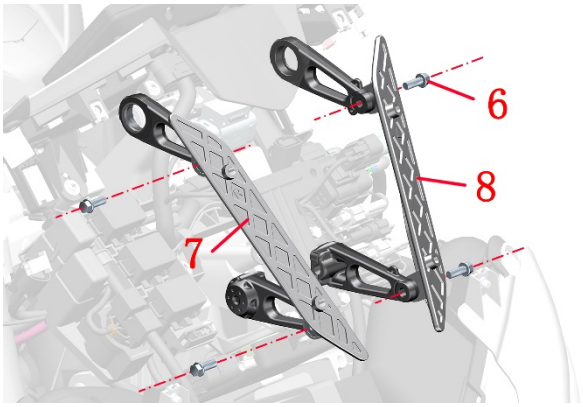

c.Use the 8# sleeve to remove 4 M6×16 bolts (6), and remove the motor pressing plate (9).

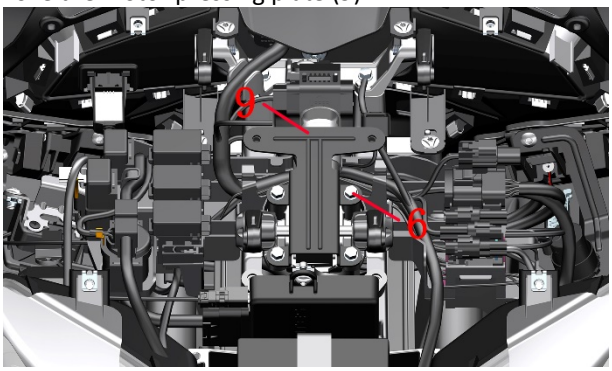

d.Use the cross batch to remove the 4 bolts (16), remove the briquetting (15), the left rocker arm (10), the right rocker arm (11), the buffer glue (14), the motor (12) and the sheath (13).

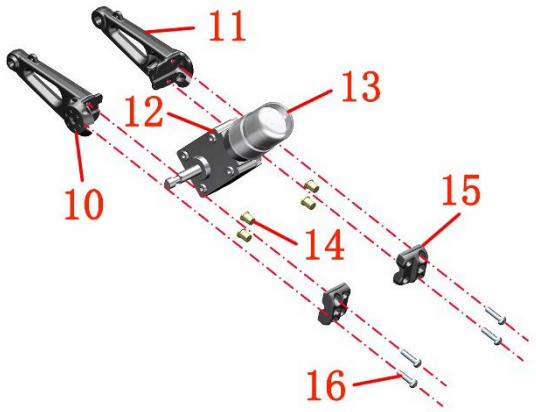

e.Use the 5# hexagon to remove the 2 M8×30 bolts (17), and remove the bearing cover (18) and the upper rocker arm (19).

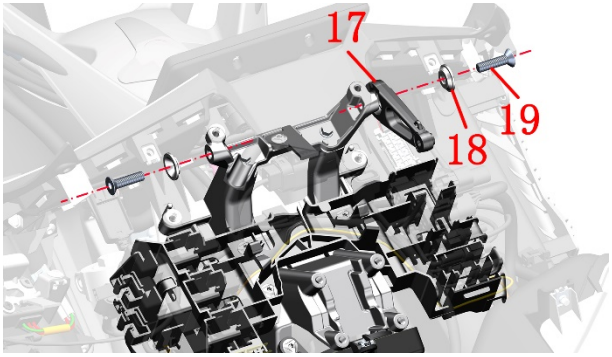

The front of the front compartment panel is removed

a.Press and hold the instrument cable snap to unplug the meter cable. Press and hold the charging cable snap and unplug the charging cable. Use a T25 Torx wrench to remove the bolts (1) of the 6 M6×14 shoulders.

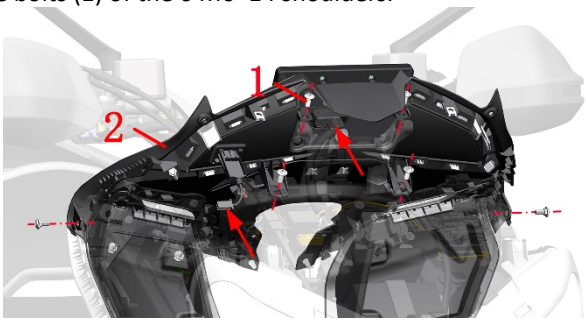

b.Use a cross batch to remove 4 expansion nails (3). Remove the front compartment panel cover (4).

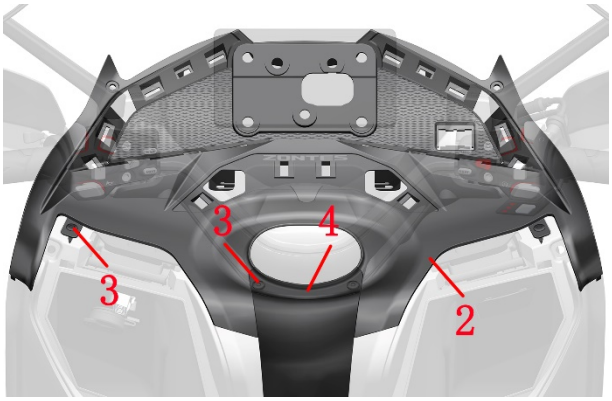

c.Use a T25 Allen Torx wrench to remove the bolts (1) of the 2 M6×14 shaft shoulders and remove the front assembly (2) of the front compartment panel.

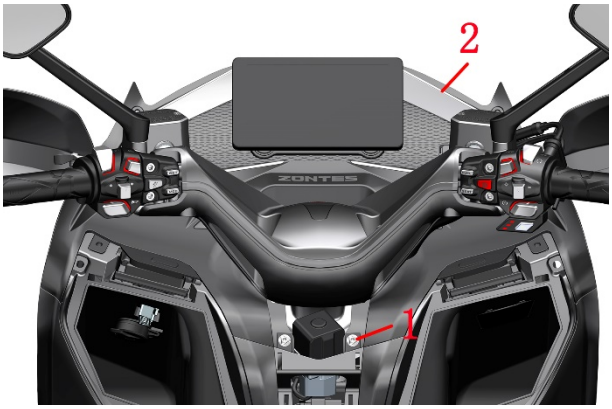

Disassembly of headlight assembly

a.First, open the headline plug cover (1), find the headlamp assembly wiring harness plug and unplug it.

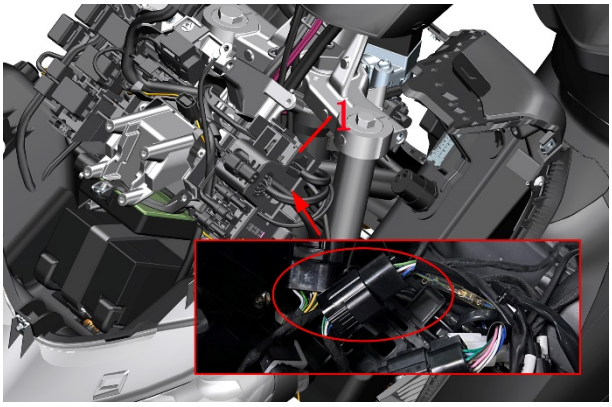

b.Find the front camera harness plug, press the buckle to remove the plug, use the 8# sleeve to remove 4 M6×22 hexagonal flange bolts (2), and then remove the headlight assembly.

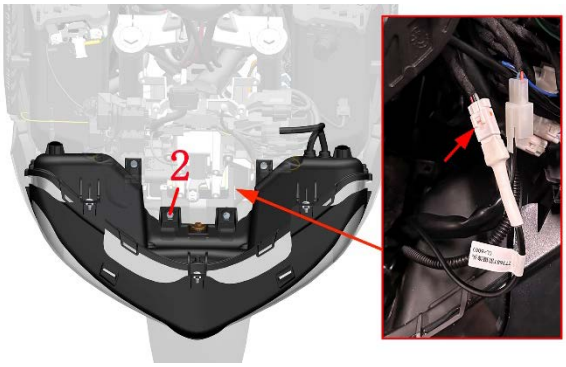

Disassembly of the head bracket

a.Remove the plug on the headline plug cover (3) first, and then remove the headline plug cover (3). Remove the relay and cable that are fixed to the electrical device box (1). Use a T25 Allen Torx wrench to remove the 4 M6×14 shoulder bolts (2) and remove the electrical device box (1).

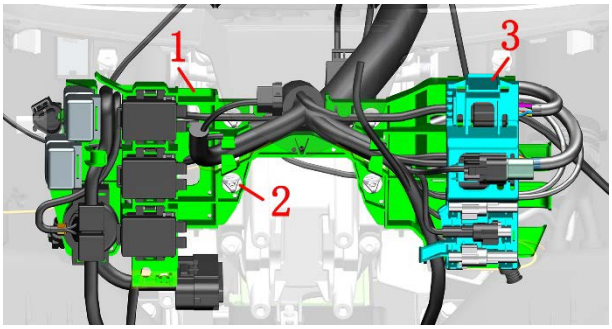

b.Remove the battery according to the battery steps. Use a T25 socket wrench to remove 1 M6×12 bolt (4), remove the bracket (5) and the tilt switch rubber sleeve (6). Use the 8# sleeve to remove 2 M6×16 bolts (8), and remove the rocker arm seat (7).

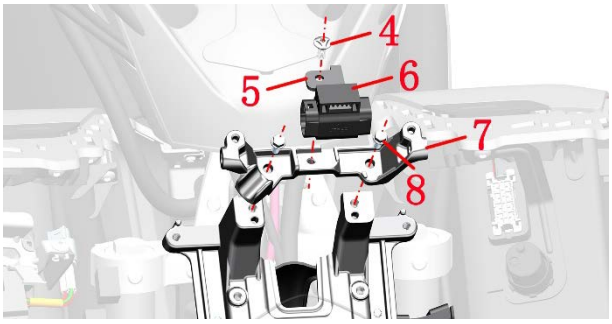

c.Use the 8# sleeve to remove 3 M6×16 bolts (8) and remove the bracket assembly (9). Remove the battery underpad (10).

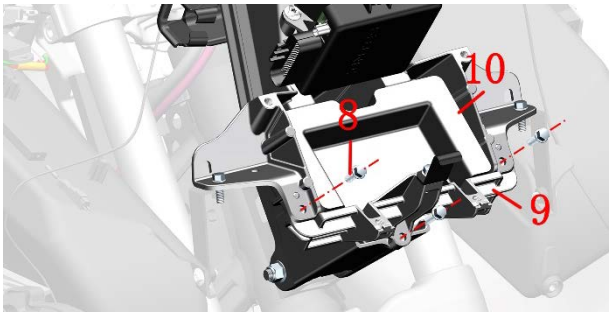

d.Use the 8# sleeve to remove 3 M6×16 bolts (8) and remove the bracket (11).

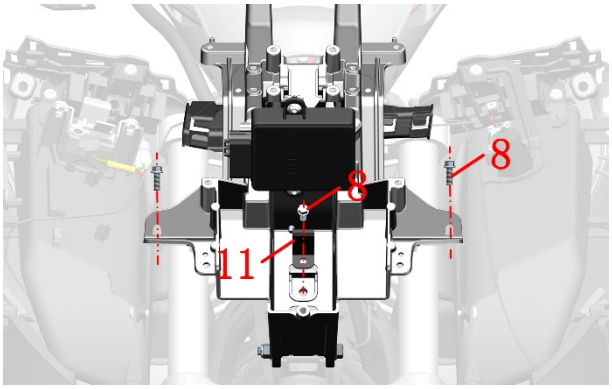

e.Use a T25 socket torx wrench to remove 3 M6×14 shaft shoulder bolts (2) and remove the wire box (12).

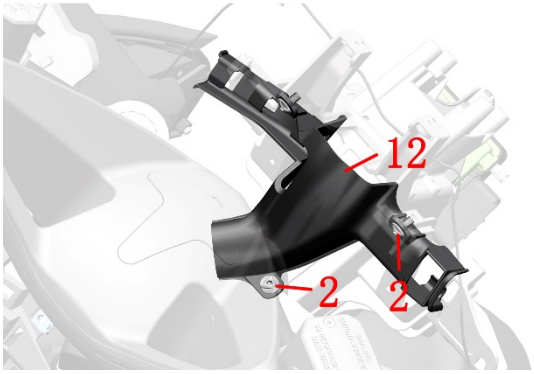

f.Use the 12# sleeve to fix the bolt (15), and then use the 12# open-end wrench to remove the M8×70 bolt (14). Remove the other bolt (14) and remove the head bracket assembly (13) as described above.

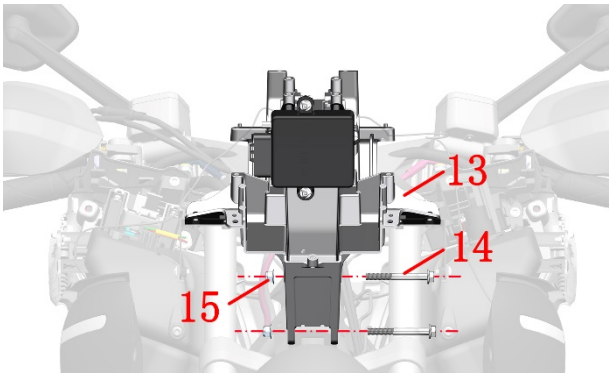

Left and right pedal trim cover disassembled

a.Find the turn signal plug and unplug it. (Left turn signal: orange and green harness connector, right turn signal: blue and green harness connector)

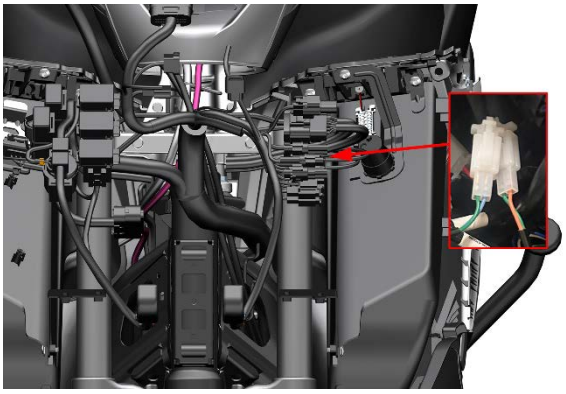

b.Use a T25 torx wrench to remove the shoulder bolts (1) and 1 expansion nail (2) of the 2 M6×14 on the inside of the left decorative cover.

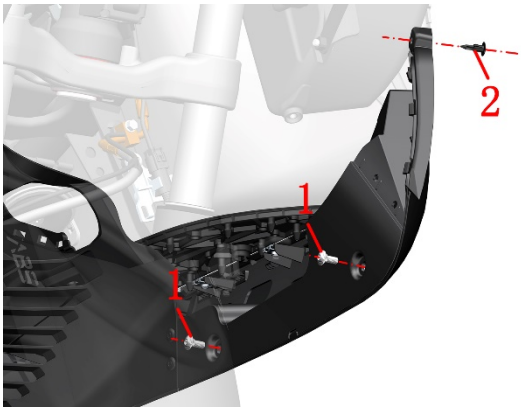

c.After taking out the left pedal rubber pad (3), use a T25 torx wrench to remove the shoulder bolt (1) of 1 M6×14 on the left pedal.



d.Take out the decorative cover (4) after breaking out the buckle of the decorative cover of the left pedal. The disassembly method of the left and right pedal decorative covers is the same, and the right decorative cover is disassembled with reference to the above steps.

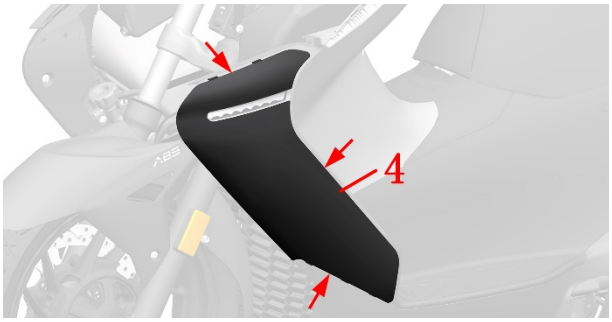

The lining of the left and right pedal decorative covers is removed

a.Use a T25 Torx wrench to remove the shoulder bolts (3) and 2 expansion nails (2) of M6×14 that are fixed to the inner lining (3) of the left decorative cover.

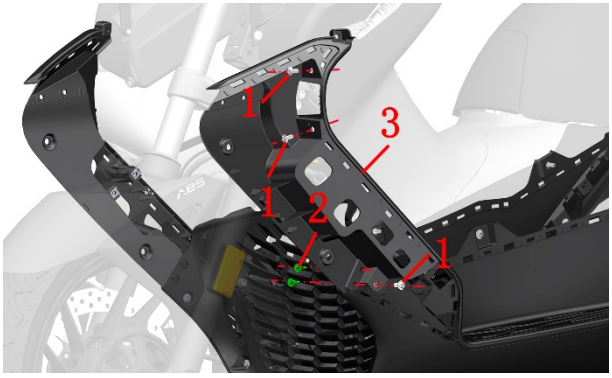

b.Use a T25 Torx wrench to remove the shoulder bolts (1) of the two M6×14 fixed to the lining (3) of the left decorative cover, and remove the inner lining (3) of the left decorative cover.

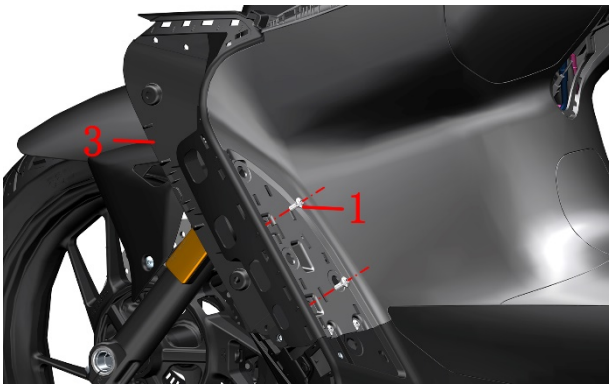

c.Use a T25 torx wrench to remove the bolts (4) of the two M6×12 fixed in the coolant and water buckle bracket, and remove the lining (5) of the right decorative cover according to the disassembly method of the lining of the left pedal decorative.

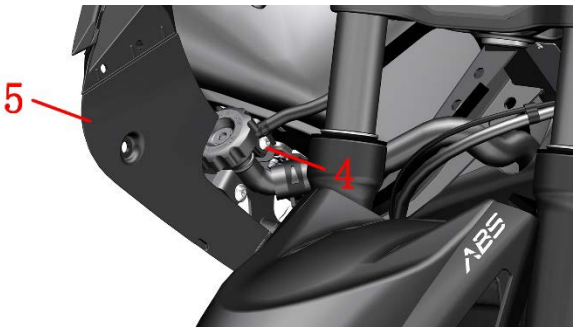

Dismantling of the middle and bottom of the enclosure

a.Use a T25 torx wrench to remove the shoulder bolts (1) of the 4 M6×14 that surround the middle and remove the middle (2).

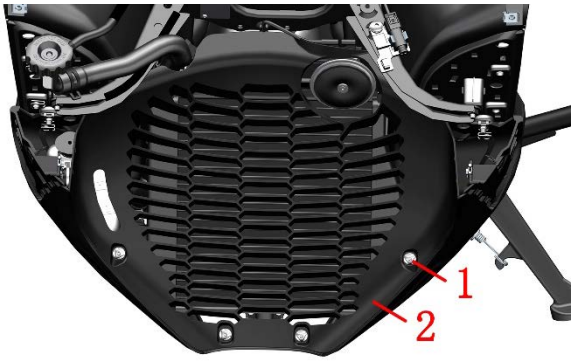

b.Use a T25 torx wrench to remove the shoulder bolts (1) and 4 expansion nails (4) that surround the bottom 4 M6×14 and remove the enveloping bottom (3).

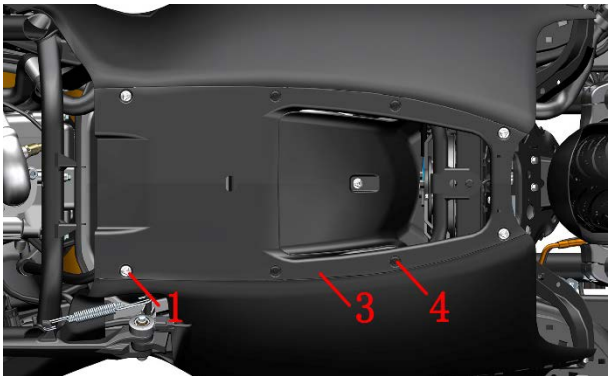

Removal of the rear armrest

a.Remove the 5 decorative buckles (1). Use the 12# sleeve to remove the 2 M8×30 bolts (3) and 3 M8×25 bolts (2) that fix the rear armrest.

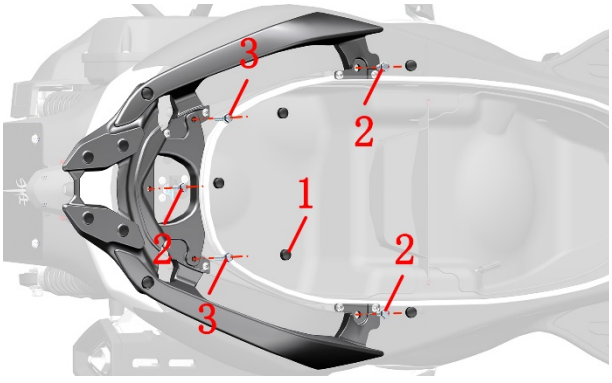

b.Use a T25 torx wrench to remove the 8 M6×12 bolts (4) on the rear armrest and remove the rear armrest assembly (5).

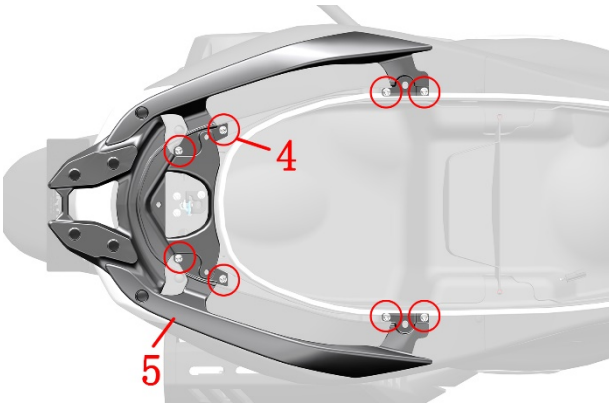

Disassembly of the rear storage compartment

a.Use a T25 torx wrench to remove the shoulder bolts (1) of the 4 M6×14 fixed in the rear storage box, and remove the storage compartment partition (2) and the storage box wear pad (3).



b.Use a T25 Torx wrench to remove the shoulder bolts (1) of the 2 M6×14 fixed in the rear storage compartment. After lifting the storage box slightly, pull out the storage box atmosphere light connector on the left side of the storage box, and then take out the storage box assembly.



Disassembly of the cushion assembly

a.Take out the decorative buckle (1) with a pick. Use the 10# sleeve to remove the 4 M6 nuts (2) that hold the cushion and take out the cushion assembly (3). Do not damage the screws on the cushion studs when removing the cushion.

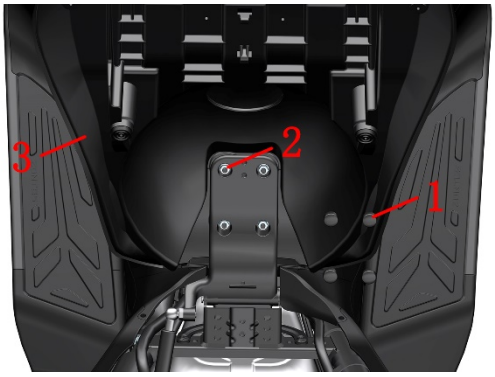

Removal of the rear apron

a.Use a T25 Torx wrench to remove the shoulder bolts (1) and 2 expansion nails (2) of the M6×14 fixed to the left rear apron.



b.Gently push out the buckle on the inside of the tail skirt, and take out the left rear tail skirt (3) in the direction of the arrow. Remove the right rear apron according to the left rear tail skirt removal method.

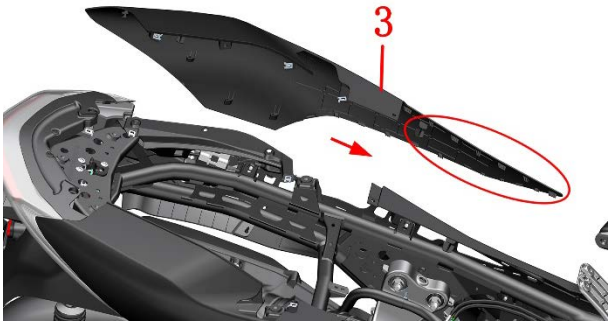

Removal of the rear trim cover of the outer cover of the fuel tank

a.Use a T25 torx wrench to remove the 2 expansion nails (1) of the rear decorative cover of the fuel tank outer cover and remove the decorative cover (2).

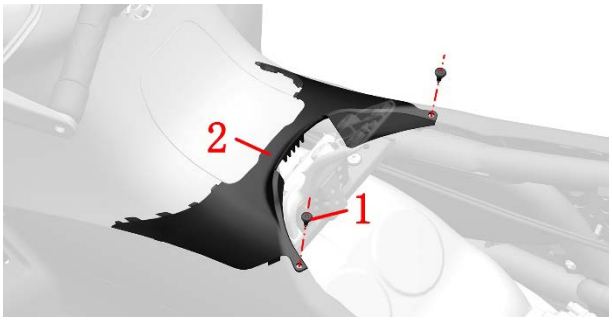

Removal of the left and right covers

a.Use a T25 torx wrench to remove the shoulder bolt (1) of 1 M6×14 that holds the left cover in place, and then remove the left cover (2). Remove the right cover by referring to the removal method of the left cover (2).

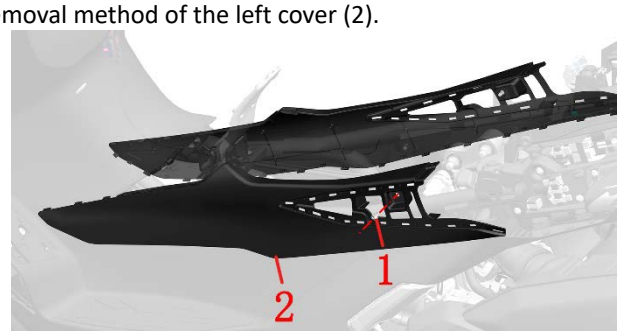

Disassembly of the rectifier

a.Use a T25 torx wrench to remove 4 expansion nails (1) and 2 shoulder bolts (1) of M6×14. Remove the 2 M6×22 bolts (3) that fix the rectifier with the 8# sleeve and remove the rectifier (4) and the front of the rear fender (2).

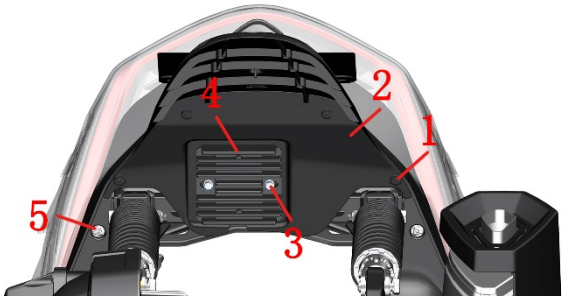

Disassembly of the rear taillight assembly

a.Use a T25 Torx wrench to remove the 2 M6×16 bolts (1) at the bottom of the rear taillight assembly.

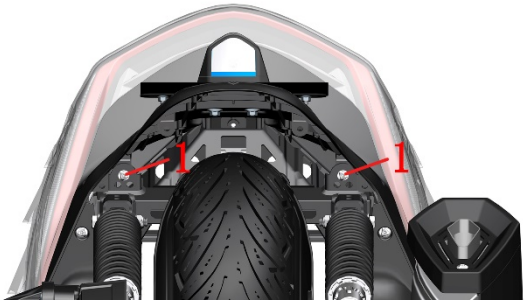

b.Use the T25 torx wrench to remove the 4 M6 ×14 shaft shoulder bolts (2) on the left and right sides of the rear tail light assembly. Unplug the wiring harness connector connecting the left and right parts of the rear tail light, and then remove the rear tail light assembly.

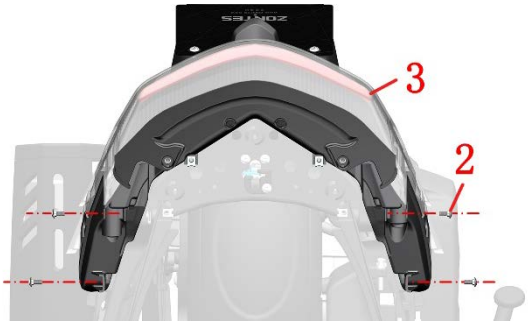

c.Use the joint on the left rear tail skirt lining (5) and the

right rear tail skirt lining (6) to pull out, and use a T25 torx wrench to remove the 4 M6×14 shaft shoulder bolts (2) and 2 M6×16 bolts (4) fixed on the left and right rear tail skirt linings.

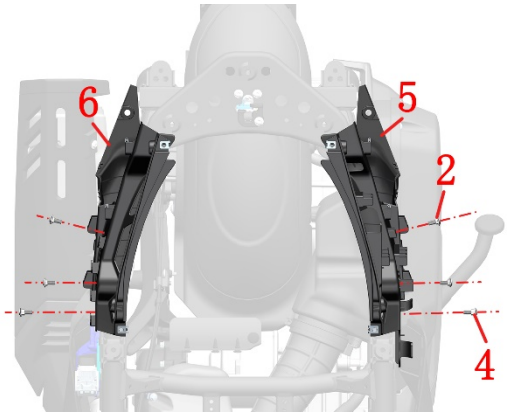

d.Use a T25 torx wrench to remove 2 expansion nails (7). Take out the left rear tail skirt liner (5) and the right rear tail skirt liner (6).

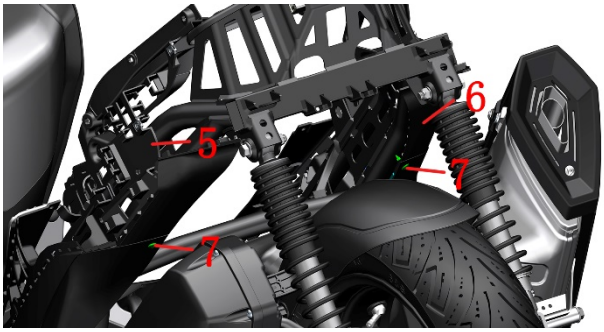

Disassembly of the left and right pedal assemblies

a.Remove the rear left pedal pad. Use a T25 Torx wrench to remove 7 M6×14 shoulder bolts (1). Remove the left pedal assembly.

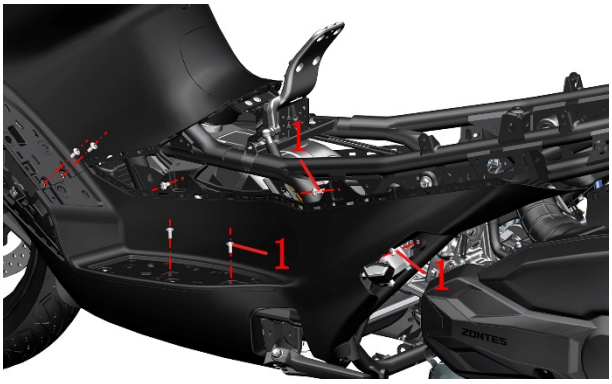

b.Remove the rubber pad on the rear right pedal. Use a T25 Torx wrench to remove 7 M6×14 shoulder bolts (1). Remove the right pedal assembly.

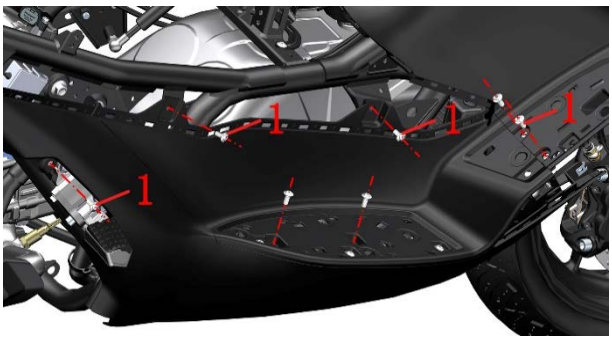

c.Use the 8# sleeve to remove the 2 M6×22 bolts (2) that fix the auxiliary water tank, and remove the auxiliary water tank (3). (The auxiliary water tank should be placed perpendicular to the ground as much as possible to prevent coolant leakage.)



Disassembly of the rear assembly of the front compartment panel

a.Remove the OBD interface (1) with a picker. Locate the USB charging connector (2) and the storage box lock connector (3) and remove them.

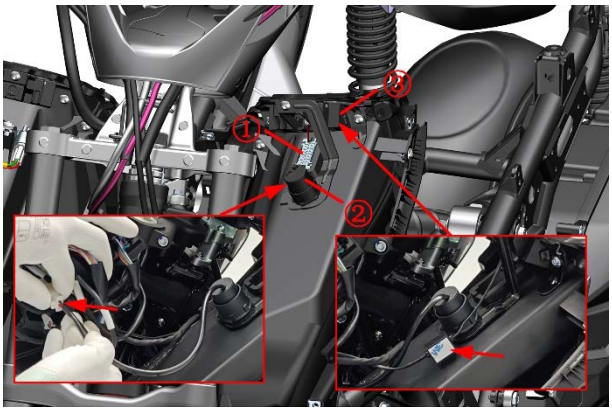

b.Remove the harness connector next to the relay that connects to the storage box panel.

c.Use a T25 Torx wrench to remove the 2 M6×14 shoulder bolts (1) that hold the compartment panel.



d.Turn on the battery, unlock the fuel tank cover lock and remove the fuel tank cover. Then use a T25 Torx wrench to remove the two M6×14 shoulder bolts (1) and M6×14 shoulder bolts (2) that hold the tank lock. Locate and unplug the tank lock harness connector (4), then remove the tank lock (3).

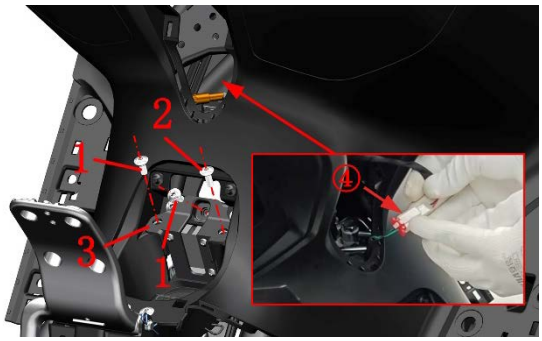

e.Use a T25 torx wrench to remove the 4 M6×14 shoulder bolts (1) of the box panel assembly, and then take out the box panel assembly.

