ZT125/155/250/350/368T-D/368D(ETC) Maintenance Manual



2024-4-7

Introduction

All the materials, illustrations, photos, etc. collected in this manual are compiled according to the latest products of ZT350-D National IV. However, due to the continuous improvement of the product and other changes, there may be some inconsistencies between your motorcycle and this manual. For colors or upgrades, please refer to the part codes on the official website of Zontes. This manual will not be listed in detail; if the part names in this manual are inconsistent with the official website of Zontes, please refer to the official website of Zontes.Individual parts of different displacements that differ in shape or size but are disassembled and assembled in the same way, will not listed in this manual.

The D125 steps are similar to the D350, taking the D350 as an example.

If part of the content of this manual is insufficient, please refer to the "Driver's Manual" included with the bike. The latest version of the driver's manual can be downloaded as a PDF in the model introduction corresponding to the official website of Zontes.

©GUANG DONG TAYO MOTORCYCLE TECHNOLOGY Co.,Ltd
All rights reserved

User notice

This manual is compiled by Guangdong Tayo Motorcycle Technology Co., Ltd. to guide dealers or service personnel to use it. This manual cannot provide more detailed knowledge about motorcycles, and is only for reference for maintenance. If you do not have the corresponding knowledge such as electrician, machine repair, etc., improper assembly or repair failure may occur during repair.

If you need to clean or wash the body parts of the vehicle, you should use neutral car wash fluid or tap water, diesel, kerosene, etc. Acidic or alkaline car wash liquid will cause irreversible corrosion of the surface paint, electroplating surface, and anodized surface of the parts; gasoline will cause premature aging or hardening of sealants, gaskets, and rubber parts, reducing the service life. Non-woven fabrics should be used for wiping with no residue. Ordinary rags may leave cloth scraps or wool, etc., which may affect the assembly or cause other adverse effects.

Our company will update this manual as soon as possible after the product changes.

The following is the meaning of the icons marked in this manual：

	Failure to observe will cause personal injury or death of the driver or maintenance personnel; or cause serious damage to parts and shorten the service life, etc.
	Failure to comply may result in personal injury or death of the driver or maintenance personnel; or damage to parts, abnormalities, etc.
	Failure to observe the warning will cause personal injury to the driver or maintenance personnel; or matters requiring special attention during disassembly and assembly
	Indicates that there is a requirement for torque there
	Indicates that the piece needs to be replaced after disassembly

Content

Content 4
1. Vehicle information 13
Know Before Service 13
Body label 14
D368 Technical specification 15
Front wheel/steering system 15
Rear wheel/suspension system 15
Brake system 15
Battery/charging system 16
D350 Technical specification 16
Front wheel/steering system 16
Rear wheel/suspension system 16
Brake system 17
Battery/charging system 18
Lamp/Speedometer/switch description 18
D125/D125(2024) Technical specification 19
Front wheel/steering system 19
Rear wheel/suspension system 19
Brake system 20
Battery/charging system 20
D155 Technical specification 21
Front wheel/steering system 21
Rear wheel/suspension system 21
Brake system 22
Battery/charging system 22
D250 Technical specification 23
Front wheel/steering system 23
Rear wheel/suspension system 23
Brake system 23
Battery/charging system 24
Tightening torque 24
Bolt tightening torque of general tightening part 24
Cable/cable/pipe/electrical device distribution map 25
1. Distribution map of lamps and lanterns 25
2. Throttle cable 26
3. Brake upper pump and brake hose 26
4. Calipers, brake hoses and wheel speed sensors 27
5. Distribution map of brake system accessories 28
5.1 D368/D350/D250 28
5.2 D125 29
5.2 D125(2024)/155 30
Check whether the hoses are bent, causing the airflow to be unsmooth. 31
6.1 D368 fuel evaporation 31
6.2 D350/D250 Fuel evaporation 31
6.3 D125/125(2024)/155 Fuel evaporation 32
6.4 D350/D250 Fuel supply 32
6.5 D125/125(2024)/155 Fuel supply 33
6.6 D368 Fuel supply 33
7. Distribution map of cooling system accessories 34
7.1 D350/D250/D368 34
7.2 D125/125(2024)/155 34
8. Electrical device layout 35
8.1 D350/D250/D368 35
8.2 D125/D125(2024) 37
8.3 D155 40
9. Intake and exhaust system 42
9.1 D350/D250/D368 42
9.2 D125/125(2024)/155 43

Tool 44
Swell nail description 45
2. Maintenance 46
Know Before Service 46
D125/150/155 Maintenance schedule 47
D250/350/368 Maintenance schedule 47
368D (ETC) Maintenance Schedule 50
D368 Air filter (filter element), air inlet filter element 52
1. Support the vehicle firmly 52
2. Remove the left engine cover 52
3. Replace the air inlet filter element 52
4. Remove the air filter shell 52
5. Replace the filter element of the air filter 53
6. Check the waste oil pipe of air filter 53
7. Reassembly 53
D350 Air filter (filter element), air inlet filter element 53
1. Support the vehicle firmly 53
2. Remove the left engine cover 53
3. Remove the air inlet cover 54
4. Replace the air inlet filter 54
5. Remove the air filter housing 54
6. Replace Air filter element 55
7. Inspection air filter waste oil pipe 55
8. Reinstall 55
D125 Air filter (filter element), air inlet filter element 56
1. Support the vehicle firmly 56
2. Remove the left engine cover 56
3. Replace the air inlet filter 56
4. Remove the air filter housing 57
5. Replace Air filter element 57
6. Inspection air filter waste oil pipe 57
7. Reinstall 57
D125(2024)/D155 Air filter (filter element), air inlet filter element 58
1. Support the vehicle firmly 58
2. Remove the left engine cover 58
3. Remove the air intake cover 58
4. Replace the air inlet filter element 59
5. Replace Air filter element 59
6. Inspection air filter waste oil pipe 59
7. Reinstall 59
D250 Air filter (filter element), air inlet filter element 60
1. Support the vehicle firmly 60
2. Remove the left engine cover 60
3. Remove the air inlet cover 60
4. Replace the air inlet filter 61
5. Remove the air filter housing 61
6. Replace Air filter element 61
7. Inspection air filter waste oil pipe 61
8. Reinstall 61
368D (ETC) Air Filter (Filter Element), Intake Air Filter Elemen 62
1、Securely support the vehicle 62
2、Remove the left engine cover 63
3、Replace the air inlet filter 63
4、Remove the air filter housing 63
5、Replace the air filter element 63
6、Check the air filter oil drain pipe 64
7、Reinstall 64
Bolts and nuts of muffler 65
1. Check for air leaks at the engine exhaust. 65
2. Check for nut and bolts at the muffler 65

Spark plug 67
1. Disassemble the spark plug 67
D350/D250/D368 67
D125/D125(2024)/D155 69
2.Check the spark plug 69
D350/D250/D368 69
D125 69
D125(2024)/D155 69
3. Refer to the steps to remove the spark plug to restore all parts. 70
Engine oil 70
D350/368/368（ETC） 70
1、Drain engine oil 70
2、Replace the fine filter 70
3、Add engine oil 71
4、Change the gearbox oil 72
5、Check the oil level 72
D125/D125(2024)/D155 73
1. Drain the oil 73
2. Replace fine filter 73
3. Add oil 73
4. Change gear box oil 74
5. Confirm the oil level 74
D250 74
1. Drain the oil 74
2. Replace fine filter 74
3. Add oil 75
4. Change gear box oil 75
5. Confirm the oil level 76
D368/350/250 Throttle valve body 76
1. Do not dismantle the throttle body to clean up carbon deposits 76
2. Remove the stepper motor and clean up carbon deposits 76
3. Remove the throttle valve body assembly to clean up carbon deposits 77
4. Disassemble the sensor 78
5. Throttle valve body troubleshooting process 78
D125/D125(2024)/D155 Throttle valve body 79
1. Do not dismantle the throttle body to clean up carbon deposits 79
2. Remove the stepper motor and clean up carbon deposits 79
3. Remove the throttle valve body assembly to clean up carbon deposits 80
4. Disassemble the sensor 80
5. Throttle valve body troubleshooting process 81
Throttle cable 81
1. Inspection 81
368D（ETC） 81
2. Adjust the throttle cable clearance 81
3. Lube door cable 82
4.368D（ETC） 82
Idle speed 82
Check idle speed: 82
Fuel evaporative pollutant control system 84
D368 (ETC) Fuel evaporation 84
D368 fuel evaporation 85
D350/D250 fuel evaporation 86
D125/D125(2024)/D155 fuel evaporation 86
Radiator 87
1. Check the coolant 87
2. Add coolant (antifreeze) to the Coolant expansion tank 87
3.D368/350/250 Add coolant to the Radiator 87
4. Put coolant 88
D350/D250/D368 88
D125/D155 88

5. Check whether the fins of the radiator water tank are deformed or the air duct is blocked 89
D350/D250/D368 89
D125/D155 89
6. Check all water pipes for leaks; aging. 90
D350/D250/D368 90
D125 91
Fuel pipe 92
1. Check the fuel pipe for leaks with the help of an endoscope with LED light 92
2. Replace high pressure oil pipe 92
3. Fuel pump 93
3.1 Use oil pressure gauge to measure fuel pressure 93
3.2 Simple test of fuel pump 94
4. Treatment of abnormal fuel pressure 94
Braking System 95
D350/D250 Braking system component diagram: 95
D368 Braking system component diagram: 96
D125 Braking system component diagram: 96
D125(2024)/D155 Braking system component diagram: 97
1. Check the brake components 98
2. Check the front and rear brake switches 99
2.1 Check the brake switch 99
2.2 Replace the brake switch 99
3. Lubricate the movable parts of the brake handle 99
3.1 Lubricate the front brake handle. 99
3.2 After lubricating the brake handle 99
3.3 Replacing the brake handle 100
4. Adjust the brake handle 100
5. Replace the brake pads 100
5.1 Replace the front brake pads 100
D350/D250/D368 100
D125/D125(2024)/D155 101
5.2 Replace the rear brake pads 101
5.3 Abnormal sound of brake pads 102
6. Replace the brake disc 102
6.1 Replacing the front brake disc 102
6.2 Replacing the rear brake disc 102
Brake hose 104
Brake fluid 104
1. Add brake fluid to the main pumps of the front and rear disc brakes 104
2. Replace the brake fluid 104
2.1 Replace the front brake brake fluid 104
2.2 Replace the rear brake fluid 105
3. Brake system exhaust 105
Tire 105
1. Check the tires 106
2. Replace tires 106
Steering mechanism 106
1. Check the steering mechanism 106
2. Adjust the steering mechanism 107
D350/D250/D368 107
D125/D125(2024)/D155 107
3. Maintain steering bearings 108
4. Malfunction 108
Front fork 108
1. Check the appearance 108
2. Check the shock absorption performance 109
3. Remove the front shock absorption 109
4. Correct the front fork tube 109
5. Troubleshooting 109
Rear shock absorption 109
1. Check 109

2. Adjust the preload 110
2.1 Adjust the right rear shock absorption 110
D125/D125(2024)/D155 110
D350/D250/D368 110
2.2 Adjust the left rear shock absorption 110
3. Replace the shock absorption 110
Bolts and nuts for body and engine installation 111
1. Check the fasteners for the critical parts 111
2. Check engine fasteners 111
D350/D368 111
D125 112
D350(2023)/D250 112
D125(2024)/D155 112
Side bracket 112
1. Check 113
2. Lubrication 113
Main bracket 113
1. Check 114
2. Lubrication 114
3. Install the main bracket 114
4. Replace the return spring post of the main support 114
Sound, light, and electrical device Inspection 114
1. Check 114
2. Headlight height adjustment 116
3.Fuse box 117
4. Troubleshooting 118
4.1 Right hand switch 118
4.2 Right hand handle vice switch 118
4.3Left hand handle auxiliary switch 119
4.4 Horn 119
4.5 Left hand switch 120
4.6 Light 121
4.7 Windshield failure 121
3. EFI system 122
Know Before Service 122
Error code 123
1.Read the fault code through the meter 123
2. Read the fault code through the diagnostic tool 123
3. Error code 124
4. Clear fault code 124
4.1 Manually clear 126
4.2 Use the diagnostic tool to clear 126
EFI parts layout 127
Fault diagnosis and elimination of EFI parts 127
1. Dump switch 127
2. OBD port 128
3. Fuel pump 128
4. Carbon canister solenoid valve 128
5. EFI relay 129
6. Fuel injector 129
7. Ignition coils 129
D350/D368 130
D125/D155/D250 130
8. Throttle valve body 131
8.1 Common failure phenomena 131
8.2 Disassembly 131
8.3Troubleshooting process 131
8.4 Sensor 131
9. Water and oil shared sensor 131
10. Oxygen Sensor 132
10.1 Check 132

10.2 Replace 132
D350/D368 132
D125/D250/D155 132
11. ECU 133
D350/D250/D368 133
D125/D155 133
12. Crankshaft position sensor 133
13. Starting relay (D155) 134
14. Relay (G8HN-1C4T-RJ) (D155) 134
The engine cannot start and there is no sign of fault diagnosis process 135
The engine cannot be started and there is a car symptom fault diagnosis process 135
Poor acceleration 136
High idling speed of hot car 136
Unsteady idle speed of cooling car 136
Unsteady idling, easy to cutoff 137
Analysis flow chart of EFI failure indicator light always on 138
Electrical schematic diagram of EFI system 139
4. Ignition system 140
Know Before Service 140
Troubleshooting 141
Ignition system layout 142
Electrical schematic diagram of ignition system 142
Ignition system inspection 143
Ignition timing 143
Ignition coils 144
5. Starting system 145
Know Before Service 145
Troubleshooting 145
1. Starting relay 145
2. Starter motor 146
3. The starter motor runs slowly 146
4. The starter motor is working normally, but the engine cannot be started 146
Ignition system layout 146
Starting system electrical schematic diagram 147
D368/D350/D250/D125 147
D155 148
Starter motor 149
1. Remove the starter motor 149
2. Disassemble the starter motor 149
Examination 150
Starter motor front cover： 150
Motor back cover： 150
Denki： 151
D368/D350/D125/D250Check the starting relay 151
1. Operation check 151
2. Check the relay coil 151
2.1 Input line 151
2.2 Ground wire 151
3. Check the starting relay 151
4. Disassembly and assembly of the starting relay 151
D155 start relay 152
1. Starting relay 152
2. Start-stop controller 152
6. Fuel supply system 153
Know Before Service 153
Fuel tank removal 153
1. Disassemble the fuel tank assembly 153
2. Disassemble the fuel pump 154
4. Remove the external parts of the fuel tank assembly. 155
Examination 155
1. Fuel pressure test 155

2. Fuel pump inspection 155
3. Oil level sensor 155
7. Cooling system 156
Know Before Service 156
Troubleshooting 156
1. The engine temperature is too high: 156
2. The engine temperature is too low: 156
3. Coolant leakage 156
Coolant system distribution map 157
D368/D350/D250 157
D125/D155 157
Coolant flow diagram 159
D368/D350/D250 160
D125/D155 161
Cooling system disassembly 162
D125/D155 Remove the radiator assembly 162
D368/D350/D250 Remove the radiator assembly 162
D368/D350/D250 Coolant system hoop/clamp distribution map 164
D368/D350 Thermostat assembly and small loop 164
Cooling system accessories 166
1.D368/D350/D250 Main water tank 166
2. D368/D350/D250 Attention to the water tank filling port 167
2.1 Overall tightness inspection 167
2.2 Pressure relief valve inspection 167
3. Auxiliary water tank 167
4. Water and oil shared sensor 167
5. Thermostat 168
5.1 Inspection 168
5.2 Failure phenomenon 168
5.3 Disassembly 168
5.4 Thermostat core inspection 169
6. Water pipe 169
7. Check the water pump cover assembly 169
8. Braking system 170
Know Before Service 170
Trouble shooting 171
Soft feeling from brake lever 171
Hard feeling from brake lever 171
Disassemble the disc brake main pump and calipers 171
Disassemble the front disc brake main pump 171
Disassemble the rear disc brake main pump 172
Disassemble the front disc brake caliper 172
D350/D250/D368 172
D125/D155 172
Disassemble the rear disc brake caliper 173
Brake hose and wheel speed sensor 174
Check the gap between the wheel speed sensor and the induction ring gear 174
Remove the brake hose and wheel speed sensor 174
Release brake fluid 174
FMC-HU and RMC-HU 175
FC-HU and wheel speed sensor (front wheel) 175
RC-HU and wheel speed sensor (rear wheel) 175
ABS system layout 176
ABS hydraulic control unit 177
Disassemble 177
ABS troubleshooting 178
9. Battery/charging system 179
Know Before Service 179
Troubleshooting 180
Charging system layout diagram 181
Electrical schematic diagram 182

D368/D350/D250/D125 182
D155 182
Battery disassembly 183
1. Disassembly 183
2. Check 183
3. Charging 183
Charging system check 183
1. Leakage test 183
2. Check the charging voltage 183
3. Inspection of magneto stator charging coil 183
D368/D350/125/250 Remove the rectifier 184
D155 Remove the start-stop controller 184
10. Front fork assembly 185
Know Before Service 185
Exploded view of front fork components: 186
D368/D350/D250 Directional exploded view 186
D125 Directional exploded view 187
D125(2024)/D155 188
Front fork exploded view 189
D350/D250/D368 189
D125/D155 190
Exploded view of lower link board 191
D350/D250/D368 191
D125 192
D125(2024)/D155 193
Change the direction of the handle 194
1. Remove the direction of the handle 194
2. Remove the components 194
3. Installation of the direction component 195
4. Installation of the direction handle cover 195
Replace the front wheel 196
1. Remove the front wheel assembly 196
2. Install the front wheel assembly 196
Front wheel assembly exploded view: 197
D368 197
D350/D250 197
D125/D155 198
Inspection and maintenance of front wheel assembly： 199
1. Disc brake 199
1.1 The service life of the disc brake disc 199
1.2 Disc brake Replacement method 199
2. Front wheel oil seals and bearings 199
2.1 Service life of front wheel oil seals and bearings 199
2.2 Replacement method of front wheel oil seal and bearing 199
3. Front wheel rims and tires 199
3.1 The service life of the front wheel rim and tire 199
3.2 How to replace the front wheel rim and tire 199
3.3 Dynamic balance 200
D368/D350/D250 replacement of the front shock absorber 200
1. Disassemble the front wheel and front fender assembly 200
2. Remove the left and right front shock absorbers 200
3. Reinstall the shock absorber, front fender, front wheel and other components 201
D125/D155 replacement of the front shock absorber 201
1. Disassemble the front wheel and front fender assembly 201
2. Remove the left and right front shock absorbers 202
3. Reinstall the shock absorber, front fender, front wheel and other components 202
Replace the lower link board 202
1. Disassemble parts ahead of time 202
2. Remove the faucet lock 202
3. Removing the direction pad 203

D350/D250/D368 203
D125/D155 203
4. Remove the lower link board assembly 203
5. Install the lower link board assembly 204
D350/D250/D368 204
D125/D155 204
6. Install other disassembly components 204
11.Disassemble the engine of the vehicle 205
1. Disassemble the storage box 205
2. Remove the cover 205
3. Put the coolant and pull out the 206
D368/D350 206
D155 208
4. Disassemble the engine 209
D368/D350 209
D125/D155 209
D250 210
5. Install the engine 211
D368/D350 211
D125/D155 211
D250 212
12. Disassembly and assembly of vehicle covering parts 214
Disassembly and assembly of vehicle panel 216
Windshield removal 216
Removal of the front sun visor 216
Removal of the front cover and the front panel 216
Disassembly of the left &right side cover 217
Disassembly of the cushion 217
Disassembly of the storage box 217
Disassembly of the left, right fuel tank cover 218
Removal of the front left and right panels 218
Disassembly of the of the Speedometer panel 218
Removal of front left and right panel bottom lining 219
Disassembly of headlights 219
Removal of windshield base 220
Disassembly the middle cover of the fuel tank 221
Disassembly the left and right storage boxes 222
Removal of front storage box panel 222
Removal of left and right pedals and surrounding left and right parts 223
Disassembly of the surrounding bottom 224
Removal of the surrounding middle part 224
Radiator Deflector Removal 224
Disassembly of the rear hand rest 224
Removal of tail skirt and tail lamp 225
Removal of rear mud flap 225
Removing the pke. 226

1. Vehicle information

Know Before Service

1. Use good quality tools, or special tools and fixtures designed by our company. The use of inferior tools may cause damage to parts, peeling of plating, improper assembly, etc.
2. The O-rings, paper gaskets, copper gaskets, and component sealing rings used for sealing must be replaced before assembling.
3. Fasteners with torque requirements need to use a torque wrench to check the torque; if the torque is not required, refer to the general torque value recommended by general fasteners.
4. Clean up before assembly; after assembly, check whether the assembly is correct and in place.
5. The vehicle should be parked balanced and pay attention to safety during disassembly and assembly. Including but not limited to the use of electric tools, hand tools, pneumatic tools, hydraulic tools, handling; prevent contact with skin, eyes, burns, etc.
6. The replaced oils, liquids, batteries, etc. must be recycled and handed over to qualified institutions for disposal; it is forbidden to dump them at will to pollute the environment or water sources.
7. Swallowing or inhaling coolant, brake fluid, etc. will cause certain harm to the human body. Any exposed skin such as hands and face should be cleaned thoroughly after each addition. If swallowed by mistake, immediately contact the poison control center or hospital; if inhaled, please immediately go to a ventilated environment. If it accidentally splashes into the eyes, immediately rinse the eyes with a large amount of running water and seek medical advice or consultation in time. Keep away from children and pets.
8.If your D350 vehicle is constructed of M6×16 bolts + flange bushings + flange bushing seating rubber, you can use the M6×14 axle shoulder hexagonal bolts instead. Similar explanations will not be repeated in subsequent sections of this manual.

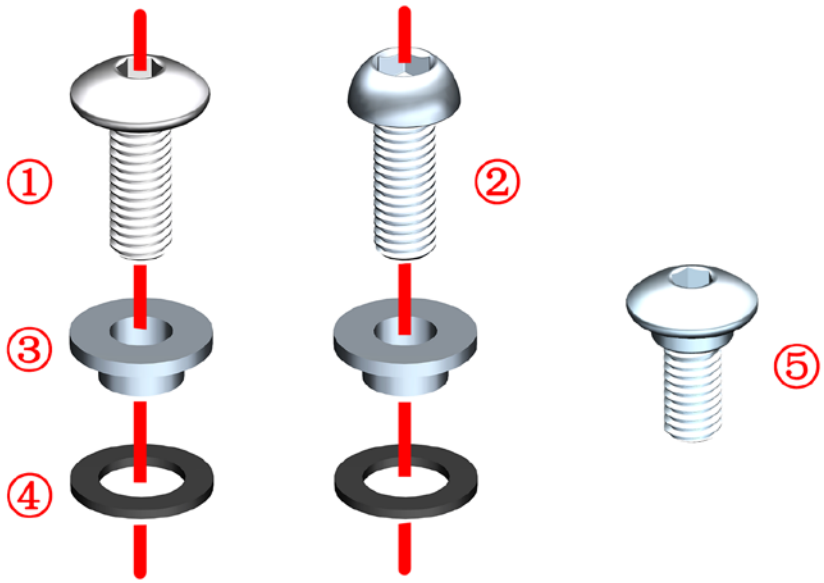

①:1251100-102000 非标螺栓M6×16（304不锈钢）
Non-standard bolt M6×16 (304 stainless steel)
②:1251100-120093 非标螺栓M6×16（环保彩）
Non-standard bolts M6×16 (environmental color)
③:1274100-057095 翻边衬套φ6.2×φ8.4×3.5＋φ14×1.5
Flanging bushing φ6.2×φ8.4×3.5＋φ14×1.5
④:1244100-052000 翻边衬套缓冲胶（φ8.5×φ14×1）
Buffer rubber of flanging bushing (φ8.5×φ14×1)
⑤:1251100-328000 内六角轴肩螺丝 M6×14+8.5×3 SUS302
Hexagon socket head screw M6×14+8.5×3 SUS302

Only part of the basic requirements for matters needing attention, prevention of accidental injury, etc. can be listed; it is not possible to list all situations in detail. Be vigilant during disassembly and assembly to prevent accidents.

Body label

① The vehicle identification code VIN can be seen after opening the seat cushion, and the VIN code is engraved on the cross tube at the rear of the frame.
② The muffler code is on the inner side above the muffler.
③ The nameplate is above the radiator.
④The engine identification code is engraved on the left crankcase.
⑤The storage box warning label is pasted on the front of the storage box.
Remarks: Different rows of nameplate, muffler code and warning paste content is different.The figure below is illustrated by D350.







D368 Technical specification

Item		Specification	
Vehicle	Front tire specification	120/70－15 CM576 56S	
	Rear tire specification	140/70－14 CM577 68S	
	Front rim specification	MT:3.5×15	
	Rear rim specification	MT:3.75×14	
	Brake fluid	DOT4 0.25L（0.07 US gal,0.06 Imp gal）	
	Oil consumption	Replace fine filter：	1.75L（0.46 US gal,0.39 Imp gal）
		Without replacing the fine filter：	1.55L（0.41 US gal,0.34 Imp gal）
	Gearbox oil consumption	0.23L（0.06 US gal,0.05 Imp gal）	
Engine	Fuel oil	95 and above	
	Idle speed (r/min)	1600±100	
Spark plug	Spark plug model	LMAR8A－9	
	Gap	0.8～0.9mm(0.031～0.035 in)	
	Resistance (kΩ)	3～7.5	
Cooling system	Total amount of coolant	1.44L（0.38 US gal,0.32 Imp gal）	
	Thermostat opening temperature	80～84℃(176～183.2F)	
	Thermostat fully open temperature	95℃(203F)	
	Thermostat opening stroke	≥3.5mm (0.13 in)	
	Coolant type	Ethylene glycol + distilled water	

Front wheel/steering system

Item		Standard	Limit
Tread depth		-	≥1.6mm (0.063 in)
Normal temperature standard tire pressure		240kPa(2.45 kgf/cm^2,34.8 PSI)	-
Front wheel rim runout	Radial	-	1.5mm (0.006 in)
	Axial	-	1.5mm (0.006 in)

Rear wheel/suspension system

Item		Standard	Limit
Tread depth		-	≥1.6mm (0.063 in)
Normal temperature standard tire pressure		260kPa (2.7 kgf/cm^2,37.7 PSI)	-
Rear wheel rim runout	Radial	-	1.5mm (0.006 in)
	Axial	-	1.5mm (0.006 in)
V belt 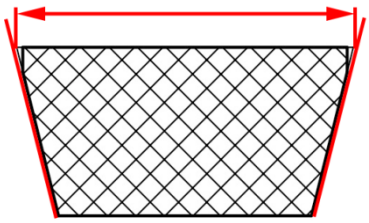	Top width（1）	27.8mm(1.094 in)	≥26.8mm(1.055 in)
Standard position of rear shock absorber and preload regulator		Fourth gear	-

Brake system

Item		Standard	Limit
Front brake disc	Brake fluid	DOT4	-
	Brake pad use limit	-	Trough bottom
	Brake disc thickness	≥5.0mm(0.197 in)	＜4.5mm(0.177in)
Rear brake disc	Brake fluid	DOT4	-
	Brake pad use limit	-	Trough bottom
	Brake disc thickness	≥4.5mm(0.177 in)	＜4.0mm(0.157 in)

Battery/charging system

Item			Standard
Battery	Type		YTX12 - BS
	Capacity		12Ah
	Battery self-discharge current		1.1mA average
	Voltage	Full	13.1～13.3V
		Charging voltage required for unloaded bike	≤12.8V
		Charging voltage required for loading	≤12V
	Constant voltage charging mode	Constant voltage range	14.4～14.8V
		Initial charging current	0.1～0.2 times the battery capacity
		Charging time	6～24 hours
	Constant current charging mode	Maximum charging current	0.1 times the battery capacity
		Charging time	5～8 hours
		Charging current × charging time must be controlled within the current range of 0.5 to 0.8 times the battery capacity	

D350 Technical specification

Item		Specification	
Vehicle	Front tire specification	120/70－15 CM576 56S	
	Rear tire specification	140/70－14 CM577 68S	
	Front rim specification	MT:3.5×15	
	Rear rim specification	MT:3.75×14	
	Brake fluid	DOT4 0.25L（0.07 US gal,0.06 lmp gal）	
	Oil consumption	Replace fine filter：	1.75L（0.46 US gal,0.39 lmp gal）
		Without replacing the fine filter：	1.55L（0.41 US gal,0.34 lmp gal）
	Gearbox oil consumption	0.23L（0.06 US gal,0.05 lmp gal）	
Engine	Fuel oil	95 and above	
	Idle speed (r/min)	1600±100	
Spark plug	Spark plug model	LMAR8A－9	
	Gap	0.8～0.9mm(0.031～0.035 in)	
	Resistance (kΩ)	3～7.5	
Cooling system	Total amount of coolant	1.44L（0.38 US gal,0.32 lmp gal）	
	Thermostat opening temperature	80～84℃(176～183.2F)	
	Thermostat fully open temperature	95℃(203F)	
	Thermostat opening stroke	≥3.5mm (0.13 in)	
	Coolant type	Ethylene glycol + distilled water	

Front wheel/steering system

Item		Standard	Limit
Tread depth		-	≥1.6mm (0.063 in)
Normal temperature standard tire pressure		240kPa(2.45 kgf/cm^2,34.8 PSI)	-
Front wheel rim runout	Radial	-	1.5mm (0.006 in)
	Axial	-	1.5mm (0.006 in)

Rear wheel/suspension system

Item			Standard	Limit
Tread depth			-	≥1.6mm (0.063 in)
Normal temperature standard tire pressure			260kPa (2.7 kgf/cm^2,37.7 PSI)	-
Rear wheel rim runout	Radial		-	1.5mm (0.006 in)
	Axial		-	1.5mm (0.006 in)
V belt		Top width（1）	27.8mm(1.094 in)	≥26.8mm(1.055 in)

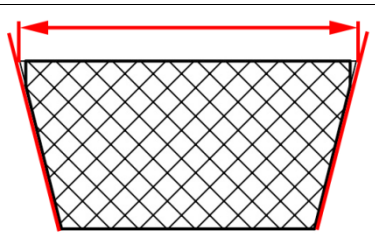			
Standard position of rear shock absorber and preload regulator		Fourth gear	-

Brake system

Item		Standard	Limit
Front brake disc	Brake fluid	DOT4	-
	Brake pad use limit	-	Trough bottom
	Brake disc thickness	≥5.0mm(0.197 in)	＜4.5mm(0.177in)
Rear brake disc	Brake fluid	DOT4	-
	Brake pad use limit	-	Trough bottom
	Brake disc thickness	≥4.5mm(0.177 in)	＜4.0mm(0.157 in)

Battery/charging system

Item			Standard
Battery	Type		YTX12 - BS
	Capacity		12Ah
	Battery self-discharge current		1.1mA average
	Voltage	Full	13.1～13.3V
		Charging voltage required for unloaded bike	≤12.8V
		Charging voltage required for loading	≤12V
	Constant voltage charging mode	Constant voltage range	14.4～14.8V
		Initial charging current	0.1～0.2 times the battery capacity
		Charging time	6～24 hours
	Constant current charging mode	Maximum charging current	0.1 times the battery capacity
		Charging time	5～8 hours
		Charging current × charging time must be controlled within the current range of 0.5 to 0.8 times the battery capacity	

Lamp/Speedometer/switch description

Item			Specification
Light（LED）	Front headlight	High beam	12V～45W
		Low beam	12V～30W
	Front position light		3W
	Front turn signal		2.5W
	Rear turn signal		2.8W
	License plate light		0.5W
	Brake lights/tail lights		11/5.2W
	Storage box atmosphere light		0.2W
Insurance	Main insurance		25A
	ECM		15A
	ABS hydraulic control unit motor		15A
	Hydraulic control unit ECU		10A
	Lights		15A
	Regular power supply		15A
	spare		15A
Water temperature sensor	Room temperature		1.5～4.0 KΩ

D125/D125(2024) Technical specification

Item		Specification	
Vehicle	Front tire specification	100/80－14 CM576 48P	
	Rear tire specification	120/70－14 CM577 61P	
	Front rim specification	MT:2.5×14	
	Rear rim specification	MT:3.5×14	
	Brake fluid	DOT4 0.23L（0.06 US gal,0.05 lmp gal）	
	Oil consumption	Replace fine filter：	0.95L（0.25 US gal,0.21 lmp gal）
		Without replacing the fine filter：	0.9L（0.24 US gal,0.2 lmp gal）
	Gearbox oil consumption	0.16L（0.04 US gal,0.04 lmp gal）	
Engine	Idle speed (r/min)	1500±100	
	Fuel oil	95 and above	
Spark plug	Spark plug model	TORCH CR8EI/ CPR8EA－9(2024)	
	Gap	0.7～0.9mm(0.028～0.035 in)	
	Resistance (kΩ)	3～7.5	
Cooling system	Total amount of coolant	0.78L（0.21 US gal,0.17 lmp gal）	
	Thermostat opening temperature	80～84℃(176～183.2F)	
	Thermostat fully open temperature	95℃(203F)	
	Thermostat opening stroke	≥3.5mm (0.13 in)	
	Coolant type	Ethylene glycol + distilled water	

Front wheel/steering system

Item		Standard	Limit
Tread depth		-	≥1.6mm (0.063 in)
Normal temperature standard tire pressure		220kPa (2.24 kgf/cm^2, 32 PSI)	-
Front wheel rim runout	Radial	-	1.5mm (0.006 in)
	Axial	-	1.5mm (0.006 in)

Rear wheel/suspension system

Item		Standard	Limit
Tread depth		-	≥1.6mm (0.063 in)
Normal temperature standard tire pressure		270kPa (2.75 kgf/cm^2,39 PSI)	-
Rear wheel rim runout	Radial	-	1.5mm (0.006 in)
	Axial	-	1.5mm (0.006 in)
V belt 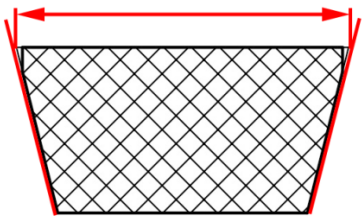	Top width	25.3mm (0.996 in)	≥24.3mm (0.957 in)
Standard position of rear shock absorber and preload regulator		Third gear	-

Brake system

Item		Standard	Limit
Front brake disc	Brake fluid	DOT4	-
	Brake pad use limit	-	Trough bottom
	Brake disc thickness	≥4.0mm (0.16 in)	＜4.0mm(0.16 in)
Rear brake disc	Brake fluid	DOT4	-
	Brake pad use limit	-	Trough bottom
	Brake disc thickness	≥4.0mm (0.16 in)	＜4.0mm(0.16 in)

Battery/charging system

Item			Standard
Battery	Type		6－FM－7L
	Capacity		7Ah
	Battery self-discharge current		1.1mA average
	Voltage	Full	13.1～13.3V
		Charging voltage required for unloaded bike	≤12.8V
		Charging voltage required for loading	≤12V
	Constant voltage charging mode	Constant voltage range	14.4～14.8V
		Initial charging current	0.1～0.2 times the battery capacity
		Charging time	6～24 hours
	Constant current charging mode	Maximum charging current	0.1 times the battery capacity
		Charging time	5～8 hours
		Charging current × charging time must be controlled within the current range of 0.5 to 0.8 times the battery capacity	

D155 Technical specification

Item		Specification	
Vehicle	Front tire specification	100/80－14 CM576 48P	
	Rear tire specification	120/70－14 CM577 61P	
	Front rim specification	MT:2.5×14	
	Rear rim specification	MT:3.5×14	
	Brake fluid	DOT4 0.23L（0.06 US gal,0.05 lmp gal）	
	Oil consumption	Replace fine filter：	0.95L（0.25 US gal,0.21 lmp gal）
		Without replacing the fine filter：	0.9L（0.24 US gal,0.2 lmp gal）
	Gearbox oil consumption	0.16L（0.04 US gal,0.04 lmp gal）	
Engine	Idle speed (r/min)	1500±100	
	Fuel oil	95 and above	
Spark plug	Spark plug model	CPR8EA－9	
	Gap	0.7～0.9mm(0.028～0.035 in)	
	Resistance (kΩ)	3～7.5	
Cooling system	Total amount of coolant	0.78L（0.21 US gal,0.17 lmp gal）	
	Thermostat opening temperature	80～84℃(176～183.2F)	
	Thermostat fully open temperature	95℃(203F)	
	Thermostat opening stroke	≥3.5mm (0.13 in)	
	Coolant type	Ethylene glycol + distilled water	

Front wheel/steering system

Item		Standard	Limit
Tread depth		-	≥1.6mm (0.063 in)
Normal temperature standard tire pressure		220kPa (2.24 kgf/cm^2, 32 PSI)	-
Front wheel rim runout	Radial	-	1.5mm (0.006 in)
	Axial	-	1.5mm (0.006 in)

Rear wheel/suspension system

Item		Standard	Limit
Tread depth		-	≥1.6mm (0.063 in)
Normal temperature standard tire pressure		270kPa (2.75 kgf/cm^2,39 PSI)	-
Rear wheel rim runout	Radial	-	1.5mm (0.006 in)
	Axial	-	1.5mm (0.006 in)
V belt 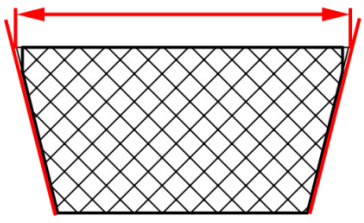	Top width	25.3mm (0.996 in)	≥24.3mm (0.957 in)
Standard position of rear shock absorber and preload regulator		Third gear	-

Brake system

Item		Standard	Limit
Front brake disc	Brake fluid	DOT4	-
	Brake pad use limit	-	Trough bottom
	Brake disc thickness	≥4.0mm (0.16 in)	＜4.0mm(0.16 in)
Rear brake disc	Brake fluid	DOT4	-
	Brake pad use limit	-	Trough bottom
	Brake disc thickness	≥4.0mm (0.16 in)	＜4.0mm(0.16 in)

Battery/charging system

Item			Standard
Battery	Type		YTX12 - BS
	Capacity		12Ah
	Battery self-discharge current		1.1mA average
	Voltage	Full	13.1～13.3V
		Charging voltage required for unloaded bike	≤12.8V
		Charging voltage required for loading	≤12V
	Constant voltage charging mode	Constant voltage range	14.4～14.8V
		Initial charging current	0.1～0.2 times the battery capacity
		Charging time	6～24 hours
	Constant current charging mode	Maximum charging current	0.1 times the battery capacity
		Charging time	5～8 hours
		Charging current × charging time must be controlled within the current range of 0.5 to 0.8 times the battery capacity	

D250 Technical specification

Item		Specification	
Vehicle	Front tire specification	120/70－15 CM576 56S	
	Rear tire specification	140/70－14 CM577 68S	
	Front rim specification	MT:3.5×15	
	Rear rim specification	MT:3.75×14	
	Brake fluid	DOT4 0.25L（0.07 US gal,0.06 Imp gal）	
	Oil consumption	Replace fine filter：	1.75L（0.46 US gal,0.39 Imp gal）
		Without replacing the fine filter：	1.7L（0.41 US gal,0.34 Imp gal）
	Gearbox oil consumption	0.2L（0.05 US gal,0.04 Imp gal）	
Engine	Fuel oil	95 and above	
	Idle speed (r/min)	1600±100	
Spark plug	Spark plug model	LMAR8A－9	
	Gap	0.8～0.9mm(0.031～0.035 in)	
	Resistance (kΩ)	3～7.5	
Cooling system	Total amount of coolant	1.34L（0.35 US gal,0.29 Imp gal）	
	Thermostat opening temperature	80～84℃(176～183.2F)	
	Thermostat fully open temperature	95℃(203F)	
	Thermostat opening stroke	≥3.5mm (0.13 in)	
	Coolant type	Ethylene glycol + distilled water	

Front wheel/steering system

Item		Standard	Limit
Tread depth		-	≥1.6mm (0.063 in)
Normal temperature standard tire pressure		240kPa(2.45 kgf/cm^2,34.8 PSI)	-
Front wheel rim runout	Radial	-	1.5mm (0.006 in)
	Axial	-	1.5mm (0.006 in)

Rear wheel/suspension system

Item		Standard	Limit
Tread depth		-	≥1.6mm (0.063 in)
Normal temperature standard tire pressure		260kPa (2.7 kgf/cm^2,37.7 PSI)	-
Rear wheel rim runout	Radial	-	1.5mm (0.006 in)
	Axial	-	1.5mm (0.006 in)
V belt 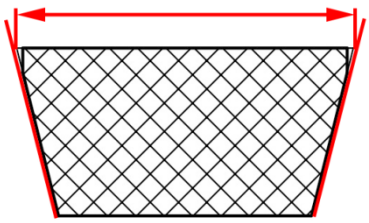	Top width（1）	26.4mm(1.094 in)	≥25.4mm(1.055 in)
Standard position of rear shock absorber and preload regulator		Fourth gear	-

Brake system

Item		Standard	Limit
Front brake disc	Brake fluid	DOT4	-
	Brake pad use limit	-	Trough bottom
	Brake disc thickness	≥5.0mm(0.197 in)	＜4.5mm(0.177in)
Rear brake disc	Brake fluid	DOT4	-
	Brake pad use limit	-	Trough bottom
	Brake disc thickness	≥4.5mm(0.177 in)	＜4.0mm(0.157 in)

Battery/charging system

Item			Standard
Battery	Type		YTX12 - BS
	Capacity		12Ah
	Battery self-discharge current		1.1mA average
	Voltage	Full	13.1～13.3V
		Charging voltage required for unloaded bike	≤12.8V
		Charging voltage required for loading	≤12V
	Constant voltage charging mode	Constant voltage range	14.4～14.8V
		Initial charging current	0.1～0.2 times the battery capacity
		Charging time	6～24 hours
	Constant current charging mode	Maximum charging current	0.1 times the battery capacity
		Charging time	5～8 hours
		Charging current × charging time must be controlled within the current range of 0.5 to 0.8 times the battery capacity	

Tightening torque

Bolt tightening torque of general tightening part

Intensity level	Grade 4.8-6.8 (mark "4" on the head of the bolt)			Grade 8.8 (mark "7" or "8.8" on the head of the bolt)		
Bolt diameter	Tightening torque range	Standard value	Breaking torque	Tightening torque range	Standard value	Breaking torque
M4	1-2	1.4	/	1.5-3	2.5	/
M5	2-4	2.9	4.5	3-6	4.5	8
M6	4-7	4.9	10	8-12	10	14.5
M8	10-16	12.2	20	18-28	22	34
M10	22-25	24.5	45	40-60	44	76
M12	35-55	43	75	70-100	77	112
M14	50-80	69	123	110-160	124	200
M16	80-130	110	195	170-250	200	300
M18	130-190	150	285	200-280	270	450

Remarks: The connection tightening torque of plastic parts is half of the tightening torque of grade 6.8 bolts

Cable/cable/pipe/electrical device distribution map

1. Distribution map of lamps and lanterns

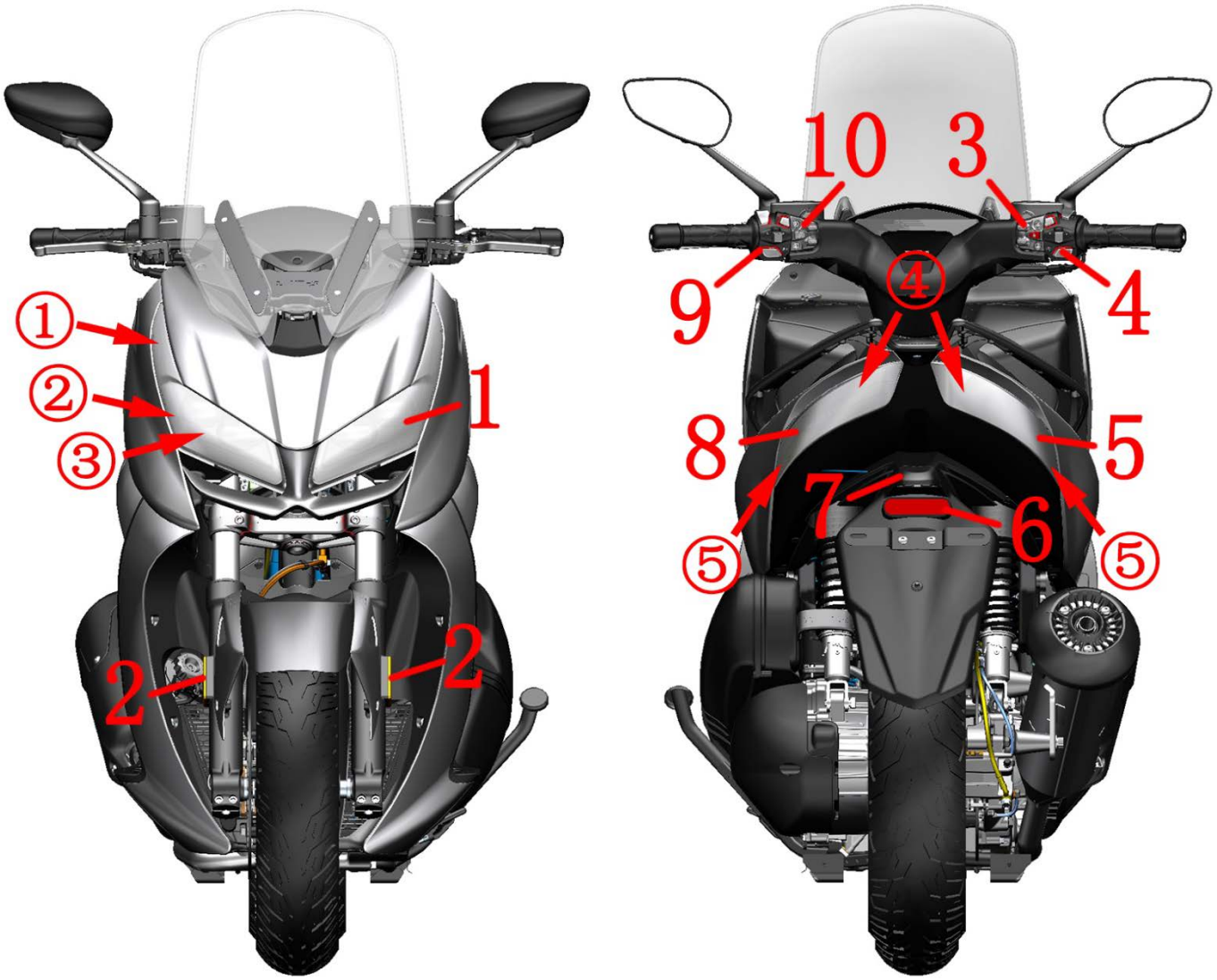

1 - Headlights ((1) - Front turn light position (2) - Position light / daytime running light position (3) - High and low beam position) 2 - Side reflector 3 - Right handlebar auxiliary switch 4 - Right handlebar switch 5 - Right rear turn light ((4) - Position light / brake light position (5) - Rear turn light position) 6 - Rear reflector 7 - License plate light 8 - Left rear turn light ((4) - Brake light / position lamp position (5) - Rear turn light position) 9 - Left handlebar switch 10 - Left handle sub-switch.

2. Throttle cable

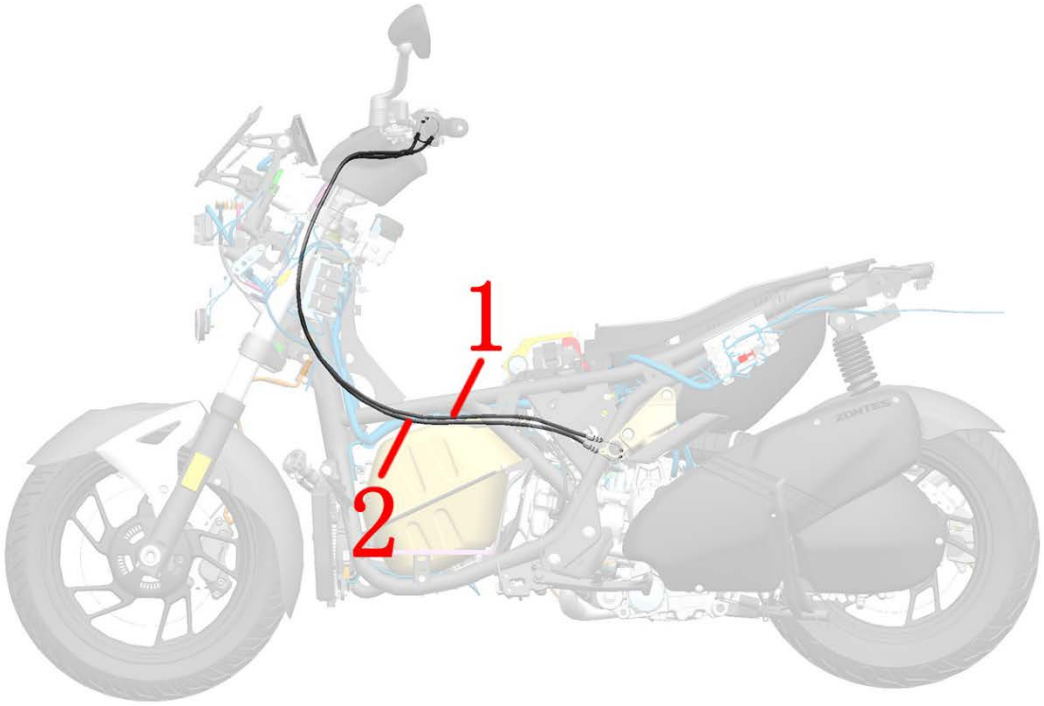

1- Oil return line 2- Fuel line

3. Brake upper pump and brake hose

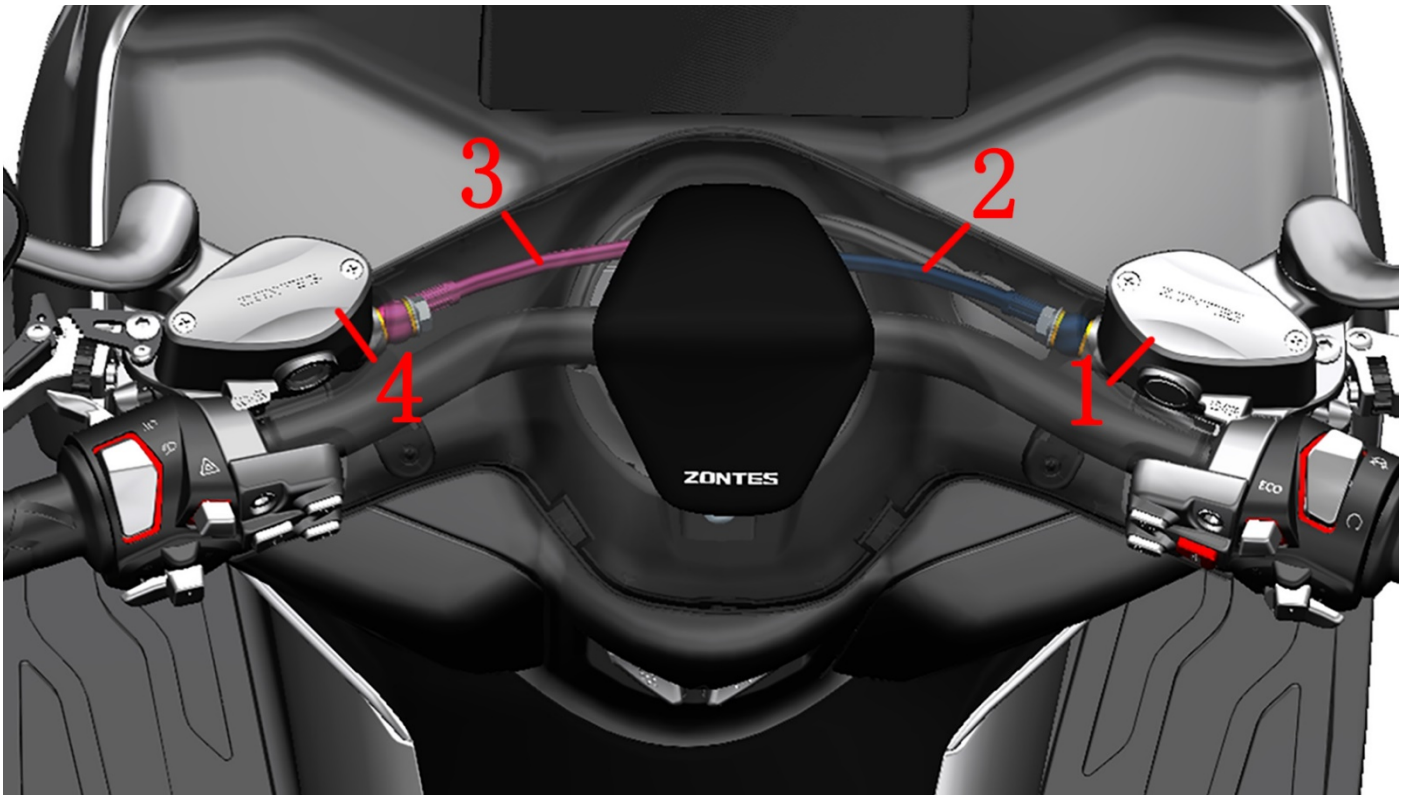

1-Front disc brake main pump 2-FMC-HU brake hose 3-RMC-HU brake hose 4-rear disc brake main pump

4. Calipers, brake hoses and wheel speed sensors



D350/D250

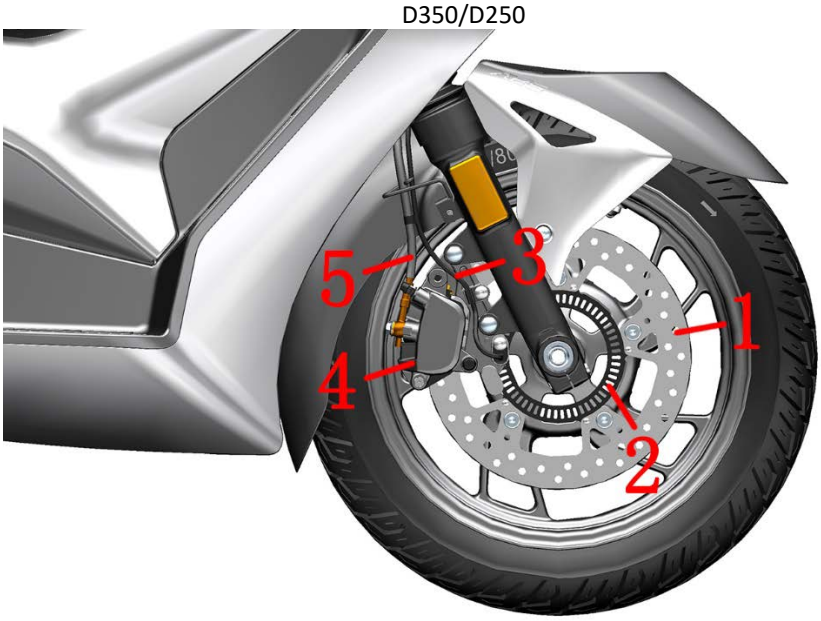

D125

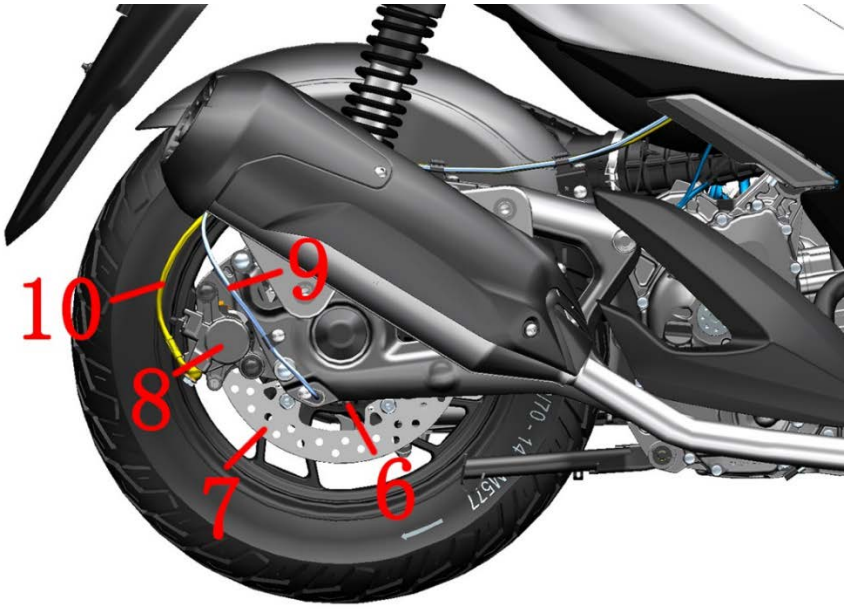

1-brake disc (front) 2- front whell ABS induction ring gear 3-wheel speed sensor (front wheel) 4-front disc brake caliper 5-FC-HU brake hose 6- rear whell ABS induction ring gear 7-brake disc (rear) 8-rear disc brake caliper 9-wheel speed sensor (rear wheel) 10-RC-HU brake hose

5. Distribution map of brake system accessories

5.1 D368/D350/D250

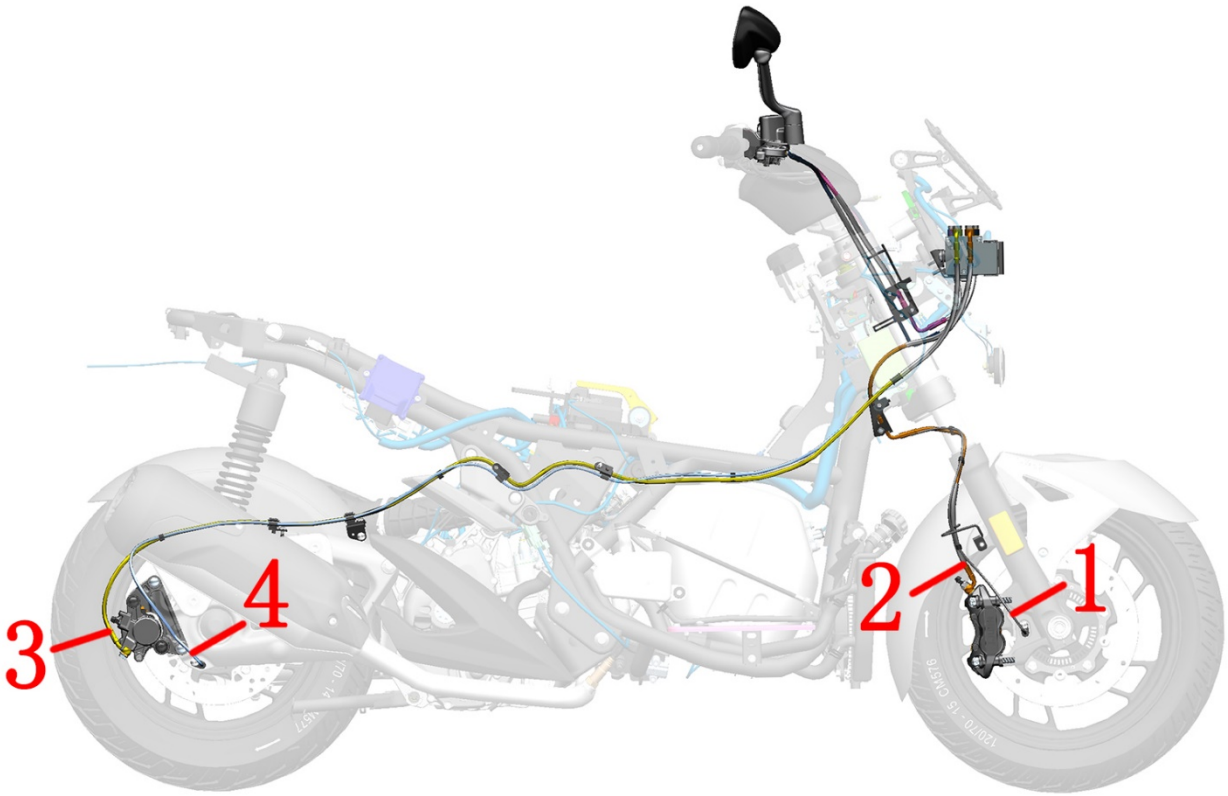

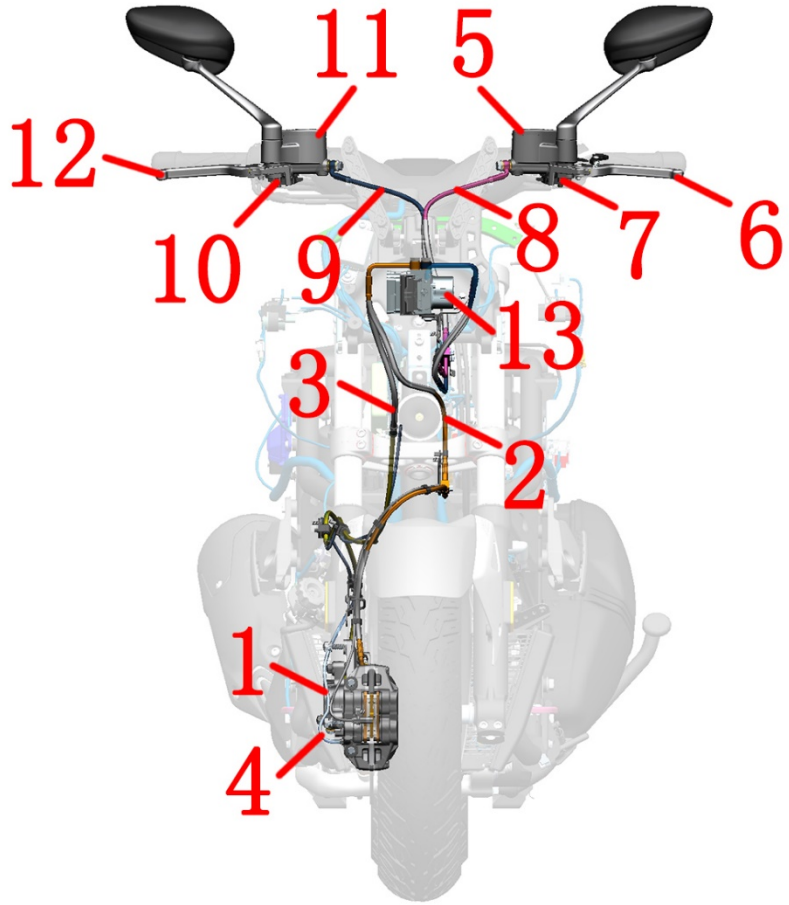

1-wheel speed sensor (front wheel) 2-FC-HU brake hose 3-RC-HU brake hose 4-wheel speed sensor (rear wheel) 5- rear disc brake main pump 6- rear brake lever 7- rear brake switch 8- RMC -HU brake hose 9-FMC-HU brake hose 10-front brake switch 11-front disc brake main pump 12-front brake handle 13-hydraulic control unit

5.2 D125

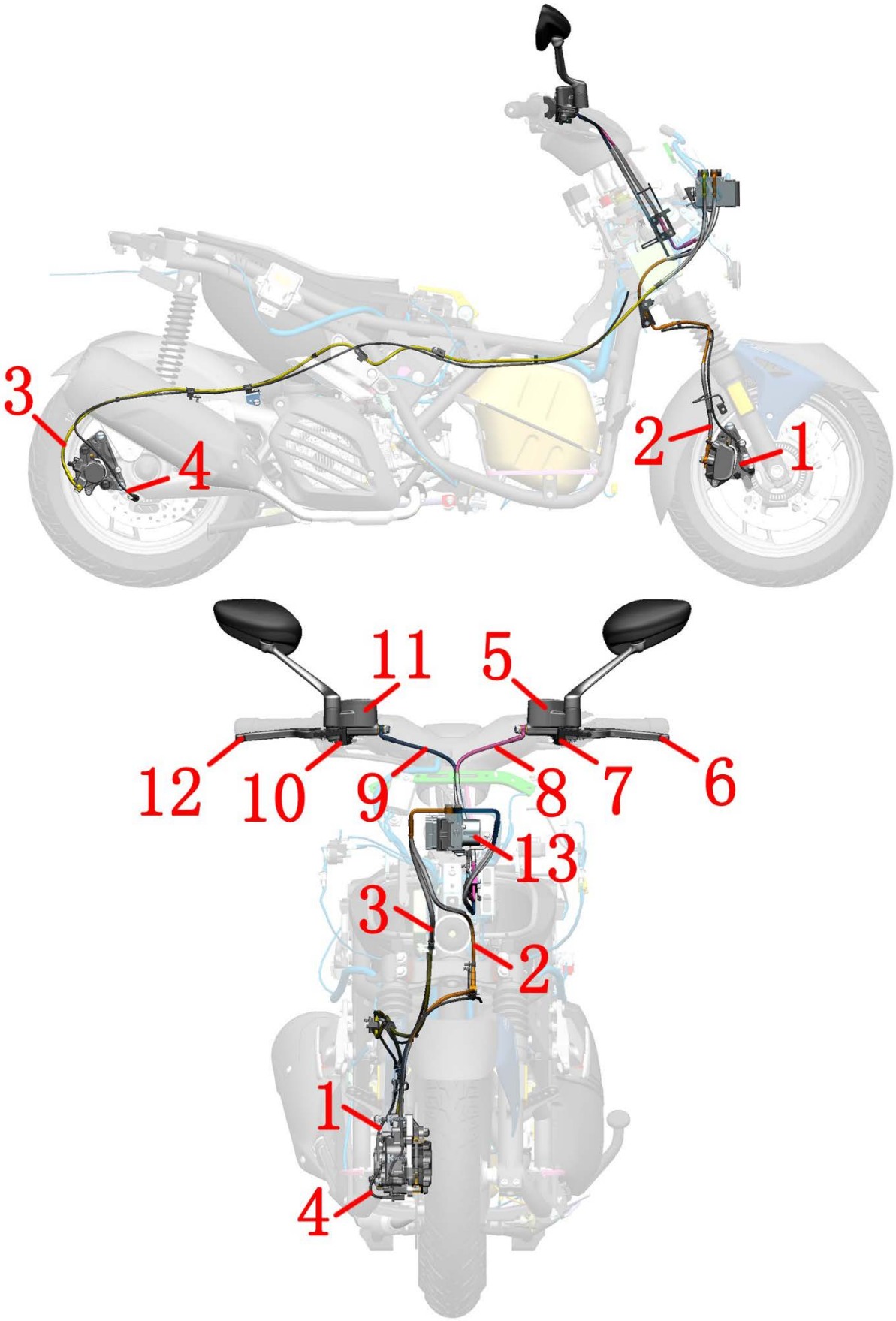

1-wheel speed sensor (front wheel) 2-FC-HU brake hose 3-RC-HU brake hose 4-wheel speed sensor (rear wheel) 5-rear brake lever 6-rear brake switch 7-RMC -HU brake hose 8-rear disc brake main pump 9-FMC-HU brake hose 10-front brake switch 11-front disc brake main pump 12-front brake handle 13-hydraulic control unit

5.2 D125(2024)/155

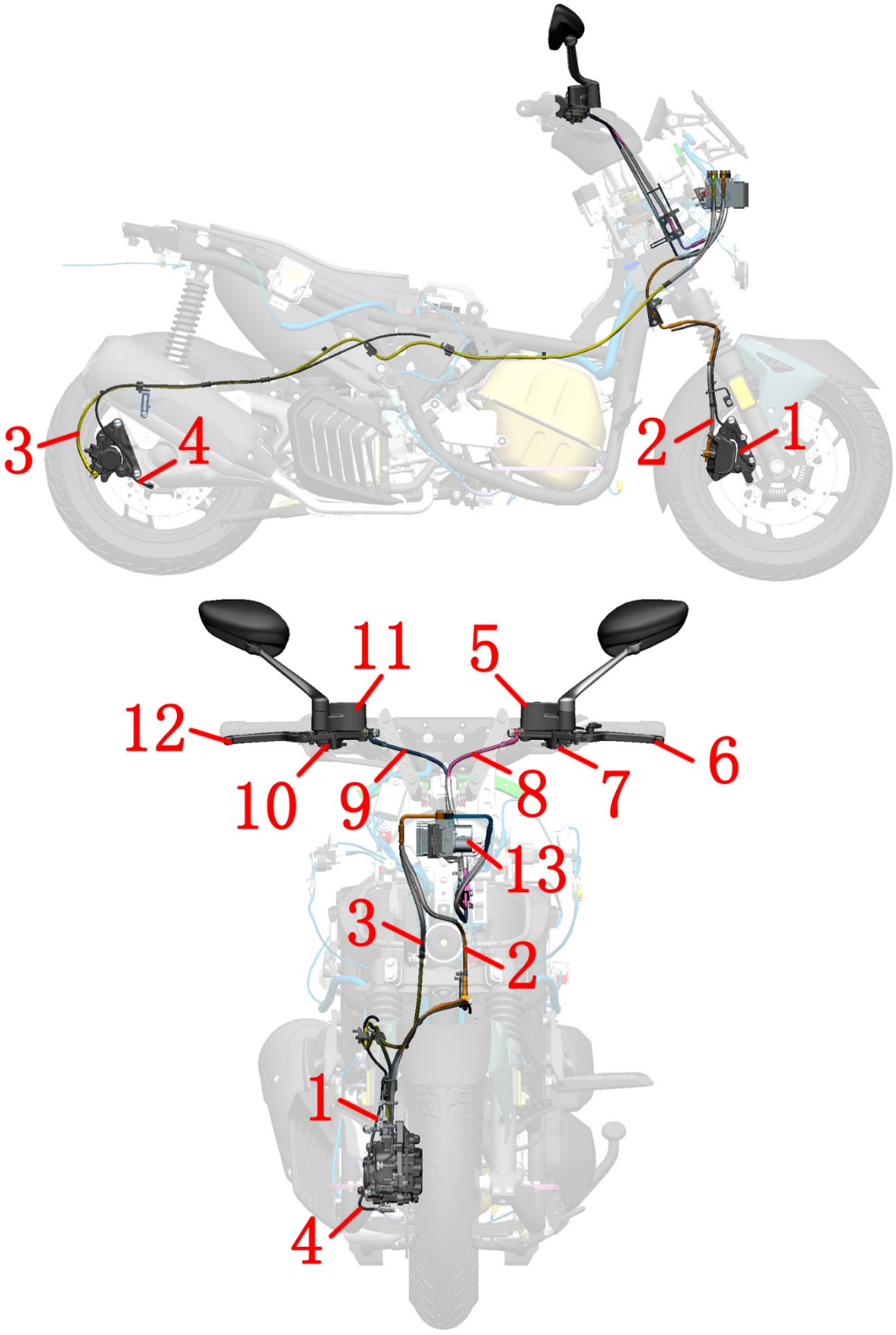

1-wheel speed sensor (front wheel) 2-FC-HU brake hose 3-RC-HU brake hose 4-wheel speed sensor (rear wheel) 5-rear brake lever 6-rear brake switch 7-RMC -HU brake hose 8-rear disc brake main pump 9-FMC-HU brake hose 10-front brake switch 11-front disc brake main pump 12-front brake handle 13-hydraulic control unit

6. Oil supply system

Check whether the hoses are bent, causing the airflow to be unsmooth.

6.1 D368 fuel evaporation

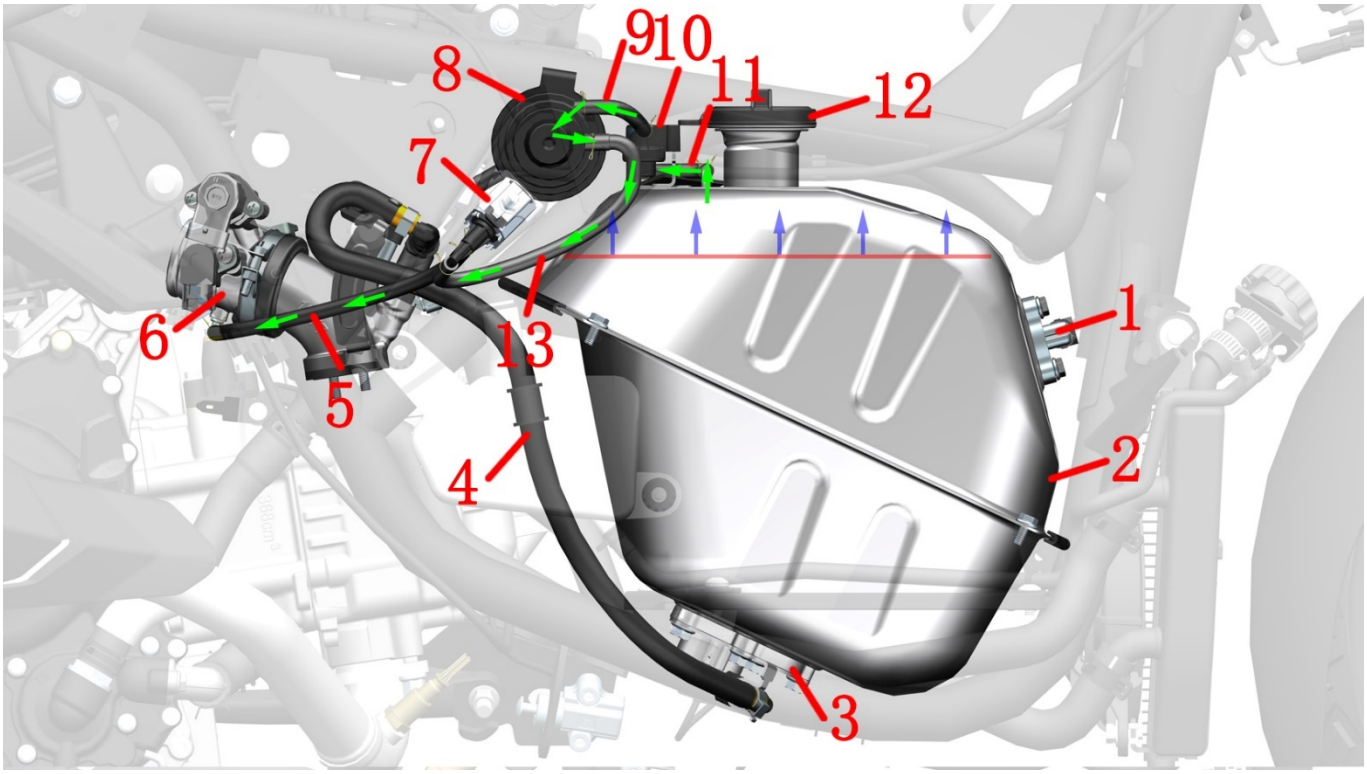

1- Fuel level sensor 2- Fuel tank 3- Fuel pump 4- High pressure fuel pipe 5- Solenoid valve outlet pipe 6-Throttle valve body assembly 7- Carbon tank solenoid valve 8-Carbon tank 9- Adsorption pipe 10- External oil and gas separator 11-Vent pipe 12- Fuel tank cap 13- Solenoid valve intake pipe

6.2 D350/D250 Fuel evaporation

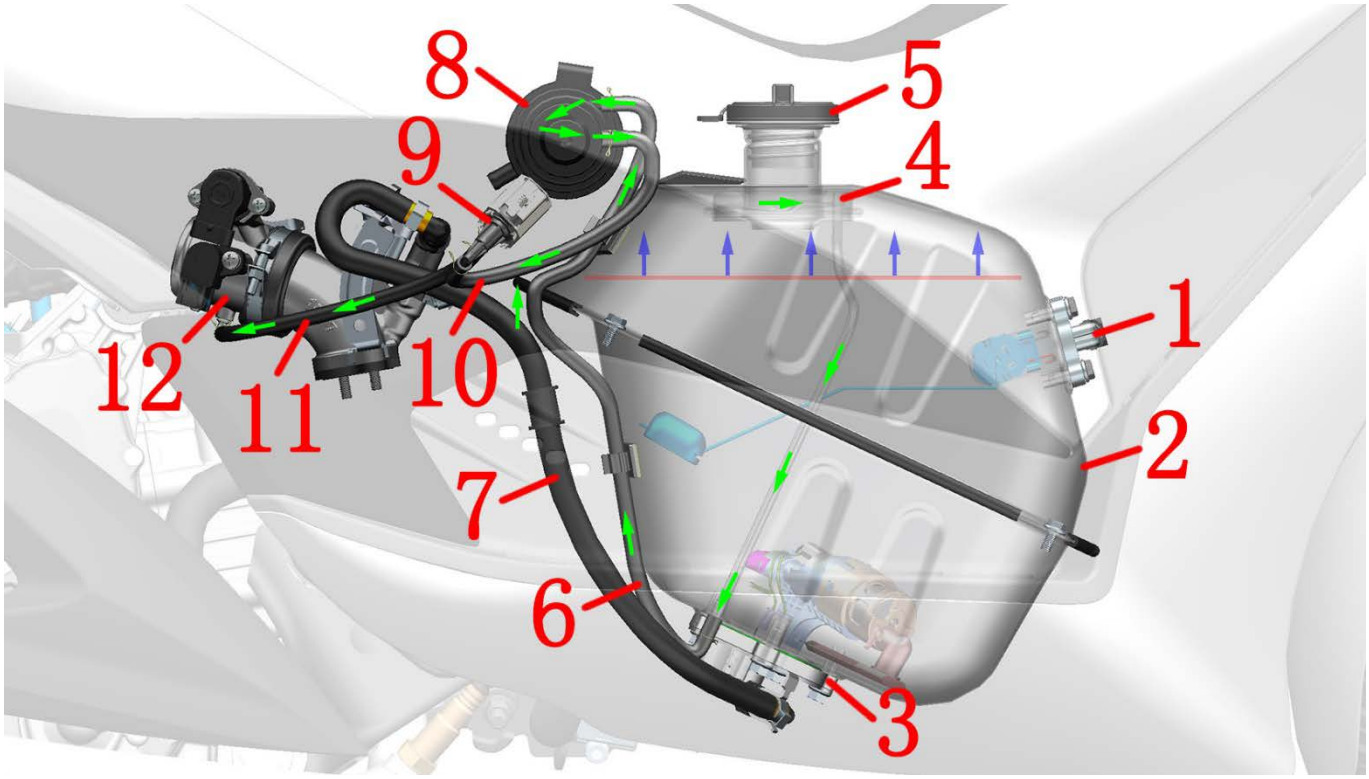

1- Fuel level sensor 2- Fuel tank 3- Fuel pump 4- Oil-air separator (welded inside the fuel tank) 5- Fuel tank cap 6- Adsorption/vent pipe 7-High pressure fuel pipe 8-Carbon tank 9-Carbon tank solenoid valve 10- Solenoid valve intake pipe 11-solenoid valve outlet pipe 12-throttle valve body assembly

Fuel evaporation:

Oil and gas → oil and gas separator (inside the oil tank) → adsorption/vent pipe → solenoid valve intake pipe → solenoid valve outlet pipe → throttle valve body assembly → intake manifold → cylinder

6.3 D125/125(2024)/155 Fuel evaporation

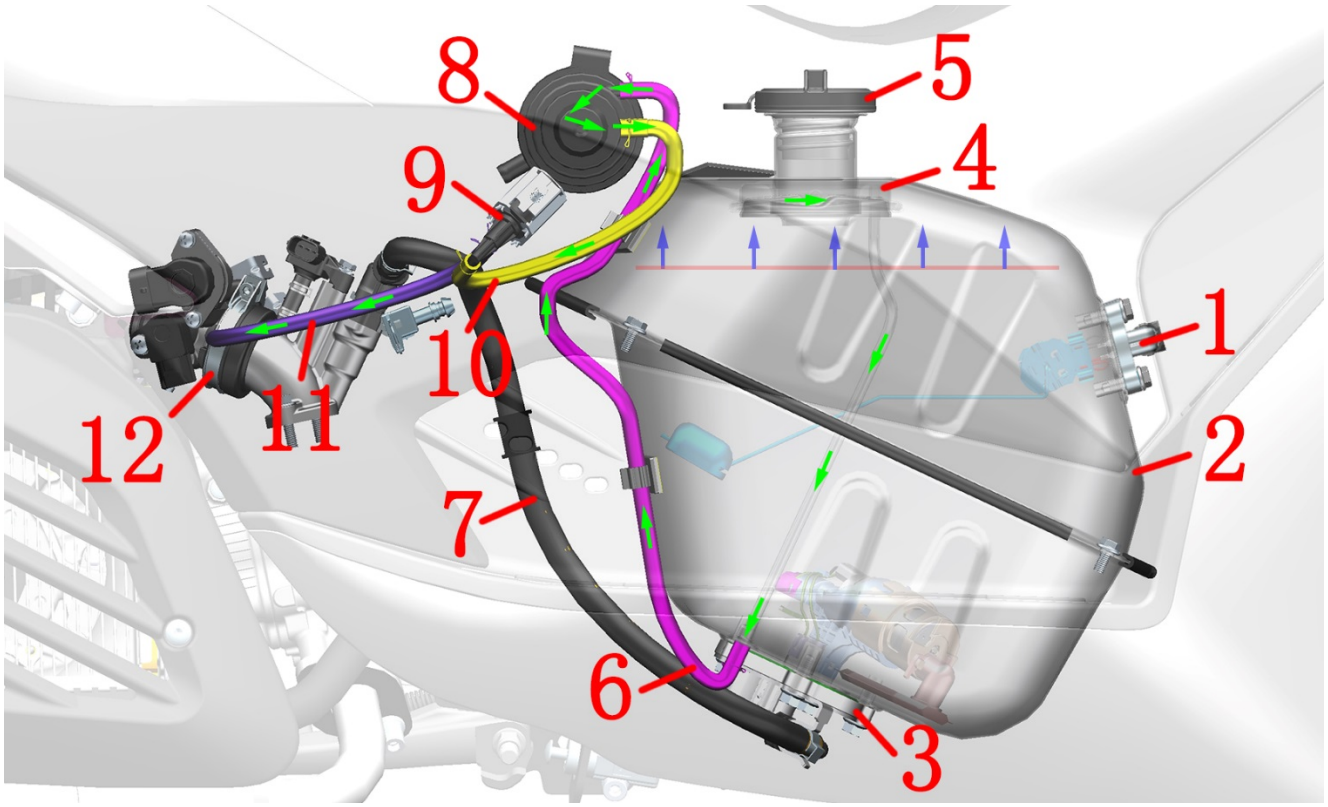

1- Fuel level sensor 2- Fuel tank 3- Fuel pump 4- Oil-air separator (welded inside the fuel tank) 5- Fuel tank cap 6- Adsorption/vent pipe 7-High pressure fuel pipe 8-Carbon tank 9-Carbon tank solenoid valve 10- Solenoid valve intake pipe 11- solenoid valve outlet pipe 12-throttle valve body assembly

Fuel evaporation:

Oil and gas → oil and gas separator (inside the oil tank) → adsorption/vent pipe → solenoid valve intake pipe → solenoid valve outlet pipe → throttle valve body assembly → intake manifold → cylinder

6.4 D350/D250 Fuel supply

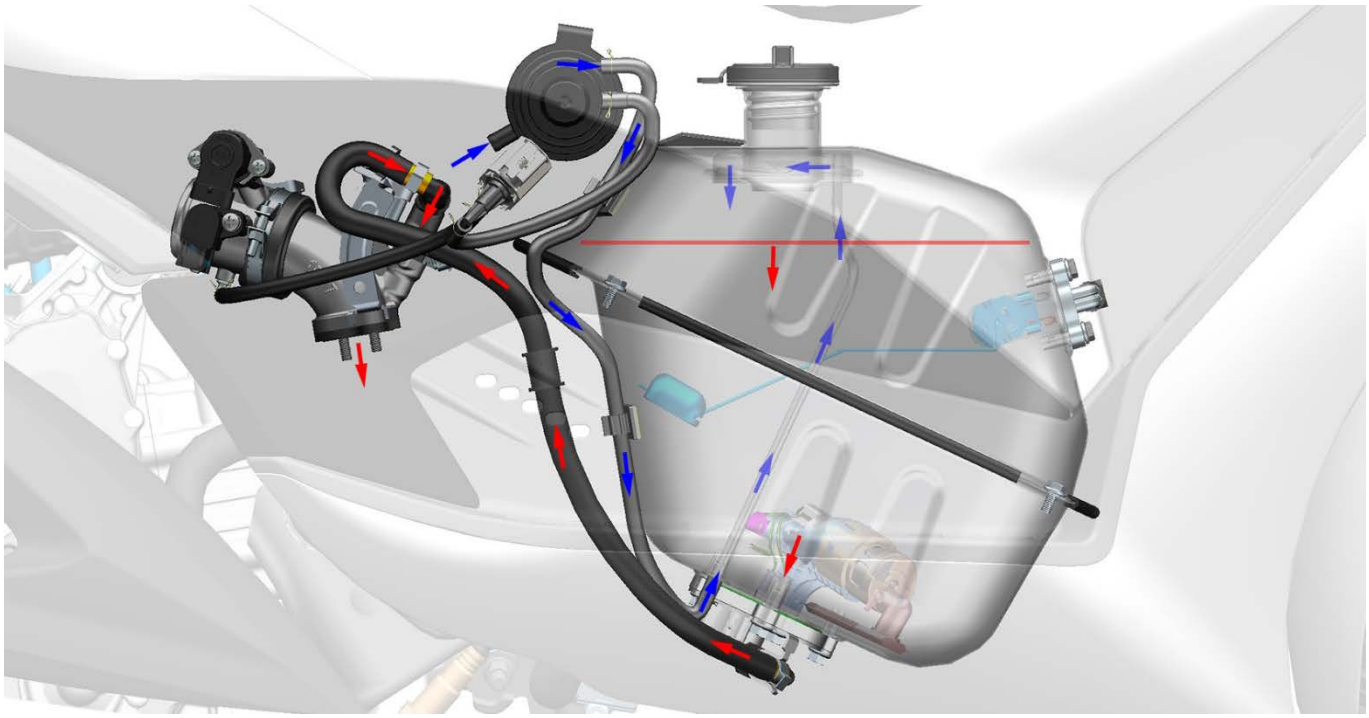

Fuel supply system:

Air→Carbon canister→Adsorption/vent pipe→Oil separator (inside the oil tank)

Fuel → Fuel pump filter screen → Fuel pump → High pressure fuel pipe → Fuel injector → Cylinder

6.5 D125/125(2024)/155 Fuel supply

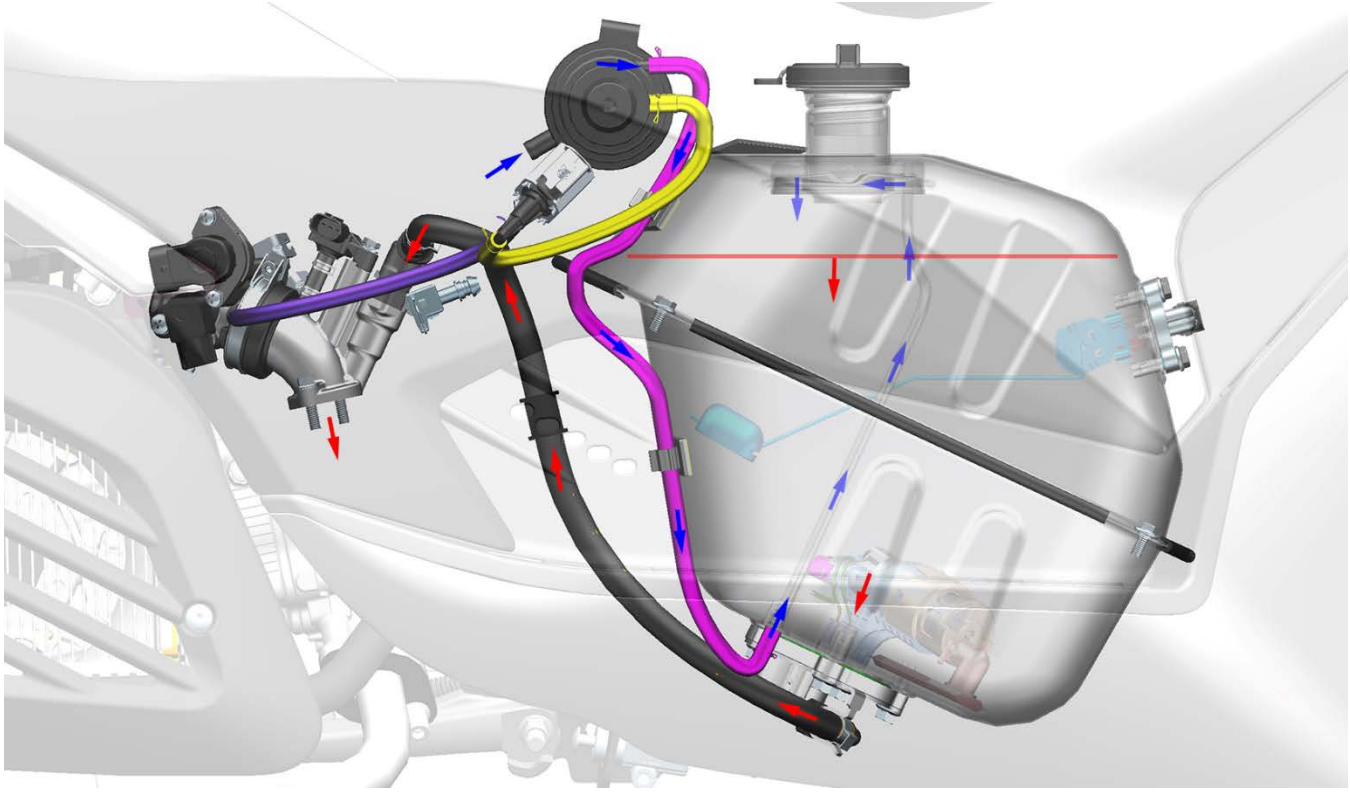

Fuel supply system:

Air→Carbon canister→Adsorption/vent pipe→Oil separator (inside the oil tank)

Fuel → Fuel pump filter screen → Fuel pump → High pressure fuel pipe → Fuel injector → Cylinder

6.6 D368 Fuel supply

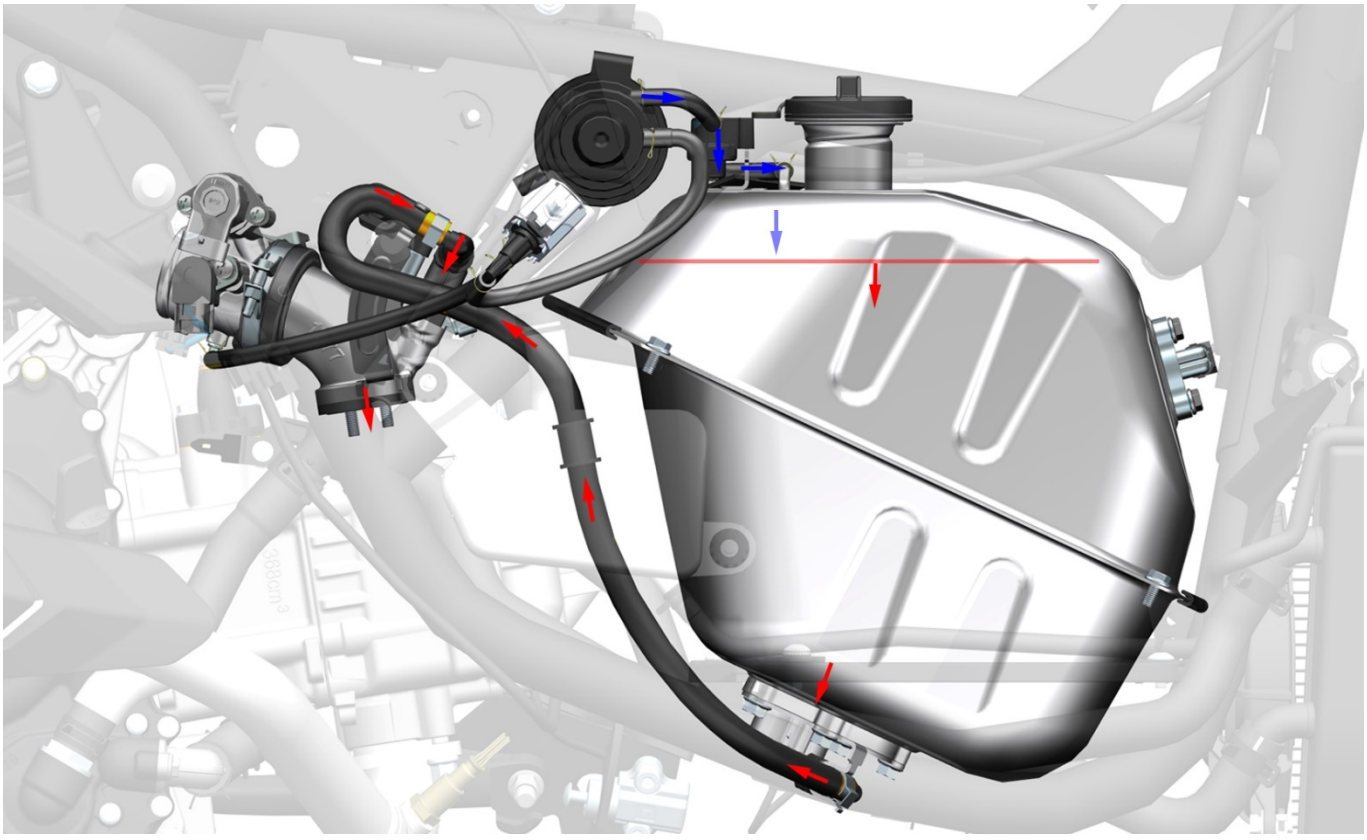

Fuel supply system:

Air→Carbon canister→Adsorption pipe→External oil gas separator→Fuel tank snorkel

Fuel → Fuel pump filter screen → Fuel pump → High pressure fuel pipe → Fuel injector → Cylinder

7. Distribution map of cooling system accessories

7.1 D350/D250/D368

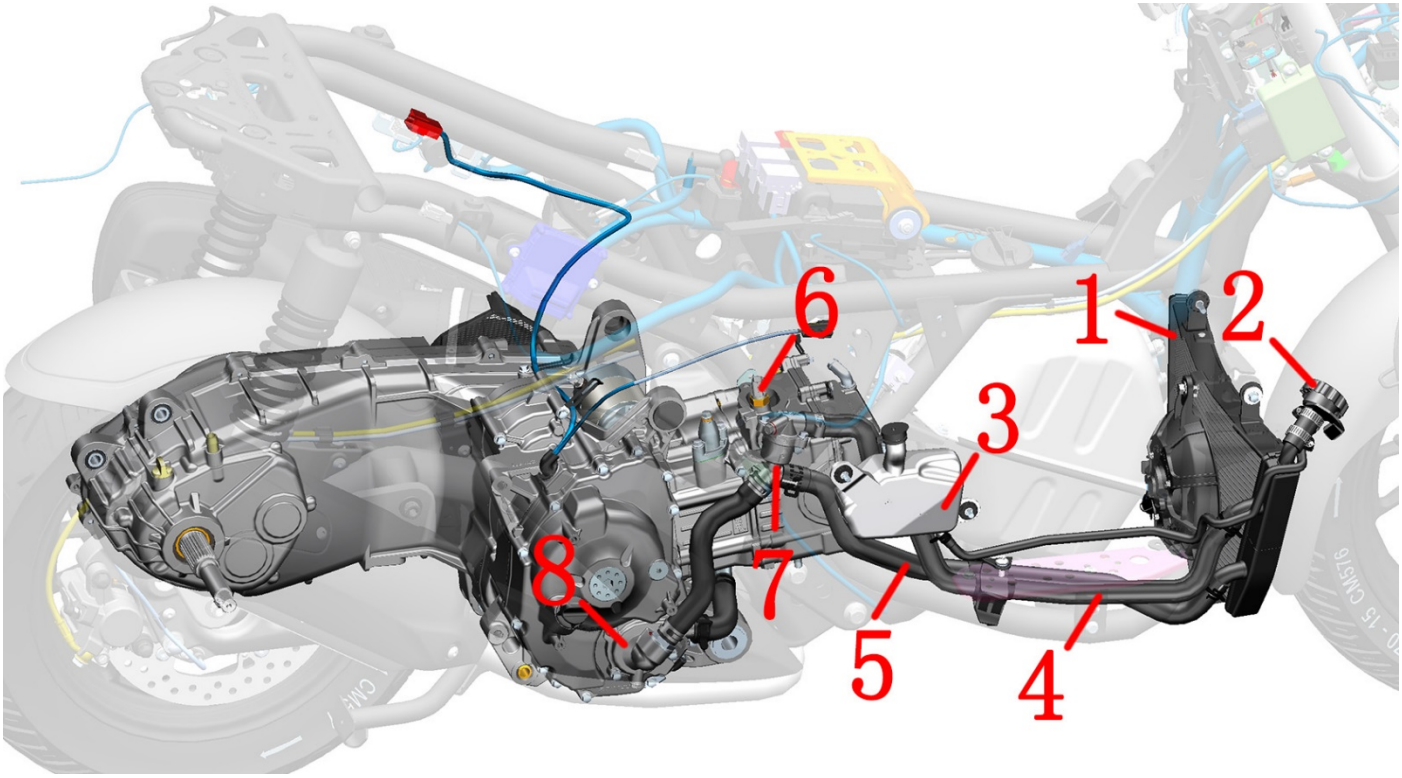

1-Main water tank 2- Water tank filling port 3- Secondary water tank 4- Main water tank water inlet pipe 5- Main water tank water outlet pipe 6- Water and oil shared sensor 7- Thermostat 8- Water pump cover assembly

7.2 D125/125(2024)/155

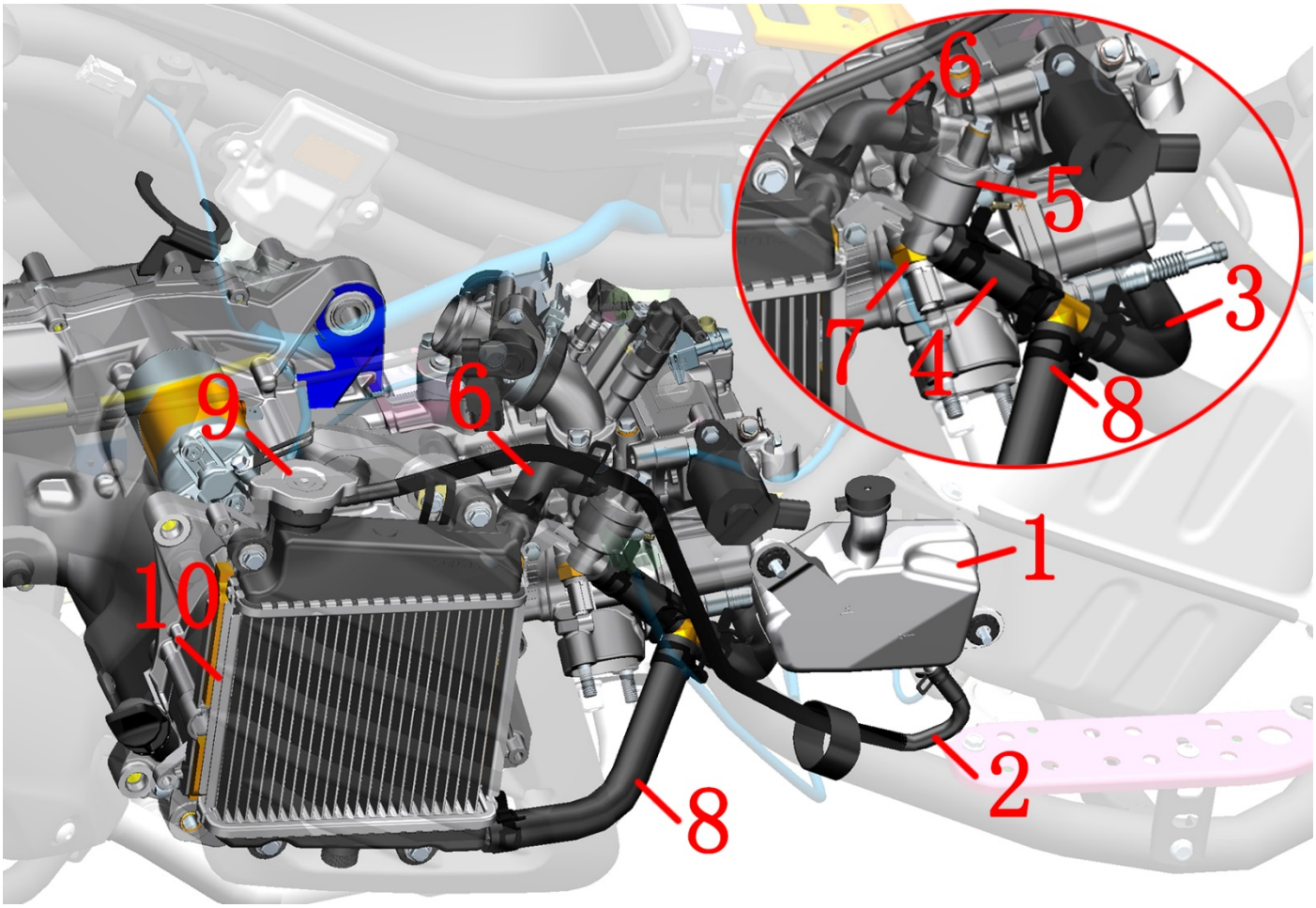

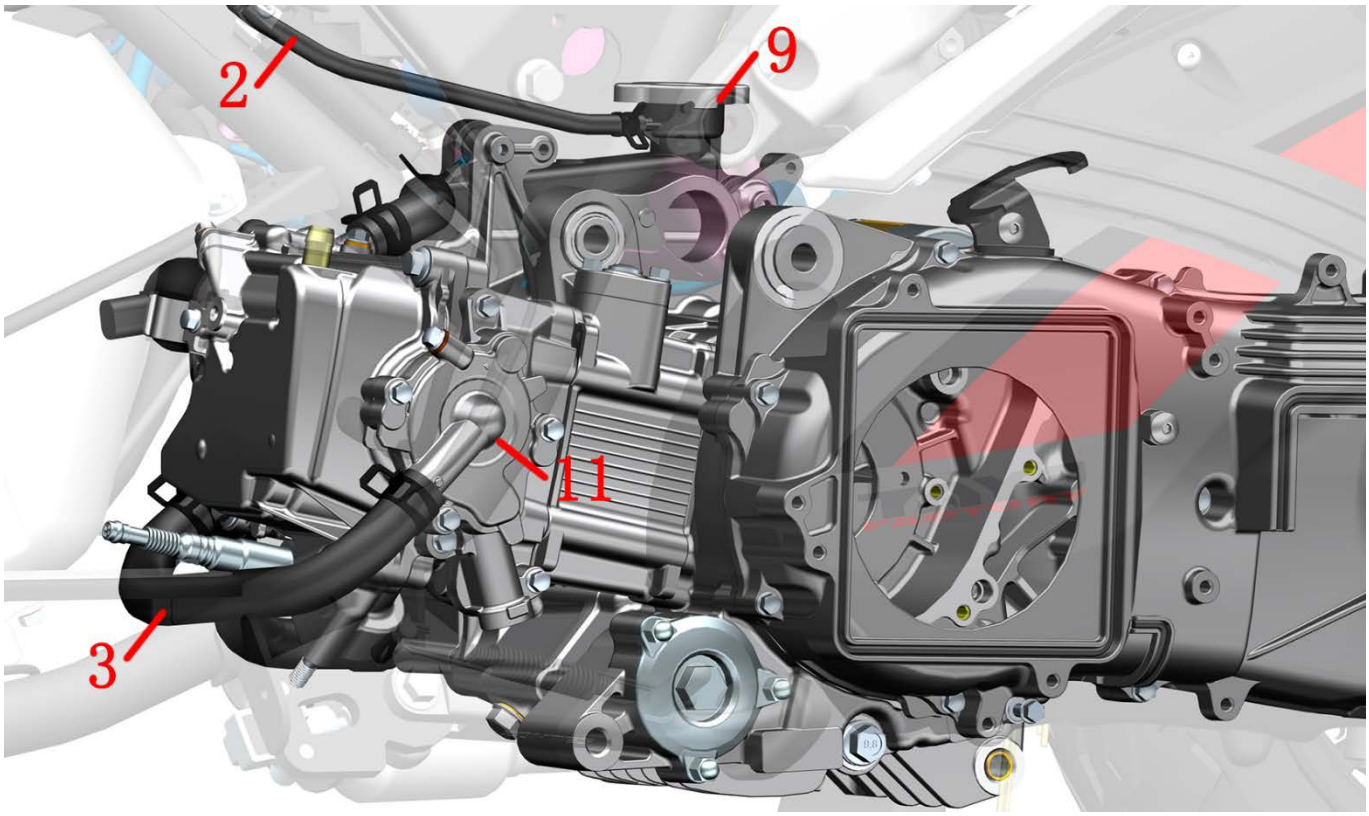

1- Secondary water tank 2-Secondary water tank link pipe 3-Engine inlet pipe 4- Thermostat outlet pipe 5- Thermostat 6- Water tank inlet pipe 7- Water and oil shared sensor 8- Water tank outlet pipe 9- Water tank cover 10- Radiator assembly 11- Water pump cover assembly

8. Electrical device layout

8.1 D350/D250/D368

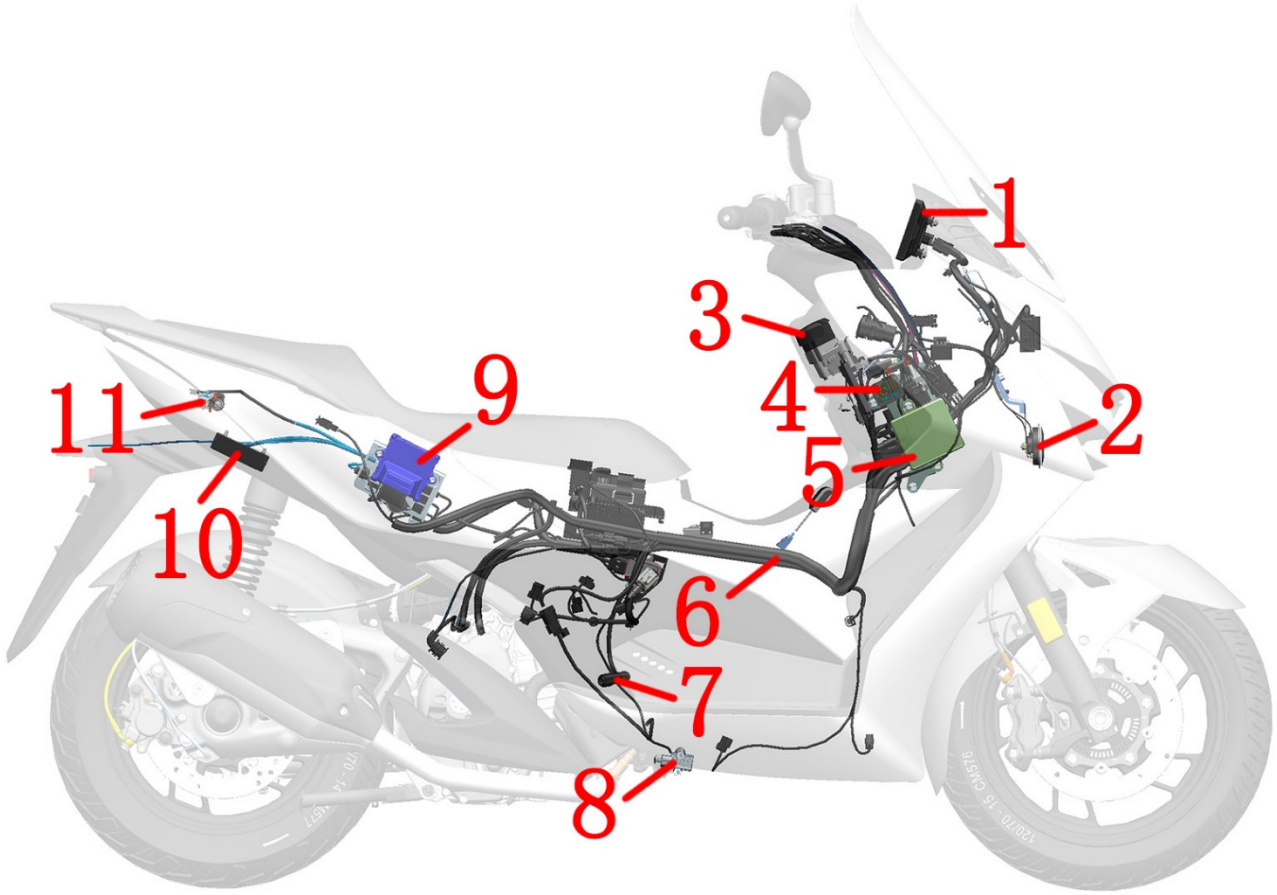

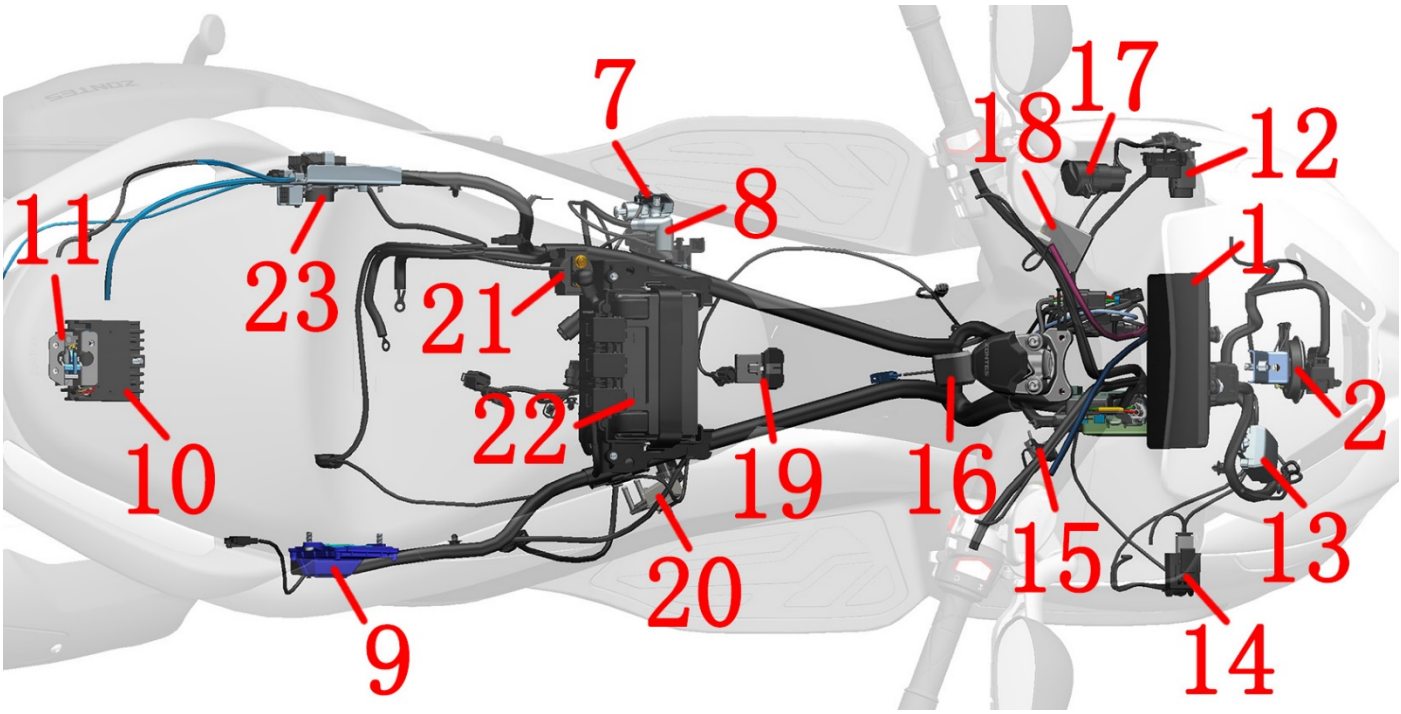

1-TFT meter 2-Speaker 3-Faucet lock 4-Charging port holder 5-PKE 6-Main cable 7-EFI high-voltage cable 8-Side bracket flameout switch 9-Engine Controller (ECU) 10-Rectifier 11-seat lock 12-Tipping switch 13-Windshield Motor Controller 14-Flash 15-Induction antenna 16- GPS antenna 17-USB charging cable 18-Front storage compartment lock 19- Electronic tank lock 20 - carbon can solenoid valve 21 - start relay 22 - battery 23 - PKE buzzer.

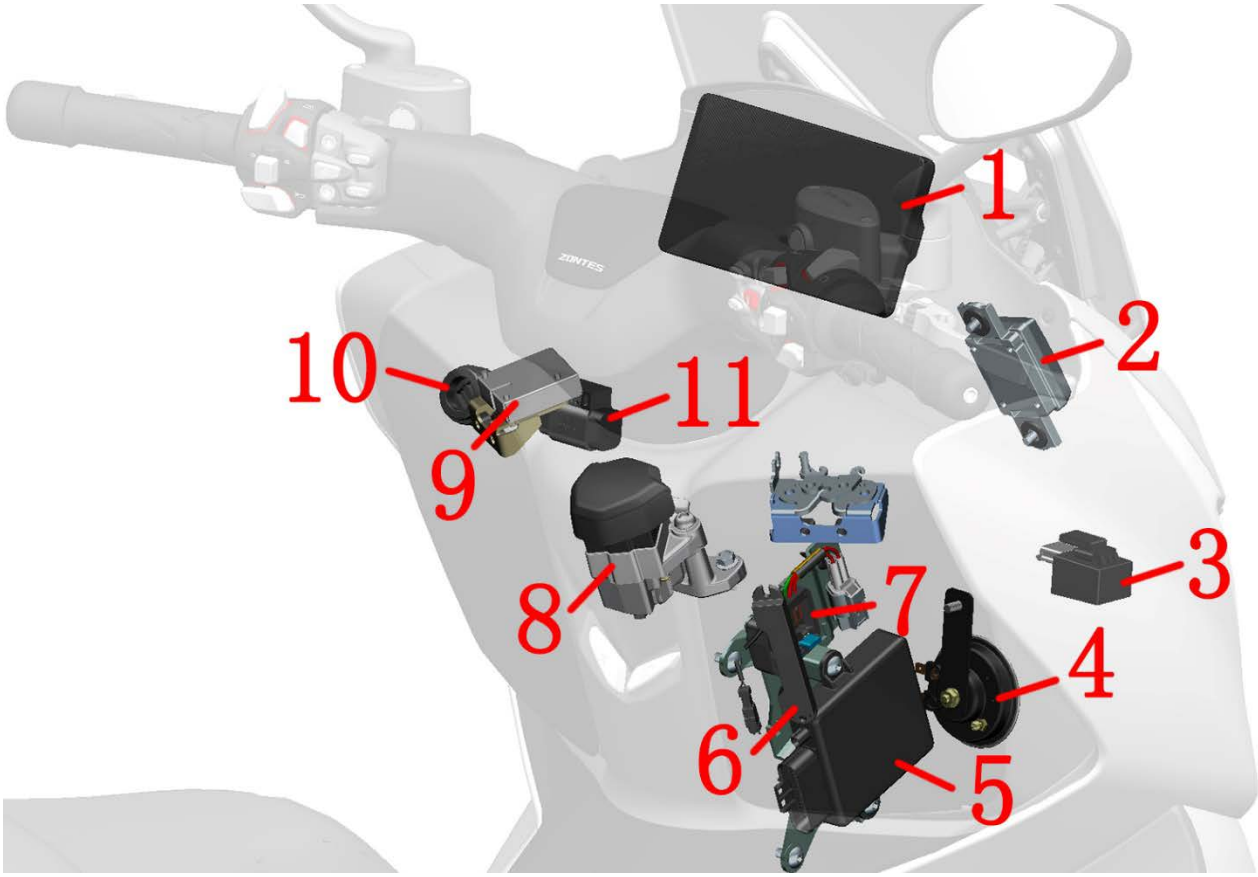

1-TFT meter 2-Windshield motor controller 3-Flash 4-Horn 5-PKE 6-Induction antenna 7-Charging port holder 8-Faucet lock 9-Front storage compartment lock 10-USB charging cable 11-Tipping switch

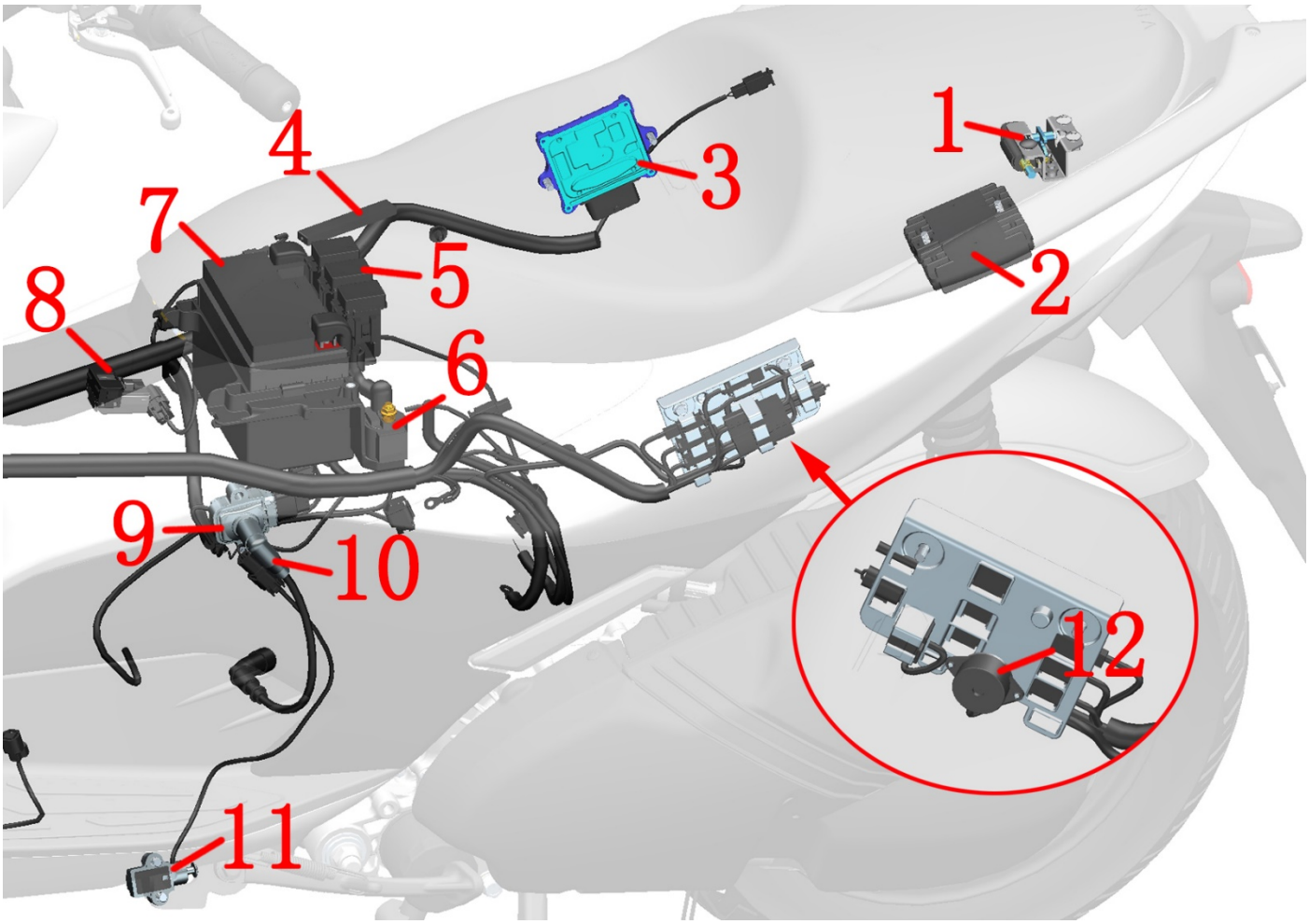

1-seat lock 2-Rectifier 3-Engine controller (ECU) 4-pke external antenna 5-Fuse box 6-Start relay 7-Battery 8-Electronic tank lock 9-Ignition coil body 10-EFI high-voltage line 11-Side bracket flameout switch 12-Buzzer.

8.2 D125/D125(2024)

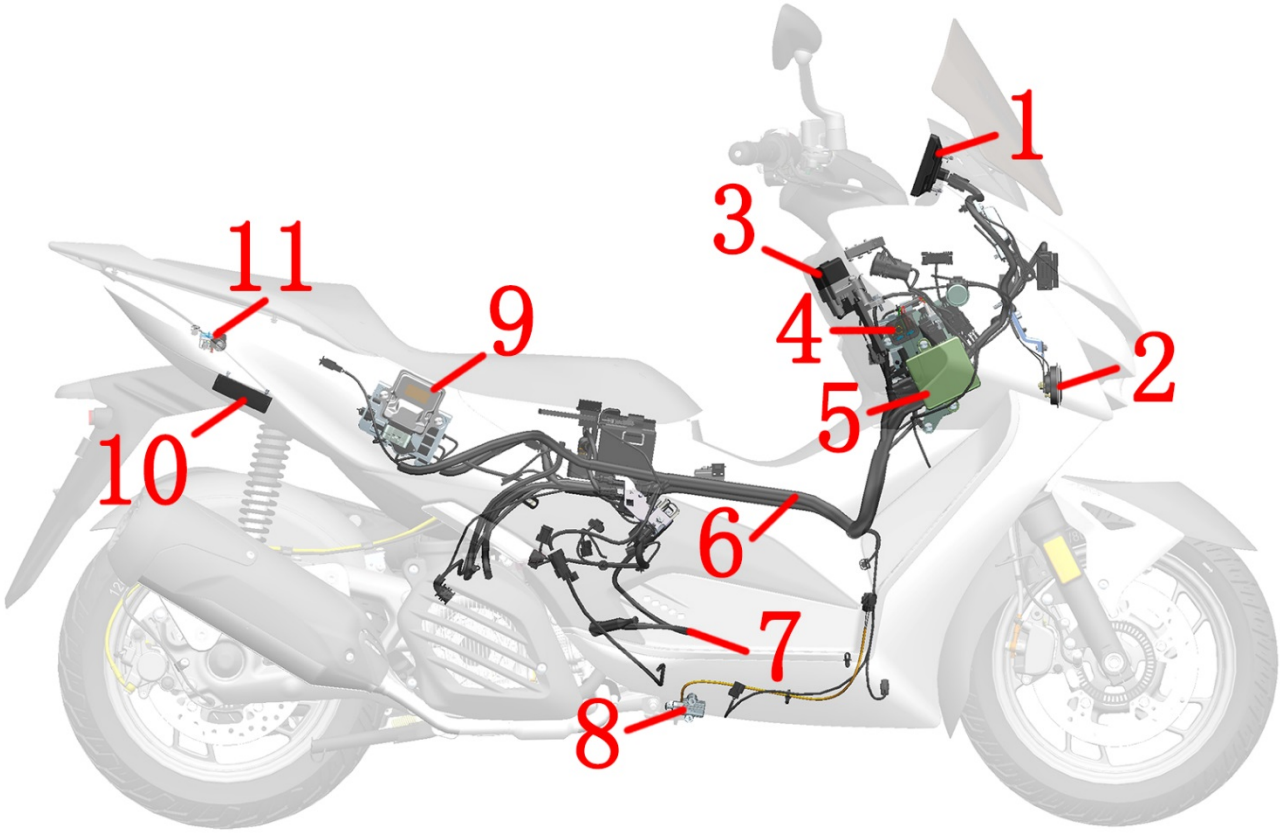

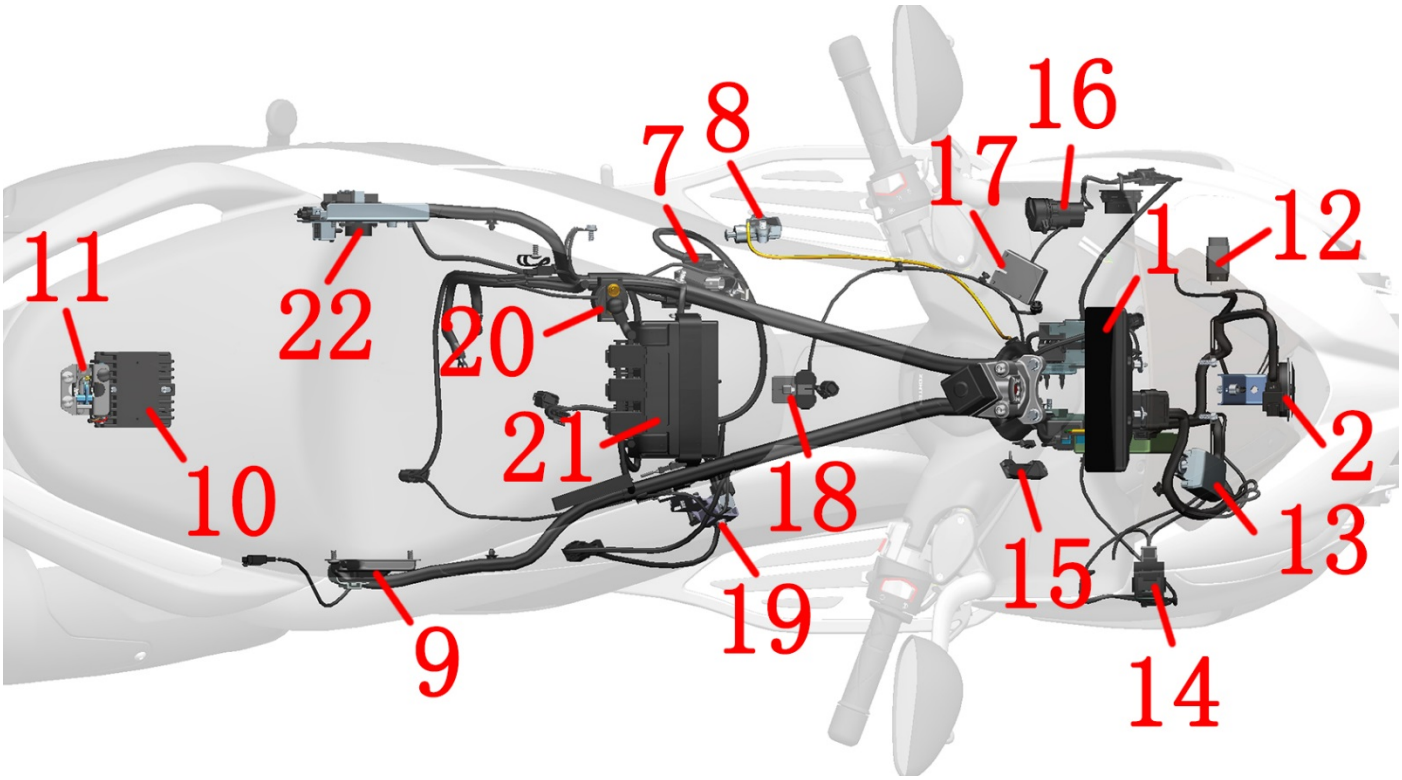

1-TFT meter 2-Speaker 3-Faucet lock 4-Charging port holder 5-PKE 6-Main cable 7- ignition coil 8-Side bracket flameout switch 9-Engine Controller (ECU) 10-Rectifier 11-seat lock 12-Tipping switch 13-Windshield Motor Controller 14-Flash 15-Induction antenna 16 -USB charging cable 17-Front storage compartment lock 18- Electronic tank lock 19 - carbon can solenoid valve 20 - start relay 21 - battery 22 - PKE buzzer.

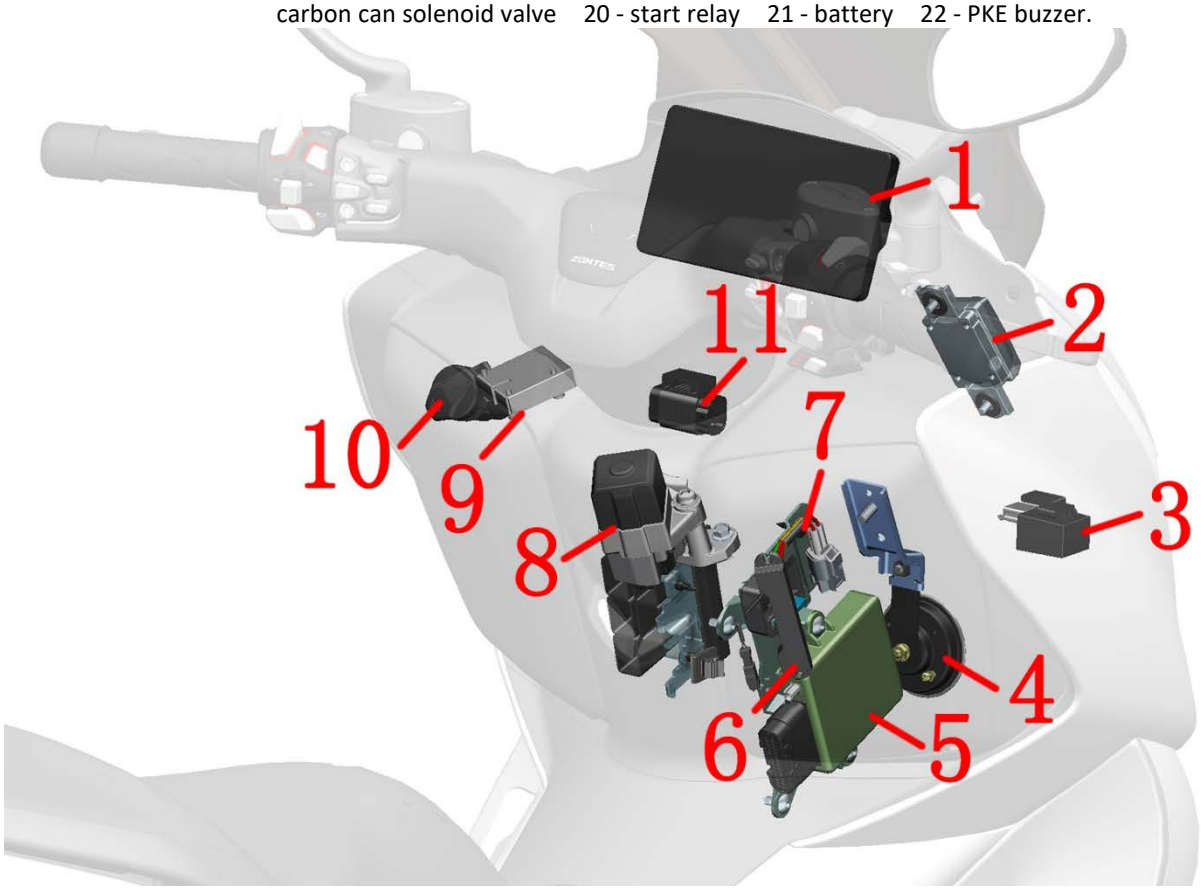

1-TFT meter 2-Windshield motor controller 3-Flash 4-Horn 5-PKE 6-Induction antenna 7-Charging port holder 8-Faucet lock 9-Front storage compartment lock 10-USB charging cable 11-Tipping switch

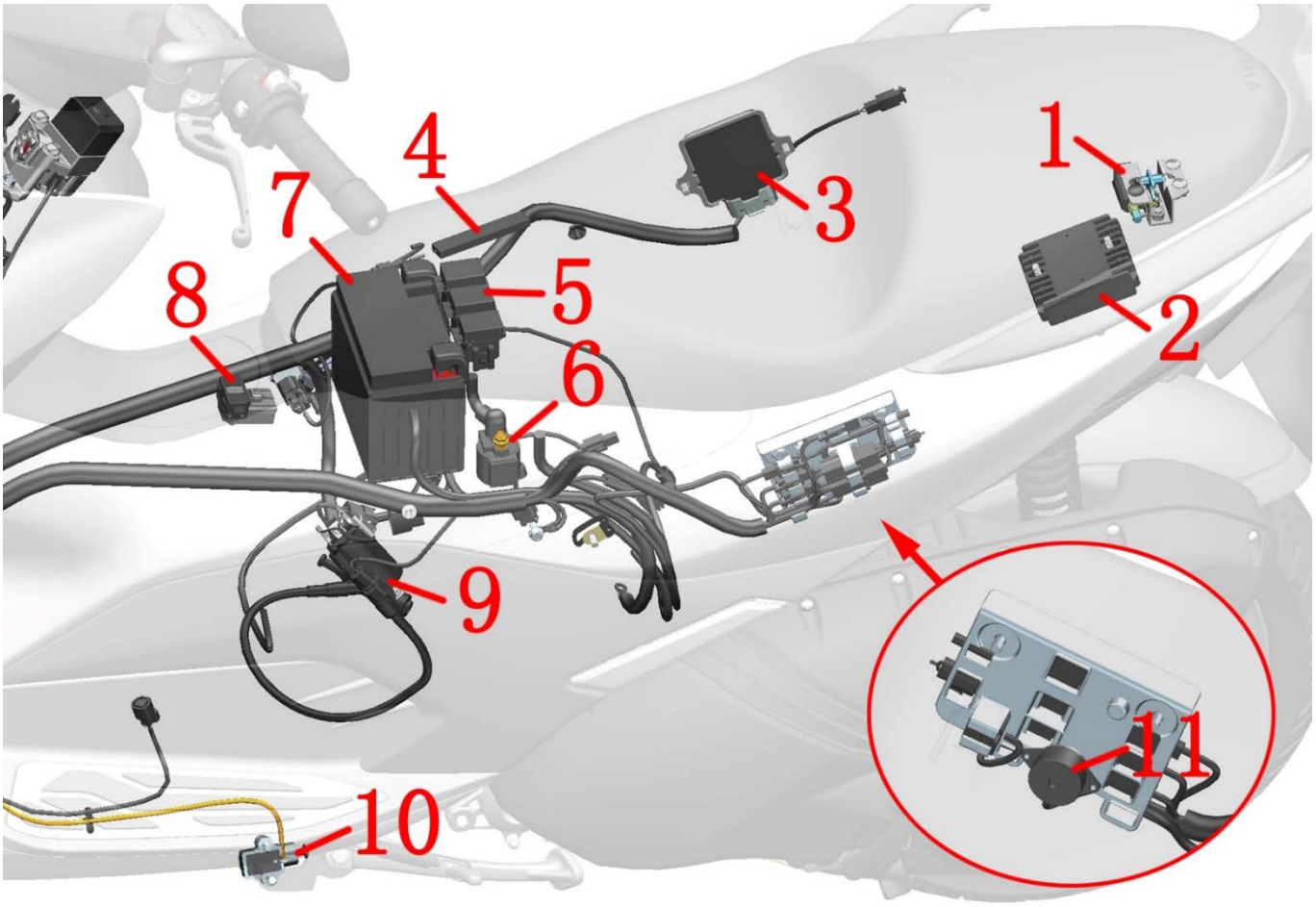

1-seat lock 2-Rectifier 3-Engine controller (ECU) 4-pke external antenna 5-Fuse box 6-Start relay 7-Battery 8-Electronic tank lock 9- ignition coil 10-Side bracket flameout switch 11-Buzzer.

8.3 D155

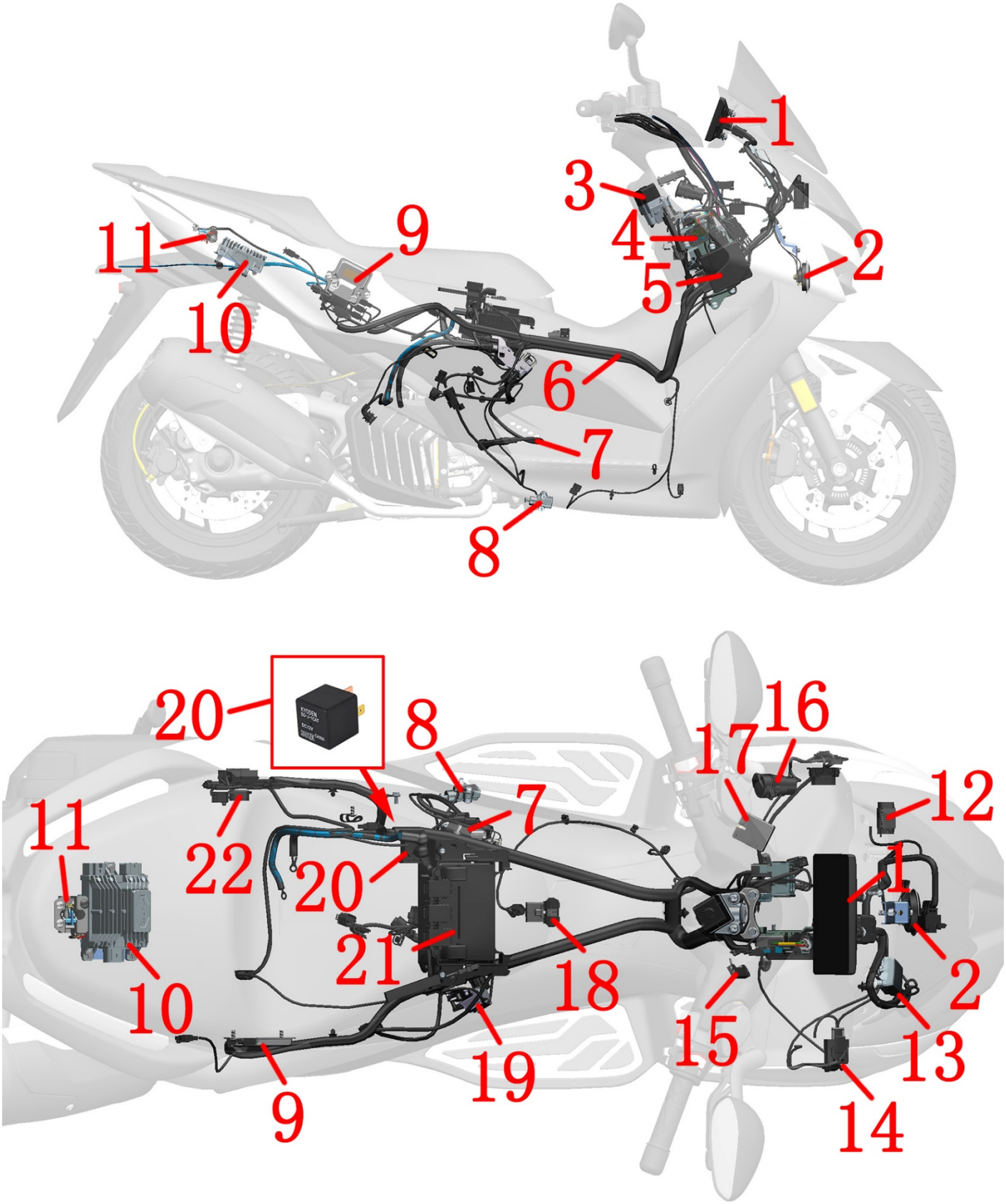

1-TFT meter 2-Speaker 3-Faucet lock 4-Charging port holder 5-PKE 6-Main cable 7- ignition coil 8-Side bracket flameout switch 9-Engine Controller (ECU) 10- start-stop controller 11-seat lock 12-Tipping switch 13-Windshield Motor Controller 14-Flash 15-Induction antenna 16 -USB charging cable 17-Front storage compartment lock 18-Electronic tank lock 19 - carbon can solenoid valve 20 - starter relay (auto start-stop exclusive) 21 - battery 22 - PKE buzzer.

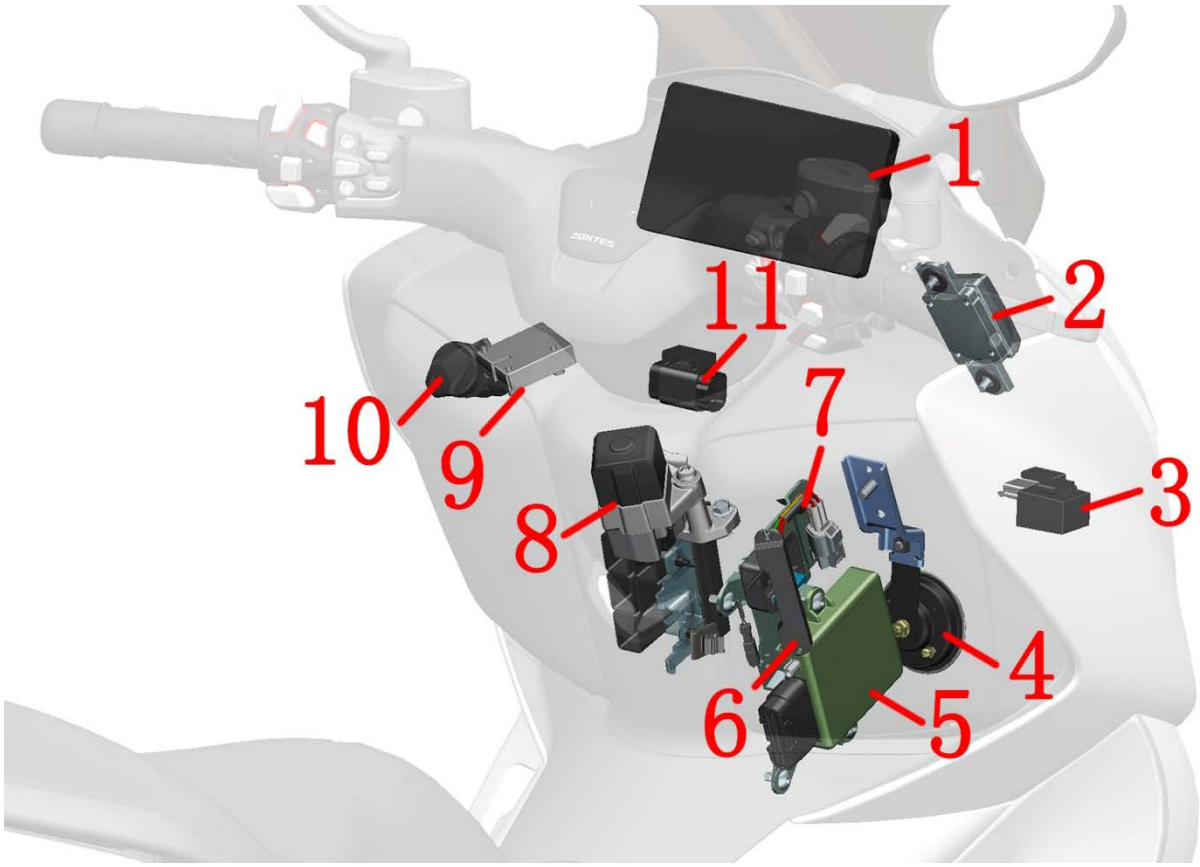

1-TFT meter 2-Windshield motor controller 3-Flash 4-Horn 5-PKE 6-Induction antenna 7-Charging port holder 8-Faucet lock 9-Front storage compartment lock 10-USB charging cable 11-Tipping switch

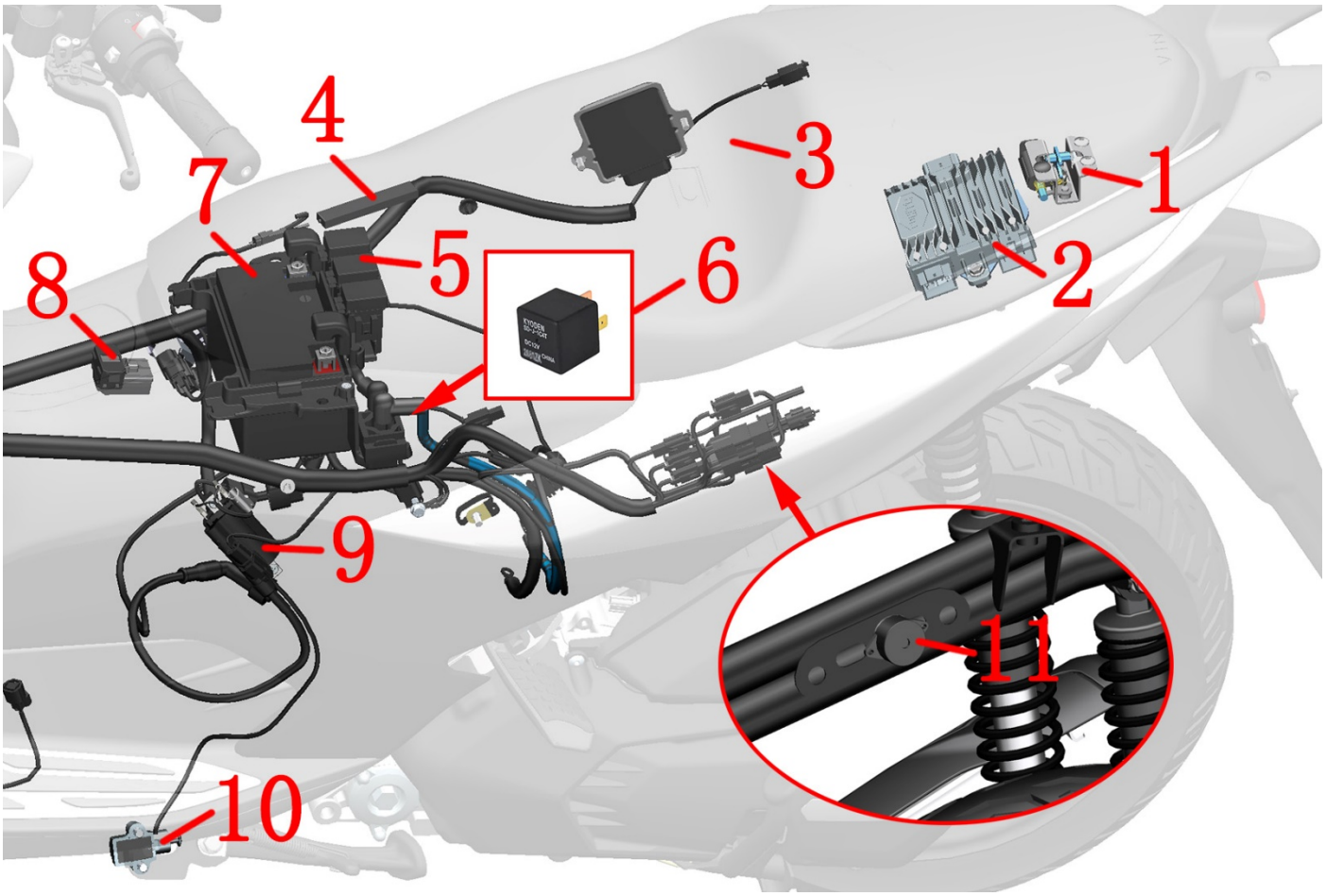

1-seat lock 2- start-stop controller 3-Engine controller (ECU) 4-pke external antenna 5-Fuse box 6- starter relay (auto start-stop exclusive) 7-Battery 8-Electronic tank lock 9- ignition coil 10-Side bracket flameout switch 11-Buzzer.

9. Intake and exhaust system
9.1 D350/D250/D368

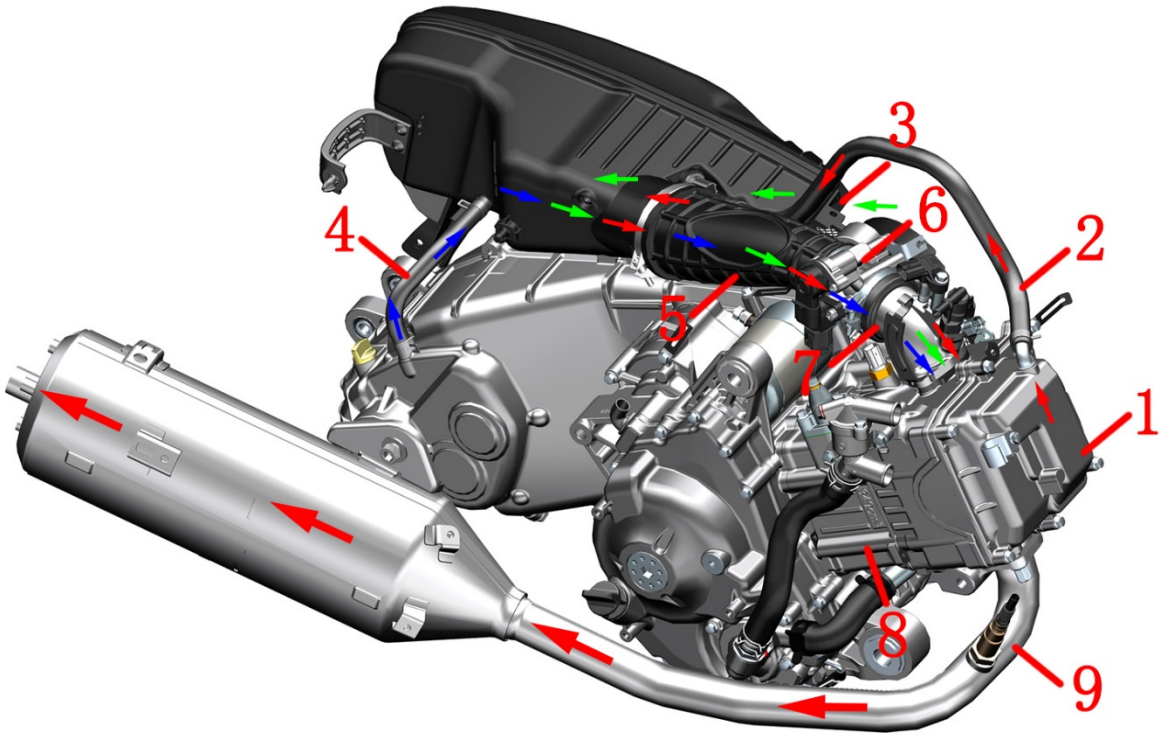

1- Cylinder head 2- Cylinder head exhaust pipe 3- Air filter intake inlet 4- Crankshaft Box exhaust pipe 5- Air filter outlet pipe 6- Throttle valve body assembly 7- Intake manifold 8- Cylinder 9- Muffler

Intake system (indicated by the green arrow):
Air → Air filter intake pipe → Air filter element → Air filter outlet pipe → Throttle valve assembly body → Intake manifold → Cylinder → Muffler

Cylinder head exhaust gas control system (red arrow indicates):
Exhaust gas → cylinder head cover → cylinder head exhaust pipe → air filter → air filter outlet pipe → throttle valve body → intake manifold → cylinder → muffler

Gearbox exhaust gas control system (indicated by the blue arrow):
Exhaust gas → gearbox exhaust pipe → air filter outlet pipe → throttle valve body → intake manifold → cylinder → muffle

9.2 D125/125(2024)/155

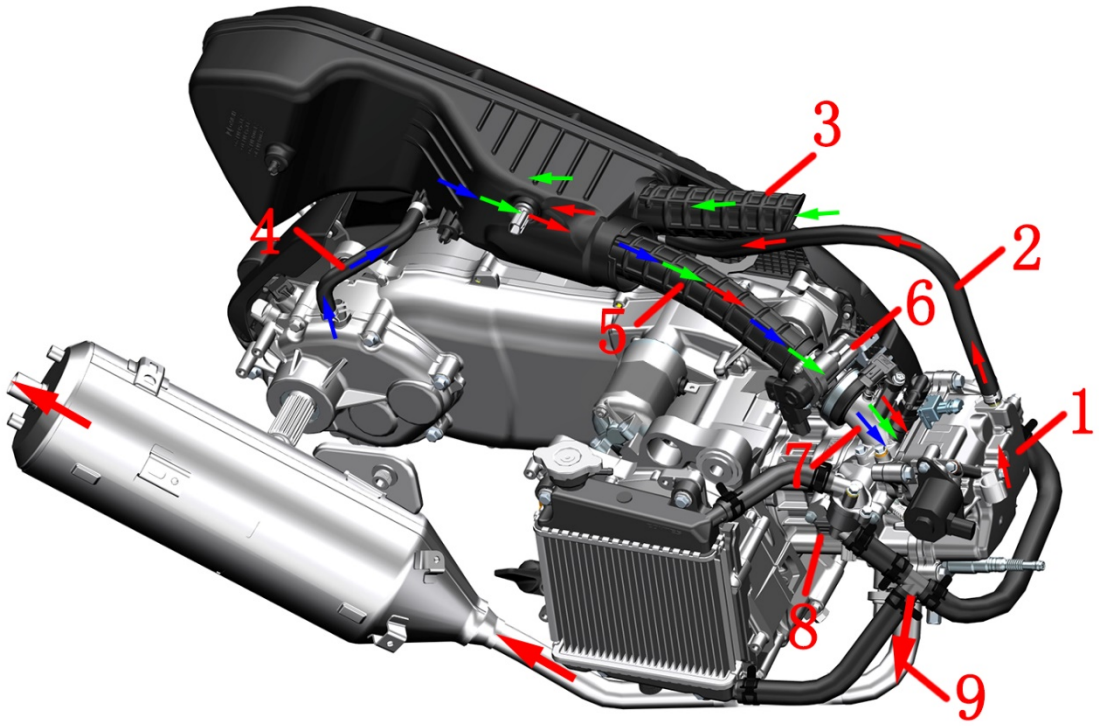

1- Cylinder head 2-Cylinder head exhaust pipe 3- Air filter intake pipe 4- Crankshaft Box exhaust pipe 5-Air filter outlet pipe 6-Throttle valve body assembly 7- Intake manifold 8-Cylinder 9- Muffler

Intake system (indicated by the green arrow):
Air → Air filter intake pipe → Air filter element → Air filter outlet pipe → Throttle valve assembly body → Intake manifold → Cylinder → Muffler

Cylinder head exhaust gas control system (red arrow indicates):
Exhaust gas → cylinder head cover →cylinder head exhaust pipe → air filter → air filter outlet pipe → throttle valve body → intake manifold → cylinder → muffler

Gearbox exhaust gas control system (indicated by the blue arrow):
Exhaust gas → gearbox exhaust pipe → air filter outlet pipe → throttle valve body → intake manifold → cylinder → muffle

Tool

			
125-piece tool set	Torque wrench	On-board tools	Claw hammer
			
Pull code	Rubber hammer	Dynamic Balancing Machine	Tire raking machine
			
Oil pan	Measuring cup	Funnel	Taps, dies
			
Micrometer	Depth gauge	Vernier caliper	Feeler gauge
			
Tire pressure gauge	Magnetic base + dial indicator	PT300 electronic spraying and writing diagnostic Speedometer （16PIN）	17#Inner hexagon

			
Hoop clamp	Internal Circlip Pliers	External circlip pliers	Clamp multimeter
			
Multimeter	Dust blow gun	M350 replace the oil filter	
Some of the above pictures are from the Internet, and the copyright belongs to the author of the original picture. Do not use it for other purposes.			

Swell nail description

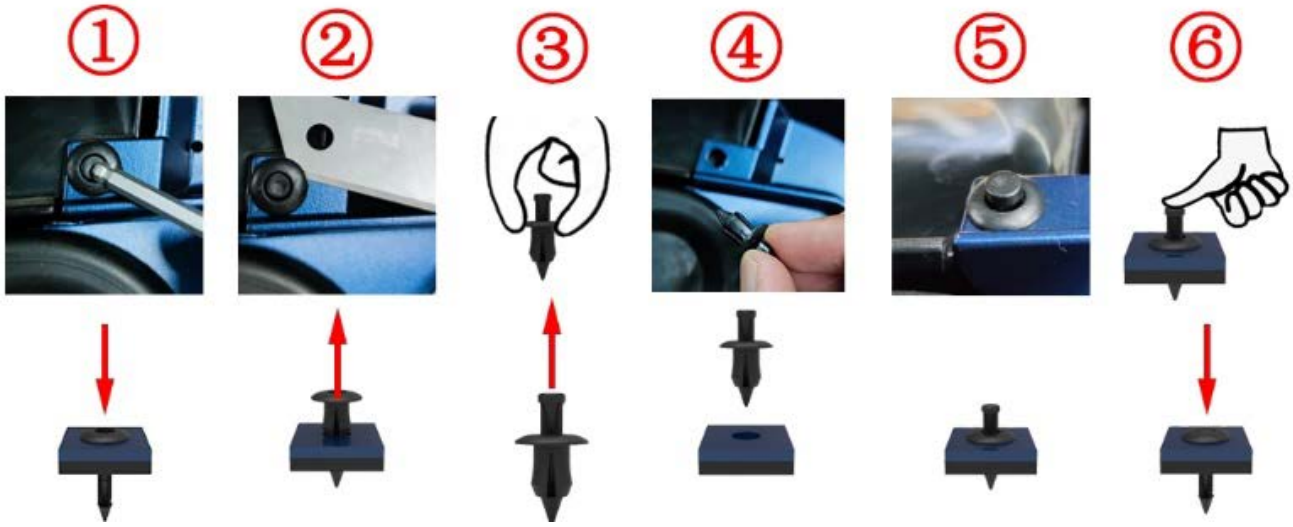

①Press down the center cylinder with 4# inner hexagon or other tools, you can hear a sound or the center cylinder moves axially by 2mm;
②Pry open the gap with a blade, nail or carving knife, etc. and remove it; if space permits, you can reach it Push out from the back;
③Pinch the outer ring with two fingers, and push the center cylinder up to the initial position;
④Pinch the center cylinder with two fingers to install the swell nails to the installation position;
⑤The outer ring is attached to the connected parts; if not attached Check whether it is misaligned;
⑥Press the center cylinder with your fingers or other tools, and you can hear a sound or the top of the center cylinder is almost flush with the top surface of the outer ring, indicating that the assembly is in place.

2. Maintenance

Know Before Service

1. Use good quality tools, or special tools and fixtures designed by our company. The use of inferior tools may cause damage to parts, peeling of plating, improper assembly, etc.
2. The O-rings, paper gaskets, copper gaskets, and component seals used for sealing must be replaced before assembly.
3. Fasteners with torque requirements need to use a torque wrench to check the torque; if the torque is not required, refer to the general torque value recommended by general fasteners.
4. Clean up before assembly; after assembly, check whether the assembly is correct and in place.
5. The vehicle should be parked balanced and pay attention to safety during disassembly and assembly. Including but not limited to the use of electric tools, hand tools, pneumatic tools, hydraulic tools, and handling. Prevent contact with skin, eyes, burns, electric shocks, etc.
6. The replaced oils, liquids, batteries, etc. must be recycled and handed over to a qualified organization for disposal; it is forbidden to dump them at will to pollute the environment or water sources.
7. Swallowing or inhaling coolant, brake fluid, etc. will cause certain harm to the human body. Any exposed skin such as hands and face should be cleaned thoroughly after each addition. If swallowed by mistake, immediately contact the poison control center or hospital; if inhaled, immediately go to a ventilated environment. If it accidentally splashes into the eyes, immediately rinse the eyes with a large amount of running water and seek medical advice or consultation in time. Keep away from children and pets.
8. If you need to clean or wash the body parts of the vehicle, you should use neutral car wash fluid or tap water, diesel, kerosene, etc. Acidic or alkaline car wash fluid will cause irreversible corrosion of the surface paint, electroplating surface, and anodized surface of the parts; gasoline will cause premature aging or hardening of sealants, gaskets, and rubber parts, reducing the service life. Non-woven fabrics should be used for wiping with no residue. Ordinary rags may leave cloth scraps or wool, etc., which may affect the assembly or cause other adverse effects.
9. The following is the instructions for disassembly and assembly of swell nails.

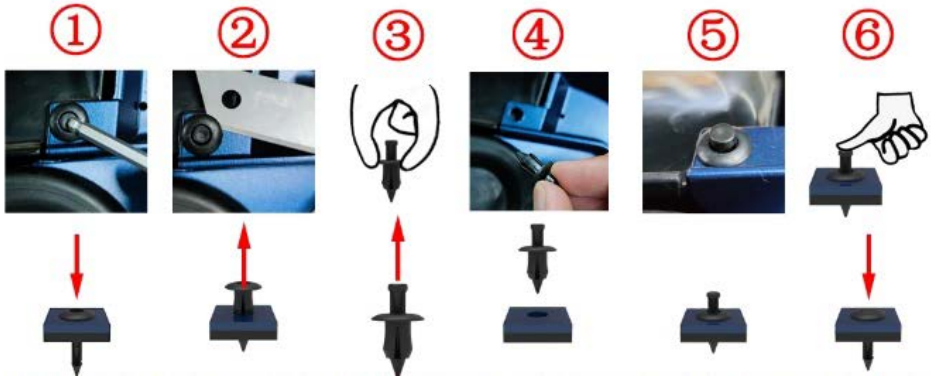

①Press the center cylinder with 4# inner hexagon or other tools, you can hear a sound or the center cylinder moves axially by 2mm (0.079 in);
②Pry open the gap with a blade, nail or carving knife, etc. and remove it; if there is space It is allowed to reach to the back to push out;
③Pinch the outer ring with two fingers and push the center cylinder up to the initial position;
④Pinch the center cylinder with two fingers to install the swell nails to the installation position;
⑤The outer ring fits the connected parts; if it does not fit, check for misalignment;
⑥ Press the center cylinder with your fingers or other tools, and you can hear a sound or the top of the center cylinder is almost flush with the top surface of the outer ring, indicating that the assembly is in place.

Only part of the basic requirements for matters needing attention, prevention of accidental injury, etc. can be listed; it is not possible to list all situations in detail. Be vigilant during disassembly and assembly to prevent accidents.

D125/150/155 Maintenance schedule

I: inspection（Inspect and clean,adjust,lubricate or replace if necessary） R:replace **T**： Tighten ★:Comment

Check item	Inspection before driving	km/ mile Months	Initial 1000/621 Initial 3	Every 4000/2485 Every 6	Every 8000/4970 Every 12	Replace regularly	Torque N.m/kgf.m
Cradle buffer glue			Inspection every year or 10,000 kilometers (6214 mile)				
Air filter (filter element)			check every 3000 kilometers (1863 mile) and replace every 6000 kilometers (3726 mile).				
Engine air inlet filter							
Bolts and nuts of muffler			T		T		M8：22±4/2.2±0.4 M10：45±5/4.6±0.5
** Spark plug					I		
Engine oil	I		★Replace when the maintenance reminder light is flashing				
Oil filter			R		R		
* Throttle body			I		I		
* Throttle cable clearance			I	I			
Idle speed			I	I			
* Fuel evaporative pollutant control system					I		
Radiator				I			
* Fuel pipe				I			
V belt			Clean and check every 8000 kilometers (4971 mile)			20,000 kilometers (12427 mile)	
** Braking System			I	I			
Brake hose				I		Check for leaks	
Brake fluid				I		Every 2 years	
** Tire/Wheel bearing	I		I	I	I		
** Steering mechanism bolts and nuts			T	T			
Steering bearing in Steering mechanism			Every 4000km/2485mile inspection or clean or lubricate				
Front shock absorber					I		
Rear shock absorber					I		
** Bolts and nuts for body and engine installation			T	T			M12：65±5/6.6±0.5 M16：80±5/8.2±0.5
Coolant	I			I		4 years or 40,000 kilometers (24855 mile)	
Gearbox oil			R		R		
** Valve clearance (cold inspection) In: 0.08～0.12mm (0.003～0.005 in) Row: 0.18～0.22mm (0.007～0.009 in)				I			

*This service is provided by a dealer or a qualified maintenance organization, if the owner has the appropriate tools, service information, and has a certain understanding of machinery, he can implement it by himself.

**For safety reasons, such items should be provided by dealers or qualified maintenance organizations.

D250/350/368 Maintenance schedule

I: inspection（Inspect and clean,adjust,lubricate or replace if necessary） R:replace **T**： Tighten ★:Comment

Check item	Inspection before driving	km/ mile Months	Initial 1000/621 Initial 3	Every 4000/2485 Every 15	Every 8000/4971 Every 30	Replace regularly	Torque N.m/kgf.m
Cradle buffer glue			Inspection every year or 10,000 kilometers (6214 mile)				
Air filter (filter element)				I	R		
Engine air inlet filter				R			
Bolts and nuts of muffler			T		T		M8：22±4/2.2±0.4 M10：55±5/5.6±0.5
** Spark plug					I		
Engine oil	I					★Note1	
Oil filter			R		R		
* Throttle body			I		I		
* Throttle cable clearance			I	I			
Idle speed			I	I			
* Fuel evaporative pollutant control system					I		
Radiator					I		
* Fuel pipe				I	I		
V belt						20,000 kilometers (12427 mile)	
** Braking System			I	I			
Brake hose				I		Check for leaks	
Brake fluid				I		Every 2 years	
** Tire/Wheel bearing	I		I	I	I		
** Steering mechanism bolts and nuts				T			First adjust nut 15±2/1.5±0.2;the second adjust nut align the first nut
Steering bearing in Steering mechanism			Every 4000km/2485mile inspection or clean or lubricate				
Front shock absorber	I				I		
Rear shock absorber	I				I		
** Bolts and nuts for body and engine installation			T	T			M12：65±5/6.6±0.5 M16：80±5/8.2±0.5
Coolant	I		I	I		3 years or 30,000 kilometers (18641 mile)	
Gearbox oil			R		R		
** Valve clearance (cold inspection) In: 0.08～0.12mm (0.003～0.005 in) Row: 0.18～0.22mm (0.007～0.009 in)			20,000 kilometers (12427 mile)				
Active wheel,driven wheel					I	★Note2	
Main bracket shaft							Clean and lubricate every 6000 kilometers

*This service is provided by a dealer or a qualified maintenance organization, if the owner has the appropriate tools, service information, and has a certain understanding of machinery, he can implement it by himself.

**For safety reasons, such items should be provided by dealers or qualified maintenance organizations.

★Note1: First maintenance for the first 1000 kilometers (621 mile) or 3 months (whichever comes first), second maintenance for the actual mileage of the instrument when the actual mileage reaches 4000 kilometers (2485 mile), and every 4000 kilometers (2485 mile) or 15 months thereafter (whichever comes first) Perform a regular maintenance.

★Note2： Active and driven wheel bushings are recommended to be maintained and lubricated every 10000km (6214 mile) with Shell brand Gadus S3 V220 C2 extreme pressure grease or high temperature resistant No.2 grease of the same viscosity to

ensure riding comfort. Transmission system: If it is found th at the driving speed has dropped significantly, it is recommended to maintain and inspect th e CVT transmission system at any time, and replace it in advance if necessary.

368D (ETC) Maintenance Schedule

I: Inspect (and if necessary, clean, lubricate, adjust, or replace) R: Replace T： Fasten ★: Note

Inspection Items	Check before driving	km/ mile	First 1000/621	Per 6000/2485	Per 12000/4971	Replace regularly	Torque Setting N.m/kgf.m
		Number of months	First 3	Per 15	Per 30		
Shaker frame cushioning rubber			Check once a year or every 10,000 kilometers (6,214 miles)				
Air Filter (Filter Element)				I	R		
Engine air intake filter				R			
Muffler bolts and nuts			T		T		M8：22±4/2.2±0.4 M10：55±5/5.6±0.5
** Spark plug					I		
Engine oil	I		★Note 1 Replace when the maintenance indicator light flashes				
Oil filter			R		R		
* Throttle body			I		I		
* Throttle cable clearance			I	I			
Idle			I	I			
* Fuel Evaporative Emission Control System					I		
Radiator tube				I			
* Fuel pipe				I			
V-belt					I	2 years or 20,000 kilometers（12427 mile）	
** Braking system			I	I			
Brake hose				I		Check for leaks	
Brake fluid				I		Every 2 years	
** Tire/Wheel Bearing	I		I	I	I		
** Bolts and nuts in the steering mechanism				T			
Steering bearing in the steering mechanism				I			
Front Shock Absorber	I				I		
** Rear shock absorber	I				I		
Internal mechanism of the faucet lock					I		
** Bolts and nuts for the car body and engine installation			T	T			M12：65±5/6.6±0.5 M16：80±5/8.2±0.5
Engine mount				I	I		
Coolant	I		I	I		3 years or 30,000 kilometers（18641 mile）	
Gearbox oil			R		R		
** Valve clearance (cold check) In：0.08～0.12mm(0.003～0.005 in) Out：0.18～0.22mm(0.007～0.009 in)			20,000 kilometers（12427 mile）				
Driving wheel, driven wheel					I	★Note 2	
Main bracket shaft							Clean and lubricate every 6000 kilometers

* This service is provided by dealers or qualified repair units. If the vehicle owner has the appropriate tools, service information, and some understanding of mechanics, they can perform it themselves.

** For safety reasons, such projects should be provided by dealers or qualified maintenance units.

★ Note 1: The first maintenance should be performed at 1,000 kilometers (621 miles) or 3 months (whichever comes first). The second maintenance should be done when the odometer reaches 4,000 kilometers (2,485 miles). Thereafter, regular maintenance should be performed every 4,000 kilometers (2,485 miles) or 15 months (whichever comes first).

★ Note 2: ① It is recommended to maintain and lubricate the drive wheel and driven wheel bushings every 10,000 kilometers (6,214 miles) using Shell Gadus S3 V220 C2 extreme pressure grease or a high-temperature grease of the same viscosity to ensure riding comfort. ② Transmission system: If a noticeable decrease in driving speed is observed, it is recommended to perform maintenance and inspection of the CVT transmission system as needed and replace it in advance if necessary.

危险 DANGER

●Initial maintenance should be carried out strictly according to the table above, otherwise it may cause vehicle damage or other unforeseen malfunctions.

●To keep your vehicle running properly, it is recommended to have it serviced by a dealer or a qualified repair facility. Improper maintenance or service may cause vehicle damage or other unforeseen malfunctions.

●Replacing substandard parts can cause your vehicle to wear out faster and shorten its lifespan.

●When inspecting the brake disc, muffler, spark plugs, coolant, and other items, you should wait until they have cooled down.

●When replacing brake fluid or coolant, take protective measures to avoid contact with skin and eyes, which can cause injury. At the same time, avoid spilling it on component surfaces, as it can damage paint or other surfaces.

注意 CAUTION

●Waste generated during maintenance, such as cleaning agents and used engine oil, should be properly handled and must not be disposed of carelessly to avoid environmental pollution.

●The items listed above refer to usage in normal environments. If they are frequently used in harsh conditions, the frequency of maintenance should be increased.

●The steering system, braking system, electronic fuel injection system, shock absorbers, and wheels are all critical components, and it is recommended that they be serviced by qualified maintenance units.

D368 Air filter (filter element), air inlet filter element

Step：

1. Support the vehicle firmly

Prop up the vehicle with the main bracket and put down the side bracket, as shown in the picture.



2. Remove the left engine cover

a. Press the center cylindrical pins of the expansion nail at the inner part of the back with 4# hex, and remove the the expansion nail. Remove the expansion nails from the top of the front part.

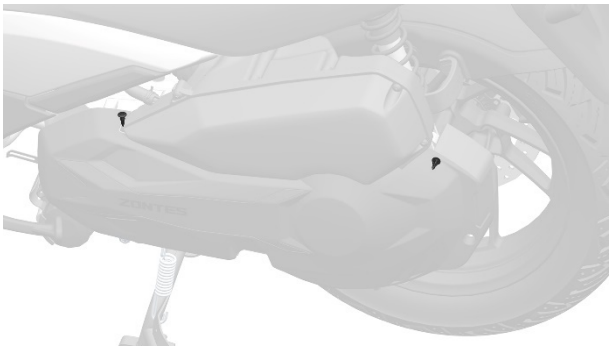

b. Remove the four hexagon M6x14 bolts shown with the 4# hex socket or T30 plum wrench to remove small flange bolt M6×16 +flanging bushing+buffer rubber.

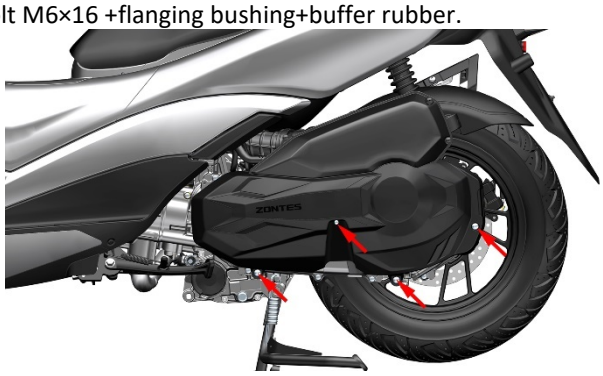

c. Pull out the two mushroom buttons on air filter decoration cover and remove the air filter decoration cover.

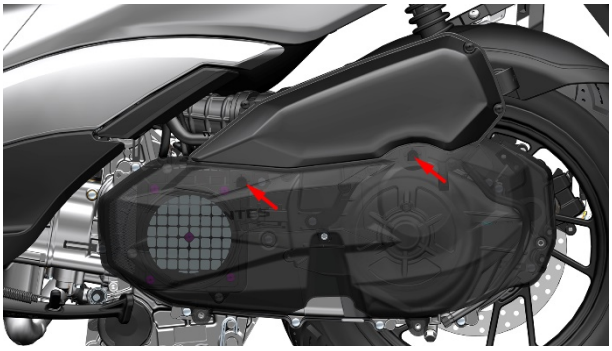

3. Replace the air inlet filter element

a. Use a Phillips screwdriver to remove the five tapping nails delivered with the air intake sponge filter assembly. Remove the air intake sponge after removing the front shell. Install the front shell back after replacing with new sponge. Pay attention to install the screws vertically and the torque should not be too large. The air intake sponge filter element is replaced every 4000 km (2485mile) or 15 months (whichever is reached first).

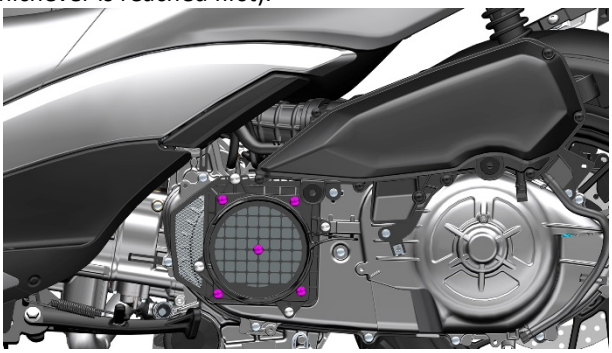

b. Remove the sponge and replace it with a new filter element. Note that the black side faces the engine and the white side faces out.



4. Remove the air filter shell

a. Use a Phillips screwdriver to remove the ten tapping nails.

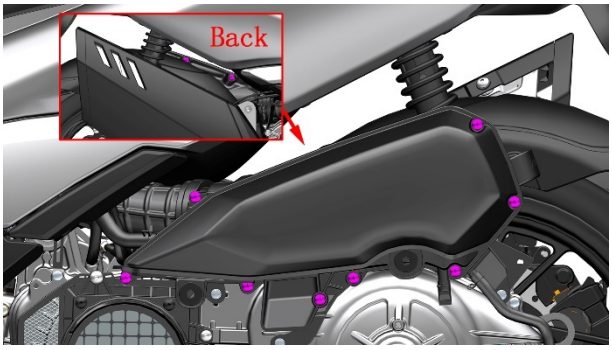

b. Remove the shell of the air filter.

5. Replace the filter element of the air filter

a. Use a Phillips screwdriver to remove the four screws used to secure the filter element from the air filter.

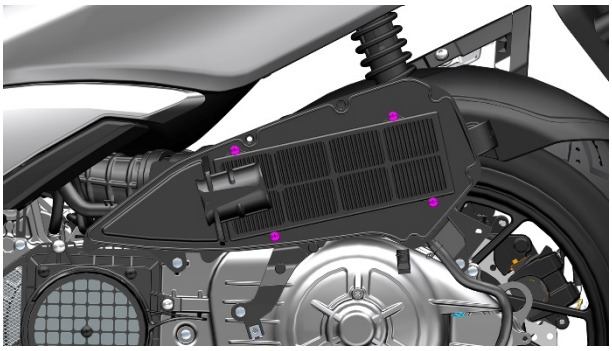

b. Remove the old empty filter element. Use the dust blower gun to clean the dust inside the inlet pipe and then wipe the inner wall clean with a clean non-woven cloth.

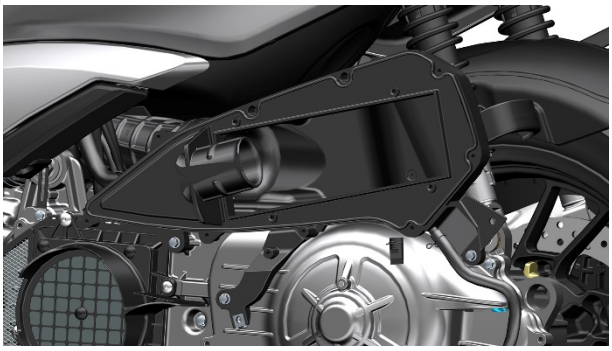

c. Replace the filter element and seal with a new one.

6. Check the waste oil pipe of air filter

After removing the rubber plug, use a flashlight to polish it from the bottom according to the arrow direction, and observe whether the waste oil drain pipe accumulates dirt or water through the rubber plug hole.If yes, use pliers to remove the waste oil pipe clamp ①, pull out the black plug, and then install it again after draining the waste oil or sewage.Pay attention to increase the inspection frequency when the air humidity is high. If there is too much dirt in the hose, be sure to check whether there is too much dirt or damage in the air filter element, and replace the air filter element if necessary.

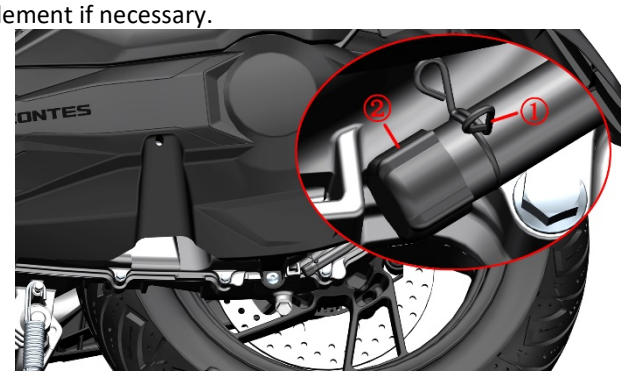

7. Reassembly

Refer to the procedure for removing the air filter housing to reassemble it.

DANGER

●The vehicle must be parked on a flat and stable ground or a lifting platform.

●The operation can only be performed after the engine has cooled down completely.

WARNING

●The air filter element is checked every 4000 kilometers or 15 months (whichever comes first), and replaced every 8000 kilometers or 30 months (whichever comes first). The air inlet sponge filter should be replaced every 4000 kilometers or 15 months (whichever comes first).
●The air filter element and the engine air inlet element should be cleaned regularly in accordance with the provisions of the regular maintenance and lubrication table.
●If you often ride in humid or dusty areas, you should check the air filter element more frequently. Be sure to inspect the waste oil pipe of the air filter frequently.
●If the filter element is damaged, it must be replaced, otherwise the dirt will be directed into the engine and cause damage to the engine.
●Ensure that the filter element is assembled in place.

CAUTION

●If the air filter is clogged with dust, the air intake resistance will increase and the output power will decrease.
●If the filter element of the engine air intake is blocked by dust, the air intake resistance will increase, which will reduce the heat dissipation of the belt and affect the life of the belt.
●If the replacement period is not reached, the surface of the filter element is clean without damage, and you can use a dust blow gun to blow air from the clean side of the filter element to blow away the dust on the surface of the filter element.
●Do not let water enter the air filter when washing the vehicle.

D350 Air filter (filter element), air inlet filter element

Step：

1. Support the vehicle firmly

Prop up the vehicle with the main bracket and put down the side brackets, as shown in the figure.



2. Remove the left engine cover

a.Use 4# inner hexagon to remove the swell nail for air filter decorative cover bottom plate.

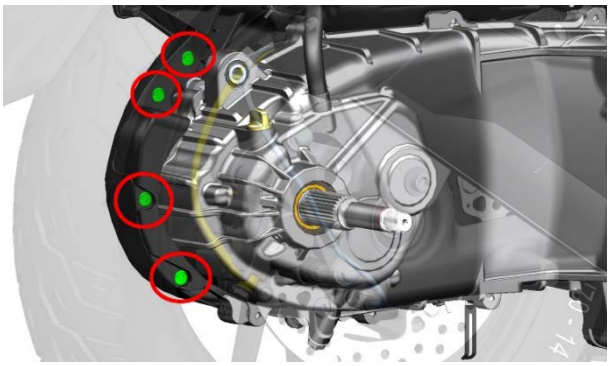

b.Use 4# inner hexagon to remove the M6×14 bolt as shown in the figure. The bolt here cannot be removed temporarily, just loosen it completely.

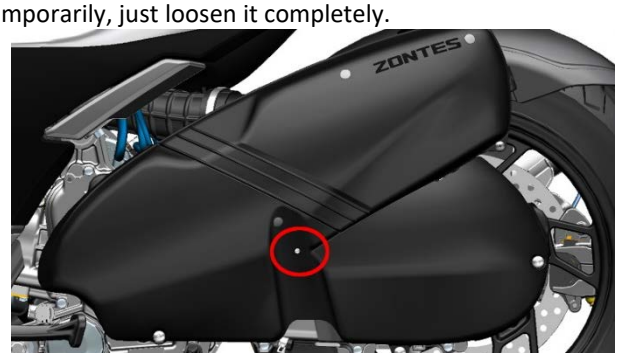

c.Use 4# inner hexagon to remove the 3 M6×14 bolts as shown in the figure. Use 4# inner hexagon to remove the swell nail.

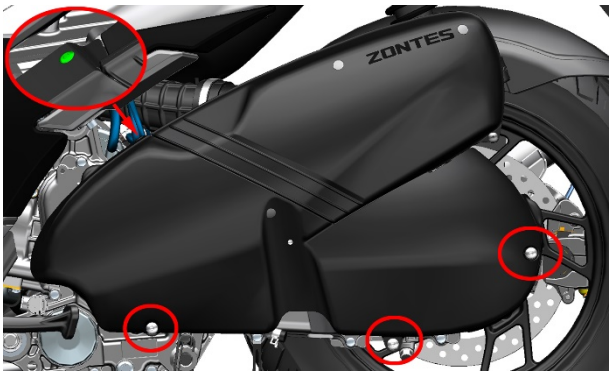

3. Remove the air inlet cover

a. Use a cross screwdriver to remove four self tapping screws from the air inlet sponge filter element assembly. Remove the air inlet sponge after removing the front shell. Replace the front housing with a new sponge. Note that the screws should be installed vertically and the torque should not be too large. The sponge filter element at the air inlet shall be replaced every 4000km (2485mile) or 15 months (whichever comes first).



4. Replace the air inlet filter

a. Remove the sponge and replace it with a new filter element. Note that the black side faces the engine and the white side faces outward.



5. Remove the air filter housing

a. Use 4 # hexagonal socket to push 2 pieces of decorative glue into the air filter.



b.Use a Phillips screwdriver to remove the 2 screws.



c.Use a Phillips screwdriver to remove the 4 screws that fix the housing of the air filter.

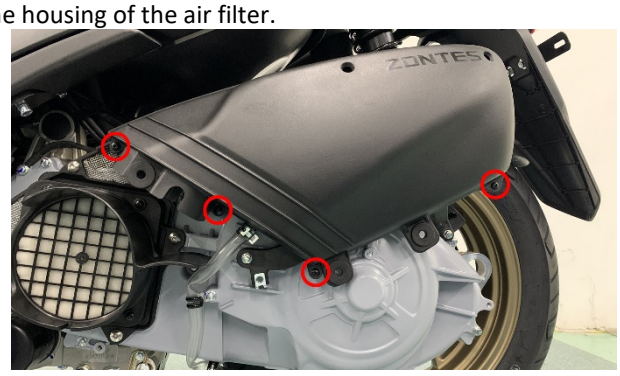

d. Remove the air filter housing.



e. Place the rubber plug and tapping screw properly to avoid loss.

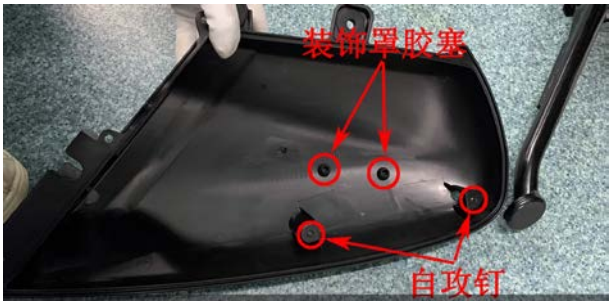

6. Replace Air filter element

a. Use a Phillips screwdriver to remove the 6 screws that fix the filter element that comes with the air filter.

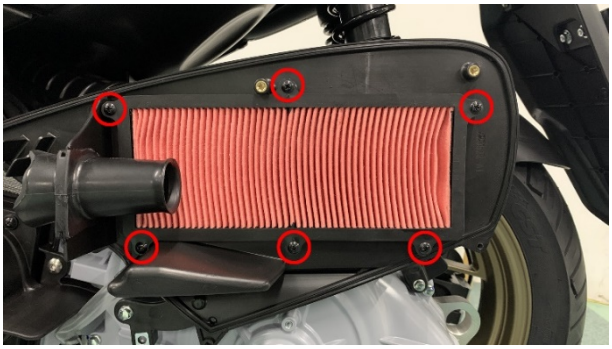

b. Remove the old air filter element. Blow the dust inside the air inlet pipe with a dust blower, and then wipe the inner wall with a clean non-woven cloth.



c. Replace the new filter element and sealing strip.

7. Inspection air filter waste oil pipe

After removing the rubber stopper, use a flashlight to light from directly below according to the direction of the arrow, and observe whether the waste oil drain pipe accumulates dirt or water through the rubber plug hole. If there is, remove the waste oil pipe clamp (1) with pliers and pull out the black plug, and put the waste oil or sewage back after draining. Pay attention to increase the frequency of inspection appropriately when the air humidity is large. If there is excessive dirt in the hose, be sure to check the air filter element for excessive dirt or damage, and replace the air filter element if necessary.

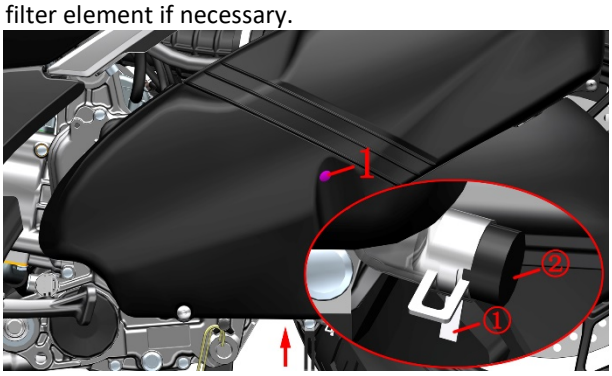

8. Reinstall

a. Refer to the steps of removing the filter housing to install the housing back.

b. Clip M6×14 bolts to the inner step hole of the engine left cover, and then use a 4# inner hexagon to penetrate from the outside and hold the bolt





c. Align the left bolt with the mounting hole and tighten it.



d. Use 4# inner hexagon to install the other 4 M6×14 bolts. Replace the decorative buckle.

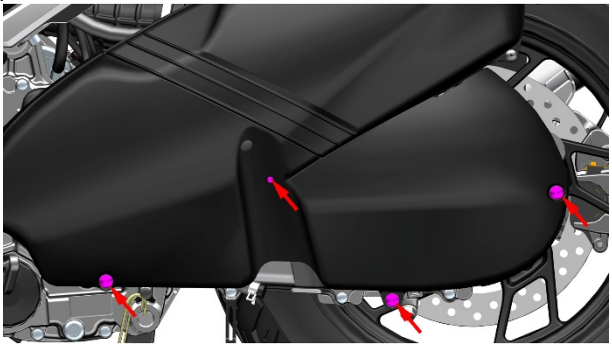

DANGER

●The vehicle must be parked on a flat and stable ground or a lifting platform.
●The operation can only be performed after the engine has cooled down completely.

WARNING

●The air filter element shall be checked every 4000km (2485 miles) or 15 months (whichever comes first), and replaced every 8000km (4971 miles) or 30 months (whichever comes first). The sponge filter element at the air inlet shall be replaced every 4000km (2485 miles) or 15 months (whichever comes first).
●The air filter element and the engine air inlet element should be cleaned regularly in accordance with the provisions of the regular maintenance and lubrication table.
●If you often ride in humid or dusty areas, you should check the air filter element more frequently. Be sure to inspect the waste oil pipe of the air filter frequently.
●If the filter element is damaged, it must be replaced, and otherwise the dirt will be directed into the engine and cause damage to the engine.
●Ensure that the filter element is assembled in place.

CAUTION

●If the air filter is clogged with dust, the air intake resistance will increase and the output power will decrease.
●If the filter element of the engine air intake is blocked by dust, the air intake resistance will increase, which will reduce the heat dissipation of the belt and affect the life of the belt.
●If the replacement period is not reached, the surface of the filter element is clean without damage, and you can use a dust blow gun to blow air from the clean side of the filter element to blow away the dust on the surface of the filter element.
●Do not let water enter the air filter when washing the vehicle.

D125 Air filter (filter element), air inlet filter element

Step：

1. Support the vehicle firmly

Prop up the vehicle with the main bracket and put down the side brackets, as shown in the figure.



2. Remove the left engine cover

a. Use your fingers to pull out the decorative buckle.

Use 4# inner hexagon to remove the M6×14 bolt as shown in the figure. The bolt here cannot be removed temporarily, just loosen it completely.

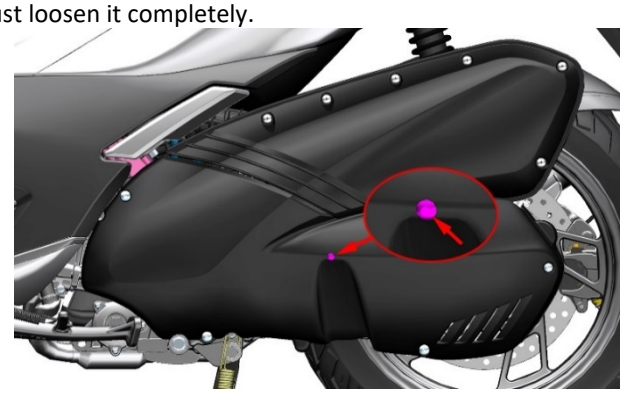

b. Use 4# inner hexagon to press down the center cylindrical pins of the 2 swell nails, and then remove the swell nails and the engine rear decorative cover.

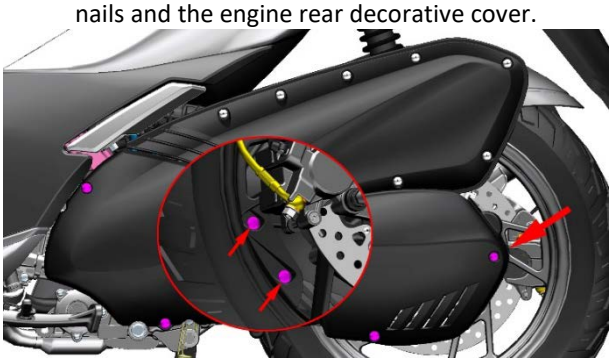

c. Use 4# inner hexagon to remove the 4 pcs Hexagon socket head screw M6×14 bolts as shown in the figure.

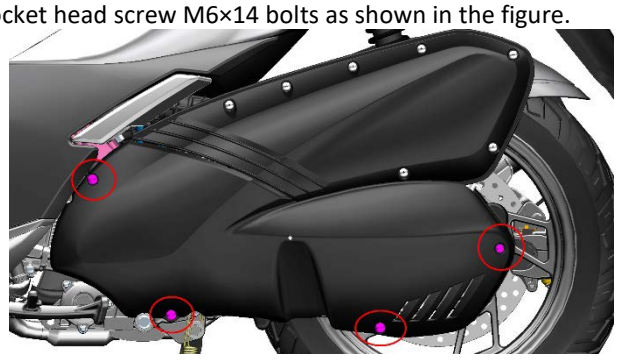

d. Remove the front part of the left engine cover. The bolts removed in the second step will fall off at this time.

3. Replace the air inlet filter

Use a corss screwdriver to remove the 4 self-tapping screws that come with the air inlet sponge filter assembly. Remove the air inlet sponge after removing the front cover. After replacing the new sponge, put the front shell back, pay

attention to the screws should be installed vertically and the torque should not be too large. The air inlet sponge filter should be replaced every 8000 kilometers (4971 miles) or 12 months (whichever comes first).

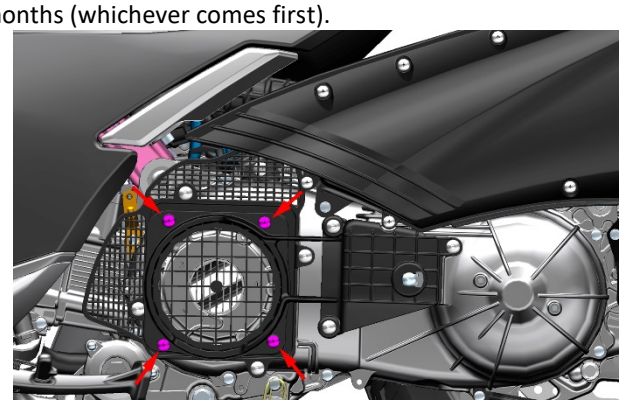

b. Remove the sponge and replace it with a new filter element. Note that the black side faces the engine and the white side faces outward



4. Remove the air filter housing

a. Use a Phillips screwdriver to remove the 9 pcs screws that fix the housing of the air filter.

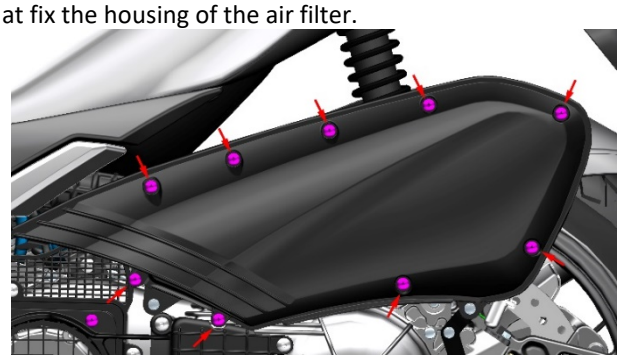

b. Remove the air filter housing.

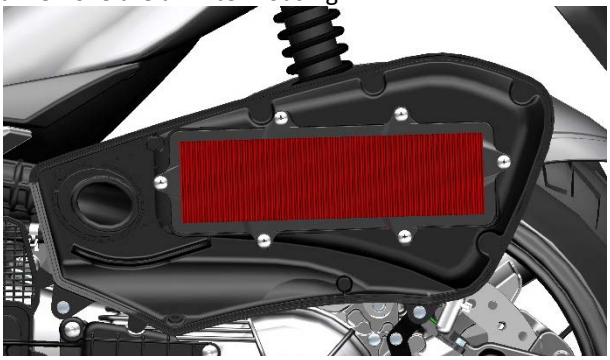

5. Replace Air filter element

a. Use a Phillips screwdriver to remove the 6 screws that fix the filter element that comes with the air filter.

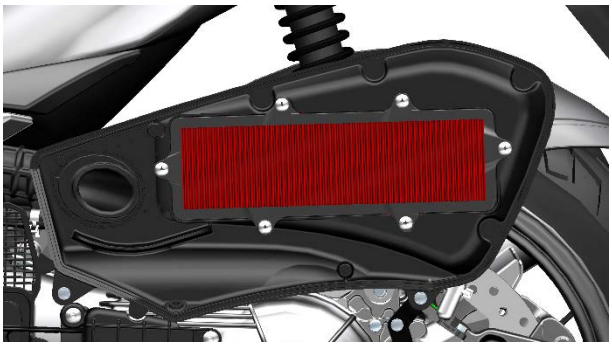

b. Remove the old air filter element. Blow the dust inside the air inlet pipe with a dust blower, and then wipe the inner wall with a clean non-woven cloth.



c. Replace the new filter element and sealing strip.

6. Inspection air filter waste oil pipe

Wipe clean the surface of the waste oil pipe and visually check for liquid. If so, use pliers to remove the waste oil pipe clamp, clean the waste oil pipe, and then reinstall it. Pay attention to increase the frequency of inspection appropriately when the air humidity is high.



7. Reinstall

a. Refer to the steps of removing the filter housing to install the housing back.

b. Replace the air inlet baffle and the air inlet cover of the replaced air inlet filter element.

c. Clip M6×14 bolt to the inner step hole of the engine left cover, and then use a 4# inner hexagon to penetrate from the outside and hold the bolt





d. Align the left bolt with the mounting hole and tighten it.



e. Use 4# inner hexagon to install the other 4 M6×14 bolts. Replace the decorative buckle.

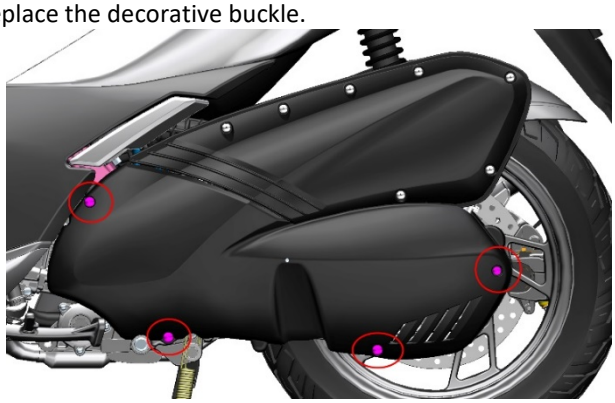

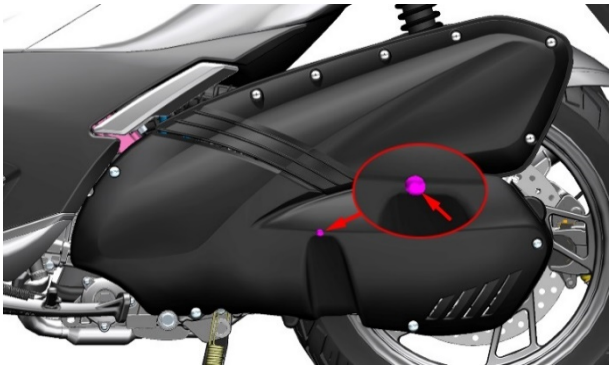

f. Reinstall the engine rear decorative cover.

DANGER

●The vehicle must be parked on a flat and stable ground or a lifting platform.
●The operation can only be performed after the engine has cooled down completely.

WARNING

●The air filter element is checked every 4000 kilometers or 6 months (whichever comes first), and replaced every 6000 kilometers or 12 months (whichever comes first).
●The air filter element and the engine air inlet element should be cleaned regularly in accordance with the provisions of the regular maintenance and lubrication table.
●If you often ride in humid or dusty areas, you should check the air filter element more frequently. Be sure to inspect the waste oil pipe of the air filter frequently.
●If the filter element is damaged, it must be replaced, otherwise the dirt will be directed into the engine and cause damage to the engine.
●Ensure that the filter element is assembled in place.

CAUTION

●If the air filter is clogged with dust, the air intake resistance will increase and the output power will decrease.
●If the filter element of the engine air intake is blocked by dust, the air intake resistance will increase, which will reduce the heat dissipation of the belt and affect the life of the belt.
●If the replacement period is not reached, the surface of the filter element is clean without damage, and you can use a dust blow gun to blow air from the clean side of the filter element to blow away the dust on the surface of the filter element.
●Do not let water enter the air filter when washing the vehicle.

D125(2024)/D155 Air filter (filter element), air inlet filter element

Step：

1. Support the vehicle firmly

Prop up the vehicle with the main bracket and put down the side brackets, as shown in the figure.



2. Remove the left engine cover

a. Use your fingers to pull out the decorative buckle.

Use 4# inner hexagon to remove the M6×14 bolt as shown in the figure. The bolt here cannot be removed temporarily, just loosen it completely. Use 4# inner hexagon to remove the 4 M6×14 bolts as shown in the figure.

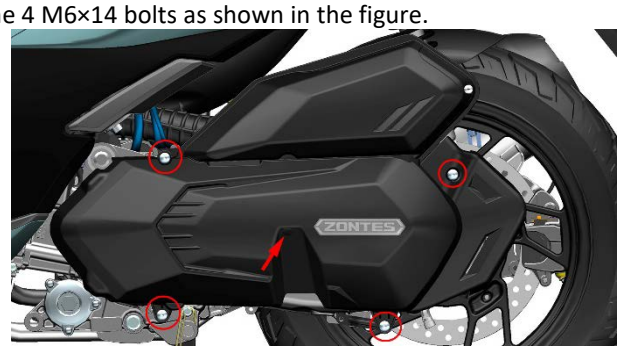

3. Remove the air intake cover

Use a corss screwdriver to remove the 5 self-tapping screws that come with the air inlet sponge filter assembly. Remove the air inlet sponge after removing the front cover. After replacing the new sponge, put the front shell back, pay attention to the screws should be installed vertically and the torque should not be too large. The air inlet sponge filter should be replaced every 6000 kilometers (3728 miles) or 12 months (whichever comes first).

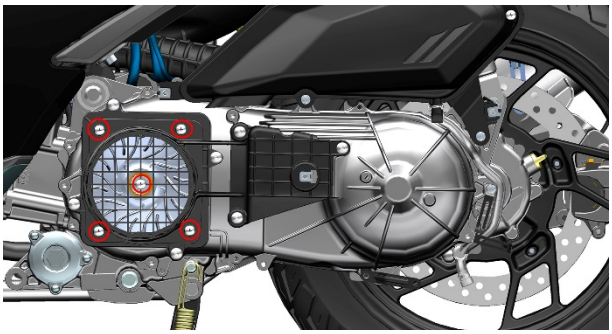

4. Replace the air inlet filter element

a. Remove the sponge and replace it with a new filter element. Note that the black side faces the engine and the white side faces outward



5. Replace Air filter element

a. Use a Phillips screwdriver to remove the bolt.remove the Air filter element cover.



b. Remove the old air filter element. Blow the dust inside the air inlet pipe with a dust blower, and then wipe the inner wall with a clean non-woven cloth.



c. Replace the new filter element and sealing strip.

6. Inspection air filter waste oil pipe

Wipe clean the surface of the waste oil pipe and visually check for liquid. If so, use pliers to remove the waste oil pipe clamp, clean the waste oil pipe, and then reinstall it. Pay attention to increase the frequency of inspection appropriately when the air humidity is high.

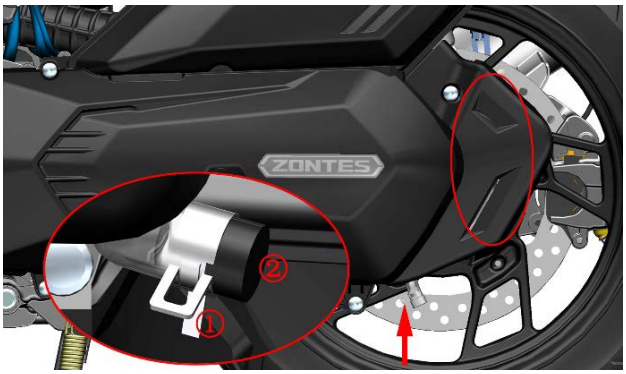

7. Reinstall

a. Refer to the steps of removing the filter housing to install the housing back.

b. Replace the air inlet baffle and the air inlet cover of the replaced air inlet filter element.

c. Clip M6×14 bolt to the inner step hole of the engine left cover, and then use a 4# inner hexagon to penetrate from the outside and hold the bolt

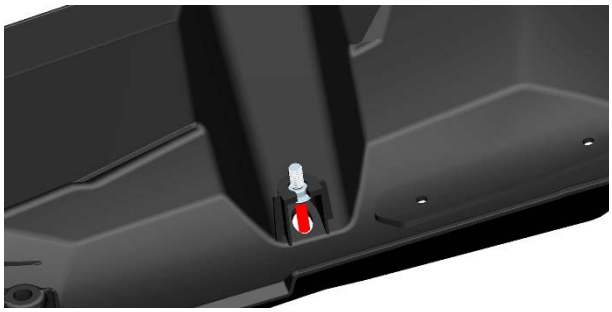

d. Align the left bolt with the mounting hole and tighten it.Put the 4 bolts back in with the 4# inner hexagon.

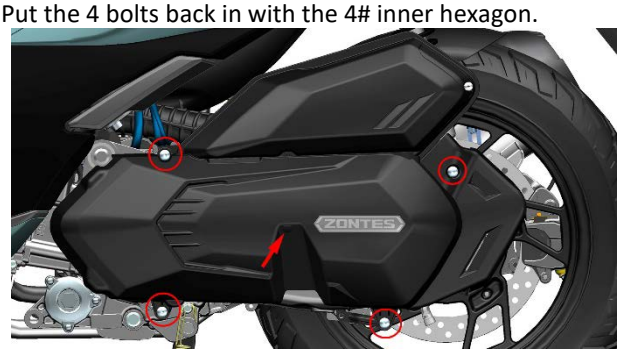

DANGER

●The vehicle must be parked on a flat and stable ground or a lifting platform.

●The operation can only be performed after the engine has cooled down completely.

WARNING

●The air filter element is checked every 4000 kilometers or 6 months (whichever comes first), and replaced every 6000 kilometers or 12 months (whichever comes first).

●The air filter element and the engine air inlet element should be cleaned regularly in accordance with the provisions of the regular maintenance and lubrication table.

●If you often ride in humid or dusty areas, you should check the air filter element more frequently. Be sure to inspect the waste oil pipe of the air filter frequently.

●If the filter element is damaged, it must be replaced, otherwise the dirt will be directed into the engine and cause damage to the engine.
●Ensure that the filter element is assembled in place.

CAUTION

●If the air filter is clogged with dust, the air intake resistance will increase and the output power will decrease.
●If the filter element of the engine air intake is blocked by dust, the air intake resistance will increase, which will reduce the heat dissipation of the belt and affect the life of the belt.
●If the replacement period is not reached, the surface of the filter element is clean without damage, and you can use a dust blow gun to blow air from the clean side of the filter element to blow away the dust on the surface of the filter element.
●Do not let water enter the air filter when washing the vehicle.

D250 Air filter (filter element), air inlet filter element

Step：

1. Support the vehicle firmly

Prop up the vehicle with the main bracket and put down the side brackets, as shown in the figure.



2. Remove the left engine cover

a. Use your fingers to pull out the decorative buckle,Use 4# inner hexagon to remove the M6×14 bolt as shown in the figure. The bolt here cannot be removed temporarily, just loosen it completely.

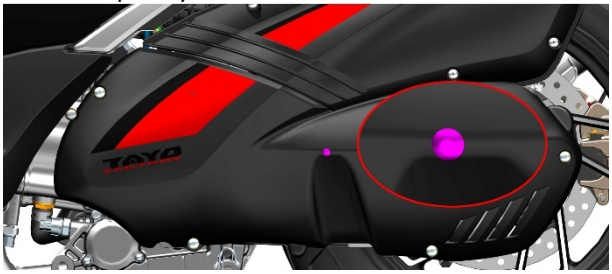



b. Use 4# inner hexagon to remove the 4 M6×14 bolts as shown in the figure.



c. Pull out the front part of the left engine cover first and then move it about 30mm (1.2 in) in the direction of the rear mudguard to remove it. The bolts removed in the second step will fall off at this time.



3. Remove the air inlet cover

a. Use 4# inner hexagon to remove the M6×16 bolt as shown in the figure. The bolt here cannot be removed temporarily, just loosen it completely.



b. Use 4# inner hexagon to remove the 3 M6×14 bolts as shown in the figure.

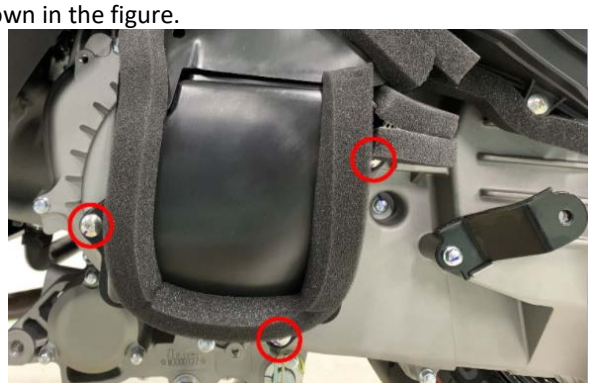

c. Remove the air inlet cover and the air inlet filter element together. Remove the rubber strip on the box.

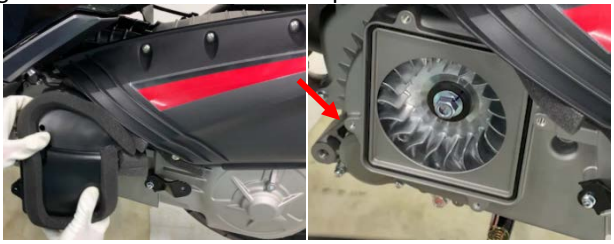

4. Replace the air inlet filter

a. Remove the old air inlet filter element and the rubber strip on the air inlet cover. Use a blow gun to blow away the dust on the inside, then wipe the inner wall dry with a clean non-woven fabric.



b. Replace with 2 new rubber strips (one is installed in the air inlet cover, the other is installed in the box). Take out the new air inlet filter element and install it into the air inlet cover in the direction shown.





5. Remove the air filter housing

a. Use a Phillips screwdriver to remove the 9 screws that fix the housing of the air filter.

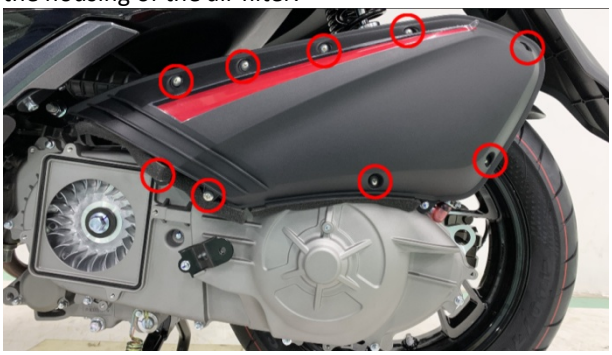

b. Remove the air filter housing.



6. Replace Air filter element

a. Use a Phillips screwdriver to remove the 6 screws that fix the filter element that comes with the air filter.



b. Remove the old air filter element. Blow the dust inside the air inlet pipe with a dust blower, and then wipe the inner wall with a clean non-woven cloth.



c. Replace the new filter element and sealing strip.

7. Inspection air filter waste oil pipe

Wipe clean the surface of the waste oil pipe and visually check for liquid. If so, use pliers to remove the waste oil pipe clamp, clean the waste oil pipe, and then reinstall it. Pay attention to increase the frequency of inspection appropriately when the air humidity is high.



8. Reinstall

a. Refer to the steps of removing the filter housing to install the housing back.

b. Replace the air inlet baffle and the air inlet cover of the replaced air inlet filter element.



c. If the original scooter has a shock-proof sponge, it needs to be placed well, if not, go to the next step.



d. Clip M6×14 bolts to the inner step hole of the engine left cover, and then use a 4# inner hexagon to penetrate from the outside and hold the bolt





e. Align the left bolt with the mounting hole and tighten it.



f. Before installing other bolts, install the exposed sponge and plug it back into the left cover.



g. Use 4# inner hexagon to install the other 4 M6×14 bolts. Replace the decorative buckle.



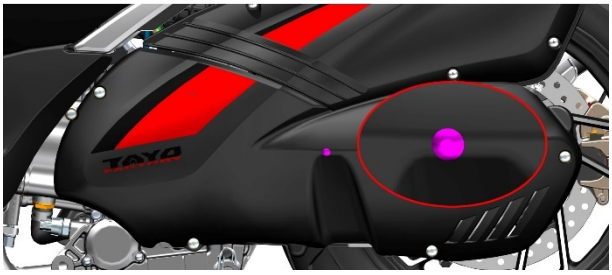

DANGER

●The vehicle must be parked on a flat and stable ground or a lifting platform.
●The operation can only be performed after the engine has cooled down completely.

WARNING

●The air filter element and the engine air inlet element should be replaced every 10000km (621 mile).
●The air filter element and the engine air inlet element should be cleaned regularly in accordance with the provisions of the regular maintenance and lubrication table.
●If you often ride in humid or dusty areas, you should check the air filter element more frequently. Be sure to inspect the waste oil pipe of the air filter frequently.
●If the filter element is damaged, it must be replaced, and otherwise the dirt will be directed into the engine and cause damage to the engine.
●Ensure that the filter element is assembled in place.

CAUTION

●If the air filter is clogged with dust, the air intake resistance will increase and the output power will decrease.
●If the filter element of the engine air intake is blocked by dust, the air intake resistance will increase, which will reduce the heat dissipation of the belt and affect the life of the belt.
●If the replacement period is not reached, the surface of the filter element is clean without damage, and you can use a dust blow gun to blow air from the clean side of the filter element to blow away the dust on the surface of the filter element.
●Do not let water enter the air filter when washing the vehicle.

368D (ETC) Air Filter (Filter Element), Intake Air Filter Elemen

Steps：

1、Securely support the vehicle

Support the vehicle with the main stand and lower the side stand, as shown in the diagram.



2、Remove the left engine cover

a. Use a #4 hex key to press down the center cylindrical pin of the expansion plug at one point on the inner side of the rear. Remove the expansion plug from the top surface of the rear. Remove the front expansion plug in the same way.

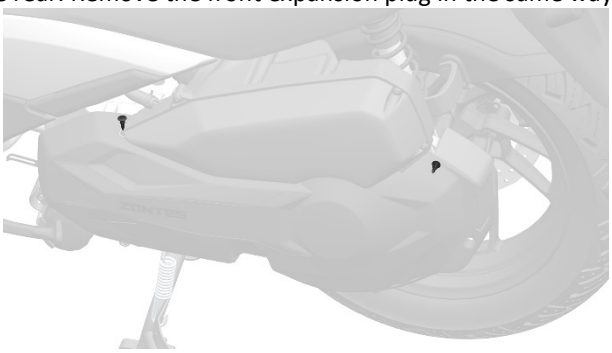

b. Use a T30 Torx wrench to remove the 4 small M6×16 flange bushings and rubber pads.

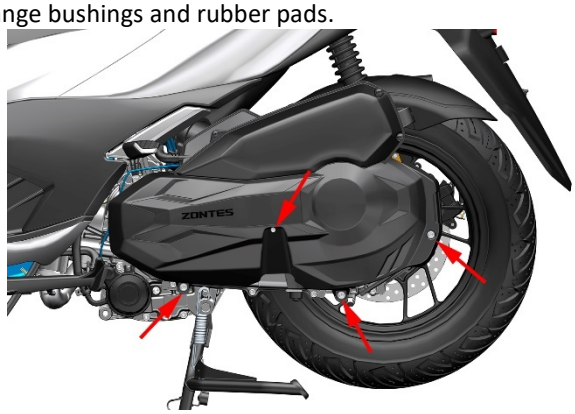

c. Pull out the two mushroom fasteners on the air filter cover and remove the air filter cover.



3、Replace the air inlet filter

a. Use a Phillips screwdriver to remove the five self-tapping screws from the intake sponge filter assembly. After removing the front cover, take out the intake sponge. After replacing it with a new sponge, reinstall the front cover, making sure the screws are installed vertically and not over-tightened. The intake sponge filter should be replaced every 6,000 kilometers (3,728 miles) or 15 months, whichever comes first.

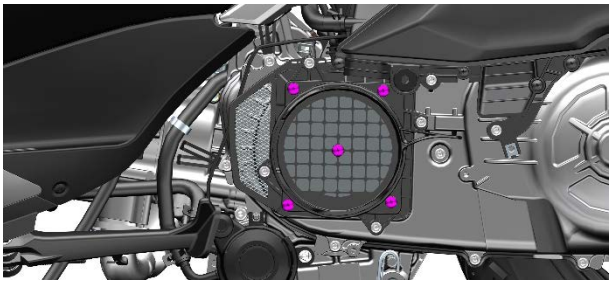

b. Remove the sponge and replace it with a new filter element, making sure the black side faces the engine and the white side faces outward.



4、Remove the air filter housing

a. Use a Phillips screwdriver to remove 10 self-tapping screws.

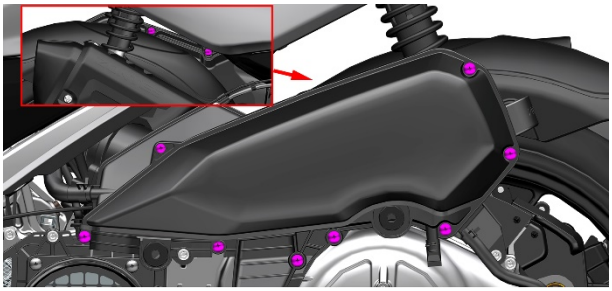

b. Remove the air filter housing.

5、Replace the air filter element

a. Use a Phillips screwdriver to remove the 4 screws that secure the filter element in the air filter.

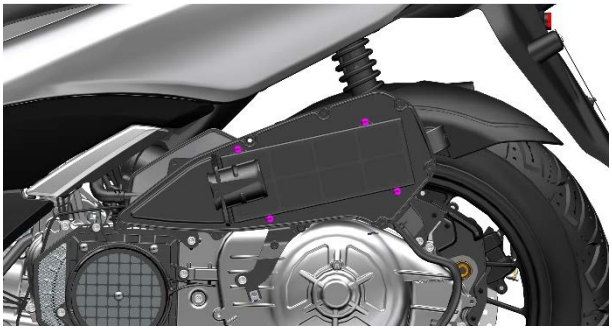

b. Remove the old air filter element. Use an air blower to blow the dust off the inside of the intake pipe, then wipe the inner wall clean with a clean non-woven cloth.

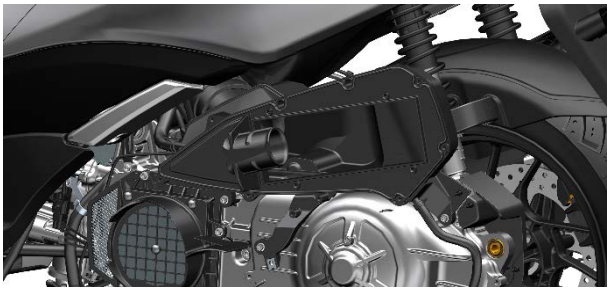

c. Replace with a new filter cartridge and sealing strip.

6、Check the air filter oil drain pipe

Check the waste oil drain pipe for any accumulation of dirt or standing water. If there is any, use pliers to remove the waste oil pipe clamp ① and pull out the black plug, then drain the waste oil or wastewater before reinstalling it. Note that when the air humidity is high, the inspection frequency should be increased appropriately. If there is excessive dirt inside the hose, be sure to check whether the air filter element has too much dirt or is damaged, and replace the air filter element if necessary.

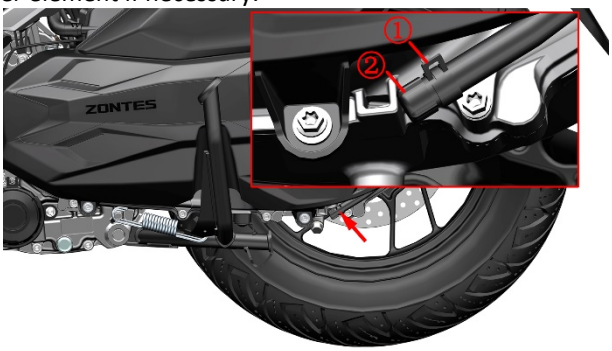

7、Reinstall

Reassemble according to the disassembly steps.

Bolts and nuts of muffler

1. Check for air leaks at the engine exhaust.

a. If there is a slight air leak, first try to tighten the exhaust port nut with 6# inner hexagon; if the problem is not solved, remove the muffler and replace with a new engine exhaust port gasket.

b. If there is no sign of air leakage, use 6# inner hexagon to check whether the M8 nut at the exhaust port of the engine is loose.

150D Muffler：

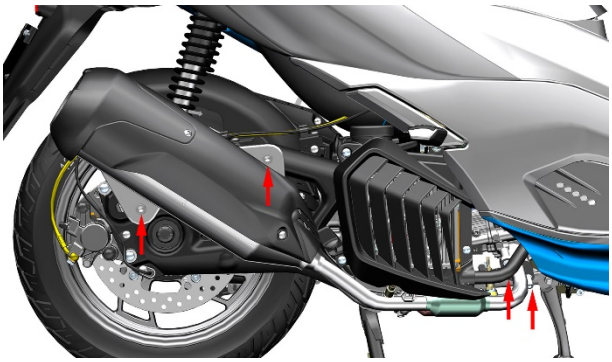

350D Muffler：

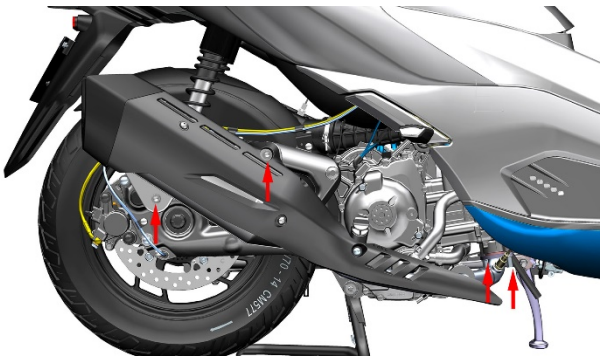

368D Muffler：

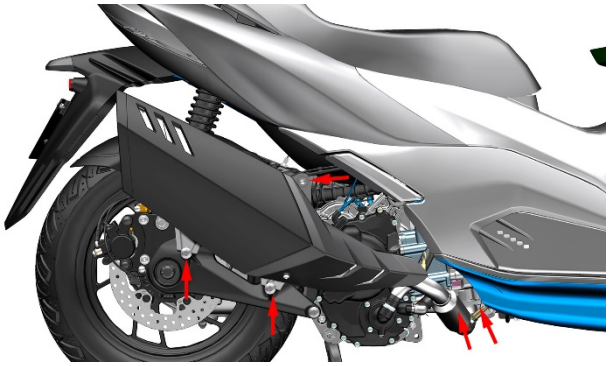

368D（ETC）消声器：

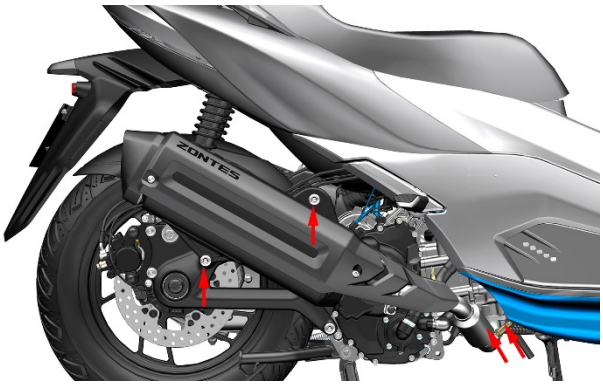

150D/350D Muffler：

Use the 8# hexagon to check whether the bolts connected to the silencer and the rear rocker arm are loose. Standard torque: 53 N.m.

368D MUffler：

Use the 8# hexagon socket to check the bolt at the upper connection of the silencer, and use the 14# sleeve to check whether the bolt connected to the lower part of the silencer is loose. Standard torque: 53 N.m.

368D(ETC) Muffler：

Use a 13# socket to check the bolts at the connection between the rear section of the muffler and the rear swing arm, and use a 13# socket to check the bolts at the upper connection. Standard torque: 53 N.m.

2. Check for nut and bolts at the muffler

Use the 8# inner hexgon socket to inspection whether the 2 pcs bolts at the junction of the rear muffler and the swingarm are loose.

DANGER

●Do not touch all metal surfaces of the muffler while the engine is running or after riding to prevent burns.
●The vehicle must be parked on a flat and stable ground or a lifting platform.
●If you need to replace the new exhaust port gasket, you must wait for the muffler to cool down completely before starting operation.

WARNING

●Do not blast the throttle for a long time on the spot.
●Large load and long-term low-speed driving will damage the engine and muffler.
●It is forbidden to use leaded gasoline to avoid the loss of exhaust gas purification ability due to catalyst failure.

CAUTION

●If you need to remove the muffler for other operations, it is recommended to cover the air inlet and outlet holes of the muffler with textured paper to prevent foreign objects from entering.









●Keep the drain hole at the bottom of the muffler unblocked to prevent condensation water from accumulating in the muffler cavity.

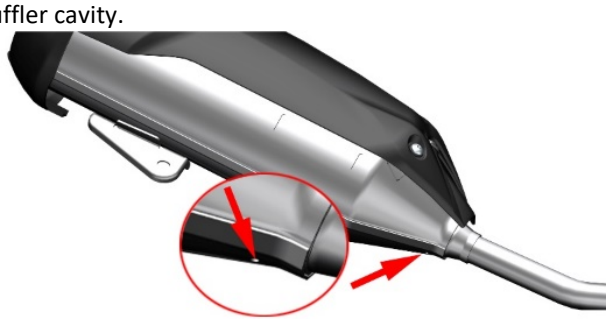

●Clean up the dirt, dirt and other stains on the surface of the muffler in time.

Spark plug

Caution:

●Before disassembling, blow off the dust near the spark plug with a dust blower.

●After removing the spark plug, prevent foreign objects from falling into the engine.

●The procedure for disassembling D125/D250 and D350 is the same

1. Disassemble the spark plug D350/D250/D368

a. Put down the left rear pedal and use the 4# inner hexagon to remove the M6×14 bolts.

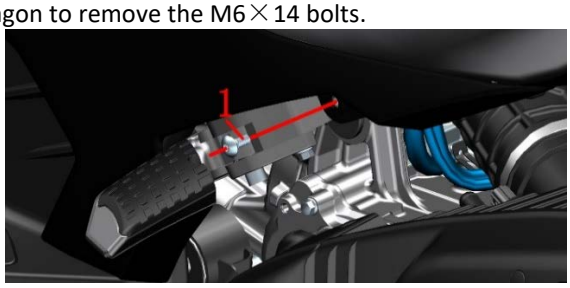

b. Pull out in sequence in the direction of the arrow (from the rear wheel to the front wheel). Note that there are 5 staples at the red circle and a circle of buckles around. It takes a lot of force to pull out.

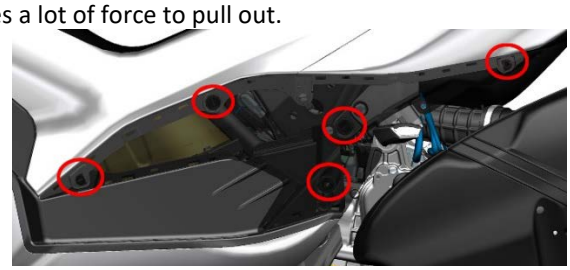

c. Buckle the 2 decorative bolt buckles (3) first. Remove the 4 M6×16 bolts (2) of the rear compartment with 4# Allen. Press the center cylindrical pin of the 2 expansion nails with 4# Allen and remove the expansion nails. Finally, remove the rear compartment.

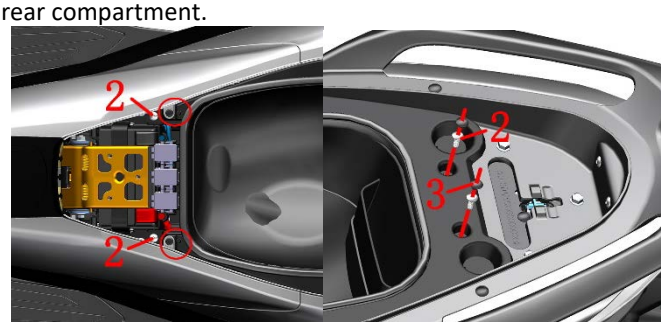

d. Using Screwdriver for cruciform head remove the 2 screw to upper cover

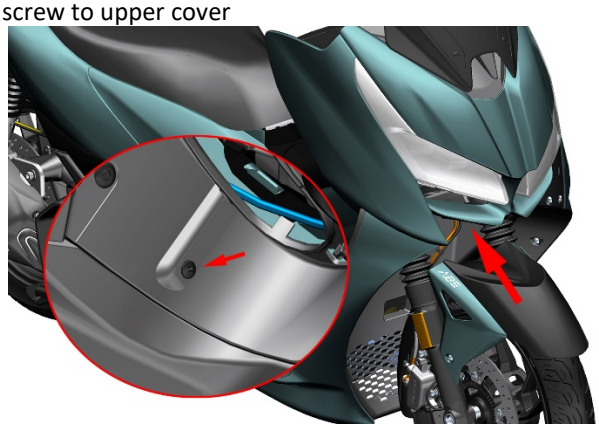

e. Remove the M6×22 bolts (4) of the rear compartment with a # sleeve, remove the bushing (5) and seating glue (6). Press the center cylindrical pin of the expansion nail on the left side of the tank cover plate with 4# Allen and remove the expansion nail. Finally, remove the left part of the fuel tank cover.

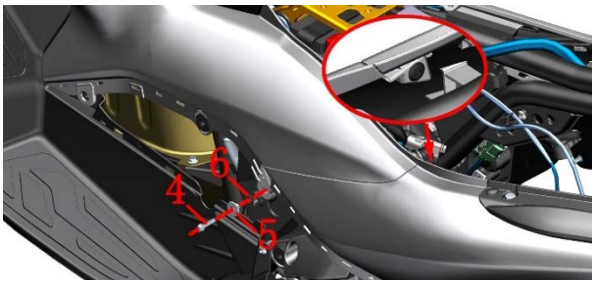

f. Start by snapping the 4 decorative bolt buckles. Remove the 4 M6×14 shoulder bolts (1) of the windshield with 4# Allen. Remove the windshield cover, windshield pad, and sun visor.

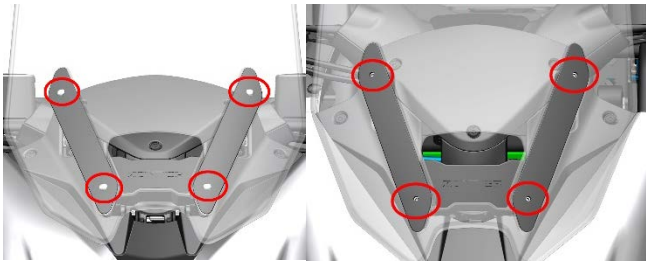

g. Press the center cylindrical pin of the 3 expansion nails with 4# Allen and remove the expansion nails. Finally, remove the front visor.

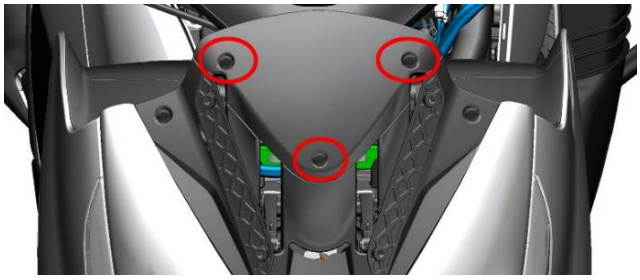

h. Press the center cylindrical pin of the 4 expansion nails with 4# Allen and remove the expansion nails. Remove the screws with a cross-cut (7). Remove the 2 M6×14 shoulder bolts (1) of the windshield with 4# Allen. Finally, remove the blue part of the picture together.

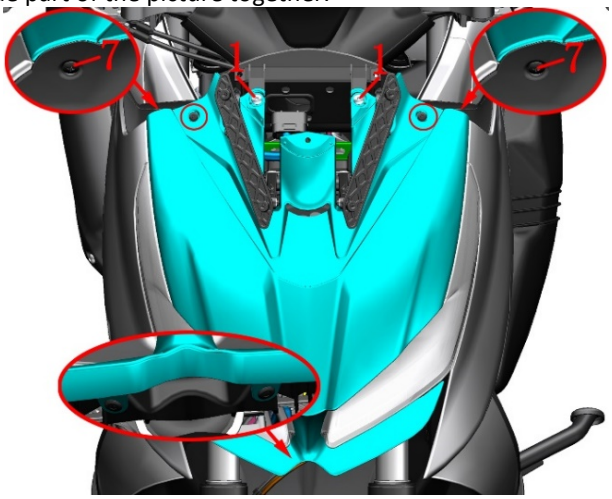

i. Remove the M6×14 shoulder bolt (1) of the left panel of the front with #14 Allen. Remove the M6×12 bolts (8) connecting the front left panel to the front left panel backing with 4# Allen. Press the center cylindrical pin of the expansion nail with 4# Allen and remove the expansion nail. Remove the front panel.

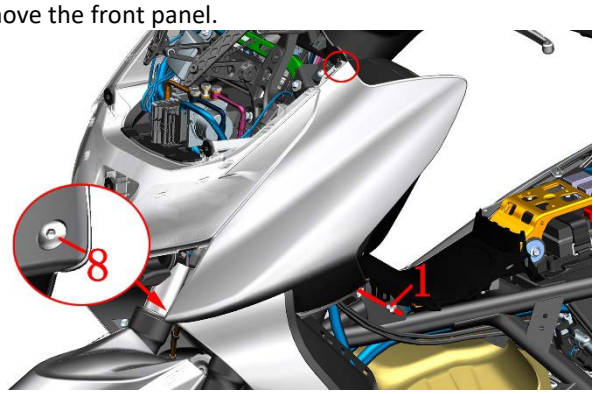

j. Use your fingers or a plastic crowbar to insert the arrow indication point, first pry the arrow indication point open the gap and then pull up.

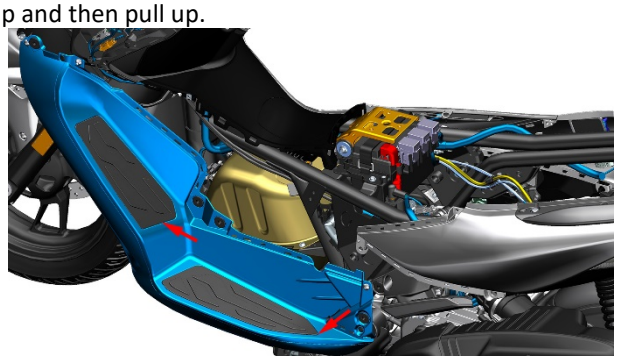

k. Respectively use 4# inner hexagon to remove the 3 M6 ×14 bolts at the front pedal.

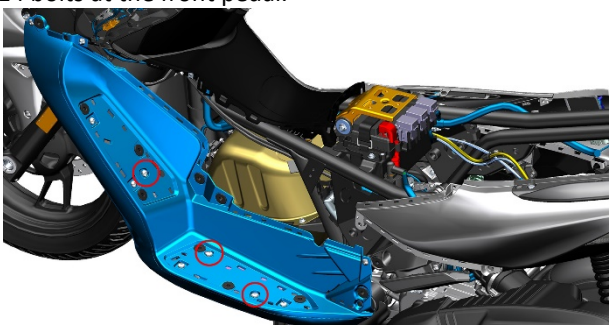

l. Use 4# inner hexagon to remove the 3 M6×14 bolts that surround the left side(1).

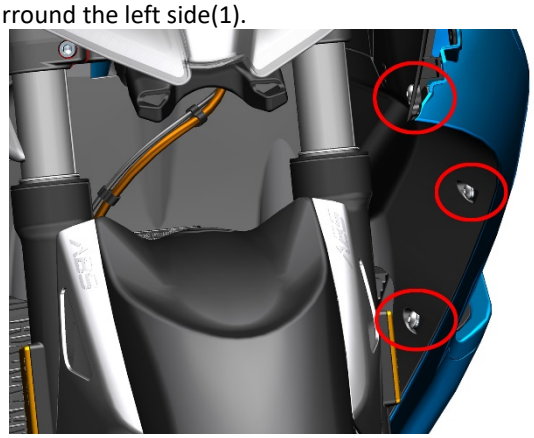

n. Use 4# inner hexagon to press down the center cylindrical pins of the 2 swell nails on the left, and then remove the swell nails. Remove the bolt on the left front part with a 4# inner hexagon For instructions on disassembly and assembly of swell nails,please refer to the pre-service instructions in this chapter

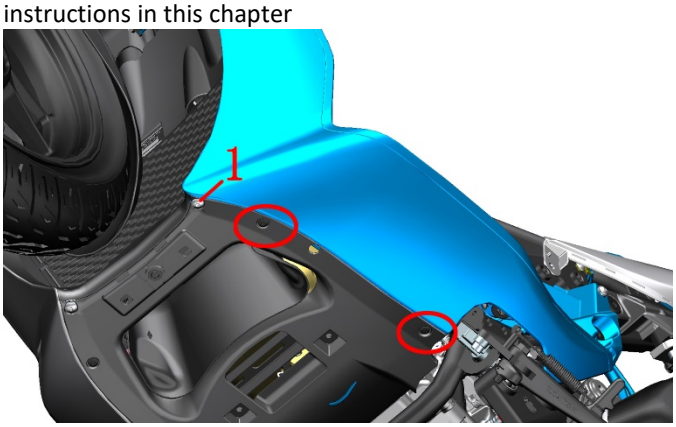

m. Use 4# inner hexagon to remove 3 M6×14 bolts.

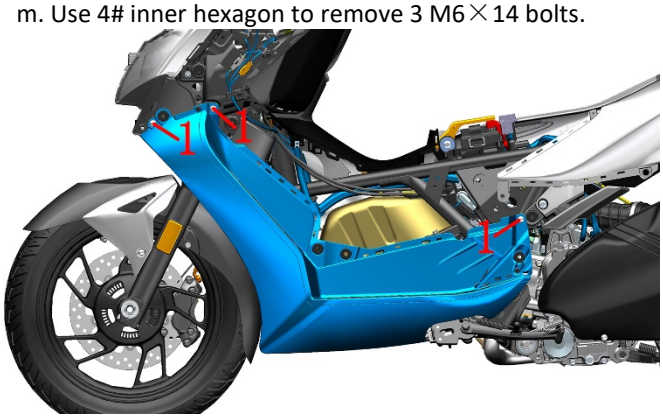

o. Use a dust blow gun to blow away the dust and debris near the spark plug.

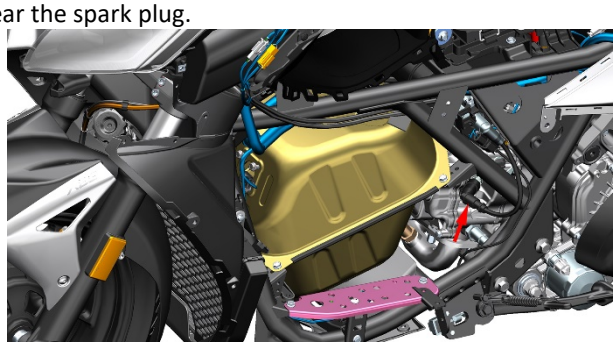

p. Pull out the ignition coil high-voltage cap.

q. Remove the spark plug by turning it counterclockwise with the vehicle-mounted tool or special 14# spark plug sleeve.

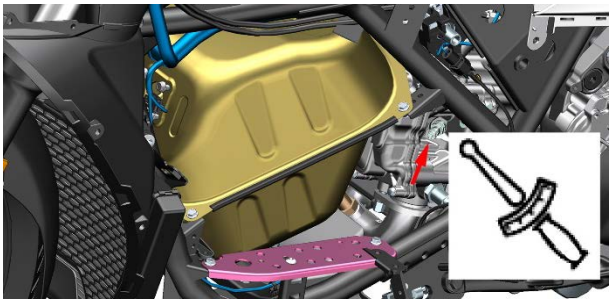

r. It is recommended to seal the spark plug installation hole with masking paper or other soft plastic bags to prevent foreign matter from entering the engine.

D125/D125(2024)/D155

a. Remove the right pedal and right side cover to " D350 disassemble the spark plug ".

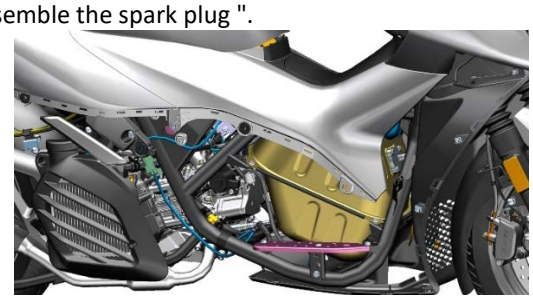

b.Use a dust blow gun to blow away the dust and debris near the spark plug.

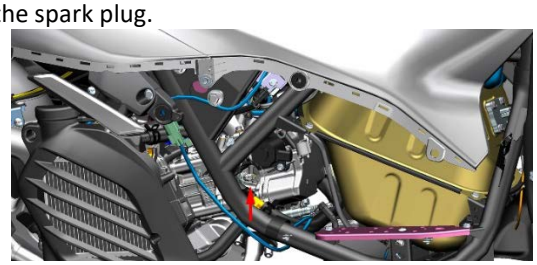

c. Pull out the ignition coil high-voltage cap.

d. Remove the spark plug by turning it counterclockwise with the vehicle-mounted tool or special 14# spark plug sleeve.

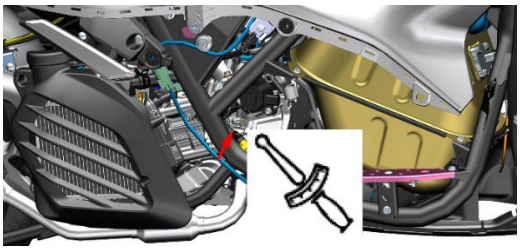

e.It is recommended to seal the spark plug installation hole with masking paper or other soft plastic bags to prevent foreign matter from entering the engine.

2.Check the spark plug

D350/D250/D368

a. Check whether the insulator is cracked or damaged, whether the center electrode is abraded, fouled, corroded, excessively carbonized or discolored (the color of the ceramic insulator around the middle electrode of the spark plug should be light brown). If so, replace the spark plug with a new one.

b. Clean the electrode with a special spark plug cleaner. Use a hard iron wire or steel needle to remove the attached carbon deposits.

c. Use a feeler gauge to inspect the gap between the center electrode and the side electrode.



d. If necessary, the gap can be adjusted by bending the side electrodes, paying attention to the strength during adjustment.

e. Clean the surface of the spark plug gasket and the joint surface, and wipe off the dirt on the thread.

f. First screw it back to the engine by hand, and then use the tool to turn it clockwise to the standard torque.

Model: LMAR8A-9
Resistance between the terminal screw and the center electrode: 3～7.5kΩ
Clearance: 0.8-0.9mm (0.031-0.035in)
Torque: 14N.m (1.4kgf.m, 10 lbf.ft)

D125

a. Check whether the insulator is cracked or damaged, whether the center electrode is abraded, fouled, corroded, excessively carbonized or discolored (the color of the ceramic insulator around the middle electrode of the spark plug should be light brown). If so, replace the spark plug with a new one.

b. Clean the electrode with a special spark plug cleaner. Use a hard iron wire or steel needle to remove the attached carbon deposits.

c. Use a feeler gauge to inspect the gap between the center electrode and the side electrode.



d. If necessary, the gap can be adjusted by bending the side electrodes, paying attention to the strength during adjustment.

e. Clean the surface of the spark plug gasket and the joint surface, and wipe off the dirt on the thread.

f. First screw it back to the engine by hand, and then use the tool to turn it clockwise to the standard torque.

Model: NGK CR8EI-8
Resistance between the terminal screw and the center electrode: 3～7.5kΩ
Clearance: 0.7-0.9mm (0.028-0.035in)
Torque: 14N.m (1.4kgf.m, 10 lbf.ft)

D125(2024)/D155

a. Check whether the insulator is cracked or damaged, whether the center electrode is abraded, fouled, corroded, excessively carbonized or discolored (the color of the ceramic insulator around the middle electrode of the spark plug should be light brown). If so, replace the spark plug with a new one.

b. Clean the electrode with a special spark plug cleaner. Use a hard iron wire or steel needle to remove the attached carbon deposits.

c. Use a feeler gauge to inspect the gap between the center electrode and the side electrode.



d. If necessary, the gap can be adjusted by bending the side electrodes, paying attention to the strength during adjustment.

e. Clean the surface of the spark plug gasket and the joint surface, and wipe off the dirt on the thread.

f. First screw it back to the engine by hand, and then use the tool to turn it clockwise to the standard torque.
Model: CPR8EA－9
Resistance between the terminal screw and the center electrode: 3～7.5kΩ
Clearance: 0.8-0.9mm (0.031-0.035in)
Torque: 14N.m (1.4kgf.m, 10 lbf.ft)

3. Refer to the steps to remove the spark plug to restore all parts.

DANGER

●The vehicle must be parked on a flat and stable ground or a lifting platform.
●The operation can only be performed after the engine has cooled down completely.

WARNING

●Do not pull or knock the center electrode.
●If the replacement of inappropriate heating value or inferior spark plugs causes engine damage, it is not within the scope of the three guarantees.
●When installing the spark plug, the torque should not be too large, and the thread should be screwed in manually before tightening. If there is no torque wrench to replace the spark plug, you can turn it by hand until there is resistance and then rotate it 1/2 turn. For example, if you use an old spark plug, you can turn it to the standard torque as soon as possible.
●Pay attention and order when removing the plastic buckle to avoid the buckle from breaking.

Engine oil

DANGER

●The vehicle must be parked on a flat and stable ground or a lifting platform.
●Once the engine and muffler have cooled down, the operation can be performed.
●When adding engine oil, prevent the engine oil from dripping onto the surface of the muffler.
●The engine oil should be kept away from children and pets. Short-term contact with engine oil may irritate the skin. Please wear long-sleeved clothes or sleeves and anti-shake gloves before changing the oil. If you accidentally get oil, you need to clean it thoroughly with soapy water.
●Replaced waste engine oil must be collected uniformly and handed over to professional organizations for proper disposal. It is forbidden to dump at will, into trash cans or directly onto the ground, etc.

WARNING

●The engine oil and gear box oil should be replaced according to the periodic table specified in the manual.
●It is necessary to purchase regular and qualified engine oil. Inferior engine oil will aggravate engine wear and, in severe cases, will cause engine failure and shorten service life.
●The amount of oil should meet the requirements, too much or too little may cause engine damage.

CAUTION

●The copper gasket and the combination gasket need to be replaced after disassembly; the O-ring and gasket are recommended to be replaced with new ones.
●O-rings need to be assembled in place to avoid trimming.
●After removing the oil dipstick and the filler nut, it is necessary to prevent foreign matter from falling into the engine.

D350/368/368（ETC）

1、Drain engine oil

a. Start the vehicle, let it idle for 3-5 minutes, then turn it off for 3-5 minutes (if the temperature is below 10°C (50°F), extend the idling time appropriately).

b. Use the main stand to stabilize the vehicle.

c. Rotate the engine oil dipstick (1) on the right side of the engine counterclockwise, then remove the dipstick (1) and O-ring (2). You can rest the dipstick on the oil filler opening without removing it to prevent foreign objects from falling into the engine.

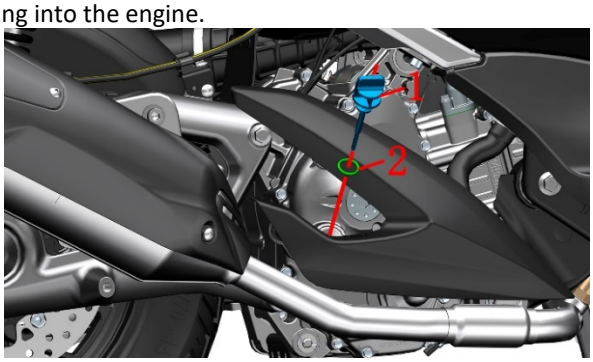

d. Place an oil-catching pan under the drain bolt, then use a #14 socket to remove the M12×1.5×15 drain bolt (3) and the 12×ϕ20×2 combined sealing washer (4).



e. Wipe the mating surface clean with a non-woven cloth. Check the oil drain bolt (3) mating surface for any scratches; if present, replace with a new one, otherwise wipe it clean.

f. Replace with a new combined gasket (4), and reinstall the oil drain bolt (3) and combined gasket (4) onto the engine block using a 14# socket. Torque: 25 N·m (2.6 kgf·m, 18 lbf·ft).

2、Replace the fine filter

a. Place an oil pan under the bottom of the fine filter cover.



b.350D

Use a #10 socket to secure the M6 nut (4), then use a #8 socket to remove the bolt (1), and take off the flanged bushing (2) and the oil filter guard plate (3).

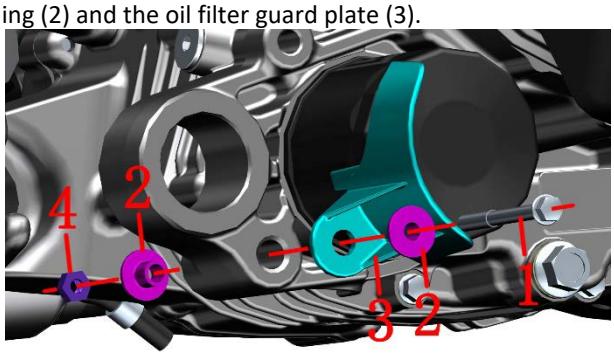

368D

Remove the strap first, then take off the engine filter guard.



368D（ETC）

Remove the engine oil filter guard after taking out the bolts with a T25 Torx wrench.

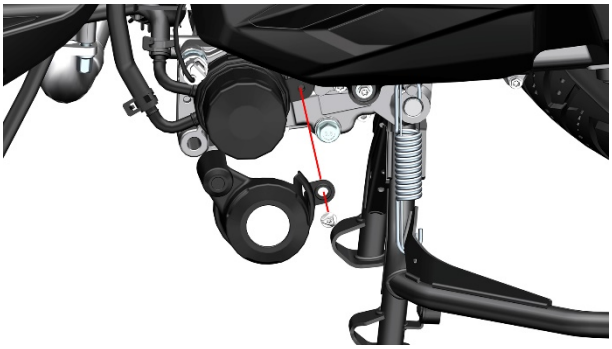

c. Use a 14-sided 65mm cap filter wrench + 1/2" (12.5mm) ratchet wrench to rotate counterclockwise to remove the fine filter. The Skadder model number of the filter wrench is 97401. Replace for the first 1000 km or 3 months (whichever comes first), and every 8000 km or 30 months (whichever comes first).



d. Drain the oil from the fine filter.



e. Wipe off the remaining engine oil and impurities on the engine with a clean non-woven cloth.

f. Apply a layer of engine oil to the new fine filter seal and install it on the engine. Torque: 20 N·m (2 kgf·m, 15 lbf·ft).

Be careful not to omit this sealing ring, and check the surface of the sealing ring for damage, hardening, or other defects before assembly.



3、Add engine oil

a. When replacing the filter, use a measuring cup to add 1.75L (1.85 US qt, 1.54 lmp qt, 0.46 US gal, 0.39 lmp gal) of new motorcycle-specific engine oil with viscosity SAE 5W-40/10W-40/10W-50, API SN grade or higher. If not replacing the filter, use a measuring cup to add 1.55L (1.64 US qt, 1.36 lmp qt, 0.41 US gal, 0.34 lmp gal).

b. After removing the oil dipstick, use a funnel and measuring cup to add engine oil to the oil filler hole on the right crankcase cover of the engine.



c. Wipe the oil filler port clean with a non-woven cloth.



d. Check O-ring (2) for damage or aging. If there is none, clean it; if there is, it needs to be replaced. The O-ring specification for the oil dipstick is: 18×3×3.5.

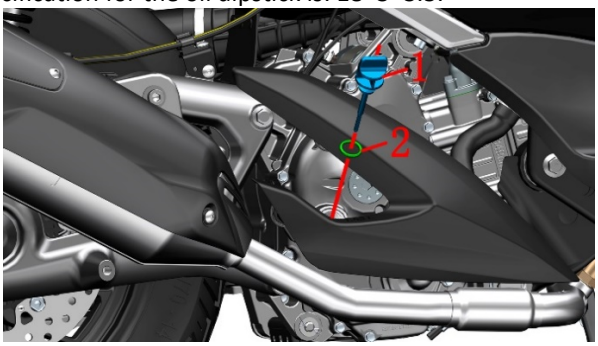

e. Wipe the dipstick clean, then reinstall the dipstick (1) and O-ring (2) into the right crankcase cover of the engine by turning it clockwise by hand.

4、Change the gearbox oil

a. Turn the fuel filler cap (1) counterclockwise to remove the cap (1) and the O-ring (2). The specifications of the O-ring used for the fuel filler cap are: 13.8×2.5. Place the cap (1) on the fuel filler without removing it to prevent foreign objects from falling into the engine.

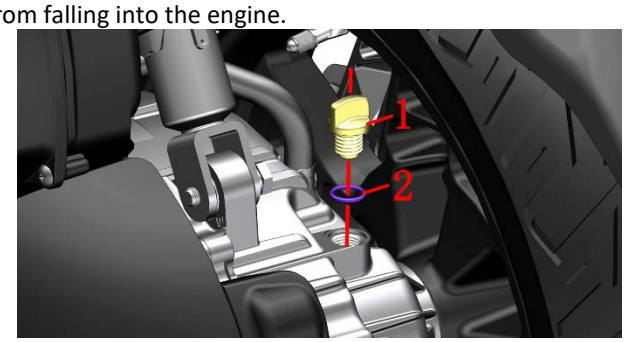

b. Place an oil pan under the rear bottom of the left engine. Use a #14 socket to turn the drain bolt (3) counterclockwise to loosen it.

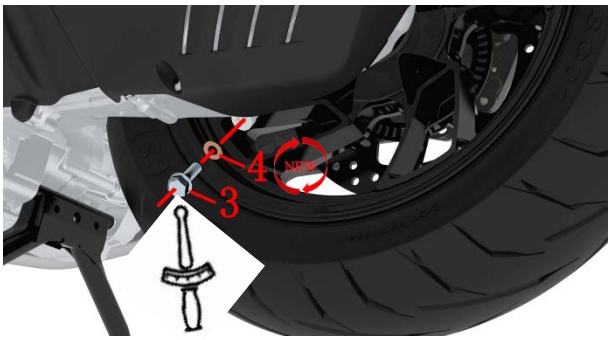

c. The ETC model uses a No. 10 socket, while the early 368 model used a No. 14 socket; the current production uses a No. 10 socket. Other models use a No. 14 socket. Remove the M8×25 drain bolt (3) and the 8.3×16×1.5 copper washer (4).

d. After the gearbox oil is completely drained, wipe the surface of the oil filler port clean with a non-woven cloth.

e. Replace with a new copper gasket (4), check the mating surface of the oil drain bolt (3) for scratches, and if there are none, clean it and reinstall in order. Torque: 20 N·m (2 kgf·m, 15 lbf·ft).

f. Use a measuring cup to pour 0.2 L (0.21 US qt, 0.18 lmp qt, 0.05 US gal, 0.04 lmp gal) of engine oil or gearbox-specific oil.

g. Check O-ring (4) for damage or aging. If there is none, clean it; if there is, it needs to be replaced.

h. Wipe the nut (3) and the oil filler port clean with a non-woven cloth. First, fit the O-ring (4) onto the nut (3), then screw it back into the gearbox oil filler port clockwise by hand.

5、Check the oil level

a. Start the vehicle and let it idle for a few minutes, then check all disassembled areas for any leaks; if found, they need to be addressed.

b. Let the engine idle for 5 minutes, then turn it off for 3 minutes. Check if the engine oil level meets the standard; if it does not, either drain or add oil to reach the standard level.



Maximum oil level (around the 1/4 mark)
Minimum oil level line

D125/D125(2024)/D155

1. Drain the oil

a. Start the vehicle and turn off the engine for 3-5 minutes after idling for 3-5 minutes.

b. Use the main bracket to park the vehicle firmly.

c. Rotate the oil dipstick(1) on the right side of the engine counterclockwise, and remove the oil dipstick(1) and O ring (2) to accelerate the oil flow.

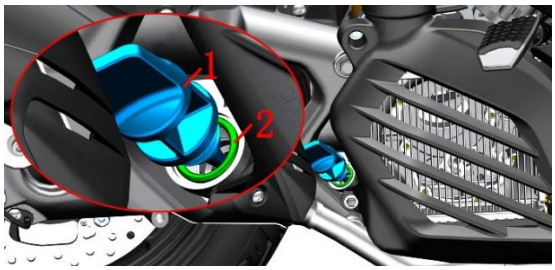

d. After placing an oil pan under the oil drain bolt, use a 14# sleeve to remove the oil drain bolt(3) and the combined seal gasket(4). Use a 24# sleeve to remove the strainer cover (5) at the bottom, take off the 34.5×3.5 acrylate rubber O-ring(6), the ϕ25.8×34.2×1.8 strainer spring(7) and the outer diameter ϕ22×21 cap-shaped strainer(8). Drain the oil from the crankcase.



e. Check whether the strainer (8) is damaged, if it is damaged, replace it, if not, clean it up.

f. Wipe clean the joint surface with a non-woven fabric. Inspect the oil drain bolt(3) whether the joint surface is scratched; if there is any, replace it with a new one, if not, wipe it clean.

g. Replace the new combination gasket(4), and use a 14# sleeve to install the oil drain bolt(3) and combination gasket (4) back to the engine box. Torque: 25N.m (2.6 kgf.m, 18 lbf. ft). Replace the new O-ring (6), put the O-ring (6), spring (7) and cap-type fine filter (8) into the fine filter cover (5) in turn, and then put it back to the bottom of the engine with a 24# sleeve.

2. Replace fine filter

a. Place an oil pan under the fine filter cover.

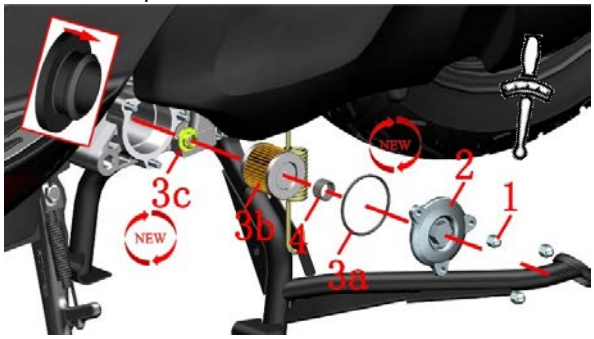

b. Use a 10# sleeve to loosen the 3 nuts(1) at the fine filter cover.

c. Remove the fine filter cover(2) and O ring (3a). Remove the spring(4), the fine filter (oil filter element) (3b) and the gasket (3c) in sequence.

d. Replace the new fine filter (oil filter element) and gasket. The fine filter assembly already contains O ring (3a), fine filter (oil filter element) (3b) and gasket (3c). Replace in order.

e. Remove the O ring on the fine filter cover and replace it with a new O ring. First put the O ring (3a) into the groove of the fine filter cover(2), and then install it back to the engine box.

f. Screw back the 3 nuts (1), Torque: 12 N.m (1.2 kgf.m, 9 lbf.ft).

3. Add oil

a. Replace the filter element with a measuring cup with a viscosity of SAE5W-40/10W-40/10W-50. The new API SN grade or higher motorcycle special machine 0.95L (1 US qt, 0.84 lmp qt, 0.25 US gal, 0.21 lmp gal). If the filter element is not replaced, the measuring cup is filled with 0.9L (0.95 US qt, 0.79 lmp qt, 0.24 US gal, 0.2 lmp gal).

b. Use a funnel + measuring cup to add engine oil to the fuel filler opening on the right crankcase cover of the engine.

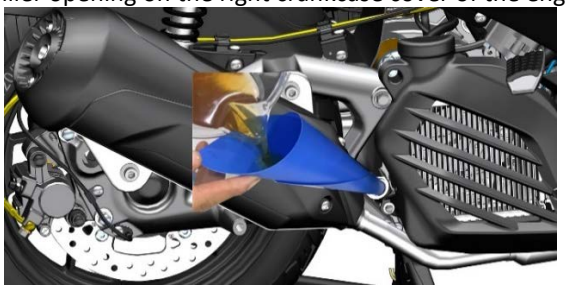

c. Wipe clean the fuel filler opening with a non-woven cloth.



d.inspection O ring(2)Whether there is damage or aging, if not, wipe it clean, if any, replace it.

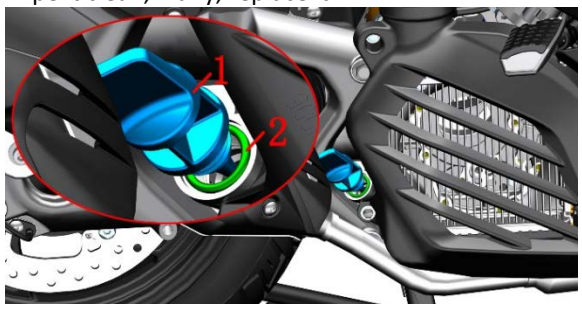

e. Wipe clean the oil dipstick, and turn the oil dipstick(1) and O-ring(2) clockwise by hand to replace the right crankcase cover of the engine.

4. Change gear box oil

a. Remove the left engine cover by referring to the steps for replacing the air inlet filter element.

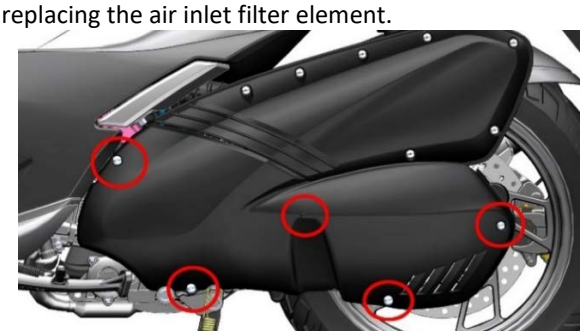

D125

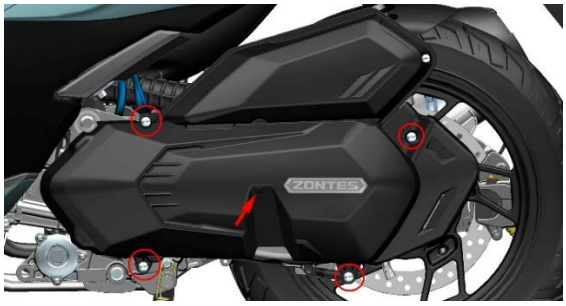

D125 (2024)

b. Place an oil pan under the rear of the left engine. Rotate the fuel filler nut(1) counterclockwise, and remove the nut(1) and O ring(2).

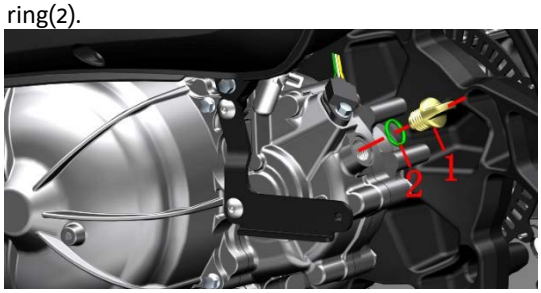

c. Use a 14# sleeve to loosen the oil drain bolt(3) counterclockwise, and remove the bolt(3) and copper pad(4).

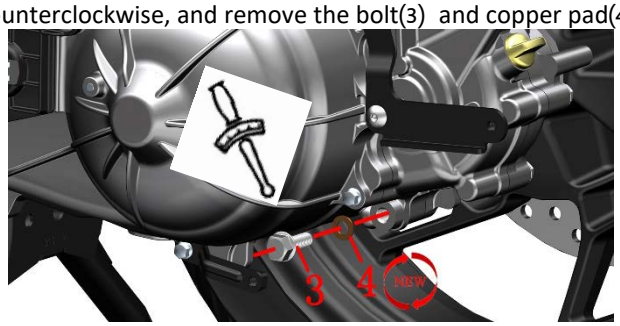

d. Remove the oil drain bolt(3) and the copper pad(4).

e. After the gear box oil is completely drained, wipe the surface of the drain port with a non-woven cloth.

f. Replace with a new copper pad(4), check whether the joint surface of the oil drain bolt(3) is scratched, if not, wipe it clean and install it in order. Torque: 20 N.m (2 kgf.m, 15 lbf.ft).

g. Fill the measuring cup with 0.16L of oil or gearbox special oil (0.17US qt, 0.14 lmp qt, 0.04 US gal, 0.04 lmp gal).

h. Check whether the O ring(2) is damaged or aging, wipe it clean if not, and replace it if there is any.

i. Wipe clean the nut(1) and the fuel filler port with a non-woven cloth, first put the O ring(2) into the nut(1), and then turn it clockwise by hand and install it back to the fuel filler port of the gear box.

5. Confirm the oil level

a. After starting the vehicle and running at idle speed for several minutes, check whether all the disassembled positions are leaking, and if there is any leakage, it needs to be checked.

b. After the engine has been idling for 5 minutes and then turned off for 3 minutes, check whether the oil level meets the standard. If it does not meet the standard, draw it out or add it to the standard.



D250

1. Drain the oil

a. Start the vehicle and turn off the engine for 3-5 minutes after idling for 3-5 minutes.

b. Use the main bracket to park the vehicle firmly.

c. Rotate the oil dipstick(1) on the right side of the engine counterclockwise, and remove the oil dipstick(1) and O ring (2) to accelerate the oil flow.

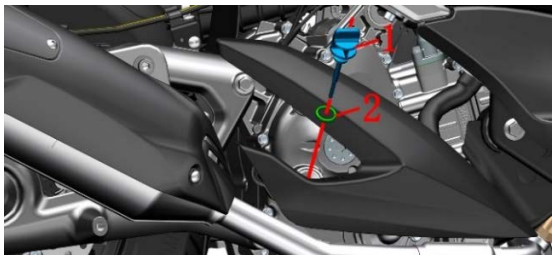

d. After placing an oil pan under the oil drain bolt, use a 14# sleeve to remove the oil drain bolt(3) and the combined seal gasket(4).

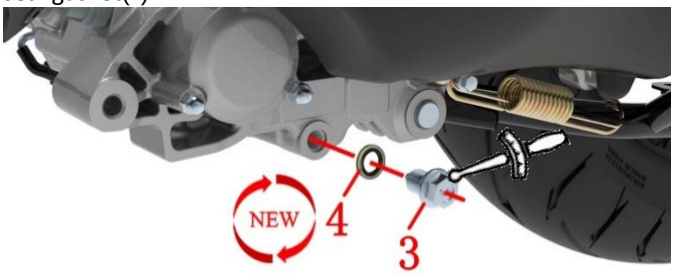

e. Wipe clean the joint surface with a non-woven fabric. Inspect the oil drain bolt(3) whether the joint surface is scratched; if there is any, replace it with a new one, if not, wipe it clean.

f. Replace the new combination gasket(4), and use a 14# sleeve to install the oil drain bolt(3) and combination gasket (4) back to the engine box. Torque: 25N.m (2.6 kgf.m, 18 lbf.ft).

2. Replace fine filter

a. Place an oil pan under the fine filter cover.

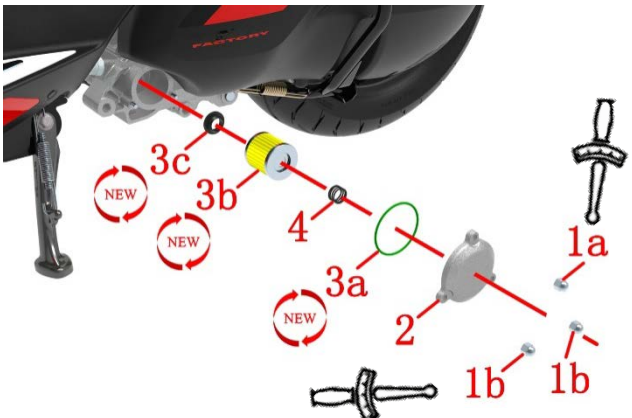

b. Use a 10# sleeve to loosen the 2 nuts (1b) at the bottom of the fine filter cover; use a 10# torx wrench to remove the upper nut (1c). Then remove the nut (1b) at the bottom.

c. Remove the fine filter cover(2) and O ring (3a). Remove the spring(4), the fine filter (oil filter element) (3b) and the gasket (3c) in sequence.

d. Replace the new fine filter (oil filter element) and gasket. The fine filter assembly already contains O ring (3a), fine filter (oil filter element) (3b) and gasket (3c). Replace in order.

e. Remove the O ring on the fine filter cover and replace it with a new O ring. First put the O ring (3a) into the groove of the fine filter cover(2), and then install it back to the engine box.

f. Screw back the 3 nuts (1), first pre-tighten the bottom 2 with a 10# sleeve, and tighten the upper nut (1a) with a 10# torx wrench; then tighten the bottom 2 screws. Torque: 12 N.m (1.2 kgf.m, 9 lbf.ft).

3. Add oil

a. Replace the filter element with a measuring cup with a viscosity of SAE5W-40/10W-40/10W-50. The new API SN grade or higher motorcycle special machine 1.75L (1.85US qt, 1.54 lmp qt, 0.46 US gal, 0.39 lmp gal). If the filter element is not replaced, the measuring cup is filled with 1.7L (1.8US qt, 1.49 lmp qt, 0.45 US gal, 0.37 lmp gal).

b. Use a funnel + measuring cup to add engine oil to the fuel filler opening on the right crankcase cover of the engine.



c. Wipe clean the fuel filler opening with a non-woven cloth.



d.inspection O ring(2)Whether there is damage or aging, if not, wipe it clean, if any, replace it.

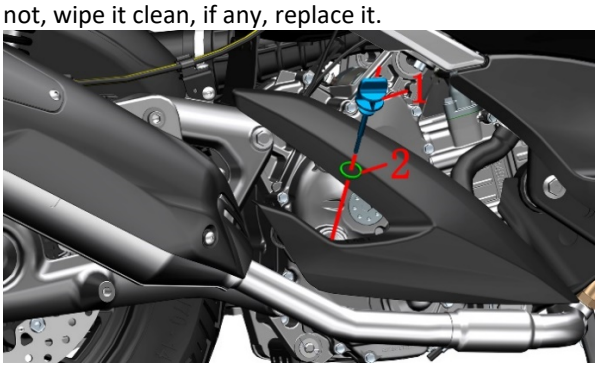

e. Wipe clean the oil dipstick, and turn the oil dipstick(1) and O-ring(2) clockwise by hand to replace the right crankcase cover of the engine.

4. Change gear box oil

a. Place an oil pan under the rear of the left engine. Rotate the fuel filler nut(1) counterclockwise, and remove the nut(1) and O ring(2).

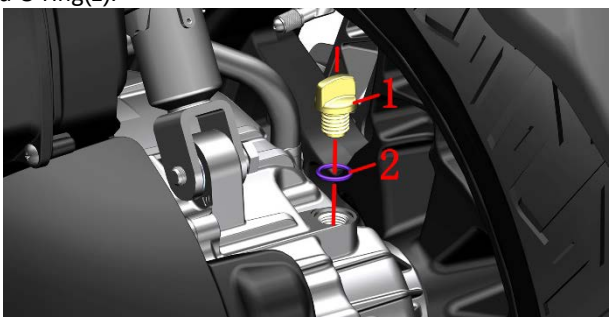

b. Use a 14# sleeve to loosen the oil drain bolt(3) counterclockwise, and remove the bolt(3) and copper pad(4).

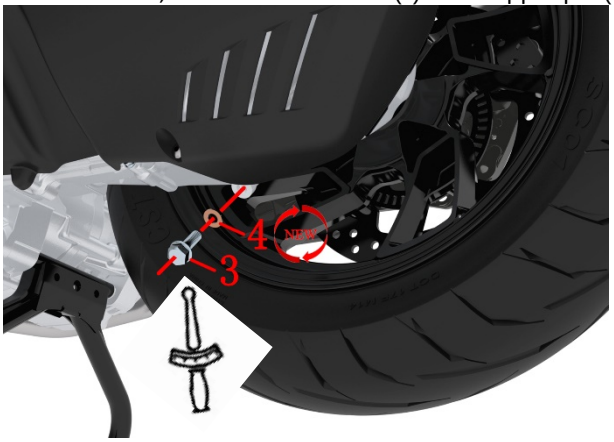

c. Remove the oil drain bolt(3) and the copper pad(4).

d. After the gear box oil is completely drained, wipe the surface of the drain port with a non-woven cloth.

e. Replace with a new copper pad(4), check whether the joint surface of the oil drain bolt(3) is scratched, if not, wipe

it clean and install it in order. Torque: 20 N.m (2 kgf.m, 15 lbf.ft).

f. Fill the measuring cup with 0.2L of oil or gearbox special oil (0.21US qt, 0.18 lmp qt, 0.05 US gal, 0.04 lmp gal).

g. Check whether the O ring(2) is damaged or aging, wipe it clean if not, and replace it if there is any.

h. Wipe clean the nut(1) and the fuel filler port with a non-woven cloth, first put the O ring(2) into the nut(1), and then turn it clockwise by hand and install it back to the fuel filler port of the gear box.

5. Confirm the oil level

a. After starting the vehicle and running at idle speed for several minutes, check whether all the disassembled positions are leaking, and if there is any leakage, it needs to be checked.

b. After the engine has been idling for 5 minutes and then turned off for 3 minutes, check whether the oil level meets the standard. If it does not meet the standard, draw it out or add it to the standard.



D368/350/250 Throttle valve body

Caution:

●The three-in-one sensor and stepper motor cannot be immersed in any liquid.

●It is forbidden to adjust the idle speed adjustment screw on the valve body.

1. Do not dismantle the throttle body to clean up carbon deposits

a. In the process of riding, without affecting safety and complying with traffic laws, appropriately increase the throttle to increase the speed to more than 7000 and continue riding for no less than 2 minutes. High-speed scavenging can effectively remove carbon deposits.

b. Use a regular and qualified fuel cleaner to add in the amount indicated. Frequent use may cause damage to the oil supply line.

2. Remove the stepper motor and clean up carbon deposits

a. After opening the seat cushion, use 10# sleeve + ratchet wrench to remove 3 nuts(1). Remove the seat cushion and put it away. Be careful not to put it directly on the ground and avoid scratching the cushion skin.



b. Straighten out the cables in the battery compartment.

Buckle the 2 decorative bolt buckles (3) first. Remove the 4 M6×16 bolts (2) of the rear compartment with 4# Allen. Press the center cylindrical pin of the 2 expansion nails with 4# Allen and remove the expansion nails.

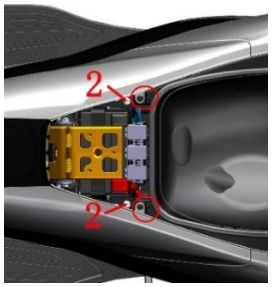



c. Grasp the tail skirt of the storage box and pull it upward obliquely, paying attention to the cables in the battery compartment. Pull up to see the left side of the glove box atmosphere lamp thread, unplug the thread and remove the glove box assembly.



d. Unplug the plug of the stepping motor① and the sensor②

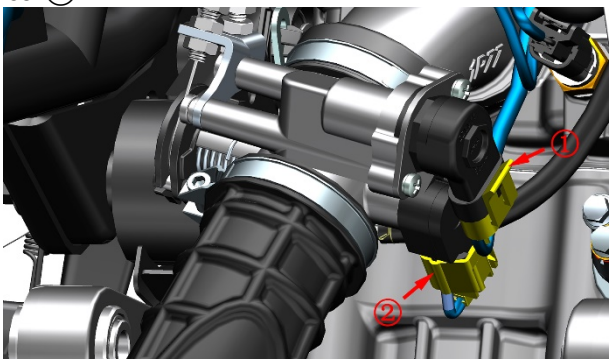

e. Use a short Phillips screwdriver to remove the 2 bolts③ and the anti-off card④ that come with the throttle valve body assembly, and then remove the stepping motor(4).

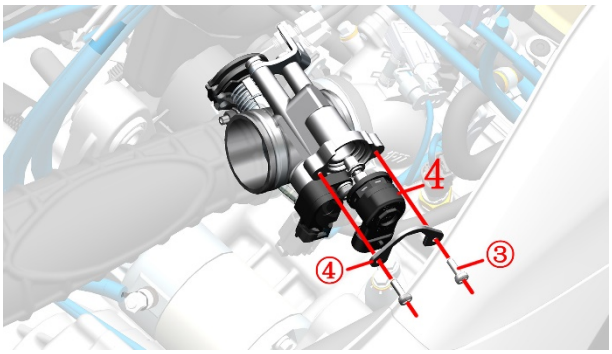

f. Use throttle cleaner to clean the carbon deposits on the head of the stepper motor. Spray a small amount of cleaning agent into the valve body hole. It is forbidden to soak the stepper motor with any liquid.



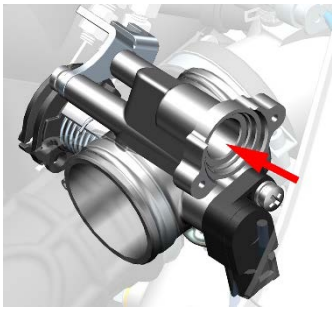

g. Install the stepper motor back to the valve body, paying attention not to miss the sealing ring. Plug the plug back in.

3. Remove the throttle valve body assembly to clean up carbon deposits

a. Unplug the plugs of the stepping motor① and the sensor②.

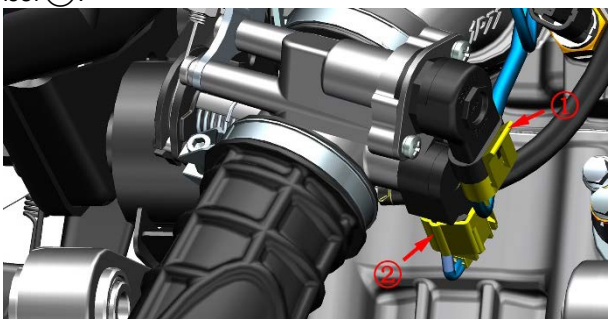

b. Place the small container under the high-pressure oil pipe, press the buckle indicated by③ and pull out the high-pressure oil pipe(1) in the direction of the arrow at the same time. A small amount of fuel will flow out when it is pulled out, and it is forbidden to drip onto the surface of the part.



c. Find the circlip at the bottom of the valve body (2) pinch both ends of the circlip with your hands and move it out, and then pull out the desorption tube (3).

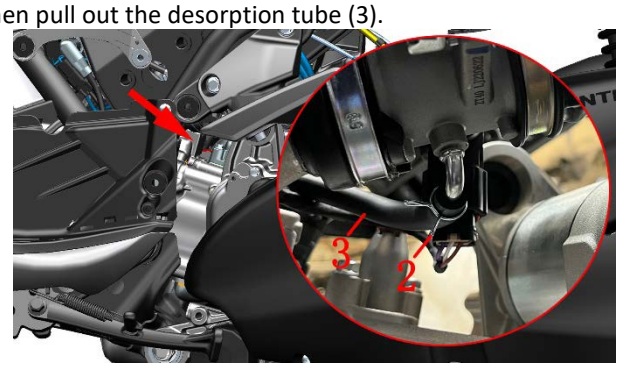

d. Loosen the bolt of the clamp(4) with a 4# inner hexagon and pull out the air filter outlet pipe(5) and clamp(4) in the direction of the arrow to pull out the throttle valve body.

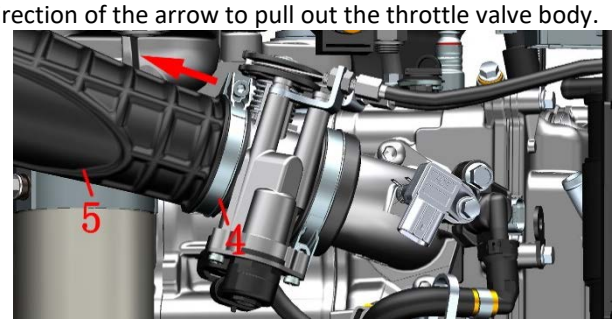

e. Use 5# inner hexagon to remove 2 bolts(6) and then remove the valve body assembly from the engine.

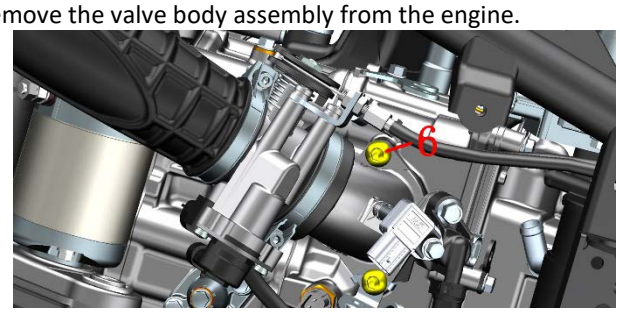

f. Remove the heat insulation pad and O-ring assembly, and remove the O-ring(10). Use a 4# inner hexagon to loosen the clamp(9) and separate the intake manifold from the valve body assembly. Use 2 10# open-end wrenches to loosen the two nuts of the fuel line(8) and then pull them out to remove them from the bracket; take out the cylinder end of the throttle line from the turntable. After the two nuts of the oil return line(7) are loosened, completely loosen the nut at the bottom of the threaded sleeve, and then pull out the bracket in the direction of the axis.

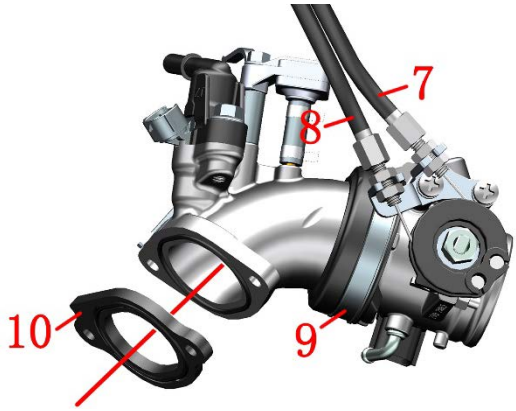

g. Use throttle valve body cleaning agent to clean the carbon deposits on the intake manifold and throttle valve body outlet respectively. It is forbidden to directly soak the throttle valve body assembly and intake manifold assembly with any liquid.

h. After cleaning the heat insulation pad, replace 2 new O-rings⑩ and assemble them in place. Wipe clean the contact surface of the intake manifold and the heat insulation pad and the end surface of the heat insulation pad and the engine. Reversely reset all materials in the order of disassembly.

4. Disassemble the sensor

a. If the idling speed is abnormal, it is easy to extinguish and the spark plug and high voltage coil are eliminated, the sensor needs to be removed for investigation. It should not be disassembled under normal circumstances.

b. Refer to the steps for removing carbon deposits without disassembling the throttle valve body, and unplug the plugs of the stepping motor① and the sensor②. Remove the stepper motor. After turning off the power, take out the stepping motor, do not loosen the cable plug, press the flameout switch at startup without ignition, check whether the motor plug can shrink back and forth, and finally turn off the flameout switch to check whether the plug returns to its original position.

If you need to check whether the stepper motor is abnormal, measure whether the resistance across A and B is 53±5.3Ω. Bolts for fixing stepper motors: GB9074.4 M4×12.

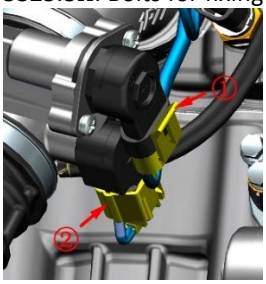

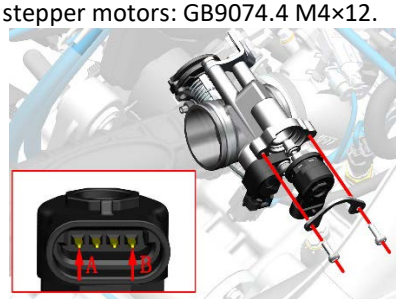

c. Use a short Phillips screwdriver to remove the 2 GB9074.4 M5×16 bolts③ that comes with the throttle valve body assembly, and then remove the the anti-off card④, and then take off the stepper motor.It is forbidden to soak the sensor with any liquid.

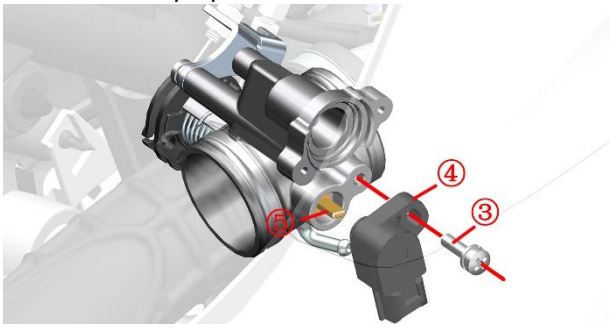

Simple test method: connect the whole vehicle to the diagnostic instrument, press the flameout switch (no need to ignite), turn the throttle handlebar from the initial position to full open, this process to see if the throttle position signal follows the change from 0 to 100.

Position sensor output voltage value idle position: 0.7±0.1V; Full open position: 3.6-3.9V, input voltage DC5V±0.1V. f. Check the external inlet pressure sensor:

Release the connector and see if the pins are skewed or broken.

d. The vehicle is connected to a diagnostic instrument without ignition, and the engine parameters are checked to see if the pressure parameters are consistent with the local atmospheric pressure.

If you need to remove the intake pressure sensor, grasp the bushing (2) firmly and remove the bolt (1) with the 8# short sleeve. If it is inconvenient to operate, the battery and electrical device box can be removed before proceeding. Clamp the clamp on the bottom with pliers and move it up to the top and remove the inlet pressure sensor from the hose (3) and the sensor. Remove the hose from the sensor.

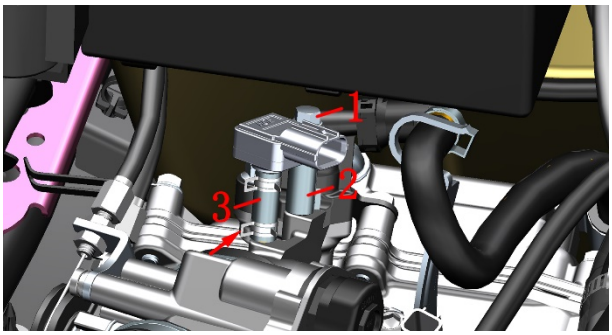

5. Throttle valve body troubleshooting process

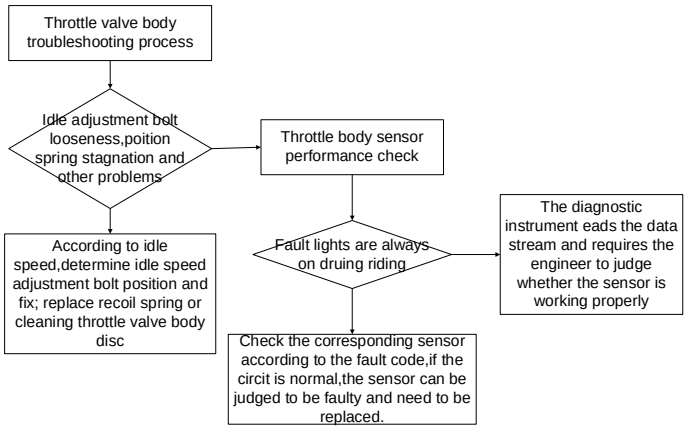

DANGER

●The vehicle must be parked on a flat and stable ground or a lifting platform.
●Once the engine and muffler have cooled down, the operation can be performed.
●When removing the high-pressure fuel pipe, prevent the fuel from dripping onto the surface of the part.
●Smoking, making calls, etc. are prohibited in the workplace.

CAUTION

●Remove the throttle valve body to clean the carbon deposits and operate in a dust-free and dust-free environment to prevent dust from entering the inside of the engine.
●Prevent foreign matter from falling into the engine or air filter.

●If the stepper motor,sensor and heat insulation pad are disassembled, do not miss the sealing ring and make sure that the sealing ring is assembled in place without cutting edges.
●Do not use carburetor cleaner or compressed air to clean the throttle valve body.
●The EFI system needs to be reset after reinstalling the battery.The specific method is as follows:
a. Unlock the vehicle and support the main bracket;
b. Pinch the brake and start the vehicle;
c. Pull the engine speed above 3000 rpm;
d. After releasing the throttle, turn off the flameout switch and lock the car;
e. After waiting for 5 seconds, unlock the vehicle again to complete the reset of the EFI system.

D125/D125(2024)/D155 Throttle valve body

Caution:
●The position sensor and stepper motor cannot be immersed in any liquid.
●It is forbidden to adjust the idle speed adjustment screw on the valve body.

1. Do not dismantle the throttle body to clean up carbon deposits

a. In the process of riding, without affecting safety and complying with traffic laws, appropriately increase the throttle to increase the speed to more than 7000 and continue riding for no less than 2 minutes. High-speed scavenging can effectively remove carbon deposits.
b. Use a regular and qualified fuel cleaner to add in the amount indicated. Frequent use may cause damage to the oil supply line.

2. Remove the stepper motor and clean up carbon deposits

a. After opening the seat cushion, use 10# sleeve + ratchet wrench to remove 3 nuts(1). Remove the seat cushion and put it away. Be careful not to put it directly on the ground and avoid scratching the cushion skin.



b. Straighten out the cables in the battery compartment.
Buckle the 2 decorative bolt buckles (3) first. Remove the 4 M6×16 bolts (2) of the rear compartment with 4# Allen. Press the center cylindrical pin of the 2 expansion nails with 4# Allen and remove the expansion nails.

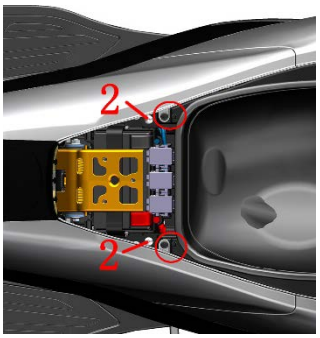



c. Grasp the tail skirt of the storage box and pull it upward obliquely, paying attention to the cables in the battery compartment. Pull up to see the left side of the glove box atmosphere lamp thread, unplug the thread and remove the glove box assembly.



d. Use 4# inner hexagon to loosen 2 pcs bolts come with the pipe clamp.



e.Rotate the throttle body so the stepper motor plug is facing up.Unplug the plug of the stepping motor①.

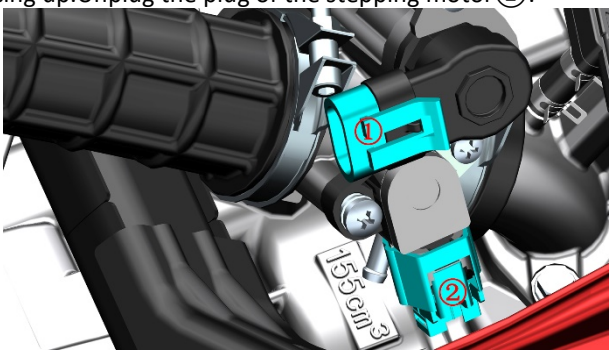

f. Use a short Phillips screwdriver to remove the 2 GB9074.4 M4×12bolts③ and the anti-off card④ that come with the throttle valve body assembly, and then remove the stepping motor.

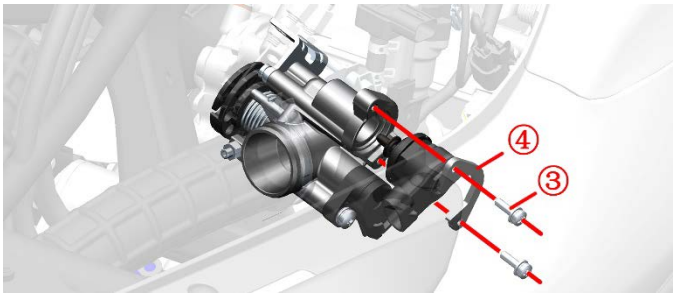

g. Use throttle cleaner to clean the carbon deposits on the head of the stepper motor. Spray a small amount of cleaning agent into the valve body hole. It is forbidden to soak the stepper motor with any liquid.

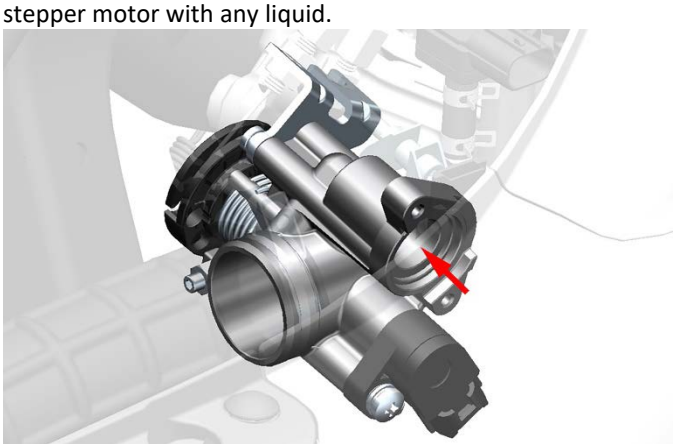

h. Install the stepper motor back to the valve body, paying attention not to miss the sealing ring. Plug the plug back in.

3. Remove the throttle valve body assembly to clean up carbon deposits

a. Refer to the previous steps to loosen the bolts that come with the clamp, then rotate the throttle valve body assembly so that the stepping motor plug faces upwards. Unplug the stepping motor and throttle position sensor plugs.



b. After unplugging the desorption pipe at the bottom, pull out the air filter outlet pipe and then remove the throttle valve body assembly.

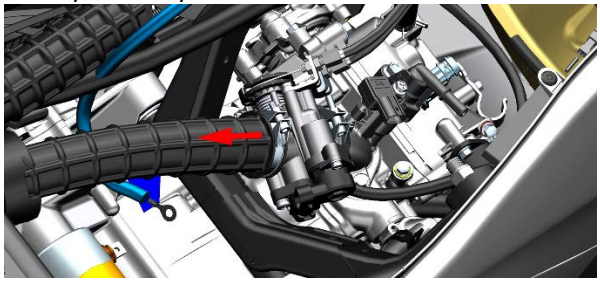

c. After cleaning the carbon deposits, put it back.

4. Disassemble the sensor

a. If the idling speed is abnormal, it is easy to extinguish and the spark plug and high voltage coil are eliminated, the ensor needs to be removed for investigation. It should not be disassembled under normal circumstances.

b. Refer to the steps for removing carbon deposits without disassembling the throttle valve body, and unplug the plugs of the stepping motor① and the sensor②.

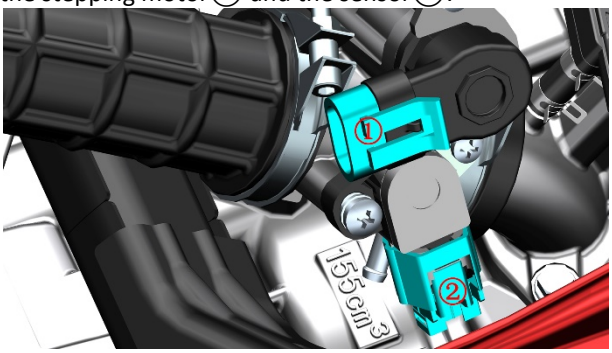

c. Use a short Phillips screwdriver to remove the 2 bolts③ that comes with the throttle valve body assembly, and then remove the three-in-one sensor④.It is forbidden to soak the sensor with any liquid.

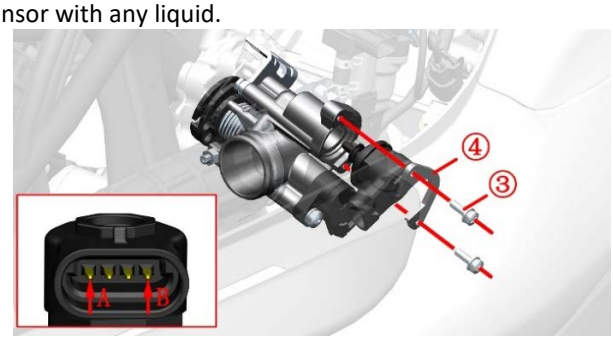

Simple test method:

After turning off the power, take out the stepping motor, do not loosen the cable plug, press the flameout switch at startup without ignition, check whether the motor plug can shrink back and forth, and finally turn off the flameout switch to check whether the plug returns to its original position.

To check whether the stepper motor is abnormal, measure whether the resistance at both ends of A and B is 53±5.3Ω.

d. Use a short Phillips screwdriver to remove the GB9074.4 M5×16 bolts ⑤ that come with the throttle valve body assembly, and remove the position sensor. Be careful to align the hinges ⑥ when you put them back together.

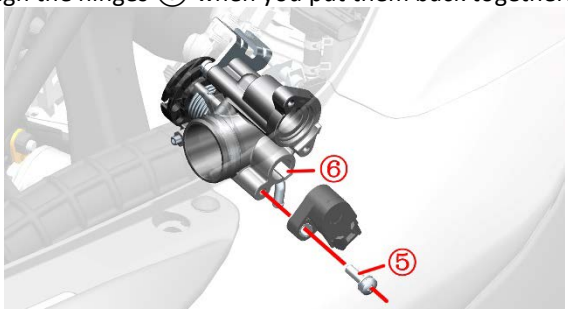

Connect the diagnostic instrument to the whole vehicle, press the flameout switch (without ignition), turn the throttle handle from the initial position to fully open, and check whether the throttle position signal changes from 0 to 100.

e. Check whether the external intake pressure sensor is damaged



Loosen the connector⑦ and check whether the pin is skewed or broken. The vehicle is connected to the diagnostic instrument without ignition. Check the engine parameters to see whether the pressure parameters are consistent with the local atmospheric pressure.

If you need to remove the intake pressure sensor, use an 8# short sleeve to remove the bolt (1). Use pliers to clamp the clamp at the bottom, move it up to the top, and then remove the intake pressure sensor connecting hose (2) and the sensor together. Then remove the hose from the sensor.

5. Throttle valve body troubleshooting process

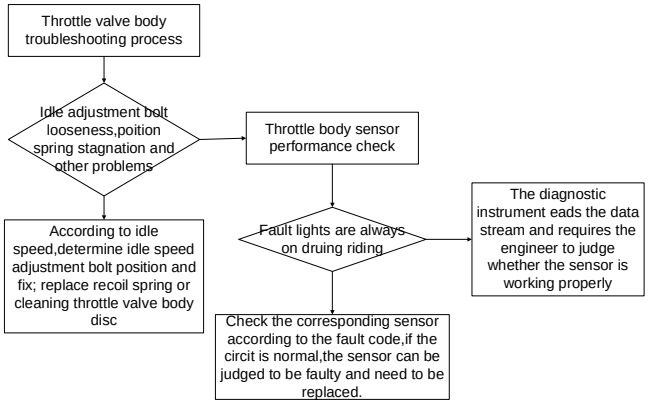

DANGER

●The vehicle must be parked on a flat and stable ground or a lifting platform.
●Once the engine and muffler have cooled down, the operation can be performed.
●When removing the high-pressure fuel pipe, prevent the fuel from dripping onto the surface of the part.
●Smoking, making calls, etc. are prohibited in the workplace.

CAUTION

●Remove the throttle valve body to clean the carbon deposits and operate in a dust-free and dust-free environment to prevent dust from entering the inside of the engine.
●Prevent foreign matter from falling into the engine or air filter.
●If the stepper motor, sensor and heat insulation pad are disassembled, do not miss the sealing ring and make sure that the sealing ring is assembled in place without cutting edges.
●Do not use carburetor cleaner or compressed air to clean the throttle valve body.
●The EFI system needs to be reset after reinstalling the battery.The specific method is as follows:

a. Unlock the vehicle and support the main bracket;
b. Pinch the brake and start the vehicle;
c. Pull the engine speed above 3000 rpm;
d. After releasing the throttle, turn off the flameout switch and lock the car;
e. After waiting for 5 seconds, unlock the vehicle again to complete the reset of the EFI system.

Throttle cable

1. Inspection

a. Check whether the rubber sleeve of the right hand handle and the throttle cable are damaged.
b. Check whether the rubber sleeve of the right hand rotates smoothly and whether it can return automatically.
c. Hold the steering wheel with both hands and turn the right hand to the right while rotating the rubber sleeve of the right handle. Every time you turn a certain steering angle, confirm whether the throttle can be reset normally. If you can't reset it, you need to lubricate the cable or the inside of the right handle; or replace it with a new throttle cable or the rubber sleeve of the right handle.

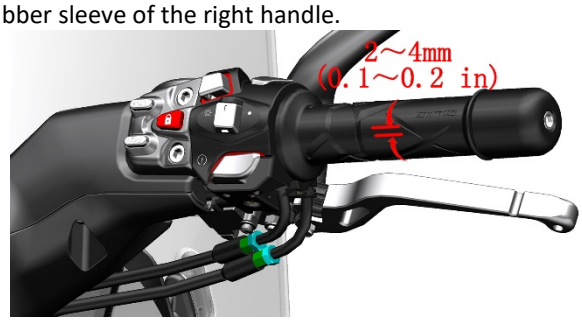

d. After starting the engine, turn the steering handle left and right to ensure that the idling speed does not change during the steering process, and then turn off the engine.
e. Rotate the right hand to check whether the rubber sleeve inspection cable gap is within 2～4mm (0.1～0.2 in).

368D（ETC）

a. Check if the rubber sleeve on the right handlebar is damaged.
b. Check whether the rubber sleeve on the right handlebar rotates smoothly and can return to its original position automatically.
c. Turn the right handdlebar to check the free angle of the sleeve ±0.5°.

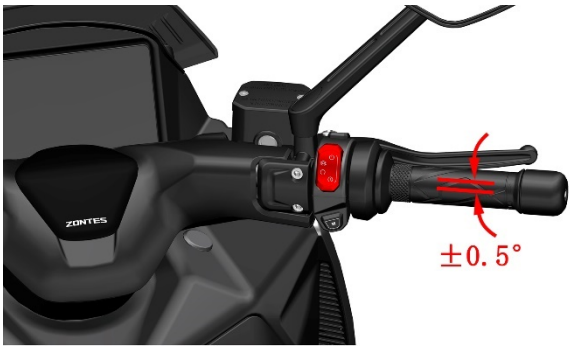

2. Adjust the throttle cable clearance

a. Fix the adjusting screw② with a 8# open-end wrench, and then use a 10# open-end wrench to loosen the nut① counterclockwise. Rotate the adjustment solenoid② clockwise to reduce the free stroke, counterclockwise to expand; adjust the gap to the specified value. After adjusting the gap, tighten the nut①.

Torque: 3.8 N.m (0.4 kgf.m, 2.8 lbf.ft).

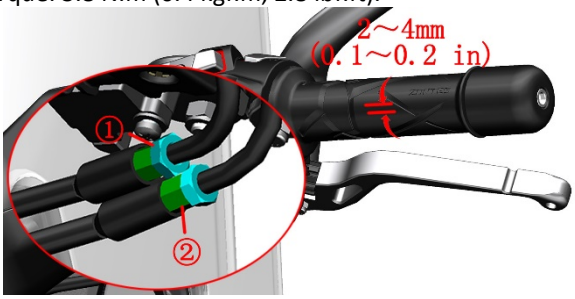

b. If the above adjustment fails to achieve the desired effect, please refer to the description in "Remove the throttle valve body assembly to clean up carbon deposits" to remove the throttle valve body assembly. Use a 10# open-end wrench to loosen the 2 nuts on the bracket to adjust. Torque: 3.0 N.m (0.3 kgf.m, 2.2 lbf.ft).

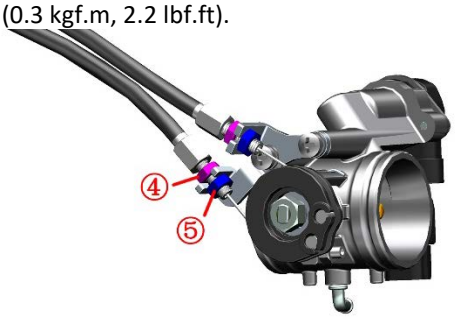

c. If the above two adjustments are invalid, replace the throttle cable with a new one.

3. Lube door cable

If the rotation resistance is large and the bending of the throttle cable and the loose strands of the wire core can be eliminated, add a proper amount of lubricating oil, such as sewing machine oil.

a. Remove 2 bolts(1) with a 5# inner hexagon, and move the upper part of the switch away.



b. Use a syringe to draw a small amount of sewing machine oil several times and inject it from the gap between the throttle cap and the thread core, and turn the throttle while injecting.

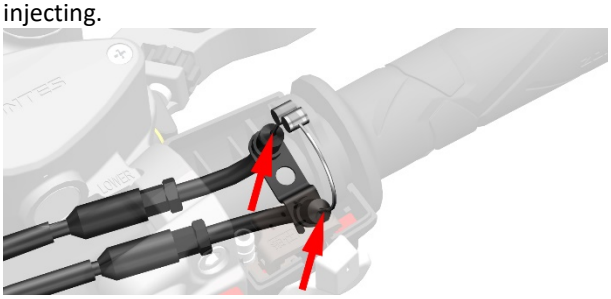

c. If the problem with high resistance cannot be solved after lubrication, the throttle cable needs to be replaced.

⚠WARNING

●After adjusting the gap of the throttle cable, make sure that the throttle handle can be automatically turned back to the closed position. Do not adjust the cable to increase the engine idling speed.
●After the adjustment, the engine idling speed cannot increase when turning the front of the car.
●Do not use high-viscosity oil to lubricate the cable to prevent excessive viscosity from affecting the free movement of the cable.

4.368D（ETC）

Vehicles with electronic throttle do not require adjustment of the free play angle or lubrication.

Idle speed

Caution:
●Before checking the idle speed, you should check other engine maintenance items and the condition is normal before proceeding.
●Check the following items before checking the idle speed:
The maintenance indicator light "🔧" should not light up.
The status of the spark plug has been checked.
The air filter element and the air inlet element have been inspected or replaced.
Check the throttle clearance.
●The limit screw on the valve body is not allowed to be adjusted privately.

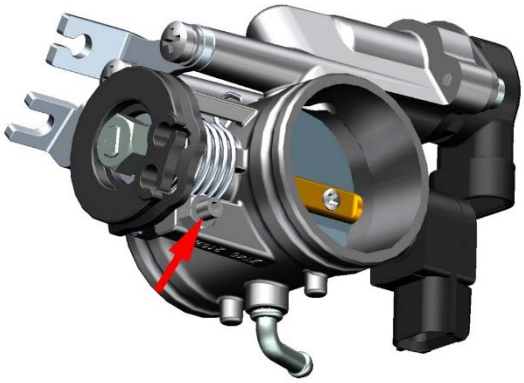

Check idle speed:

Check the idling speed of the engine when the engine is warm.
D350/D250 the idle speed range of the engine should be 1500-1700 rpm.
D125 the idle speed range of the engine should be 1400-1600 rpm.

If the idling speed is not within the standard range or the idling speed is stalled, it should be checked and handled by professional service personnel at the designated maintenance point of Shengshi or a qualified maintenance organization. Abnormal idling or flameout should be checked or repaired according to the troubleshooting procedure in the chapter "Electronic Injection System" of this manual.

Fuel evaporative pollutant control system

D368 (ETC) Fuel evaporation

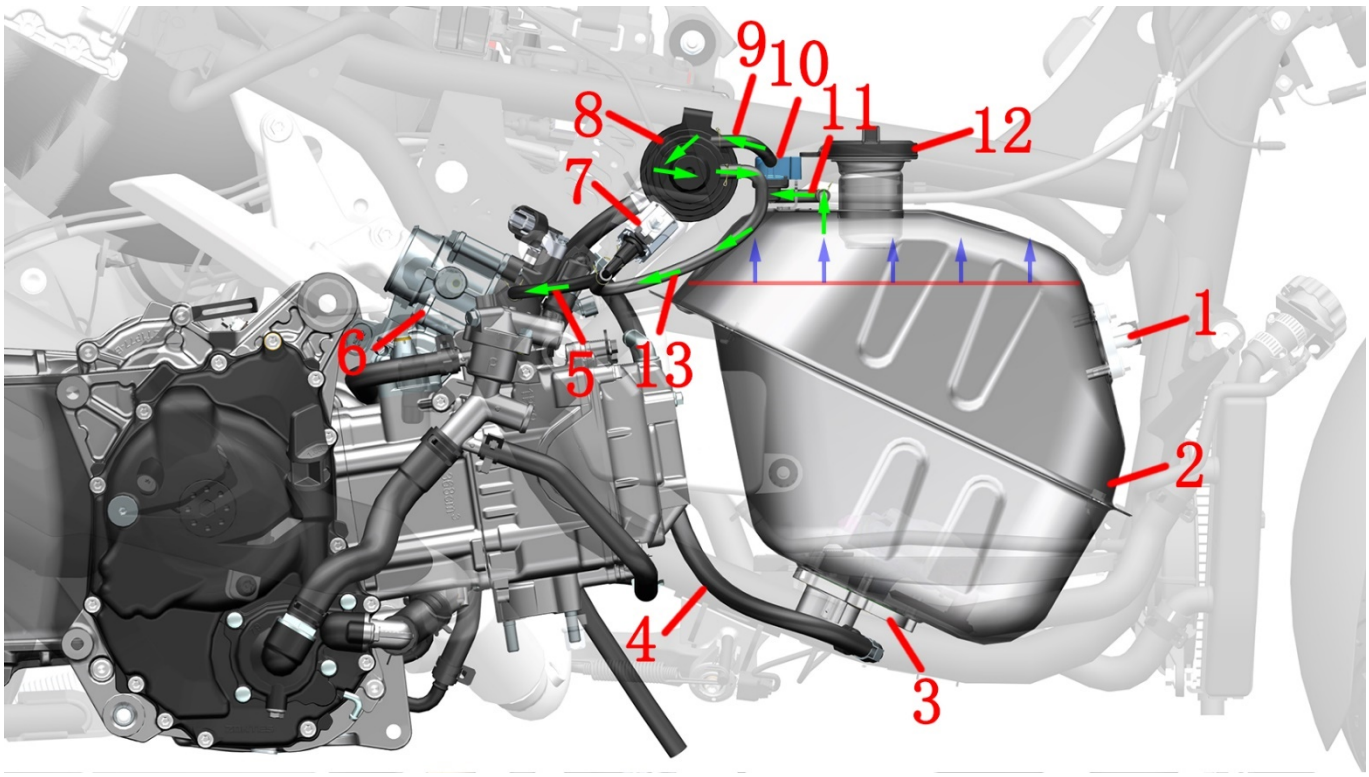

1- Oil level sensor 2- Fuel tank 3- Fuel pump 4- High-pressure fuel pipe 5- Solenoid valve exhaust pipe 6- Throttle body assembly 7- Canister solenoid valve 8- Canister 9- Canister intake pipe 10- External oil-gas separator 11- Fuel tank vent pipe 12- Fuel tank cap 13- Solenoid valve intake pipe

Fuel Evaporation:

Oil and gas → fuel tank vent pipe → external oil-gas separator → charcoal canister intake pipe → charcoal canister → solenoid valve intake pipe → solenoid valve outlet pipe → throttle body assembly → intake manifold → cylinder

The fuel vapor emission control system can only be inspected after the covers are removed.

Check the charcoal canister for cracks or damage.

Check the ventilation pipe for cracks or damage.

Check whether the charcoal canister solenoid valve is working properly.

Check whether the inlet and outlet pipes of the solenoid valve have any cracks or damage.

Check whether any of the hoses are bent, causing airflow obstruction.

D368 fuel evaporation

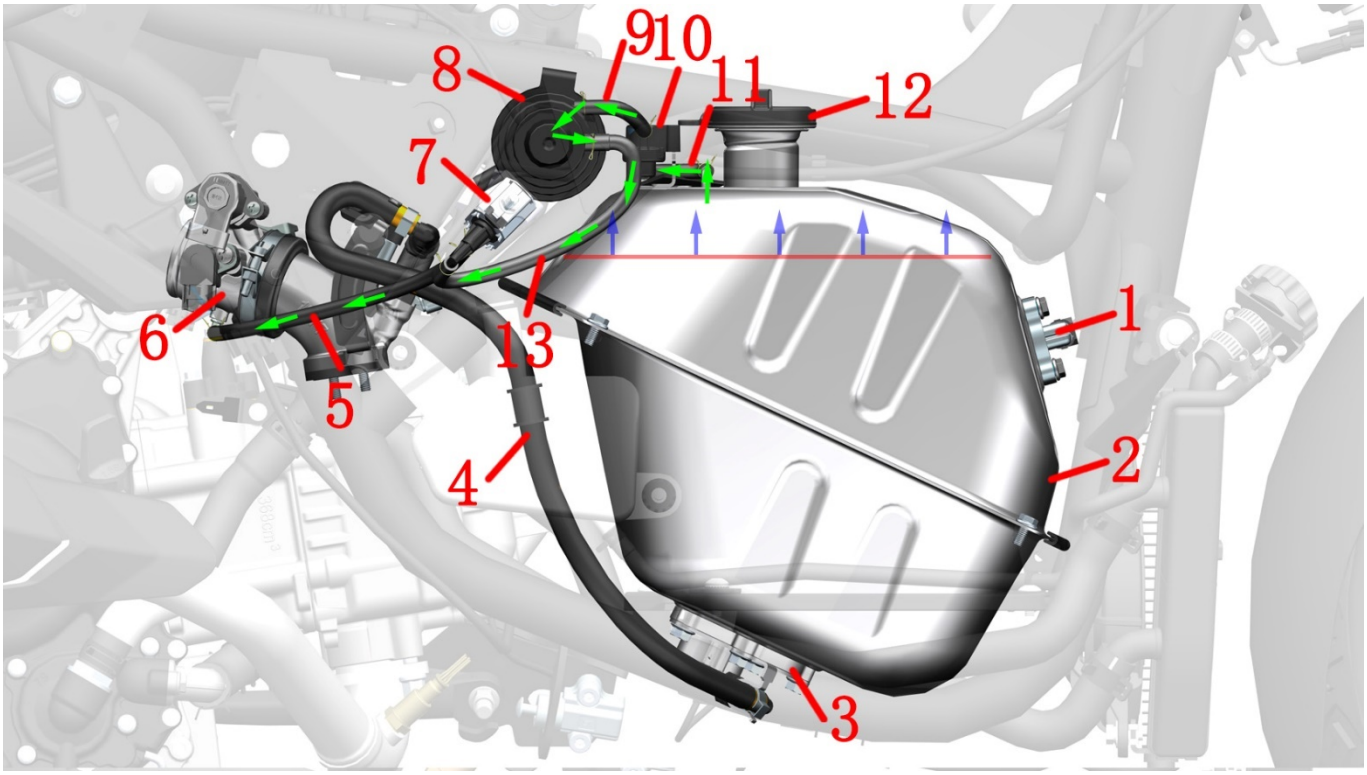

1- Fuel level sensor 2- Fuel tank 3- Fuel pump 4- High pressure fuel pipe 5- Solenoid valve outlet pipe 6-Throttle valve body assembly 7- Carbon tank solenoid valve 8-Carbon tank 9- Adsorption pipe 10- External oil and gas separator 11-Vent pipe 12-Fuel tank cap 13- Solenoid valve intake pipe

Fuel evaporation:
Oil and gas → Vent pipe → External oil and gas separator → Adsorption pipe → Carbon tank → solenoid valve intake pipe → solenoid valve outlet pipe → throttle valve body assembly → intake manifold → cylinder

The fuel evaporative pollutant control system can only be checked after the cover is removed.
Check the carbon canister for cracks or damage.
Check the suction/vent pipe for cracks or damage.
Check whether the solenoid valve of the carbon canister is working properly.
Check whether the solenoid valve inlet and outlet pipes are cracked or damaged.
Check whether the hoses are bent, causing the airflow to be unsmooth.

D350/D250 fuel evaporation

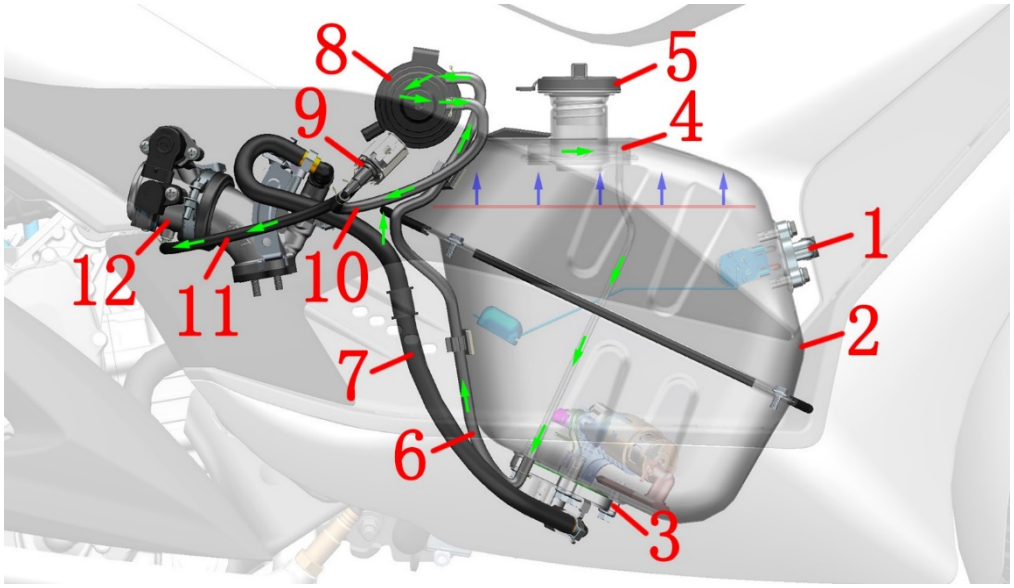

1- Fuel level sensor 2- Fuel tank 3- Fuel pump 4- Oil-air separator (welded inside the fuel tank) 5- Fuel tank cap 6- Adsorption/vent pipe 7-High pressure fuel pipe 8-Carbon tank 9-Carbon tank solenoid valve 10- Solenoid valve intake pipe 11- solenoid valve outlet pipe 12-throttle valve body assembly

Fuel evaporation:

Oil and gas → oil and gas separator (inside the oil tank) → adsorption/vent pipe → solenoid valve intake pipe → solenoid valve outlet pipe → throttle valve body assembly → intake manifold → cylinder

The fuel evaporative pollutant control system can only be checked after the cover is removed.

Check the carbon canister for cracks or damage.

Check the suction/vent pipe for cracks or damage.

Check whether the solenoid valve of the carbon canister is working properly.

Check whether the solenoid valve inlet and outlet pipes are cracked or damaged.

Check whether the hoses are bent, causing the airflow to be unsmooth.

D125/D125(2024)/D155 fuel evaporation

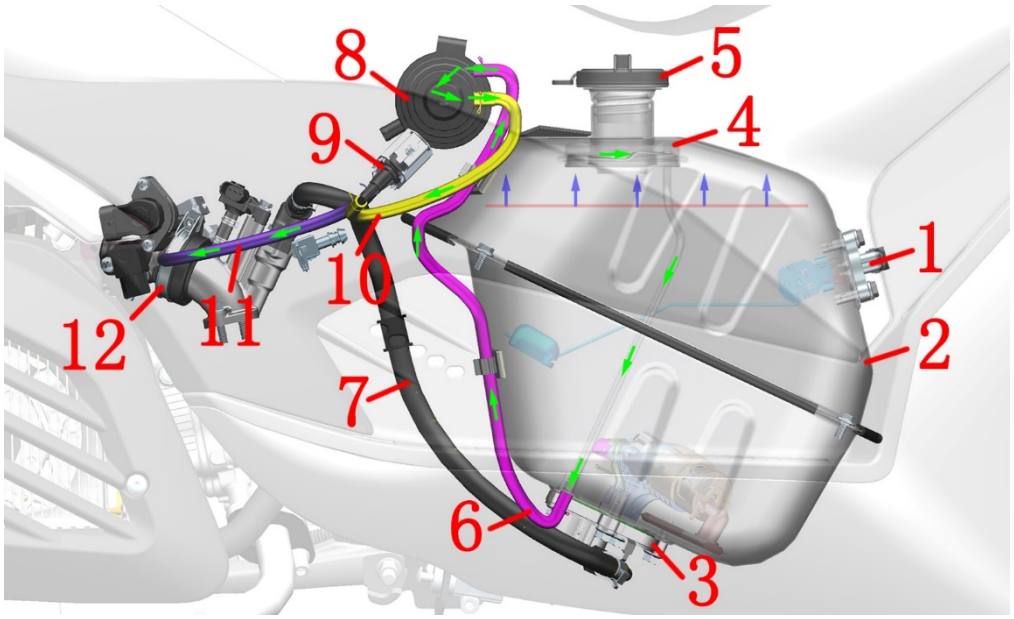

1- Fuel level sensor 2- Fuel tank 3- Fuel pump 4- Oil-air separator (welded inside the fuel tank) 5- Fuel tank cap 6- Adsorption/vent pipe 7-High pressure fuel pipe 8-Carbon tank 9-Carbon tank solenoid valve 10- Solenoid valve intake pipe 11- solenoid valve outlet pipe 12-throttle valve body assembly

Fuel evaporation:

Oil and gas → oil and gas separator (inside the oil tank) → adsorption/vent pipe → solenoid valve intake pipe → solenoid valve outlet pipe → throttle valve body assembly → intake manifold → cylinder

Radiator

DANGER

●The vehicle must be parked on a flat and stable ground or a lifting platform.
●Once the engine and muffler have cooled down, the operation can be performed.
●Swallowing or inhaling the coolant will cause harm to the human body.

CAUTION

●Regularly check the coolant level, and always keep the position not lower than the "L" line.
●It is recommended to replace the coolant every 3 years or 30,000 kilometers (18641 mile).
●Swallowing or inhaling the coolant will cause certain harm to the human body. After each addition of coolant, wash hands, face and any exposed skin thoroughly in time. If swallowed by mistake, immediately contact the poison control center or hospital; if inhaled, immediately go to a ventilated environment. If it accidentally splashes into the eyes, immediately rinse the eyes with a large amount of running water and seek medical advice or consultation in time. Keep away from children and pets.
●The engine coolant must be a model suitable for aluminum radiators, based on ethylene glycol. Use a coolant that is suitable for aluminum radiators, which is a mixture of coolant concentrate and distilled water in a certain proportion. If you need to add water, you can only add distilled water. Other water quality may corrode the engine cooling system or cause more serious consequences.
●It is necessary to select the corresponding antifreeze liquid according to the lowest possible local temperature. The vehicle added to the factory is Total -35°C (-31F) green antifreeze. D350 the total amount of coolant is 1.44L (1.52 US qt, 1.27 lmp qt, 0.38 US gal, 0.32 lmp gal). D125 the total amount of coolant is 0.78L (0.82 US qt,0.69 lmp qt, 0.21 US gal, 0.17 lmp gal). D250 the total amount of coolant is 1.34L (1.42 US qt,01.18 lmp qt, 0.35 US gal, 0.29 lmp gal).
●Coolant may damage the paint surface. Pay attention when adding it. A small amount of splash should be wiped off with a clean soft cloth immediately.

1. Check the coolant

a. Straighten the vehicle through the right rear gap and use a flashlight to check that the coolant level is between "H" and "L". Pay attention to the ground as flat and level as possible, do not check on slopes. And the engine needs to be in a cold state.



2. Add coolant (antifreeze) to the Coolant expansion tank

If the water level of the Coolant expansion tank is lower than the "L" line, an appropriate amount of coolant must be added. If there is no coolant in the Coolant expansion tank, check the cooling system for leakage first, and it must be repaired before it can be replenished.

a. Use 4# inner hexagon to remove the bolt (1) and expansion nail of the right foot bracket after the right cover is connected; Grasp the mark of the right lid (green rectangle) with your hand, and pull it out alternately from the outside to the inside in the direction of the small arrow, until all 5 mushroom buckles (red circles) on the right cover are pulled out, and remove the right cover.

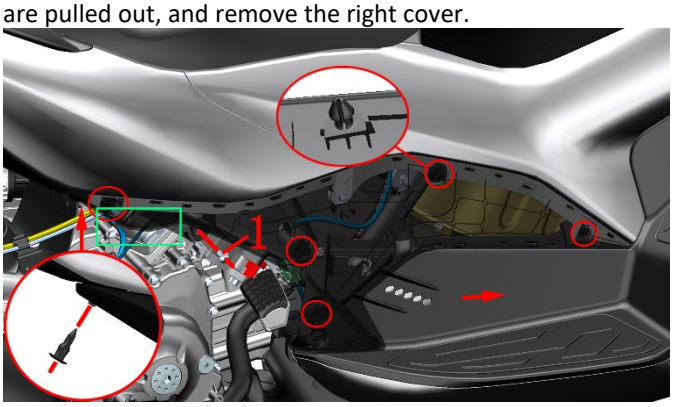

b. Lift the rubber cover of the auxiliary tank and add an appropriate amount of coolant to it with the help of the funnel. Straighten the vehicle with a flashlight to see if the liquid level of the auxiliary tank is between "H" and "L". Pay attention to the ground as flat and level as possible, do not check on slopes. And the engine needs to be in a cold state.

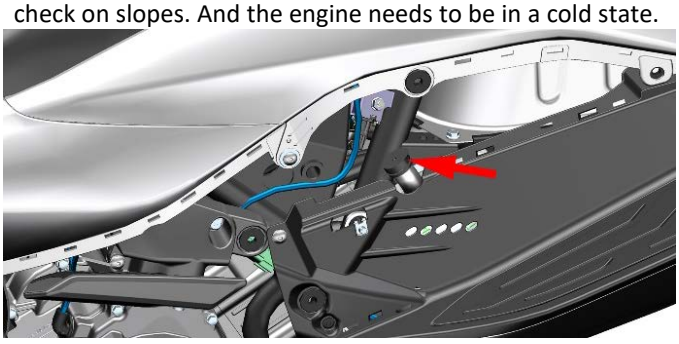

3.D368/350/250 Add coolant to the Radiator

a. Turn the fork to the bottom to the right and add coolant by unscrewing the main tank filler cap counterclockwise.

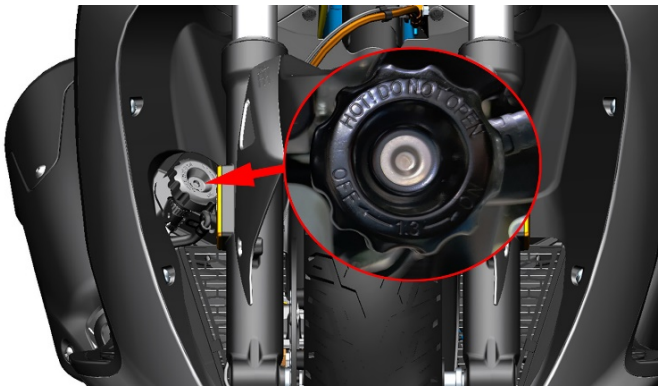

b. Use a 10# sleeve to loosen the thermostat bleed bolt (2) counterclockwise by 4 to 5 turns, do not completely remove it. Note that a small container is required to receive the coolant overflowing from the exhaust bolt. Do not allow the coolant to drip directly onto the surface of the part.

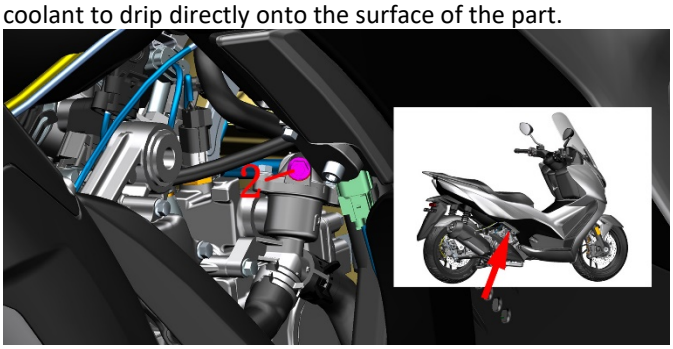

c. Put on waterproof gloves and add coolant to the water inlet of the Radiator with the help of an extended funnel. Until the position of the vent bolt of the thermostat is stably overflowed with coolant, the coolant level can be seen at the water filling port.

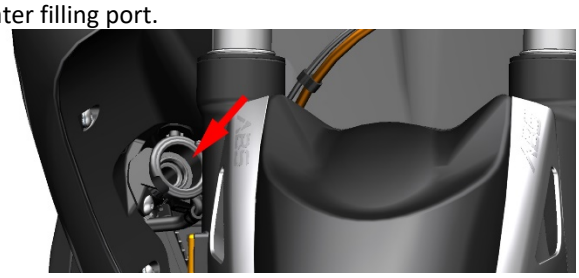

d. Tighten the filler cap of the Radiator. Tighten the exhaust bolt; torque: 8～10N.m (0.8～1 kgf.m, 6～7 lbf.ft).

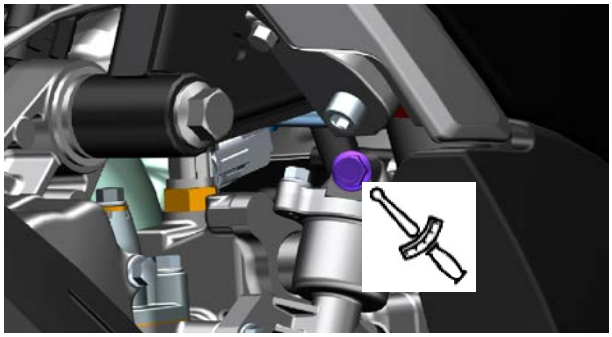

4. Put coolant

D350/D250/D368

a. Place an oil pan underneath, wear waterproof gloves and use a 10# sleeve to remove the drain bolt(3) and O ring (4).

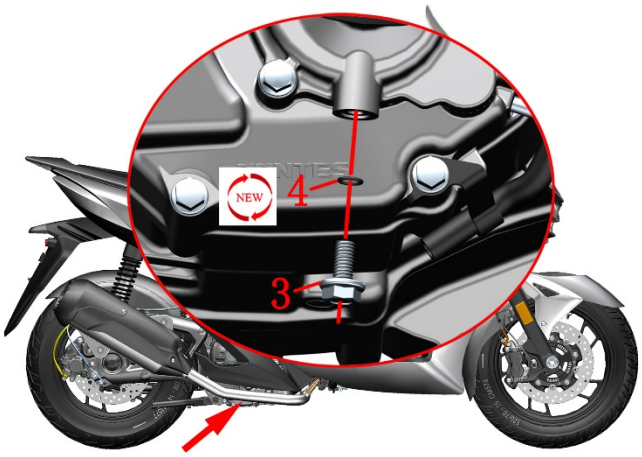

b. Remove the filler cap of the Radiator to accelerate the flow of coolant.

c. Wipe all the joint surfaces clean with a non-woven cloth. Check whether the bolt(3) joint surfaces are scratched, if any, replace them with new ones. The O ring(4) needs to be replaced every time it is disassembled.

d. Put the new O-ring(4) into the bolt(3) first, taking care not to scratch the O-ring. Torque of bolt(3): 8～10N.m (0.8～1 kgf.m, 6～7 lbf.ft).

D125/D155

After removing the water tank cover according to the previous steps, refer to D350 for maintenance.

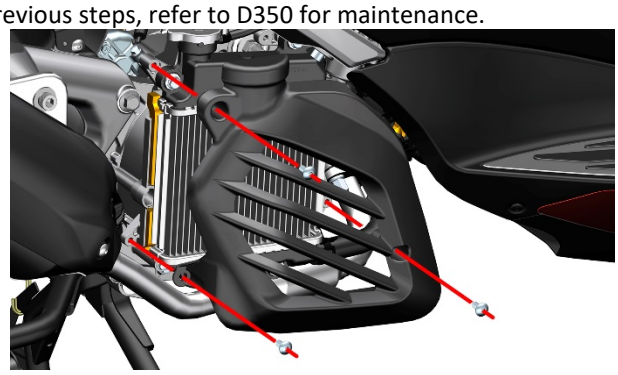

D125

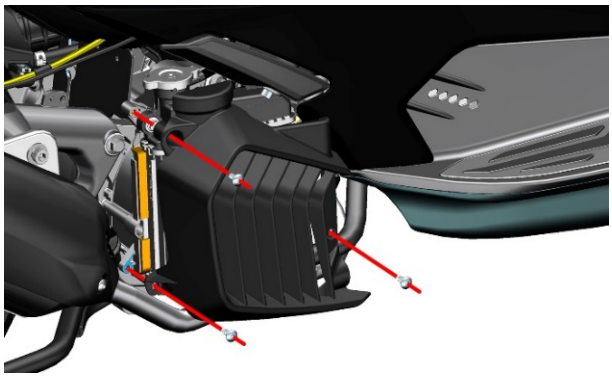

D125(2024)/D155

Be careful not to open the water tank cap, once opened, the coolant will flow out from here.

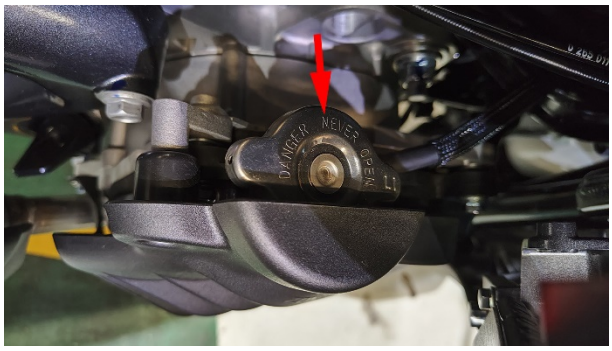

5. Check whether the fins of the radiator water tank are deformed or the air duct is blocked

D350/D250/D368

a. Use compressed air or low-pressure water guns, brushes, etc. to remove dirt such as sediment and insects on the surface of the radiator. When using compressed air, be careful not to get too close to the fins. It is forbidden to directly flush the radiator with a high-pressure water gun to avoid fin deformation and blocking the air duct.

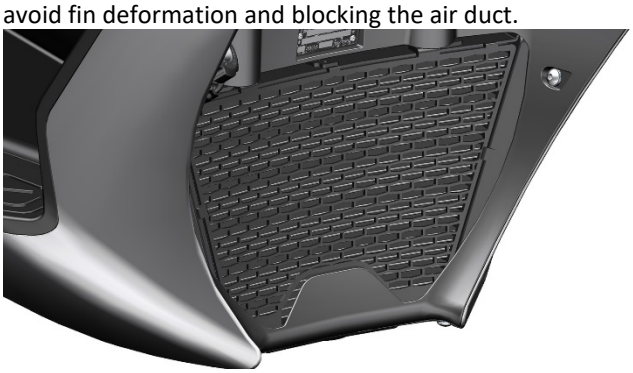

D125/D155

After removing the water tank cover according to the previous steps, refer to D350 for maintenance.

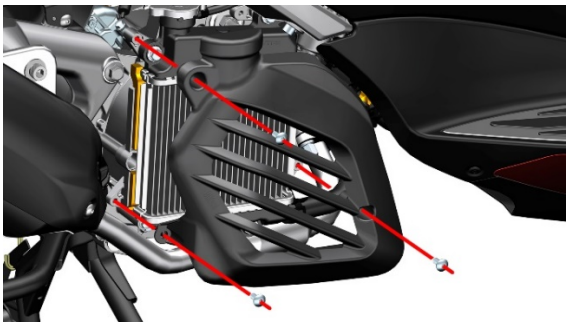

D125

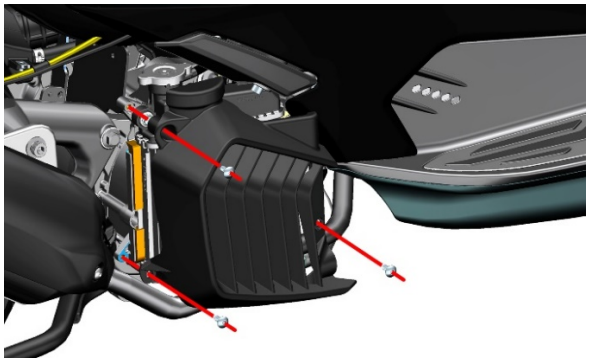

D125(2024)/D155

Be careful not to open the water tank cap, once opened, the coolant will flow out from here.

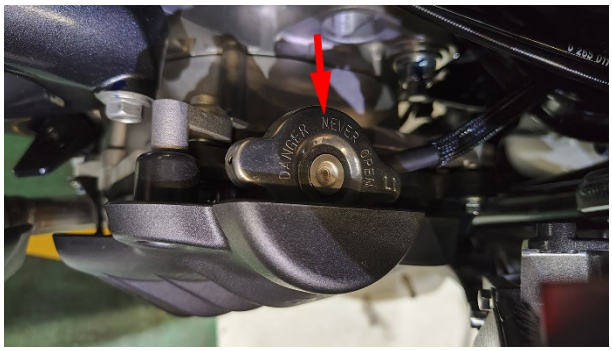

6. Check all water pipes for leaks; aging.

D350/D250/D368

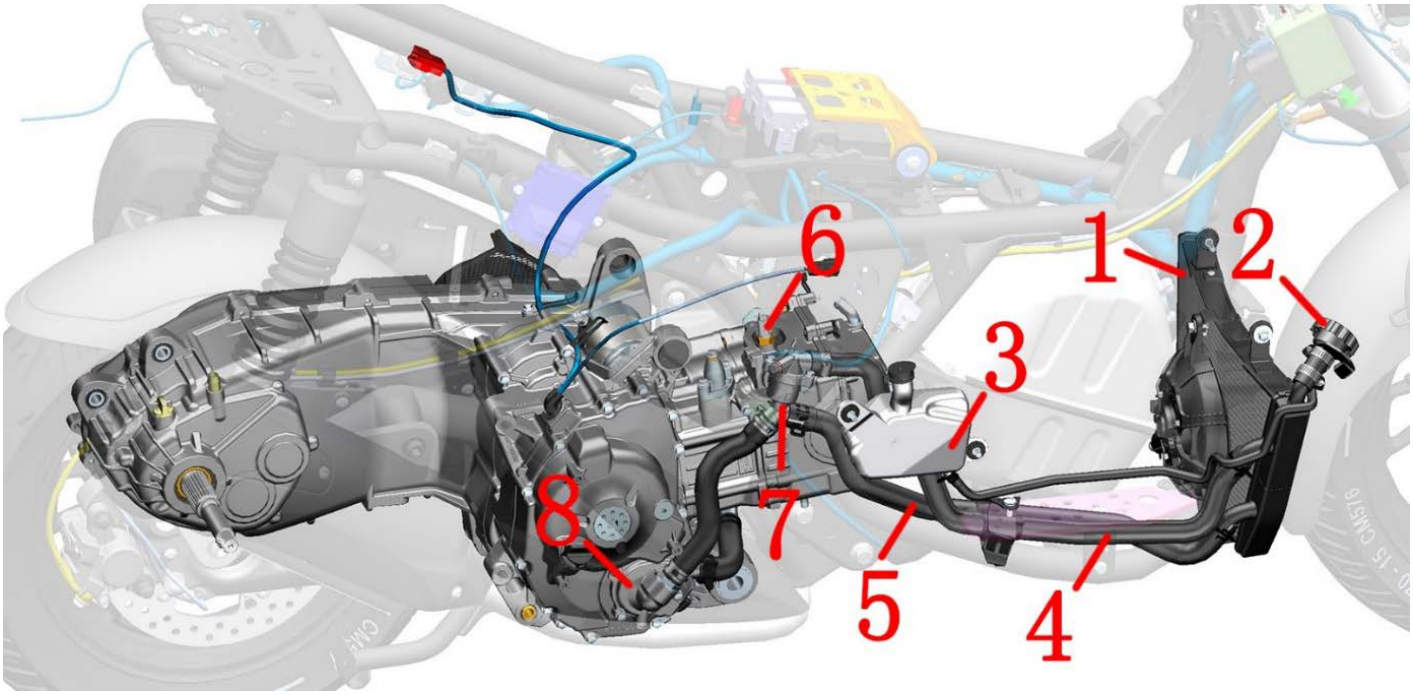

1- Main water tank 2- Water tank filling port 3- Secondary water tank 4- Main water tank water inlet pipe 5- Main water tank water outlet pipe 6- Water and oil shared sensor 7- Thermostat 8- Water pump cover assembly

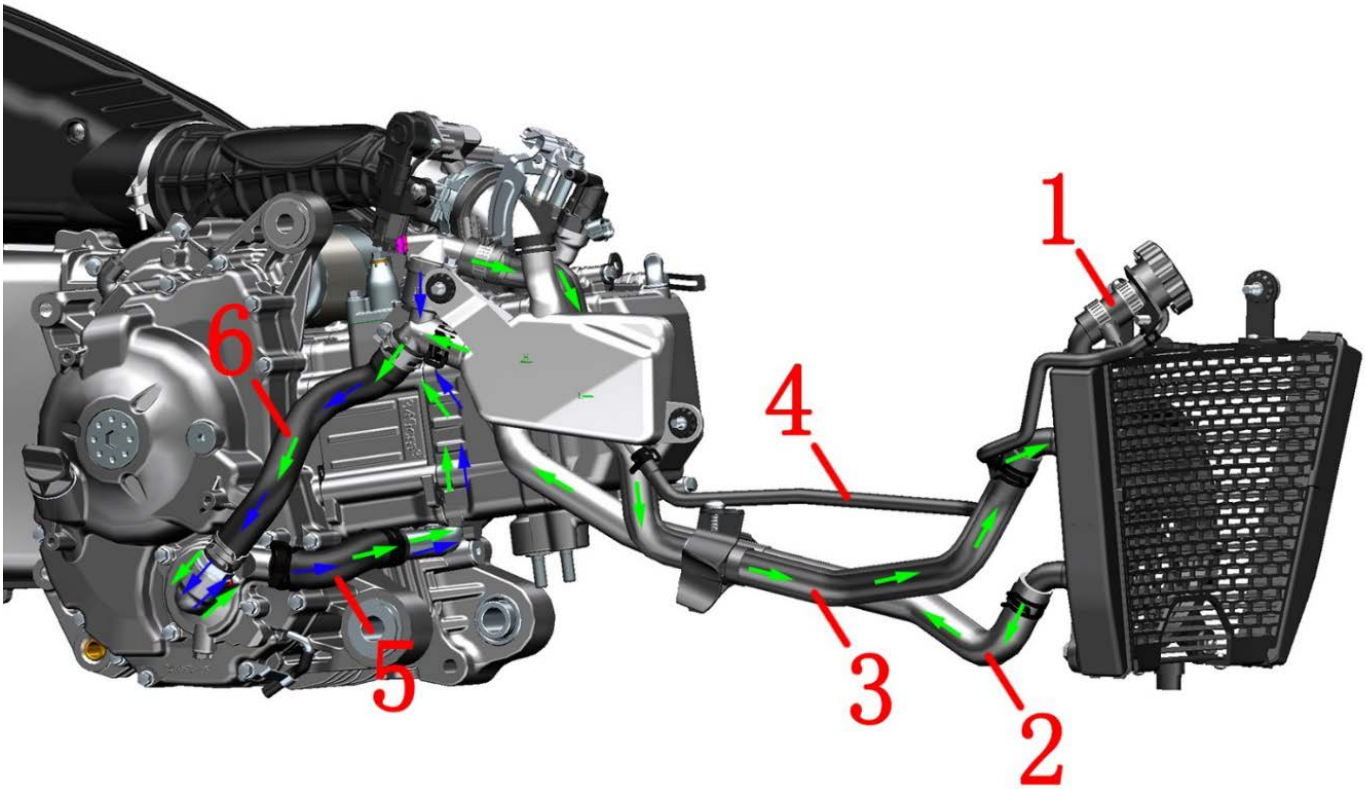

1- Water inlet pipe 2- Secondary water tank connection pipe 3- Main water tank inlet pipe 4- Small radiator outlet pipe 5- Cylinder inlet pipe 6-Water pump cover inlet pipe

D125

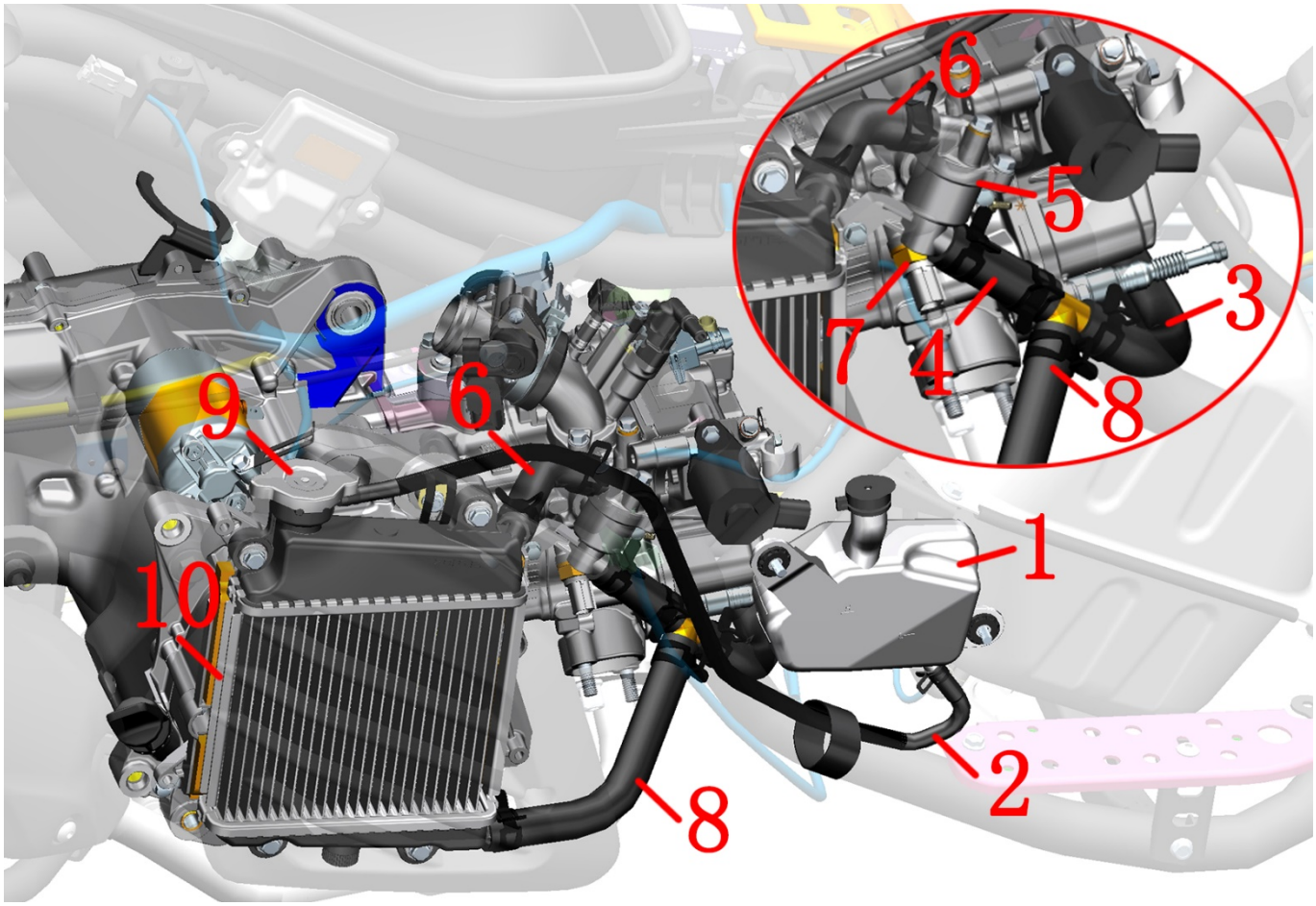

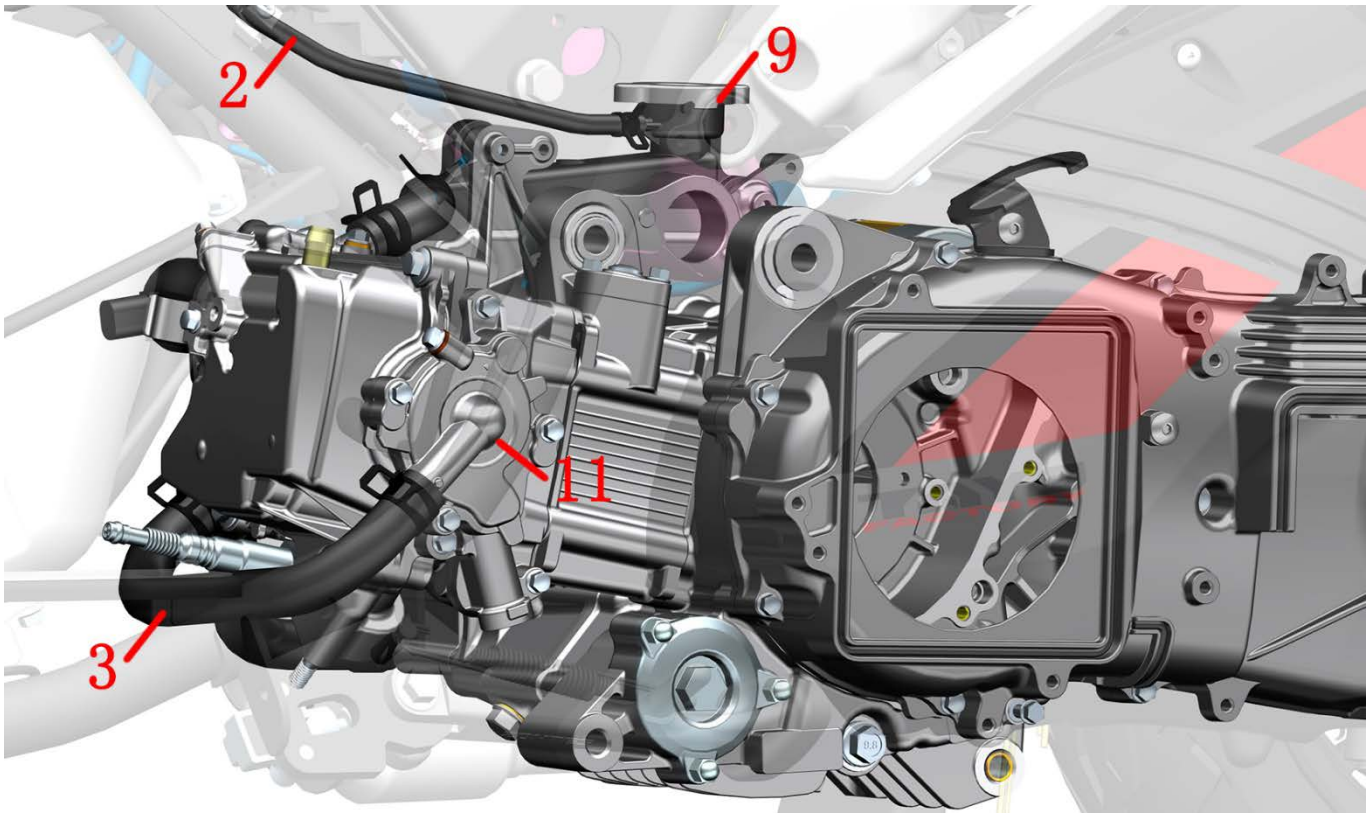

1-Secondary water tank 2-Secondary water tank link pipe 3-Engine inlet pipe 4- Thermostat outlet pipe 5- Thermostat 6- Water tank inlet pipe 7- Water and oil shared sensor 8- Water tank outlet pipe 9- Water tank filling port 10- Radiator assembly 11- Water pump cover assembly

Fuel pipe

Caution:

●A small amount of fuel will flow out when the high-pressure fuel pipe is removed.

●Work in an open and ventilated place. Smoking, mobile phone calls, etc. that may cause sparks are prohibited on the job site.

1. Check the fuel pipe for leaks with the help of an endoscope with LED light



D350/250



D125



D125(2024)/D155



The above picture shows the equipment with LED endoscope. The picture comes from the Internet and the copyright belongs to the author of the original picture. Do not use it for other purposes.

2. Replace high pressure oil pipe

a. Refer to steps a to c of "Remove stepping motor and clean up carbon deposits" in the throttle valve body, first remove the cushion and storage box components, and remove them as shown in the figure below.

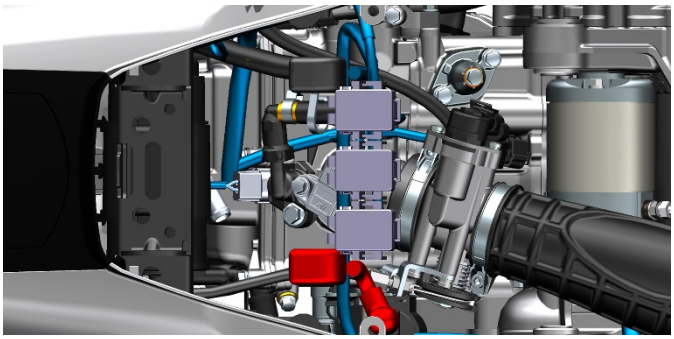

b. Remove a total of 4 pcs swell nails indicated by the arrow. For instructions on disassembly and assembly of swell nails, please refer to the pre-service instructions in this chapter.

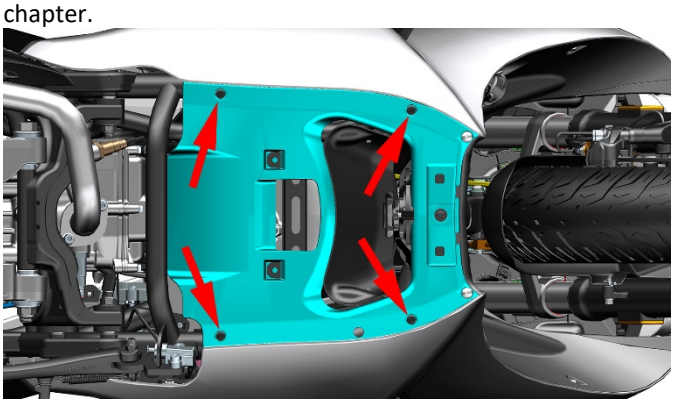

c.Use 4# inner hexagon to remove the M6×14 bolts.

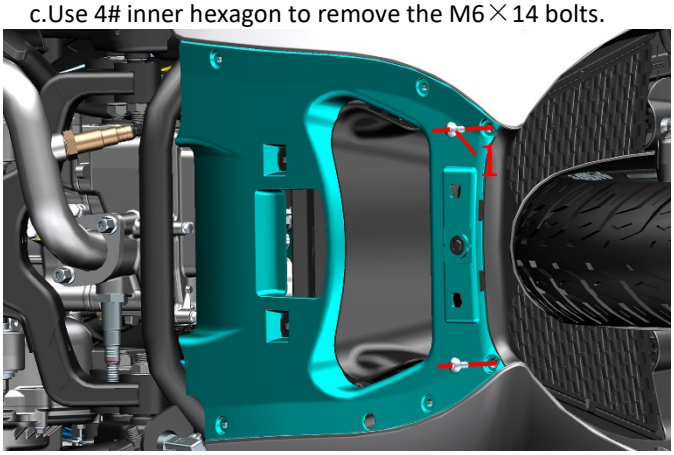

d. Pull down the surrounding bottom plate in the center of the front part (near the front wheel) with one hand, and pull down the surrounding bottom plate after pulling about 20mm (0.8 in) toward the rear wheel with the other hand. There is a bracket at the place shown in the small picture, so it cannot be pulled down directly.

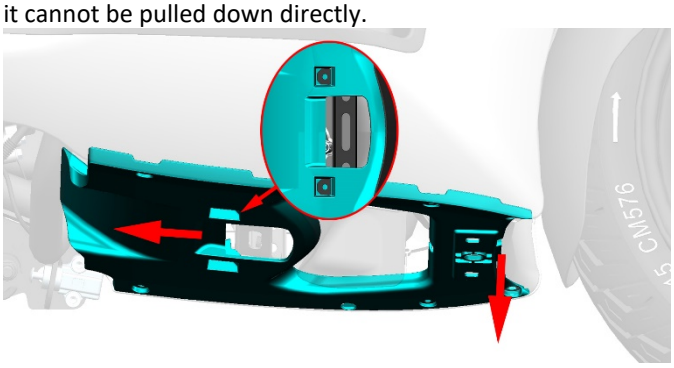

e. Unplug the fuel pump and start the engine at idle speed until the engine stops. Turn the engine stop switch to "", power off the vehicle and lock the vehicle.

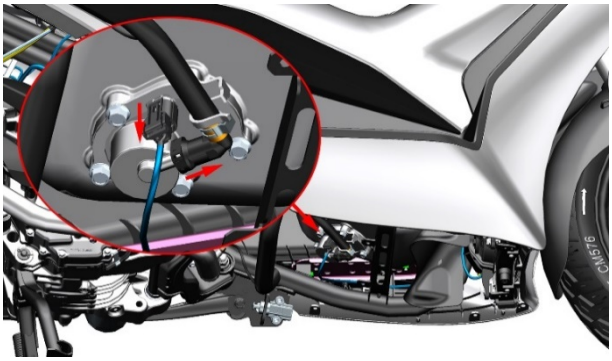

f. Pull out the high-pressure oil pipe from the bracket at the cylinder head.

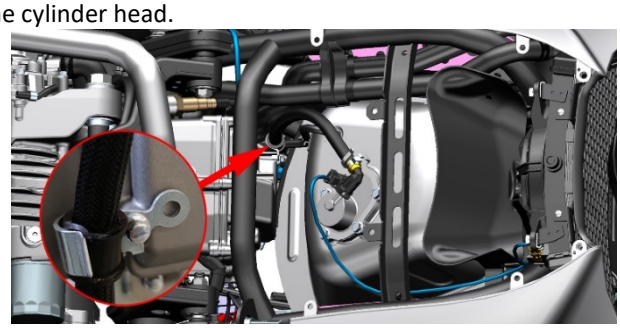

g. Pull out the high-pressure oil pipe in the direction of the arrow after pressing down the anti-dropping lock.

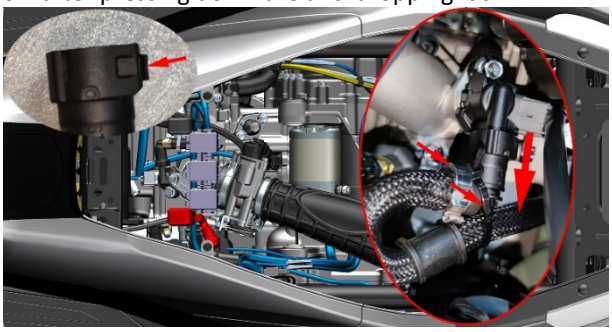

D350/D250

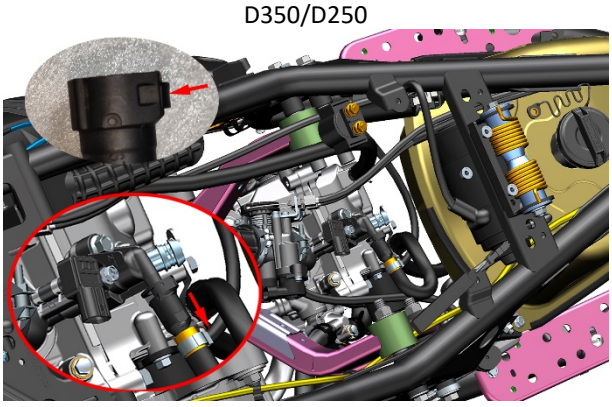

D125/D125(2024)/D155

h. After replacing the new high-pressure oil pipe, refer to the disassembly steps to restore it.

3. Fuel pump

3.1 Use oil pressure gauge to measure fuel pressure

a. Refer to steps a to c of "Remove stepper motor and clean up carbon deposits" in the throttle valve body, first remove the seat cushion and storage box components, and remove them as shown in the figure below.

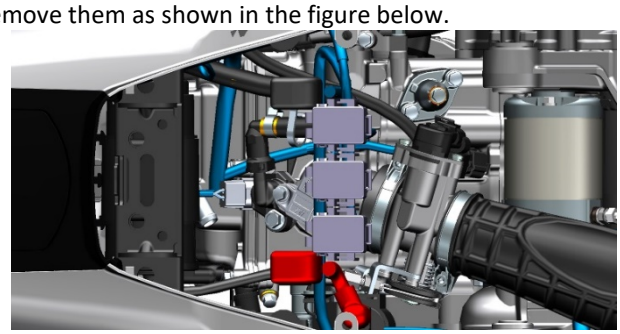

b. Unplug the fuel pump and start the engine to idle until the engine stops. Turn the engine stop switch to "", power off the vehicle and lock the vehicle. After putting on waterproof and oil-proof gloves, press the anti-trip lock and pull out the high-pressure oil pipe in the direction of the arrow.

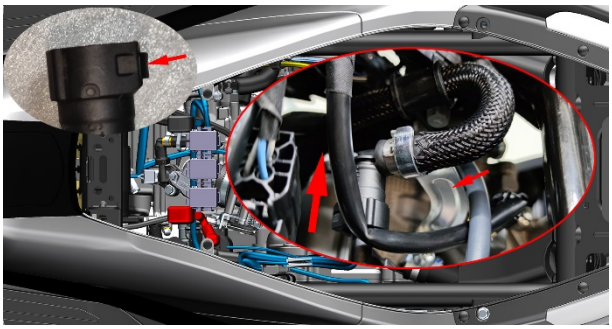

D350/D250

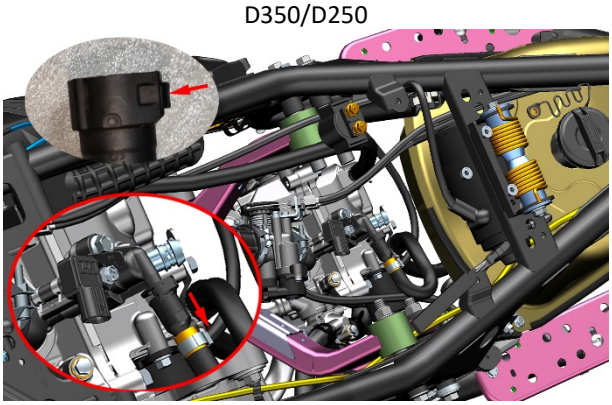

D125/D125(2024)/D155

c. Connect the high-pressure oil pipe of the original car to the pressure gauge, and find another high-pressure oil pipe to connect the pressure gauge and the fuel injector.

Start the vehicle, let the engine run at idle speed, and measure the fuel pressure.

D350 the standard pressure is:

350±10kPa (3.75±0.1Kgf/cm2, 50.8±1.45 psi). Check valve performance: hold the pressure for 1 minute, the pressure should be ≥300kPa (3.06Kgf/cm2, 43.5 psi).

D125/D125(2024)/D155/D250 the standard pressure is:

300±10kPa (3.06±0.1Kgf/cm2, 43.5±1.45 psi). Check valve performance: hold the pressure for 1 minute, the pressure should be ≥240kPa (2.45Kgf/cm2, 34.8 psi).

3.2 Simple test of fuel pump

If you do not have the special equipment conditions, you can do a simple test.

After the vehicle is in the stalled state, unlock the vehicle and turn on the stall switch. If you do not start the engine, you should be able to hear the sound of the fuel pump; or pinch the high-pressure fuel pipe from the bottom with your hands, and you should feel obvious pressure. Take care to avoid the muffler to prevent burns. If it is in the engine starting state, the whole vehicle shall be powered off for more than 10 seconds and then check according to the above operation.

4. Treatment of abnormal fuel pressure

If the fuel pressure is higher than the standard value, replace the fuel pump. If it is lower than the standard value, you need to inspect the following items:

a. Whether the fuel pipe is leaking;

b. Whether the fuel tank vent pipe is blocked or bent excessively;

c. Whether the fuel pump filter is blocked;

d. Whether the fuel pump is faulty;

e. Whether the fuel is insufficient.

WARNING

●When pulling out the high-level oil pipe, be sure to pull it toward the axis, and do not press or push or pull The protruding part of the fuel pump and nozzle holder.

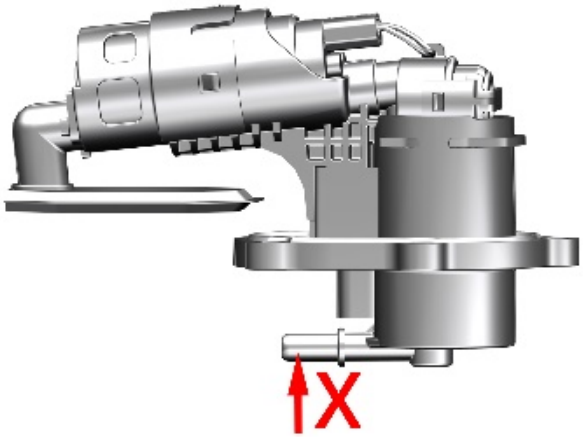

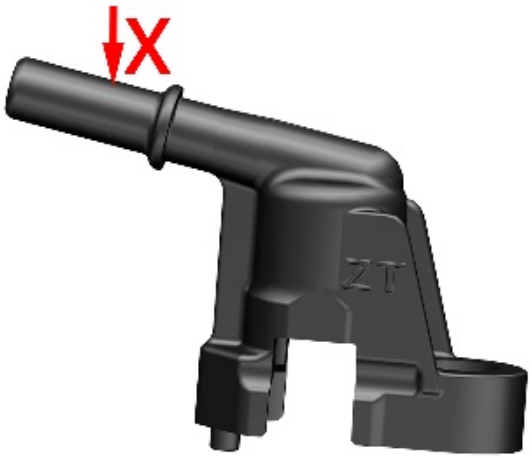

●It is forbidden to smoke, dial mobile phones and other actions that may cause a fire at the demolition site.

●The fuel pump is a precision component that needs to be assembled in a dust-free workshop and requires strict testing, so it is forbidden to disassemble it by yourself.

CAUTION

●The EFI system needs to be reset after reinstalling the battery. For specific operations, see the precautions in the driver's manual or the throttle valve body chapter of this manual.

Braking System

Caution:

●For the layout of the brake hose on the vehicle, please refer to the brake system accessories distribution diagram in the "Vehicle Information" chapter of this manual.

Caution:

In order to facilitate after-sales tracking, those who need to purchase brake hoses, disc brake calipers, disc brake main pumps, and hydraulic control units must be reviewed by our company before they can be purchased. Domestic customers can fill in the frame code and engine on the official website before purchasing. Foreign customers need to contact the corresponding salesperson and fill in the corresponding form before purchasing. The specific process can be found by the salesperson.

D350/D250 Braking system component diagram:

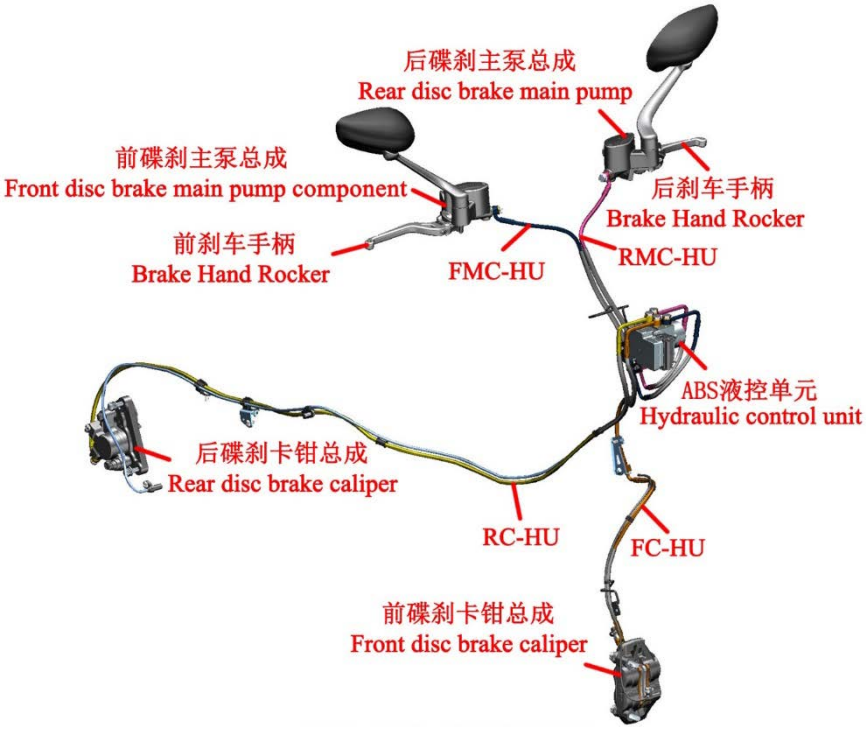

D368 Braking system component diagram:

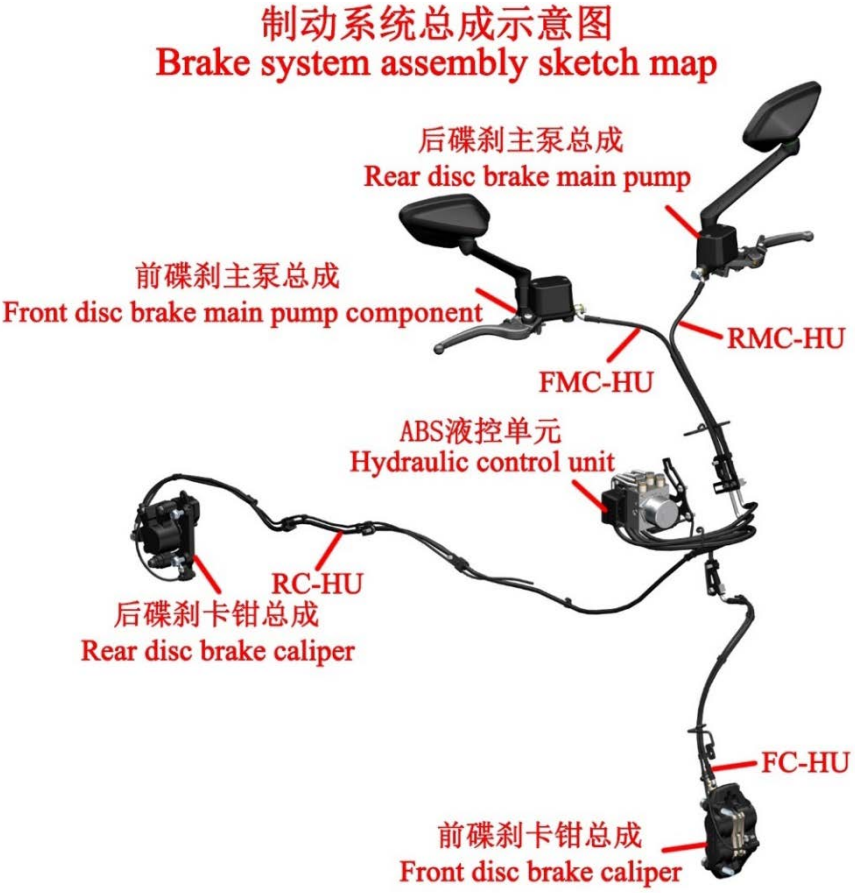

D125 Braking system component diagram:



D125(2024)/D155 Braking system component diagram:



Caution:

●This inspection should be completed by a qualified maintenance organization.

●Regularly check whether the brake fluid level is at 3/4 of the observation window.

●If you accidentally swallow the brake fluid, you should contact the poison control center or hospital immediately; if you accidentally get the brake fluid into your eyes, rinse with water and seek medical attention immediately.

●Brake fluid must be kept away from children and pets.

●It is strictly forbidden to directly flush the main pump with high-pressure water.

1. Check the brake components

a. Check whether the liquid level of the front disc brake main pump and the rear disc brake main pump are above the "LOWER" line. Check whether there is brake fluid leakage at the oil pipe joints. Observe the color of the brake fluid. Normally, it should be light yellow. If the color becomes dark, it is recommended to replace the brake fluid.

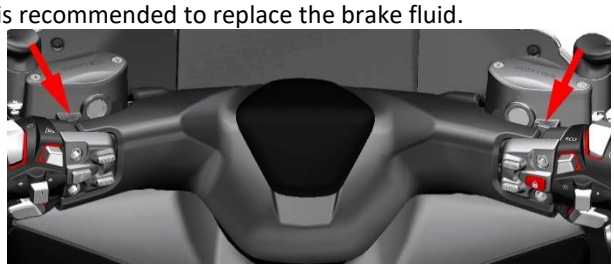

b. Park the vehicle on a flat ground or a lifting platform, and lower the main support. Check whether there is brake fluid leakage at the oil pipe joints of the main pump, ABS hydraulic control unit and caliper. The endoscope with LED can be used to check the oil pipe joints of the ABS hydraulic control unit and the main pump, or to remove the corresponding cover for inspection.

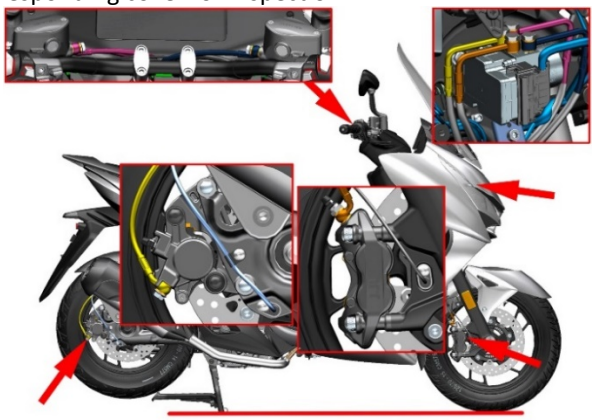

D350/D250

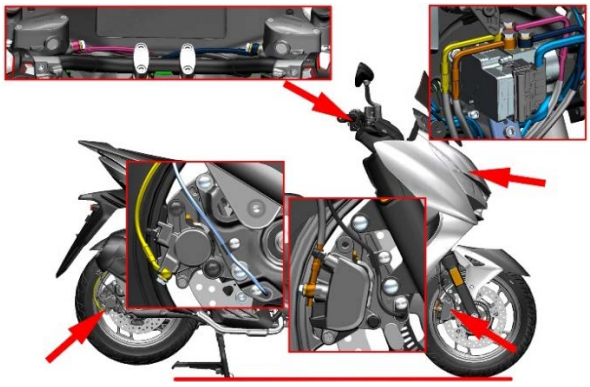

D125/D125(2024)/D155

c. Measure the thickness of the front and rear brake discs. D125/D125(2024)/D155:If it is less than 4.0mm (0.16 in); D350/D250:If it is less than 4.5mm (0.18 in), replace it.Hang the front wheel in the air and turn the front wheel by hand to observe whether there are obvious damages on the surface, such as pits, deep scratches, grooves, etc. Replace it if necessary. Feel with your hands whether there is a noticeable sound of grinding the brake disc when turning the front wheel. Observe from the front whether the brake disc swings when turning the front wheel; if there is any swing, please remove it according to the steps of dismantling the brake disc, and place it on a standard platform, use a dial indicator to measure the run out or use a feeler gauge to check the brake disc and The gap of the standard platform; such as> 0.08mm (0.003 in), you need to replace the new brake disc. Check the rear brake disc in the same way.

⚠WARNING

●Before checking the brake disc operation, be sure to wait for the brake disc to cool down before proceeding.
●It is forbidden to reduce the temperature of the brake disc by spraying water, which may cause deformation of the brake disc and abnormal noise.
●If the brake disc anti-theft lock is used, please confirm whether it has been removed before driving the vehicle.
●Clean up the silt attached to the brake discs diligently.

d.D350/D250:Use 5# inner hexagon to remove bolt(1). Remove bolt(2) with a 8# inner hexagon. Standard torque of bolt(2): 45-50N.m (4.6-5.1 kgf.m, 33-37 lbf.ft). Do not operate the brake handle after removing the caliper.

D125/D125(2024)/D155: Use 5# inner hexagon to remove bolt(1). Remove bolt(2) with a 14# sleeve. Standard torque of bolt(2):24N.m (2.4 kgf.m, 18 lbf.ft). Do not operate the brake handle after removing the caliper.

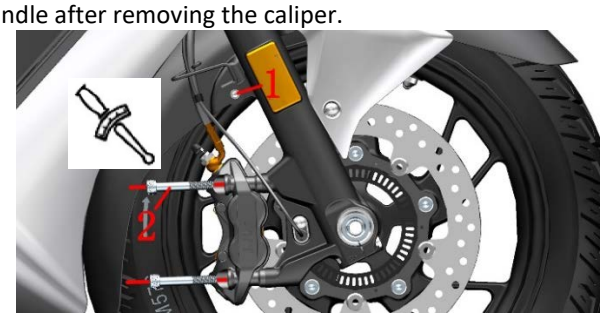

D350

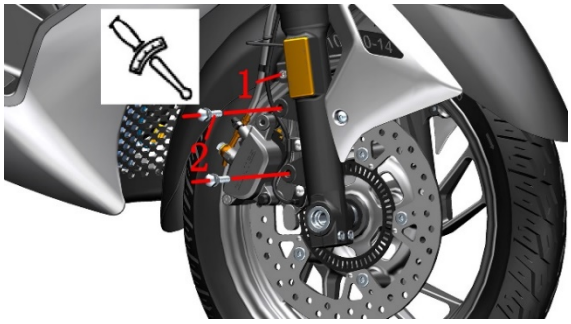

D125/D125(2024)/D155

e. Pull out the front brake caliper assembly and check the wear of the brake pads. If worn or nearly worn to the limit position, new brake pads must be replaced in pairs.



f. Take out the wheel speed sensor① from the wire clamp②. Remove bolt(2) with a 14# sleeve. Standard torque of bolt(2): 24N.m (2.4 kgf.m, 18 lbf.ft). Do not operate the brake handle after removing the caliper.

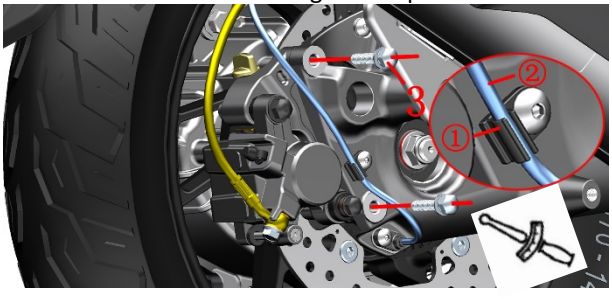

g. Pull out the rear caliper assembly and check the wear of the brake pads. If it is nearly worn or worn to the limit position, new brake pads must be replaced in pairs.



DANGER

●A qualified maintenance organization should check and maintain the brake pads on a regular basis.
●Do not drive immediately after replacing a new brake disc or brake pad. Be sure to hold and release the brake handle several times to allow the brake disc and brake pads to fully fit together to restore normal grip and to make the brake fluid circulate stably.
●The braking distance may be longer than the original braking distance after replacing the new brake disc or brake pad. It needs to be used for about 300 kilometers (186 mile). Good braking effect. Allow enough braking distance before running in sufficiently to ensure driving safety.

WARNING

●The brake pads must be replaced in pairs, only replacing one side will cause uneven braking.
●If the position of the brake pads is incorrect, it is forbidden to operate the brake handle. Otherwise, it will be difficult to reset the piston and may cause brake fluid leakage.

2. Check the front and rear brake switches

2.1 Check the brake switch

Hold the brake handles of the main pumps of the front and rear disc brakes respectively, and observe whether the rear brake lights are on. If it does not light, you need to investigate: whether the brake switch is faulty; whether the rear brake light is faulty; whether the fuse has blown; whether the circuit is open.

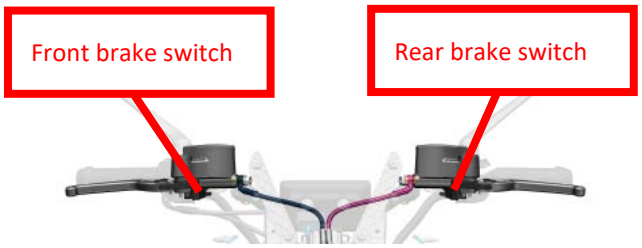

2.2 Replace the brake switch

Take the replacement of the rear brake switch as an example to explain.

a. Pull out the two plugs of the brake switch in the direction of the arrow without distinguishing the positive and negative poles.

b. Use a Phillips screwdriver to remove the bolt① to remove the rear brake switch(1).

c. Replace with a new switch, pay attention to align the switch boss and the limit hole of the brake main pump.

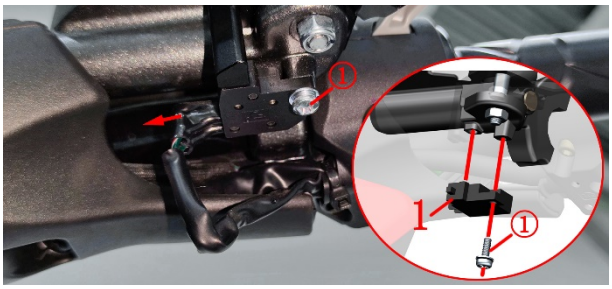

The replacement procedure of the front brake switch is the same as that of the rear brake switch. The throttle cable needs to be removed to facilitate the removal of the bolt①.



3. Lubricate the movable parts of the brake handle

3.1 Lubricate the front brake handle.

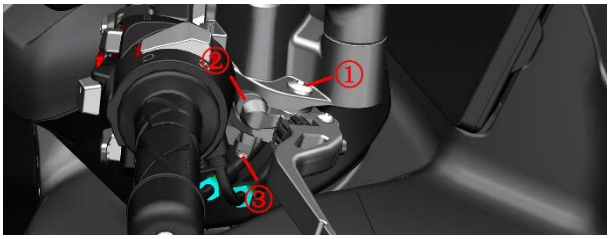

a. Use a 10# torx wrench to rotate counterclockwise to remove the nut③.

b. After grasping the handle, use a 5# inner hexagon counterclockwise rotation to remove the bolt①; remove the brake handle.

c. Wipe the handle pusher and the outer end of the piston with a clean non-woven cloth (the position shown in Figure②), and apply high vacuum silicone grease evenly.

d. Wipe clean the bolt①, and apply high vacuum silicone grease evenly.

e. Reinstall.

3.2 After lubricating the brake handle

Refer to the above method to lubricate the rear brake handle.

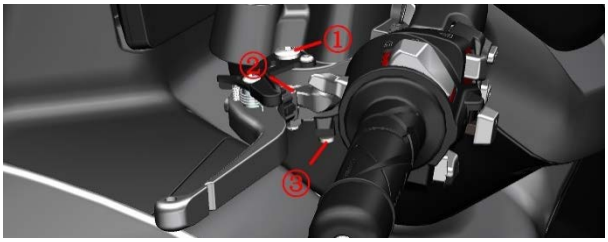

D350/D250

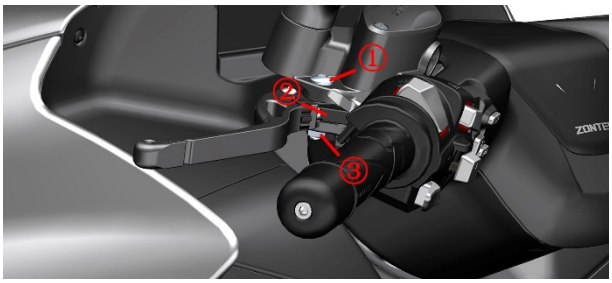

D125/D125(2024)/D155

3.3 Replacing the brake handle

Refer to the previous steps to remove the nut③ and bolt① to replace the new brake handle.

4. Adjust the brake handle

In order to adapt to more drivers driving this model, it is equipped with an adjustable brake handle. Take the right front brake handle as an example. Push the end of the handle to the end in the direction of the arrow, and adjust the wheel clockwise by hand. The extension of the push head will increase the distance between the handle and the rubber sleeve, and vice versa. The adjustment method of the rear brake handle on the left is opposite to that on the right.

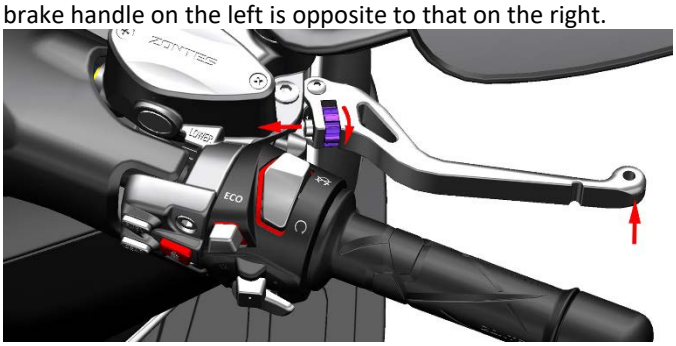

5. Replace the brake pads

DANGER

●A qualified maintenance organization should check and maintain the brake pads on a regular basis.
●Do not drive immediately after replacing the new brake pads. Be sure to hold and release the brake handle several times to allow the brake disc and brake pads to fully fit together to restore normal grip and to make the brake fluid circulate stably.
●The braking distance may be longer than the original braking distance after replacing the new brake pads. It needs to be used for about 300 kilometers (186 mile), and the best braking effect can be achieved after the brake disc and the brake pads are fully run-in. . Allow enough braking distance before running in sufficiently to ensure driving safety.

WARNING

●The brake pads must be replaced in pairs, only replacing one side will cause uneven braking.
●The brake pads must be assembled correctly.
●Do not operate the brake handle after removing the brake pads.

5.1 Replace the front brake pads

D350/D250/D368

a. Remove both circlips by clamping the circlip ① with pointed nose pliers.

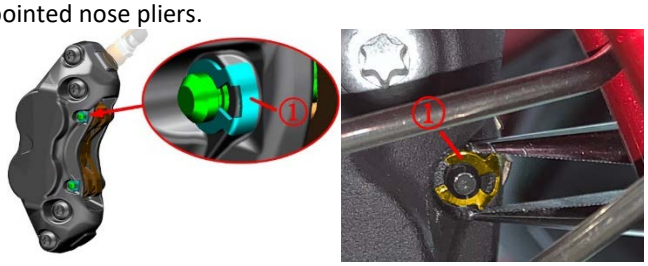

b. Remove the two pins ② with a T25 Allen torx wrench, and remove the shrapnel ③ and brake pad (1). Clean the outer edge of the piston and the pin shaft from foreign objects such as dust.

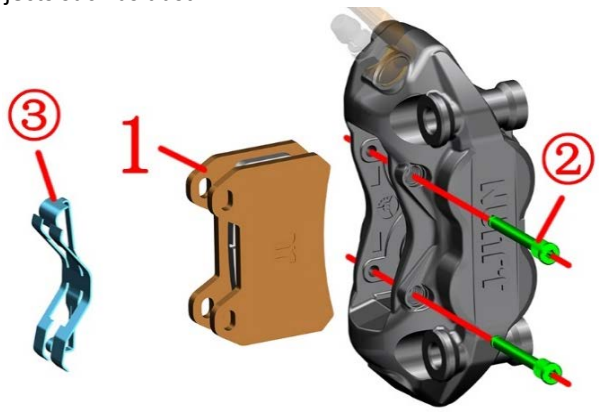

c. Use a Phillips screwdriver to remove the bolts ④, remove the upper cover ⑤, cover plate ⑥, and sealant gasket ⑦ on the front disc brake main pump assembly.

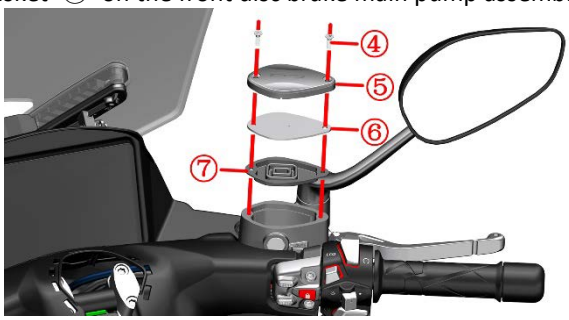

d. With the help of a tool, push the piston in the direction of the arrow to the end.



e. Restore the front disc brake main pump assembly and be sure to be accurately assembled in place.

f. Put the two brake pads (1) back into the caliper and the shrapnel ③ between the two brake pads. The arrow in the shrapnel should point up during assembly..

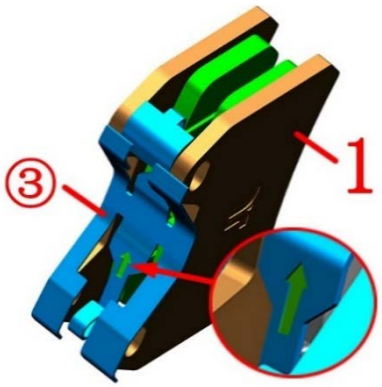

g. Press the blade pointed by the arrow ⑩ inward in the direction of the arrow with your hand, and insert the pin ② into the hole to secure the brake pad (1). Tighten the pin shaft with a T25 Allen torx wrench ②.



h. Press the blade pointed by the arrow ⑧ inward in the direction of the arrow with your hand, and insert the pin ② into the hole to secure the brake pad (1). Tighten the pin shaft with a T25 Allen torx wrench ②.

i. Attach the two circlips (1) back onto the pin shaft. The buckle snaps and fits. When assembling the circlip, it should be noted that the flange should face outward, and if the circlip is deformed, the hammer can be corrected with appropriate force.

j. Repeatedly pinch and release the brake handle to check whether the brake returns to normal hydraulic resistance.

D125/D125(2024)/D155

a. Use a flat-blade screwdriver to remove the nut①. Remove the pin shaft② with a 5# inner hexagon.

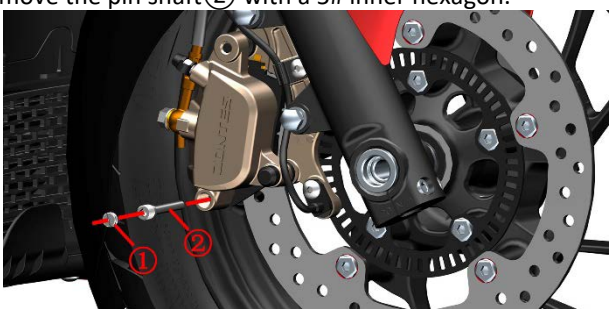

b. Remove the brake pads.

c. Push the piston to the end in the direction of the arrow with the help of a tool. If the resistance is high, you can refer to the method of adding brake fluid to the front brake main pump to remove the upper cover and then push. If the spring on the caliper falls off, it needs to be reinstalled in the direction shown in the figure.

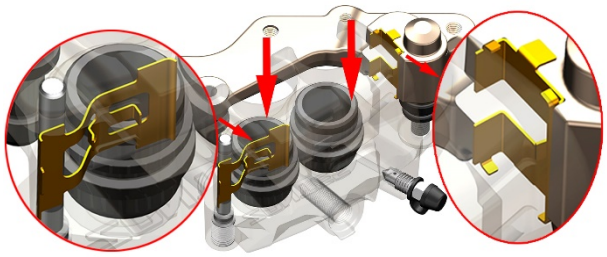

d. Take out the new brake pad and install it back. You need to hold the bottom of the brake pad (through hole end) with your hand. Be careful not to install it backwards, the side with 3 grooves faces the brake disc; the black metal back plate faces the caliper.



e. Observe from both sides whether the upper part of the brake pad has hit the shrapnel, otherwise the position needs to be readjusted.



f. After confirming that the upper part of the brake pad is assembled in place, insert the pin②, and lock it with a 5# inner hexagon.

g. Use a flat-blade screwdriver to put the nut① back and tighten it.

h. Repeatedly pinch and hold the brake handle to check whether the brake returns to normal hydraulic resistance.

5.2 Replace the rear brake pads

a. Use a flat-blade screwdriver to remove the nut①. Remove the pin shaft② with a 5# inner hexagon.

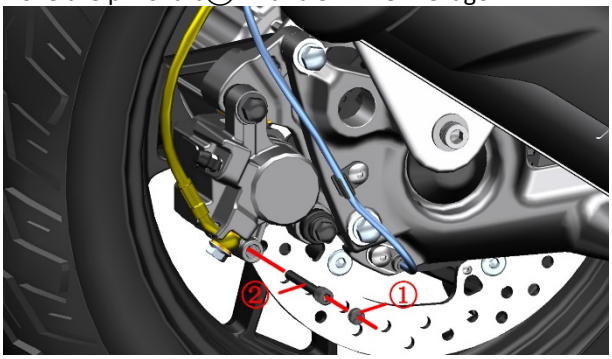

b. Use a 12# sleeve to remove the bolt③, turn the caliper assembly clockwise around the bolt④, and remove the brake pad. Note that the bolt④ does not need to be disassembled.

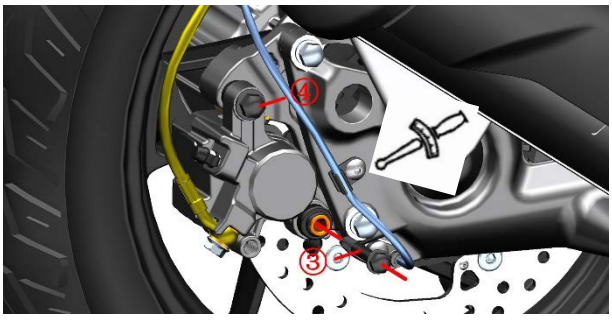

c. Push the piston to the end in the direction of the arrow with the help of a tool. If the resistance is high, you can refer to the method of adding brake fluid to the front brake main pump to remove the upper cover and then push. If the spring on the caliper falls off, it needs to be reinstalled in the direction shown in the figure.

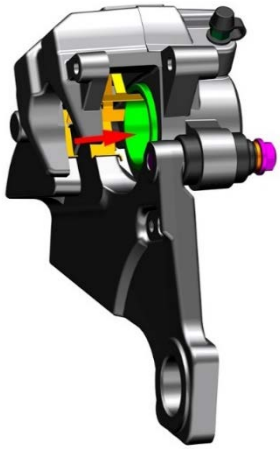

d. Grasp the outer brake pad with your left hand and insert the pin② with your right hand, being careful not to insert it to the end. Install the inner brake pad in place, then insert the pin to the end and use the 5# inner hexagonal lock pin②. Be careful not to install it backwards, the grooved side faces the brake disc; the black metal back plate faces the caliper.

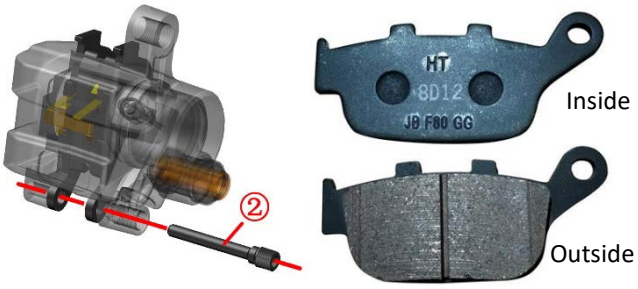

e. After adjusting the position of the brake pad, reinstall the bolt③ and lock it with a 12# sleeve. Standard torque: 24N.m (2.4 kgf.m, 18 lbf.ft).

f. Use a flat-blade screwdriver to put back the nut① and tighten it.

g. Repeatedly pinch and hold the brake handle to check whether the brake returns to normal hydraulic resistance.

5.3 Abnormal sound of brake pads

The main reasons for the abnormal noise of the brake pads are as follows:

a. The brake pad is worn to the limit. If it is a new brake pad, check whether there is any foreign matter caught between the brake disc and the brake pad. It can return to normal after replacing new brake pads or cleaning foreign objects.

b. Use non-original brake pads with too high hardness and replace them with original ones.

c. The brake disc bolts are loose, and the tightening bolts can be restored to normal.

d. Braking system failure, such as the caliper sliding shaft is not reset due to rust; the brake pads and spring pads are not installed correctly. Derust or re-assemble correctly.

e. The brake disc is out of tolerance, and it can be restored to normal by replacing the new brake disc.

6. Replace the brake disc

DANGER

●The vehicle must be parked on a flat and stable ground or a lifting platform.
●After replacing the brake discs, brake pads, or reassembling the front and rear wheels, the brake handle must be operated repeatedly until the brakes restore the braking effect.
●Contaminated disc brake discs and disc brake pads will reduce the braking effect. Please replace with new disc brake discs and clean the contaminated brake discs.

WARNING

●After disassembling the brake disc or rim assembly, please do not operate the brake handle.
●Check the new brake disc for run out ≤0.08mm (0.003 in) before assembling.

6.1 Replacing the front brake disc

The front brake disc can be removed by referring to the description of the steps for disassembling the front wheel assembly in the "Front Fork Assembly" of this manual.

6.2 Replacing the rear brake disc

a. First unplug the oxygen sensor and tighten the exhaust port nut (1) with 6# Allen; After holding the muffler, use 8# Allen to remove the bolt (2) connecting the muffler to the swingarm, remove the 2 pieces of ϕ10.5×ϕ24×2 gaskets, and remove the muffler assembly.
The models:

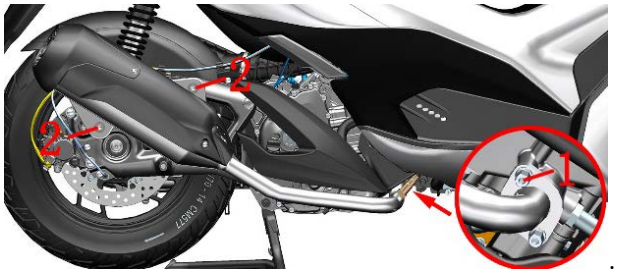

b. Remove the rubber cover then one person pinches the rear brake handle, and one person uses 21# sleeve + impact wrench to remove the rear wheel nut(3). Standard torque of nut(3): 125N.m (12.8 kgf.m, 92 lbf.ft).

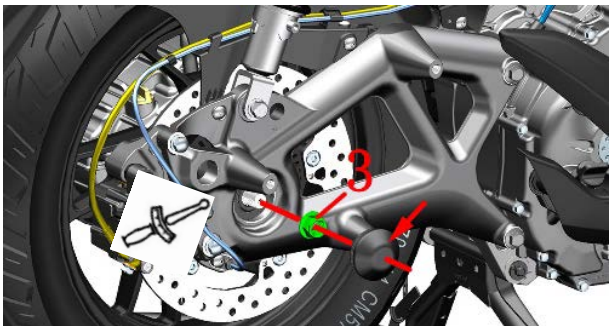

c.D350/D250:Use 4# hex socket to remove the M6×14 bolt (5) on the right middle of the rear inner mudguard, use 4# hex socket to remove the front M6×12 bolt(4) and the rear M6×14 bolt(5). Remove the two M6×12 bolts(4) at the bottom of the rear rocker arm, and remove the wheel speed sensor(6). Pull out the staples on the position indicated by the arrow and remove the decorative cover(7) of the engine right cover.

D125/D125(2024): After removing the water tank cover according to the previous steps, refer to D350 for maintenance.

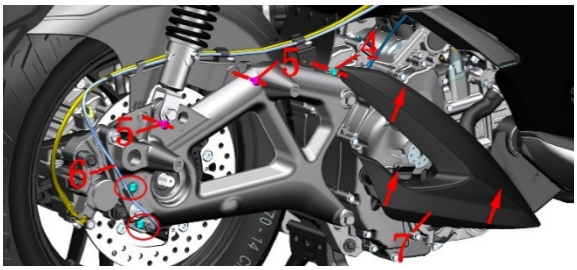

D350/D250

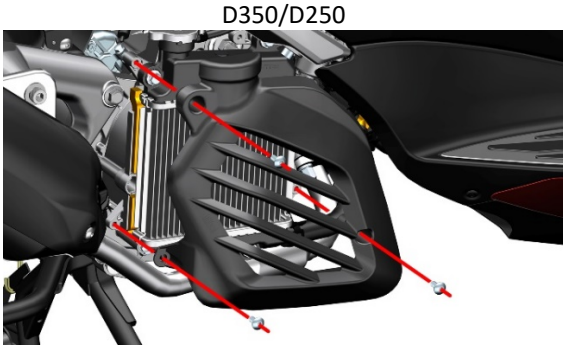

D125/125(2024)

d. In the gap between the left air filter and the rear inner mud board, hold the air filter housing with one hand, and press the rear inner mud board at the position 2 indicated by the arrows with the other hand. Separate the rear inner mud plate from the staples on the air filter and lift it up to facilitate subsequent removal of the rear rocker arm.

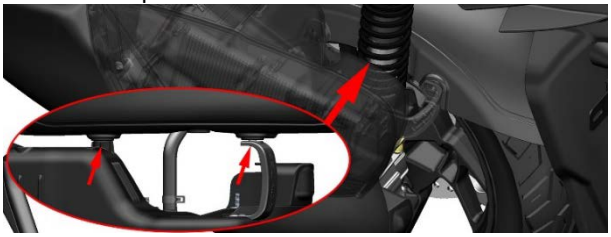

e. Use a 14# sleeve to remove the 2 bolts(10) that fix the rear brake caliper, and tie the caliper and the wheel speed sensor cable. Pay attention to let the calipers sag naturally without affecting the rocker arm after disassembly. Use a 14# sleeve to loosen the 2 bolts(8). Then use a 12# sleeve to remove the bolt(9) that fixes the rear shock absorber, and then remove the rear shock absorber and tie it. Grasp the rear rocker arm firmly with one hand, and remove the 2 bolts (8) with the other hand. Pull the rear rocker arm outwards and remove the rear rocker arm, paying attention not to omit the shaft sleeve(11) when reinstalling. Standard torque of bolt (8): 55N.m (5.6 kgf.m, 33 lbf.ft); bolt(9) and(10) are 24N.m (2.4 kgf.m, 18 lbf.ft).

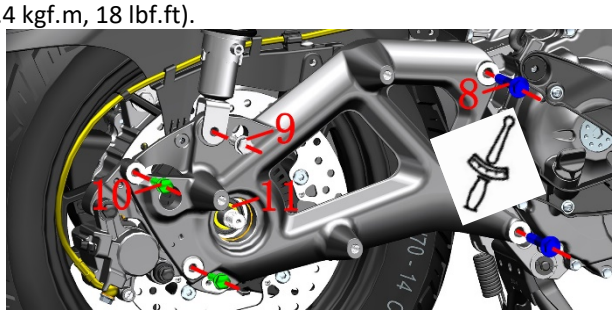

f. Remove the shaft sleeve(12) and take off the rear wheel assembly.



g. Replacing the rear brake disc

Remove the bolts with 6# Allen respectively, and remove the brake discs after that. If the ABS ring gear needs to be replaced, the bolt can be removed and replaced. If you need to replace the rear brake disc or the rear induction ring gear separately, you need to use a grinder to polish off the rivets and then separate. Note that the rivets need to be installed using special tools, and pay attention to the relative position of the assembly.

D350/D250



D125/D125(2024)/D155：



h.Refer to the order of disassembly to restore. Note that bolts with torque requirements need to be calibrated according to standard values.

Brake hose

Caution:

●This inspection should be completed by a qualified maintenance organization.

●Check the hhose according to the maintenance schedule.

●It is recommended to replace the brake hose every 4 years.

Refer to steps 1 and 2 of checking brake fittings in the brake system, you can use the endoscope with LED to easily check the oil pipe joints of the ABS hydraulic control unit and the main pump, or remove the corresponding cover for inspection.

Brake fluid

Caution:

●This inspection should be completed by a qualified maintenance organization.

●It is strictly forbidden to directly flush the main pump with high-pressure water.

●After disassembly, make sure that all parts are installed correctly.

●It is strictly forbidden to mix in water, dust, impurities and silicic acid or petroleum-based liquids, otherwise it will cause serious damage to the brake system.

●This vehicle uses DOT 4 brake fluid, and it is forbidden to mix it with other brake fluids.

●Wear protective gloves/protective clothing/protective goggles/protective masks.

●Brake fluid must be used in time after opening, seal and moisture-proof measures must be taken when storing; it is recommended not to exceed 1 month. Inferior or damp brake fluid will cause adverse effects on the brake system, and may cause brake failure when the impact is severe.

●The brake fluid should be prevented from dripping on the paint surface of the cover or the surface of the parts. If it is accidentally splashed, it should be rinsed with water immediately.

⚠DANGER

●If you accidentally swallow the brake fluid, you should contact the poison control center or hospital immediately; if you accidentally get the brake fluid into your eyes, rinse with water and seek medical attention immediately.

●Brake fluid must be kept away from children and pets.

●The vehicle must be parked on a flat and stable ground or a lifting platform.

1. Add brake fluid to the main pumps of the front and rear disc brakes

a. Adding brake fluid to the main pump of a disc brake is taken as an example for description. The steps for refilling the rear brake main pump are the same.

b. Place the vehicle horizontally.

c. Wrap around the main pump with oil-resistant plastic film to prevent the brake fluid from dripping onto the surface of the parts and damaging the paint layer.



d. After wearing waterproof gloves, use a Phillips screwdriver to remove the bolt①, and remove the upper cover②, the cover③, and the sealing rubber gasket④.

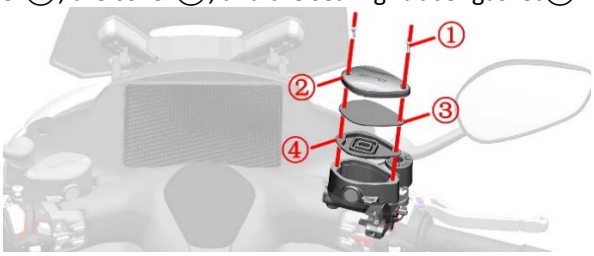

e. Use the brake fluid water content tester to measure the water content, if it is more than 2%, all brake fluid needs to be replaced; if it is less than or equal to 2%, add newly opened DOT 4 brake fluid to the transparent observation window of the front disc brake main pump 3/4 places. It is recommended that the water content should be less than 1.5%. Total TOTAL HBF 4 (DOT 4) brake fluid is added to this vehicle from the factory.



The above picture shows the brake fluid water content tester. The picture comes from the Internet and the copyright belongs to the author of the original picture. Do not use it for other purposes.

f. Reassembly can only be done after the foreign objects have been cleaned up.

2. Replace the brake fluid

Refer to the steps of adding brake fluid. If the measured water content is greater than 2%, the brake fluid needs to be replaced. this inspection should be done D350/D250:every 4000 kilometers (2485 mile) or every 15 months. It is recommended to replace the brake fluid every 2 years. D125/D125(2024)/D155:every 4000 kilometers (2485 mile) or every 6 months. It is recommended to replace the brake fluid every 2 years. If the brake fluid is not replaced for a long time, flocs will form to block the oil pipe, the oil hole of the main pump of the disc brake or the piston will become stuck, which will cause the braking effect to deteriorate or fail, which will affect driving safety.

2.1 Replace the front brake brake fluid

a. Wrap around the front brake main pump with oil-resistant plastic film, as shown in the previous section.

b. Pull out the rubber cap of the vent nozzle①, and put on 8# torx wrench. Use a 6mm (0.23 in) hose to fit the vent②, being careful not to remove the torx wrench.

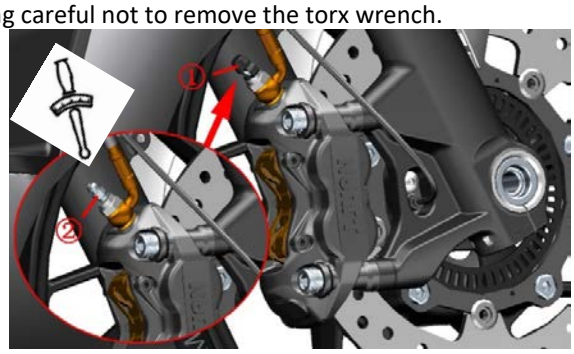

D350/D250



D125/D125(2024)/D155

c. Put the other end of the hose into the oil pot.

d. Remove the upper cover of the front brake main pump referring to the previous step of adding brake fluid.

e. Rotate the 8# torx wrench with the right hand counterclockwise to loosen the air nozzle, and with the left hand, slowly and uniformly squeeze the front brake handle to the end and keep it still. Lock the vent nozzle clockwise and slowly loosen the handle. Pay close attention to the liquid level of the front brake main pump. When it is too low, add it in time to prevent air bubbles from entering the brake hose. Repeat the previous steps until the transparent and clean light yellow brake fluid comes out.



f. Observe whether the liquid level of the main pump is at 3/4 of the transparent inspection, if it is not necessary to add or withdraw or discharge with a syringe.

g. After the brake fluid is replaced, unplug the 6mm (0.23 in) hose; use a torque wrench to tighten the bleed nozzle to the standard torque: 10N.m (1 kgf.m, 7 lbf.ft). Then put the rubber cap on the air nozzle.

h. Reinstall the upper cover of the main pump.

i. Repeatedly pinch and hold the brake handle to check whether the brake returns to normal hydraulic resistance.

⚠WARNING

●The discharged brake fluid needs to be properly disposed of, and it is forbidden to continue to use it. It is forbidden to dump at will to pollute the environment; or put it at will, etc. It should be handed over to a qualified recycling unit for proper disposal.

●The steps of discharging brake fluid must be strictly performed without confusion; avoid air bubbles from entering the brake pipeline.

●When pinching the brake handle, it must be slow and uniform to avoid air bubbles from entering the brake pipeline.

●The vent nozzle must be locked in place before the brake handle can be released. Half-locking is forbidden; and do not use excessive force.

2.2 Replace the rear brake fluid

Refer to the steps for replacing the front brake brake fluid to replace the rear one.

3. Brake system exhaust

If the hand feel soft when the brake handle is squeezed and the braking performance is significantly reduced, first check whether the brake fluid level of the main pump is lower than the "LOW" line and whether the brake system is leaking. If the problem still exists after excluding the above two items, you can try the exhaust operation. The exhaust operation is similar to the previous operation of replacing the brake fluid. When replacing the brake fluid, a clean and transparent light yellow brake fluid must flow steadily, while the exhaust operation will flow out foamy brake fluid.

After exhausting, check whether the brake fluid level of the main pump meets the standard.

⚠WARNING

●The discharged brake fluid needs to be properly disposed of, and it is forbidden to continue to use it. It is forbidden to dump at will to pollute the environment; or put it at will, etc. It should be handed over to a qualified recycling unit for proper disposal.

● Pay close attention to the liquid level in the main pump during operation, and replenish it in time to prevent air from entering the brake hose.

Tire

⚠DANGER

●Check the tire condition and tire pressure before driving.

●When the tire is worn to the limit or there are cracks or wounds on the surface, it should be replaced in time.

●Pay special attention to driving safety when using new tires. New tires that have not run in well may slip and cause the vehicle to lose control.

●Avoid sudden acceleration, sharp turns, emergency braking, etc. within 150 kilometers (93mile) after replacing the new tire.

●D350/D250 the standard front wheel of this vehicle is 120/70-15, and the rear tire is 140/70-14.
D125/D125(2024)/D155 the standard front wheel of this vehicle is 100/80-14, and the rear tire is 120/70-14.When replacing tires, you should replace standard tires. Use of non-standard tires may cause problems.

●It is not recommended to use external repair to repair the tire, the tire needs to be removed for internal repair. Temporary emergency can use external compensation, but the vehicle should be driven at a lower speed, and internal compensation should be made to the maintenance organization as soon as possible. If the sidewall is bumped, punctured, scratched, or if the tread is damaged and the hole is large, it should be replaced directly. Rebalance should be done after Tyre repair.

⚠WARNING

●Check the tire pressure regularly. D350/D250 the standard is 240kPa (2.5 kgf/cm2, 35 PSI) under normal temperature conditions. ,rear tire is 260kPa (2.75 kgf/cm2, 39 PSI). D125/D125(2024)/D155 front tire is 220kPa(2.2 kgf/cm^2， 32 PSI),rear tire is 270kPa (2.75 kgf/cm2, 39 PSI). The maximum tire pressure in the cold state shall not exceed 300 kPa (3.1 kgf/cm2, 44 PSI).
●When the tire pressure is found to drop, check whether the tire has nails or small holes; whether there is a collision on the side of the rim that causes deformation or cracks.
●Be careful to avoid the position of the valve when removing the tire with the tyre raking machine. Pay attention to protect the contact part of the rim and the bead, if it is scratched, it may cause air leakage.
●The tire pressure is too high, which reduces the contact area with the ground. It is also more likely to cause a puncture in the summer.Too low will cause difficult steering, accelerate wear and increase engine load and increase fuel consumption.
●Frequent exposure to the sun can cause tire cracks and aging. It is recommended to park the vehicle in a dust-proof, sun-proof, and ventilated place; or cover it with a car jacket to protect the body parts and the tires better. If you do not drive for a long time, you should support the vehicle firmly and let the tires hang in the air to avoid deformation caused by long-term load on the ground contact.
●Because the tire self-refilling may block the air hole of the tire pressure monitoring sensor, causing difficulty in inflation or failure of the tire pressure monitoring, it should not be used.

1. Check the tires

a. Park the vehicle on a flat and stable ground or a lifting platform, and put down the main support.



b. Support the front wheel with suitable tools, let the front tire hang in the air, and then rotate the tire to carefully check for abnormalities, such as partial wear, studs, cracks, etc. Clean up the pebbles or other foreign objects embedded in the tread pattern. Check whether the tread and sidewall have worn to the mark. If they are close to or have worn to the mark, replace with a new tire of the same specification in time. Use a tire pressure gauge to measure the tire pressure when the tire is cold, and add or deflate to the standard pressure.

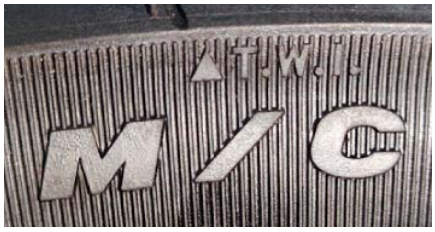

b. The height of the wear mark on the tread protrusion is 1.6mm (0.06 in). The triangle (△T.W.I.) mark on the sidewall indicates the location of the wear bar. If the wear reaches the mark point, it means that it has been worn to the limit. If you continue to drive, there will be a safety hazard. You must replace with new tires of the same specification.

c. The inspection of the rear tires is the same as that of the front tires and will not be repeated here.

2. Replace tires

a. Replace the front tire

The front wheel assembly can be removed by referring to the description of the steps for disassembling the front wheel assembly in the "Front Fork Assembly" of this manual. Use a tyre picker to remove the tire. When disassembling, pay attention to avoiding the valve position. Do not use a crowbar to pry the tire at the valve position to avoid damage to the tire pressure sensor. Before pressing the tire, install it according to the direction of rotation indicated by the sidewall, and aim the light point with the yellow mark at the position of the valve. After replacing a new tire or repairing a tire, the dynamic balance needs to be re-balanced to prevent the front wheel from shaking due to unbalance and affecting the driving experience



b. Replace the rear tire

Refer to the previous operation of replacing the rear brake disc to remove the rear wheel assembly. Other operations are similar to the replacement of the front tires, and will not be repeated here.

Steering mechanism

Caution:

●Regularly inspect the steering mechanism according to the requirements of the regular maintenance table.
●Park the vehicle on a flat and stable ground or a lifting platform, and put down the main support.
●Too small steering mechanism clearance will cause inflexible steering and accelerate bearing wear. When it is too large, it will cause driving jitter and abnormal noise when braking.

1. Check the steering mechanism

a. Support the front wheel with a suitable tool so that the front tire is hung in the air and then rotate the direction handle left and right to confirm whether the rotation is

flexible and smooth; whether the cable and cable show signs of being pulled.

b. Keep the front wheel suspended, shake the front wheel assembly in multiple directions, to confirm whether the front fork assembly is axially strung or loosened in the radial direction.



2. Adjust the steering mechanism

D350/D250/D368

If the steering is not flexible or loose, the axial bearing clearance should be adjusted.

a. Refer to this manual, Front Fork Assembly, to remove the front panel. Remove and remove the faucet lock. Remove the two bolts of the upper plate.

Remove the nut (1) counterclockwise with the 30# sleeve and remove the spacer (2).

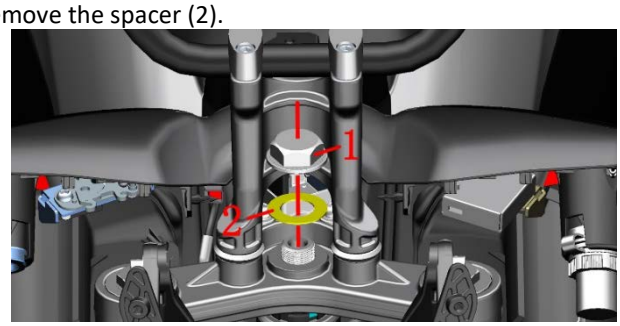

b. Other components are omitted here for ease of explanation. Move the washer (3) upwards and loosen the adjusting nut (4A) with a 38-42 hook wrench within 6mm (0.24 in); Finally loosen the adjusting nut (4b). Pull out the directional handle and uplink plate assembly. If it is difficult to pull out, you can use a flat screwdriver to pry the upper plate slotted slightly and then pull it out at the same time. Move the orientation handle and the uplink plate assembly away and place it.

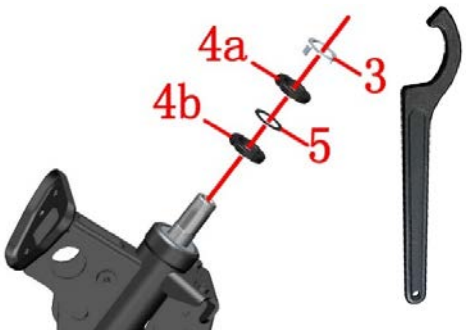

c. Screw the adjusting nut (4b) clockwise to 50N.m (5.1 kgf.m, 37 lbf.ft), turn the front of the car to feel tight to normal, loosen 1/4 turn counterclockwise, and screw clockwise again to 15N.m (1.2kgf.m, 11 lbf.ft). Continue to turn the front of the car, slightly tight or slightly loose, then fine-tune about 1/6 turn.

d. After adjustment, confirm that the steering is restored, and if normal, rotate the nut (4A) clockwise to contact the rubber pad (5) and align the locker (3) with the groove of the nut (4B). Install the spacer (2) and tighten the nut (1). The nut (1) has a torque of 100 N.m (10.2 kgf.m, 74 lbf.ft).

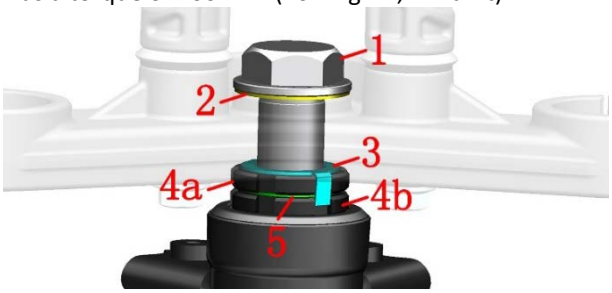

e. The front wheel is hung in the air to straighten the direction handle, and gently push and pull the direction handle by hand to feel whether the steering mechanism is smooth and free of jams. When the front fork assembly is slightly tilted to one side, it should be able to slowly deflect to the end under its own weight. If it is quickly to the end, it needs to be readjusted.

D125/D125(2024)/D155

If the steering is not flexible or loose, the axial bearing clearance should be adjusted.

Refer to the steps to remove the faucet lock in the section "Replace the lower link plate" in the "Front Fork Assembly" of this manual. Remove the faucet lock.



b. For the convenience of explanation, other parts are hidden here. First use a 38-42 hook wrench with a thickness of 6mm (0.24 in) to loosen the adjusting nut (1a); move the lock washer(2) up and then loosen the adjusting nut (1b).

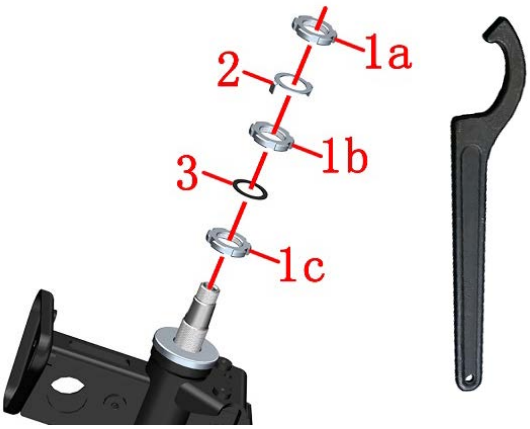

c. If the steering is heavy, loosen the adjusting nut (1c) counterclockwise. First screw it clockwise to 35N.m (3.6 kgf.m, 26 lbf.ft), then loosen 1/4 turn counterclockwise, and then screw it to D125:15N.m (1.5 kgf.m, 11 lbf.ft)/D125(2024):13N.m (1.3 kgf.m, 10 lbf.ft).

d. If thre is any looseness, screw it clockwise to 35N.m (3.6 kgf.m, 26 lbf.ft), then loosen it counterclockwise by 1/4 turn, and then screw it to D125:15N.m (1.5 kgf.m, 11 lbf. ft) /D125(2024):13N.m (1.3 kgf.m, 10 lbf.ft)..

e. After adjustment, confirm whether the steering is restored. If it returns to normal, turn the nut (1b) clockwise to touch the rubber pad (3) and align the lock washer (2) with the groove of the nut (1b) and (1c). Tighten the nut (1a) to D125:100N.m (10.2 kgf.m, 74 lbf.ft)/D125(2024):. 100N.m (80.2 kgf.m, 59 lbf.ft)

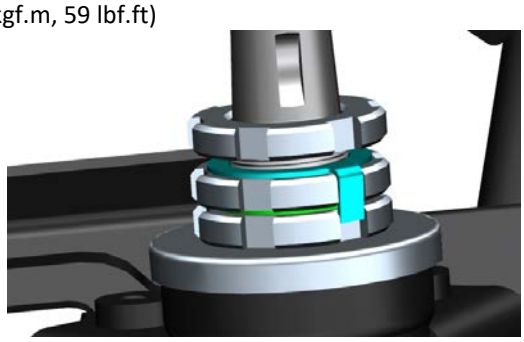

f. The front wheel is hung in the air to straighten the direction handle, and gently push and pull the direction handle by hand to feel whether the steering mechanism is smooth and free of jams. When the front fork assembly is slightly tilted to one side, it should be able to slowly deflect to the end under its own weight. If it is quickly to the end, it needs to be readjusted.

3. Maintain steering bearings

If adjusting the steering bearing clearance cannot be restored, you need to remove the steering bearing to check whether the bearing, steel bowl is worn or rusted, lacks grease, etc.

4. Malfunction

Normally rotate the handle, if it feels more laborious, you need to investigate the following reasons:

a. Whether the steering mechanism is too tight, refer to the previous steps to adjust the steering mechanism to solve;

b. The steering mechanism bearing is rusty, the steel bowl or steel ball is damaged, and it needs to be disassembled and replaced;

c. The front tire pressure is insufficient and needs to be charged to the standard tire pressure, D350 is 240kPa (2.5 kgf/cm2, 35 PSI), D125/D125(2024)/D155 front tire is 220kPa (2.2 kgf/cm2,32 PSI), under normal temperature conditions;

d. The column of the lower link plate is deformed and needs to be removed and replaced.

Front fork

Caution:

●The models every 8000km (4971 mile), check whether the front fork is leaking or deformed, and whether the shock absorption and rebound are normal.

●Before riding each time, check whether there is leakage in the front shock absorber and whether the fasteners are loose to ensure driving safety.

● Bolt torque at the hollow shaft of the front wheel of the shock-absorbing bottom cylinder: 20N.m (2.0 kgf.m, 15 lbf. ft).

●When replacing hydraulic oil, use kerosene or diesel to thoroughly clean all parts. Use a graduated cylinder to measure 10W hydraulic oil is poured in one time, avoid mixing different hydraulic oils.D350 measure 497±5ml (16.8±0.17 US oz, 17.5±0.18 lmp oz, 3.3±0.3 cu-in). D350(2023)/D250 measure 386±5ml (13±0.17 US oz, 13.5±0.18 lmp oz, 23.5±0.3 cu-in). D125/D125(2024)/D155 measure 150±2ml (5.07±0.07 US oz, 5.28±0.07 lmp oz, 9.15±0.1 cu-in).

●After traveling on dusty or muddy roads, you should clean up the foreign matter on the front fork tube (exposed chrome-plated cylinder) in time to avoid scratching the dust seal or oil seal and causing leakage; wipe it clean with a soft cloth.

●Do not use a high-pressure water gun to directly flush against the dust seal at close range.

●The vehicle should be parked in a ventilated and dry environment without driving for a long time. A dark and humid environment can easily cause the front fork tube to rust and make other parts of the vehicle rust. Coastal areas should have more frequent pre-maintenance damping than inland areas. After wiping clean, spray a small amount of anti-rust oil to prevent rust.

1. Check the appearance

a. After parking the vehicle firmly, let the front wheel hang in the air, and turn the direction knob to observe whether the front shock absorber is leaking; whether there are scratches, pits, rust, etc. on the surface of the front fork tube. Shallow scratches, small pits, and slight rust can be smoothed with fine sandpaper of about 2000 mesh. Wipe clean the dust or foreign objects in the dust-proof seal. If there has a dust cover, it should be moved away before inspection.



b. Check whether the bottom tube is painted off; whether the installation points of the front fender, the front wheel hollow shaft and the front brake caliper are broken or cracked. Check if there is any leakage at the bottom of the bottom cylinder.



c. If there is a large amount of hydraulic oil attached to the front fork tube, wipe it clean and observe after riding. If there is no oil stain or slight oil stain, it is the hydraulic oil accumulated during the assembly of the dust seal, and it can be judged that the oil seal is not leaking. If there is a small amount of oil stains or sludge mixture, remove the dust seal and wipe clean the front fork tube and oil seal surface, first compress the front shock absorber and then wipe clean and

then press; repeat the above operation 10 times. Observe whether there is still on the front fork tube. If there is, the front shock absorber leaking oil needs to be replaced with the dust seal and oil seal. If not, it is a normal phenomenon that a small amount of hydraulic oil has accumulated during assembly.

d. Check whether there is any leakage at the bottom of the bottom cylinder with the help of a mirror or mobile phone lens. If there is a slight leakage, first check whether the bolts are loose. The bolt torque here is 20～26N.m (2～2.7 kgf.m, 15～19 lbf). ft). If there is still leakage after tightening, the gasket should be replaced.



2. Check the shock absorption performance

Pinch the front brake handle and press down forcefully. After releasing it, it should be able to compress smoothly and then return to normal. Repeat the operation several times to check. If there is a block, the shock absorber needs to be removed for investigation. If there is a collision with the front wheel or a high-speed bump, check whether the shock absorber is deformed. Check the shock absorption performance according to the maintenance schedule. It is necessary to prevent the vehicle from turning over during operation.

3. Remove the front shock absorption

Remove the front shock absorber according to the steps of removing the front shock absorber in the "Front Fork Assembly" of this manual.

4. Correct the front fork tube

If the front wheel of the vehicle passes a hurdle at a high speed or after a collision, check whether the front fork tube is deformed. Take the left shock absorption as an example. Use the end face of the front axle of the shock absorber bottom tube and the end face of the front fender mounting point to fix the shock absorber; or remove the front fork tube. Use a dial indicator to detect the amount of deformation in the axial direction of the front fork tube, and rotate the front fork tube to measure different positions.

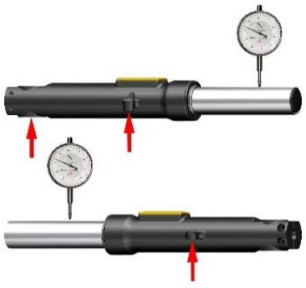

For slight deformation of less than 0.2mm (0.008 in), the front fork tube can be supported by a V-shaped iron block, and soft rubber, rubber, copper, etc. should be placed on the contact surface to prevent the front fork tube from being scratched. Use the press slowly and slightly, straighten the pressure and small stroke several times, and measure while straightening. The radial run out after correction should be less than 0.05mm (0.002 in). If the original bending deformation part is out of round after correction, it should be replaced. If the deformation is too large, the shock absorption should be replaced.



5. Troubleshooting

a. There is obvious impact noise when driving on uneven roads or emergency braking. The following items need to be checked:

Whether the spring of the shock absorber is broken or the elasticity drops;

Whether the hydraulic oil is insufficient or enters the air;

Whether there is too much hydraulic oil;

Whether the spring is axially bent and rubs against the front fork tube.

b. The following items should be checked for excellent shock absorption:

Whether there is too much hydraulic oil;

Whether the front fork tube is bent or deformed;

Has the spring been modified?

c. If the shock absorption is too soft, check the following items:

Whether the hydraulic oil with low viscosity is changed;

Whether the spring force drops;

Is there too little hydraulic oil.

Rear shock absorption

Caution:

●If the rear shock absorber has a lot of mud and sand, it should be cleaned in time to prevent soft and big stones from scratching the chromed parts and causing rust.

●Non-professionals should not disassemble the rear shock absorber by themselves.

●It should be maintained according to the regular maintenance table.

1. Check

a. One person straightens the vehicle and stabilizes the vehicle, and one person presses the rear armrest behind to observe whether the rear shock absorber can recover smoothly.

b. Check whether the shock-absorbing bolts are loose.

c. Grasp the upper part of the damping spring and rotate it in the radial direction. It should be able to rotate in a small amount. Check the bottom in the same way. If the upper part

cannot be rotated, the shock-absorbing rubber buffer sleeve has aged and failed; if the bottom cannot be moved, the buffer sleeve on the rear rocker arm and the engine box has failed and needs to be replaced.

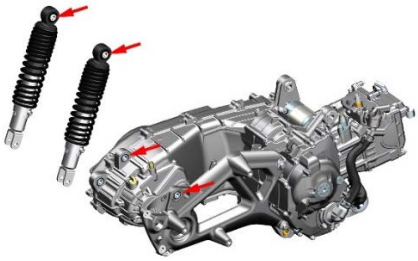

d. Check whether the weld at the bottom of the shock absorber is leaking.

2. Adjust the preload

The rear shock absorption of this vehicle can be adjusted according to the needs of the owner. Sort 1-5 levels, level 1 is the softest, level 5 is the hardest, and the factory defaults to level 2. Turning the compression spring preload length to the H direction makes the shock absorption harder; otherwise, the shock absorber becomes softer. The two rear shock absorbers need to be adjusted to the same gear.

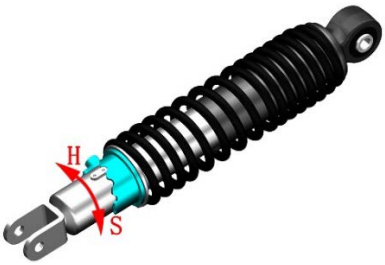

2.1 Adjust the right rear shock absorption

D125/D125(2024)/D155

Use the 5# inner hexagon to insert into the hole of the right rear shock absorber adjuster, and rotate to the required gear in the direction of the arrow.

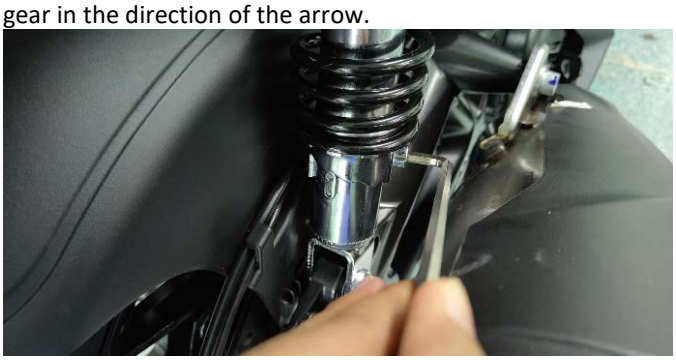

D350/D250/D368

Use the adjustment wrench provided with the vehicle.



2.2 Adjust the left rear shock absorption

Use the 5# inner hexagon to insert into the hole of the left rear shock absorber adjuster, and rotate to the required gear in the direction of the arrow.

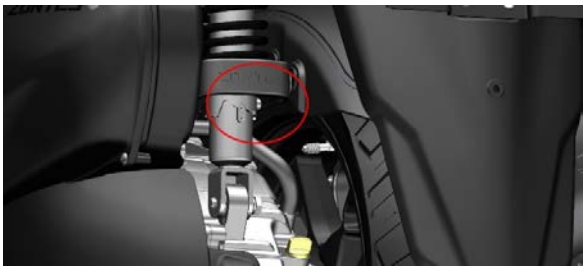

3. Replace the shock absorption

The procedure for disassembling D125/D125(2024)/D155/D250 and D350 is the same

a. Remove the muffler assembly.

Remove the rear storage box by referring to steps a to c of "Removing the Stepper Motor and Cleaning Carbon Deposits" in the throttle valve body.Refer to the steps in "Add coolant to the main water tank" in the radiator to remove the right side cover and the steps in "Remove the spark plug" in the spark plug to remove the left side cover, as shown in the figure below.



b. Remove the bolt decoration buckle (2) on the bolt and remove 6 bolts (1) of M6×12 using 4# Allen; Use the 12# sleeve to remove 5 bolts of M8×25 (4); Use 4# Allen to remove one M6×14 shoulder bolt (3) at the connection between the middle of the tail skirt and the rear armrest; Grasp the rear armrest anywhere with both hands, lift the rear armrest up in the direction of the arrow, and remove the rear armrest.

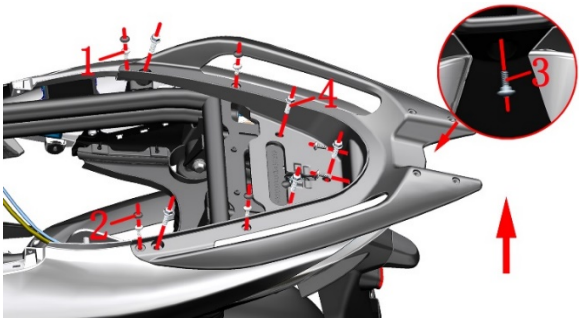

c. Remove the two expansion nails and two bolts (5) at the connection between the left and right parts of the fuel tank cover plate and the tail group, and remove the bushing (6) and buffer glue (7).

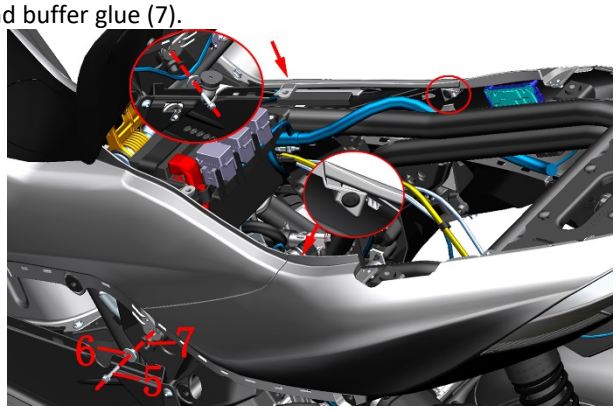

d. Press down the central cylindrical pin of 8 expansion nails with 4 # hexagonal socket, then take down the expansion nails, and take down the left and right parts, middle parts and left and right tail lights (blue part) of the rear tail group.

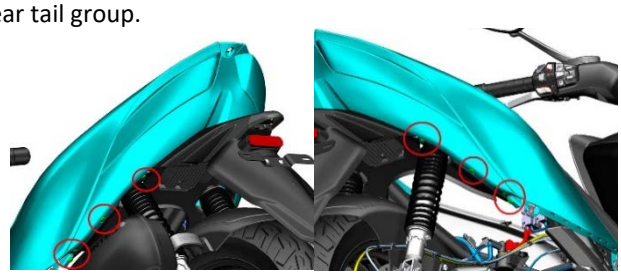

e. Pull the front of the rear mud pan downward, fix the nut (8) with a 14 # socket, completely loosen the bolt (9) with a 14 # ratchet wrench on the inside, and remove the nut (8). Be careful not to remove the bolt (9) first. Remove the nut (8) on the other side in the same way. Torque standard of nut (8): 30N. m (3.1 kgf. m, 22 lbf. ft).



f. Grasp the rear right shock absorber and remove the bolt (10) with a 16 # socket or ratchet wrench, then remove the bolt (9) and replace the rear right shock absorber. When replacing the shock absorber, replace one side of the shock absorber before replacing the other side. On the left side, use a 16 # ratchet wrench to remove the bolt (10). Standard torque of bolt (10): 24N. m (2.4 kgf. m, 18 lbf. ft).

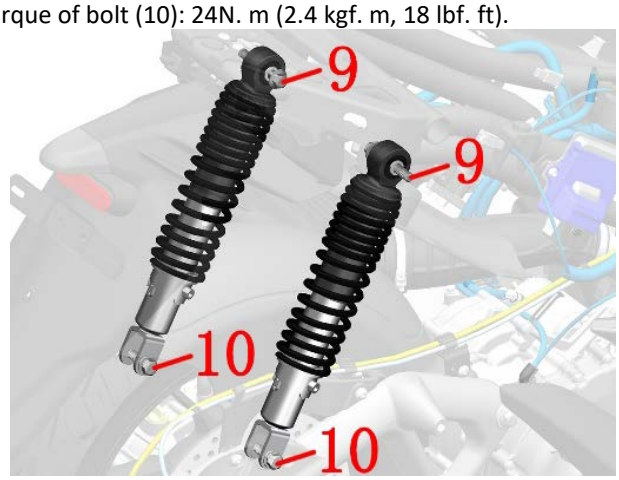

Bolts and nuts for body and engine installation

Caution:

●Regularly check the body fasteners according to the maintenance schedule.

●Loose engine fasteners will increase the vibration and affect the driving experience.

●The procedure for disassembling D125/D125(2024)/D155/D250 and D350 is the same

1. Check the fasteners for the critical parts

Check whether the front disc brake caliper bolts, front shock absorber bottom cylinder bolts, lower link plate bolts, rear rocker arm and engine connecting bolts, rear wheel spline shaft nuts, rear disc brake caliper bolts, and side bracket nuts are loose. Check whether the Split pin of the main bracket shaft is abnormal.



2. Check engine fasteners D350/D368

Standard torque of 5 M12 nuts of engine cradle: 65N.m (6.6 kgf.m, 48 lbf.ft).

a. Refer to the steps for removing the rear storage box and tail skirt to remove it to the extent shown in the figure.



b. Check if the four nuts on the rear cradle of the fixed engine as shown in the figure are loose. The nut on the right front part (a in the figure) needs to be pulled out or pulled out of the high-pressure oil pipe and cable connector to facilitate tightening with tools.

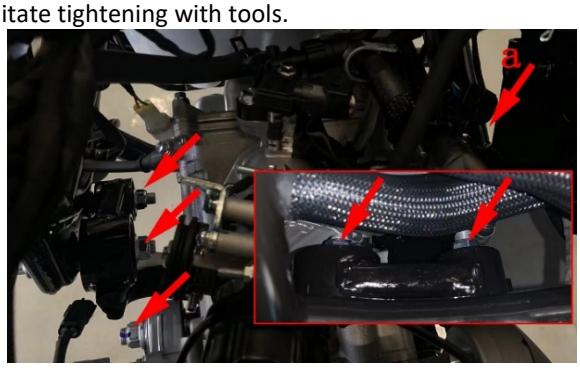

c. Check whether the engine nut is loose.



D125

Standard torque of 5 M12 nuts of engine cradle: 65N.m (6.6 kgf.m, 48 lbf.ft).

a. Refer to the steps for removing the rear storage box and tail skirt to remove it to the extent shown in the figure.



b. Check if the four nuts on the rear cradle of the fixed engine as shown in the figure are loose.

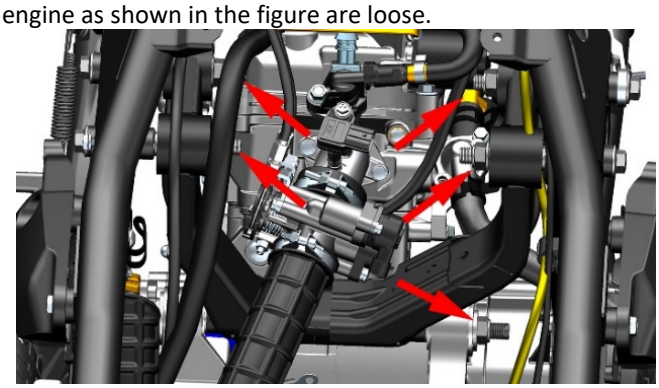

c. Check whether the engine nut is loose.

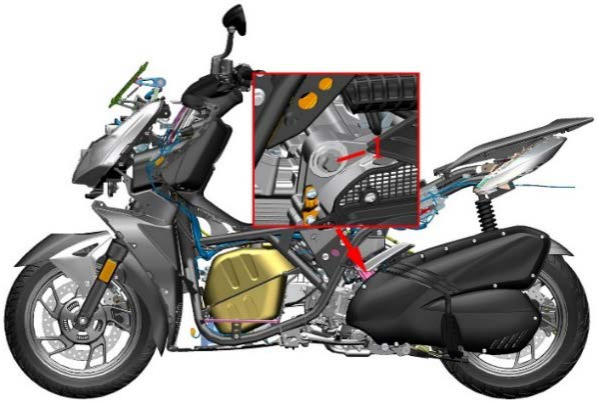

D350(2023)/D250

Standard torque of 5 M12 nuts of engine cradle: 65N.m (6.6 kgf.m, 48 lbf.ft).

a. Refer to the steps for removing the rear storage box and tail skirt to remove it to the extent shown in the figure.



b. Check if the four nuts on the rear cradle of the fixed engine as shown in the figure are loose. The nut on the right front part (a in the figure) needs to be pulled out or pulled out of the high-pressure oil pipe and cable connector to facilitate tightening with tools.

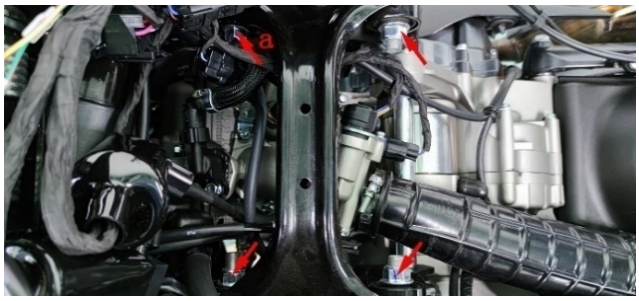

c. Check whether the engine nut is loose.



D125(2024)/D155

Standard torque of 5 M12 nuts of engine cradle: 65N.m (6.6 kgf.m, 48 lbf.ft).

a. Refer to the steps for removing the rear storage box and tail skirt to remove it to the extent shown in the figure.



b. Check if the four nuts on the rear cradle of the fixed engine as shown in the figure are loose.

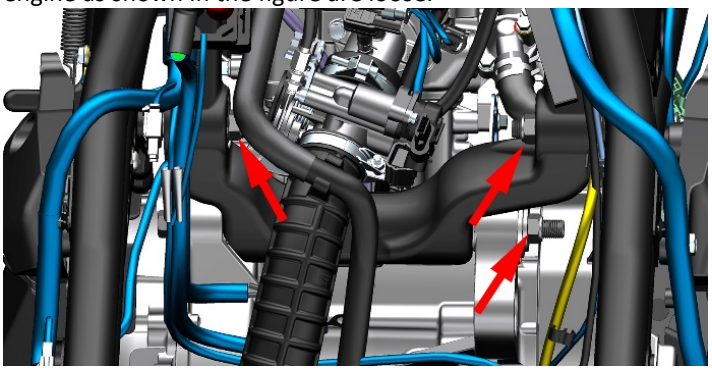

c. Check whether the engine nut is loose.

Side bracket

Caution:

●Park the vehicle on a flat and stable ground or a lifting platform, and put down the main support.

●When disassembling and installing the spring, it is necessary to prevent the spring from flying off suddenly and causing personal injury.

1. Check

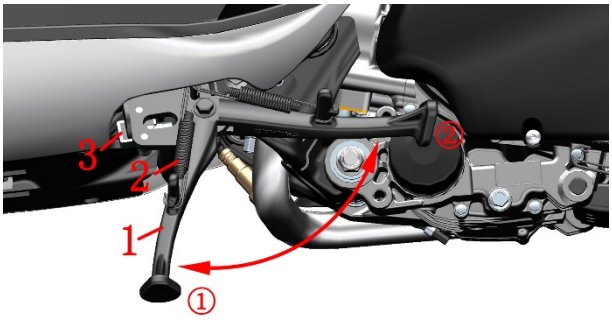

1. Side bracket 2. Side bracket spring 3. Side bracket flameout switch
①Parking position②Driving position

a. Check whether the side bracket spring is damaged and whether the elastic force is normal.

b. Check whether the side bracket rotates normally. Turning to the angle shown in Figure 1 should be able to automatically turn to the parking space under the spring force; when the angle in Figure 2 is turned to the parking space automatically. If necessary, remove the side bracket for lubrication.

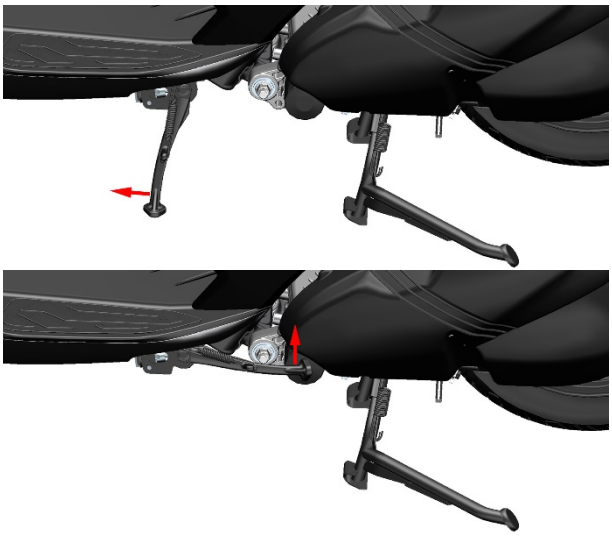

c. Check whether the flameout switch function is normal.

The vehicle should not be started when the side bracket is lowered (parking position); the vehicle cannot be started when the side bracket is retracted (driving position) without pinching the front or rear brake handle; After starting the vehicle, put down the side brackets, and the flame should be automatically turned off, otherwise it is necessary to troubleshoot the flameout switch or brake switch failure.

d. Check whether the side bracket mounting plate is deformed or cracked.

2. Lubrication

a. Put away the side bracket so that the spring is in the shortest position for easy disassembly.

b. The thick steel wire can be rolled into a circle and put into the spring(1) pull hook. Pay attention to ensure that the steel wire cannot loose or fall apart during the pulling process.



c. Grasp the side bracket with one hand, and pull it in the direction of the arrow with the other hand to remove the spring.

d. Put down the side bracket, and use a 14# sleeve or torx wrench to remove the nut(2) counterclockwise. After holding the side bracket firmly, use a 14# sleeve to remove the bolt(3) counterclockwise, and take off the side bracket.

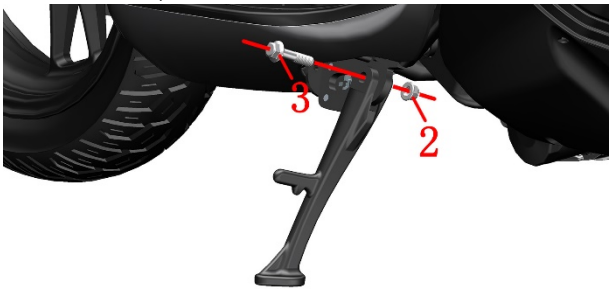

e. Remove the side bracket bushing(4) from the frame.

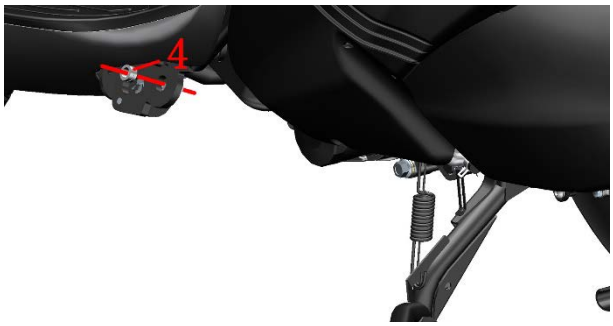

f. Use diesel or kerosene, or a clean cloth to wipe off the remaining grease. Apply a proper amount of grease to the two installation planes inside the side bracket and the surface that matches the flameout switch, and try not to apply it to the threaded holes.

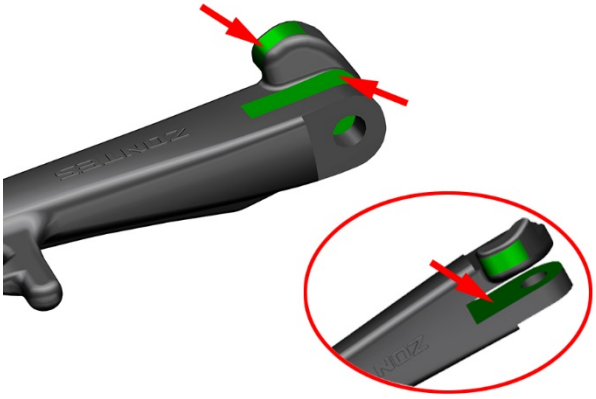

Main bracket

Caution:

●Park the vehicle on a flat and stable ground or a lifting platform, and put down the side brackets.

●When disassembling and installing the spring, it is necessary to prevent the spring from flying off suddenly and causing personal injury.

1. Check

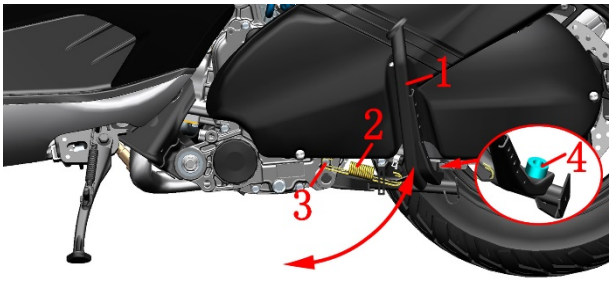

1. Main support 2. Main support spring 3. Main support return spring post 4. Cushioning glue

a. Right the vehicle, step on the effort-saving lever of the main support with your foot, and check whether the spring force is normal. The main support should be able to quickly return to the driving position under the elastic force of the spring itself.

b. Check whether the buffer glue is aging or not.

c. Check whether the return spring post of the main support is deformed.

d. Check whether the main bracket has obvious deformation and whether the welding part is cracked.

2. Lubrication

a. Keep the main bracket in the retracted position, on right side, use pliers to remove the split pin(1) in the direction of the arrow, and remove the gasket(2). Knock out the main support shaft (3) from right to left. Pay attention to the protection measures at the spring of the main support to prevent the spring of the main support from suddenly loosening and flying out and causing personal injury. It can be covered by a hard object, or the spring can be tied up with a rope or thin iron wire.

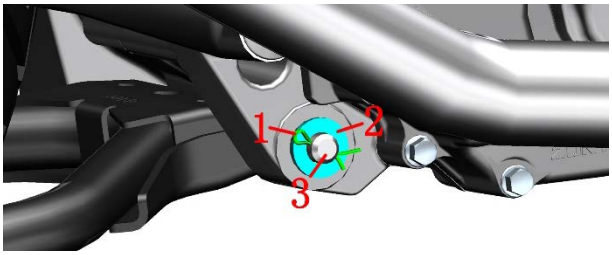

b. Remove the spring from the main support.

c. Apply a proper amount of grease to the end face, inner hole of the engine box bushing and the surface of the main support shaft.

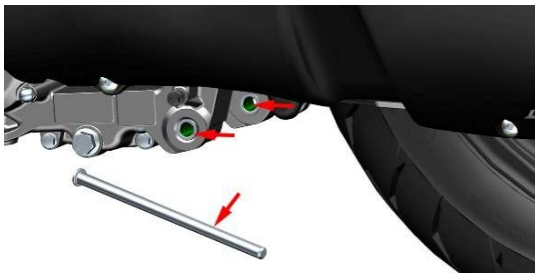

3. Install the main bracket

After aligning the main bracket with the mounting holes, insert the main bracket shaft from the left. After inserting the gasket, Insert the split pin, then bend the split pin on both feet to prevent them from falling off.

Hang the main support spring on the main support first, and then use a Phillips screwdriver to hang the spring on the return spring post of the main support.

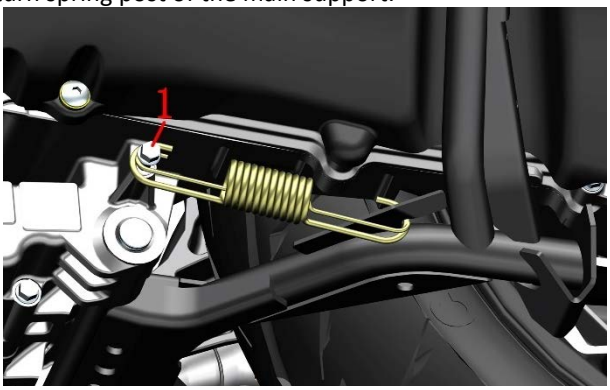

4. Replace the return spring post of the main support

After removing the main bracket referring to the previous steps, use an 8# sleeve to remove the main bracket return spring column counterclockwise. It is recommended to apply a proper amount of thread fastening glue before assembly. Torque: 12 N.m (1.2 kgf.m, 9 lbf.ft).

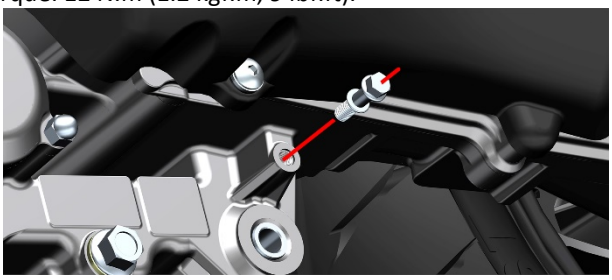

Sound, light, and electrical device Inspection

Caution:

●Before driving, check whether the lights of the whole car are normal, including turn signals, tail lights, brake lights, headlights, etc. Whether the horn is normal. Whether the windshield rises and falls normally.

1. Check

The procedure for disassembling D125/D250 and D350 is the same

For details of the lamps and lanterns of the whole vehicle, please refer to the lamps and lanterns distribution diagram in the vehicle information of this manual.

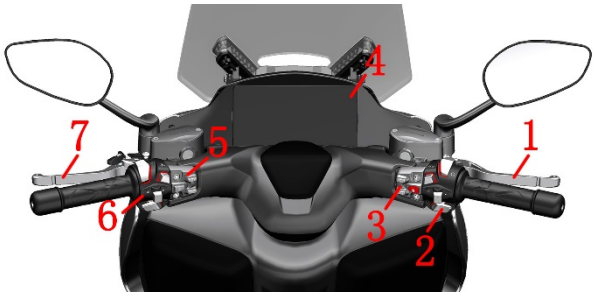

1. Front brake handle 2. Right handle switch 3. Right auxiliary switch 4. Meter 5. Left auxiliary switch 6. Left handle switch 7. Rear brake handle

a. Park the vehicle on a flat ground or a lifting platform, lower the main support, and retract the side support.

b. Press the unlock button of the right auxiliary switch①After the vehicle is unlocked and energized, confirm that the flameout switch④ is pulled to "", pinch the front or rear brake handle, and press the start button② to start the engine.

③Light switch: keep it at the "●" position, check whether the front position light, rear position light and license plate light are normally on; pull it to " " to check the handle backlight, front light, front position light, rear position light, and license plate The lights should all be on.

⑤ECO button: Press the meter and it should light up "E", and press it again to light up "S", and the two modes can be switched freely.M125/155 do not have this button.

⑥SEAT: Press to check whether the cushion lock is normally opened.

⑦FUEL: Press to check whether the fuel tank cover is normally opened.

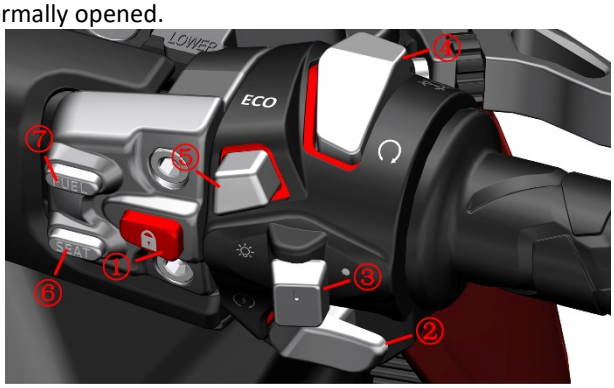

c. The left switch button test. If you need a more detailed understanding of each button function, you can check the driver's manual. Here is only a brief description of how to test whether it is normal.

①SET key: Short press SET to enter the main menu/confirm selection. Long press to return to the main interface. Operate this button when driving a vehicle is prohibited.

②MOD key: Select the next item. Operate this button when driving a vehicle is prohibited.

③Windshield switch: Press the windshield glass to complete from retracting to opening or from opening to retracting.

④Steering switch: Push it to the right to check whether the front right and rear right turn signals are flashing normally; press the turn signal to turn off; push it to the left to check whether the left front and left rear turn signals are normal.

⑤Hazard warning lights: Press it down and the 4 turn signals will flash, press it again to turn off. It should comply with the requirements of traffic laws and should not be used in non-emergency situations.

⑥Horn: Press the horn to sound once to confirm whether the sound is clear and loud.

⑦Dimmer switch: Pull it to "" to check whether the high beam light is on, and the high beam indicator symbol on the meter lights up at the same time. Pull to "" to check whether the low beam light is on. The far and low beams should be used reasonably in accordance with traffic laws and regulations.

⑧Overtaking warning light switch: When pressed in the low beam, it will turn on the high beam.

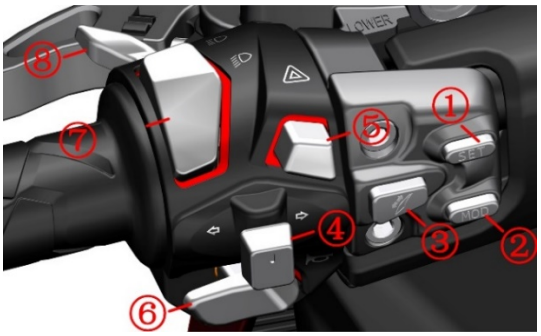

d. Check the battery voltage

Open the cushion, take off the battery cover and use a multimeter to measure the battery voltage. If it is lower than 12V, you should use the charger provided with the car to charge it in time. Be careful not to overcharge and over discharge, and the charging voltage of the charger must not be higher than 15V. When the car is not used for a long time, it should be charged regularly in accordance with the requirements of the driver's manual. If the battery fails, it should be properly handled by a professional recycling agency, and do not discard it at will to avoid environmental pollution.



If the battery power supply fails to start, it can be charged through the PKE charging port.

Open the right storage box cover, insert the buckle with your fingernail or a thin flat-blade screwdriver, press inward and pull out the buckles on both sides, and then remove the right storage box cover.



Open the rubber plug and insert it into the original standard charger DC plug. Then plug the AC socket into the 110-220V power supply. The battery damage caused by using inferior charger is not included in Three Replacement Policy.

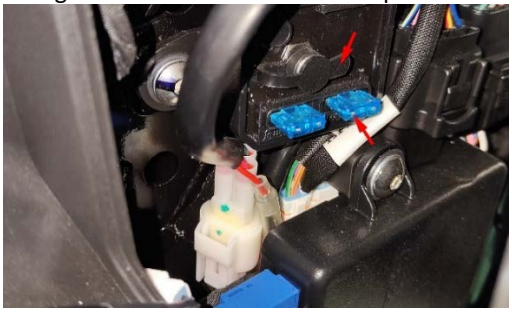

●Note: When reassembling batteries or fuses, please remember to reset the EFI hardware. For details, see the service information in this section.

2. Headlight height adjustment

Caution:

●The height of the headlights is too high or too low, which will affect safe driving. The light height should be adjusted reasonably according to the presence or absence of the occupant and the weight change of the driver.

●It is strictly forbidden to adjust the light height during riding. It is recommended to find a smooth road with a straight line distance of about 150 meters for adjustment under the premise of not affecting traffic safety at night.

Use the 8 # open-end wrench to adjust the light height from the right under the headlight upward; From the top view, clockwise rotation means lowering, and counterclockwise rotation means raising. (Note: Both sides need to be adjusted at the same time when adjusting the headlight

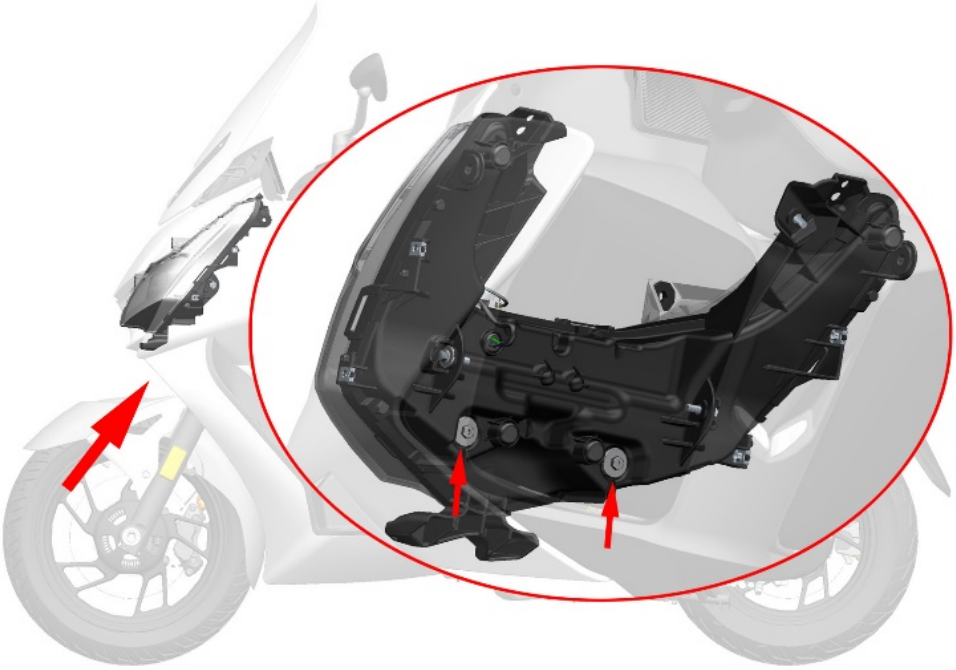

3.Fuse box

Caution:

●If the fuse is blown, you must replace the fuse of the same specification. It is forbidden to use wires such as copper or iron wire for direct connection.

●If it is blown after replacement, you need to troubleshoot the entire vehicle cable before replacing it.

●This vehicle uses a small fuse. The width is about 11mm (0.43in), the length is about 17mm (0.67in), and the thickness is about 4mm(0.16in).

●Use the buzzer file of the multimeter to connect the exposed metal part of the fuse to judge whether it has been blown, or use a tool to unplug and observe.

Refer to the previous steps to remove the battery cover and then pull up the fuse box. After opening the fuse box cover, check whether the fuse is normal.

No.	Name	Function	Specification
①	Main insurance	Protect all circuits	25A
②	ECM	Protect ECM, ECM relay, oil pump relay and other electrical devices	15A
③	Regular power supply	Protect fans, meters, and anti-theft device connectors	15A
④	Hydraulic control unit motor	Protect ABS hydraulic control unit motor	15A
⑤	Reserve	-	25A
⑥	Reserve	-	15A
⑦	Hydraulic control unit ECU	Protect the hydraulic control unit	10A
⑧	Light	Protect the headlight	15A
⑨	Reserve	-	15A
⑩	Reserve	-	10A



No.	Name	function	Specification
①	start up	Protection starting circuit	10A
②	ABS	Protect the ABS controller	1A
③	Assistant	Protect position lights, turn signals, tail lights, brake lights, license plate lights, horns, overtaking lights and other lamps	10A
④	Others	Protect the deputy handle switch, Speedometer, windshield, anti-theft device connector	10A

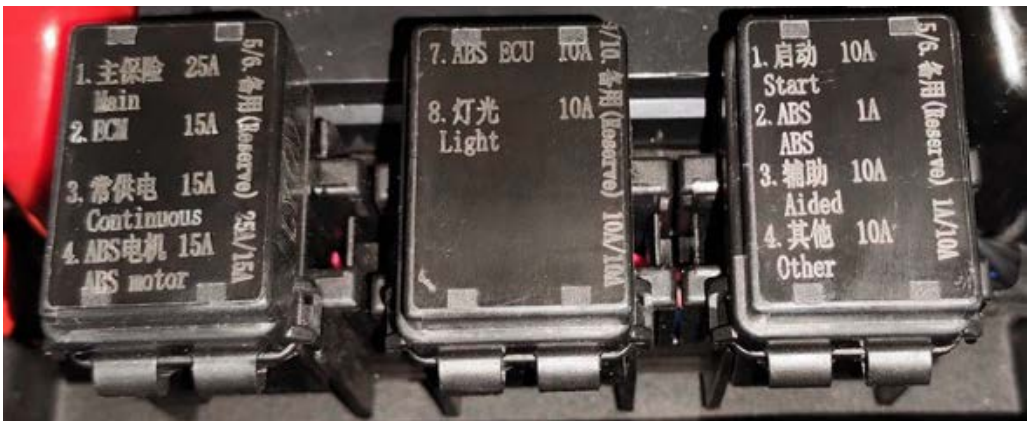



4. Troubleshooting

If the button cannot be pressed, it is directly judged as a switch problem. If there is no response when pressed, it is necessary to judge the problem of the switch, circuit, or electrical device.

4.1 Right hand switch

a.No response when pressing the start button：

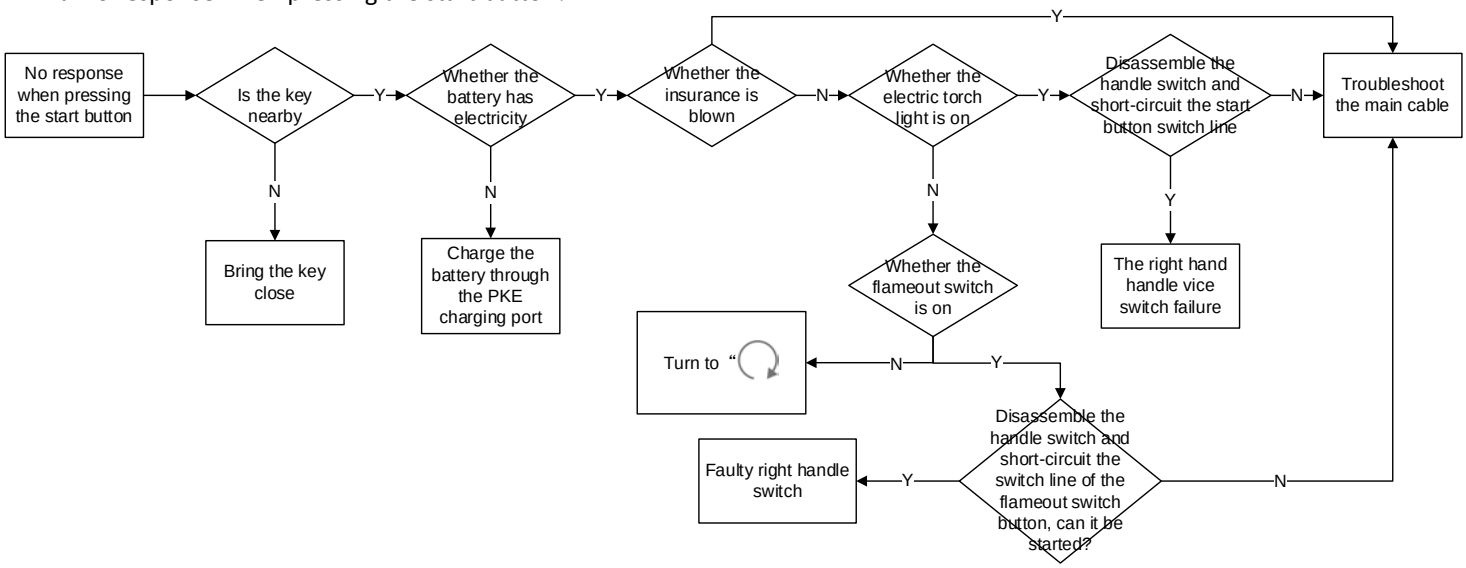

b. When the light switch is turned on, the headlight does not turn on, check whether the light fuse is blown, if it is blown, check the cable fault; if it is normal, disconnect the handle switch and short the light switch line, if it is lit, it is judged as a switch failure. Otherwise, check for cable or headlight failures.

c. The "E"/"S" mode cannot be switched by pressing the ECO button. Disconnect the switch and short the ECO button switch line. If it is lit, it is judged as a switch failure. If it is not lit, check the meter and cable failure.

4.2 Right hand handle vice switch

a. “FUEL” Button failure

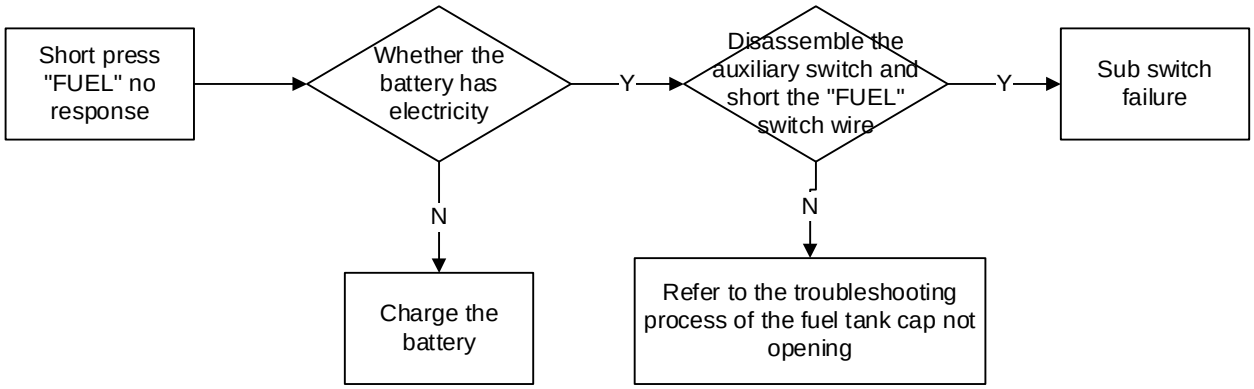

b. No response at start-up

If the engine cannot be started, please refer to the previous "No response when pressing the start button" for troubleshooting.

c. "SEAT" button failure

If the battery is out of power and inconvenient to charge, or the cushion lock fails to open, you can fill in the quality feedback form and let the engineer guide the method of manually opening the cushion. For safety reasons, this manual does not provide this method.

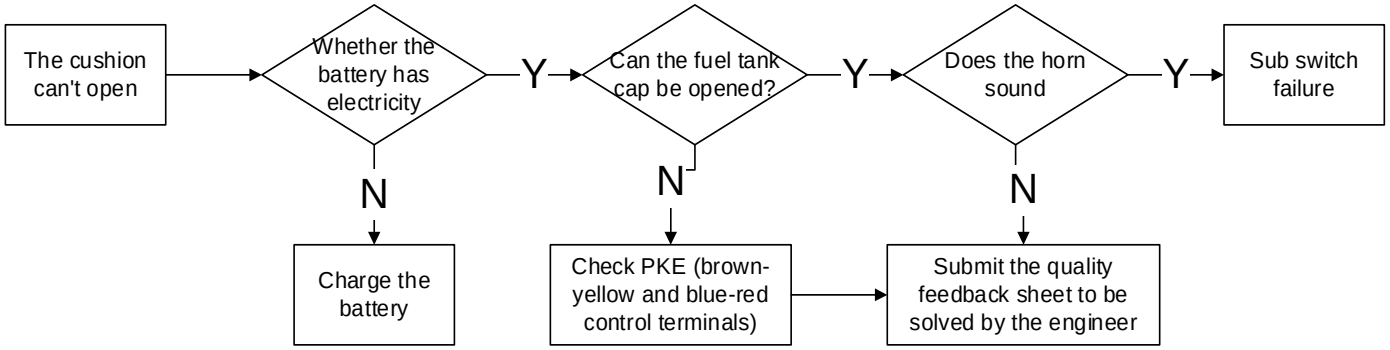

d. “ ” Not responding

There is a detailed description of PKE functions in the driver's manual, including the method of emergency starting the vehicle when the sensor key is exhausted, and the specific meaning of the buzzer sound.

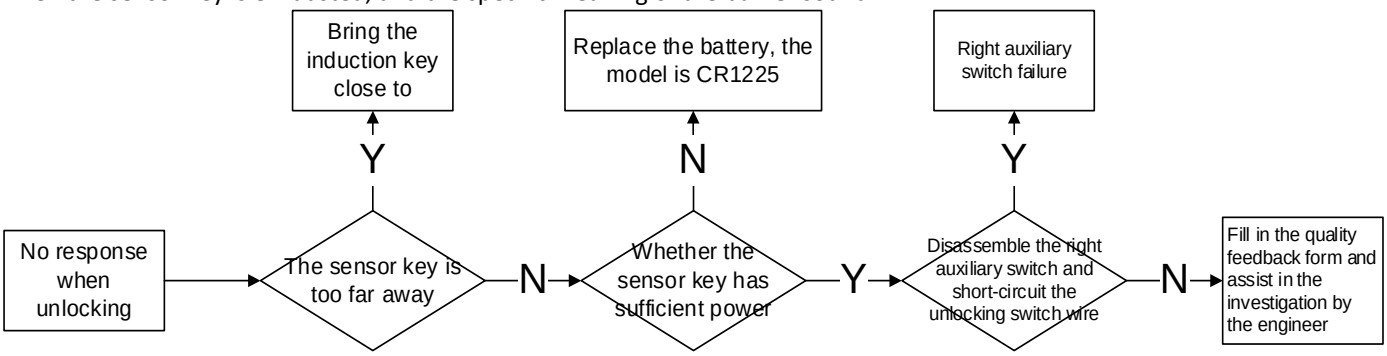

4.3Left hand handle auxiliary switch

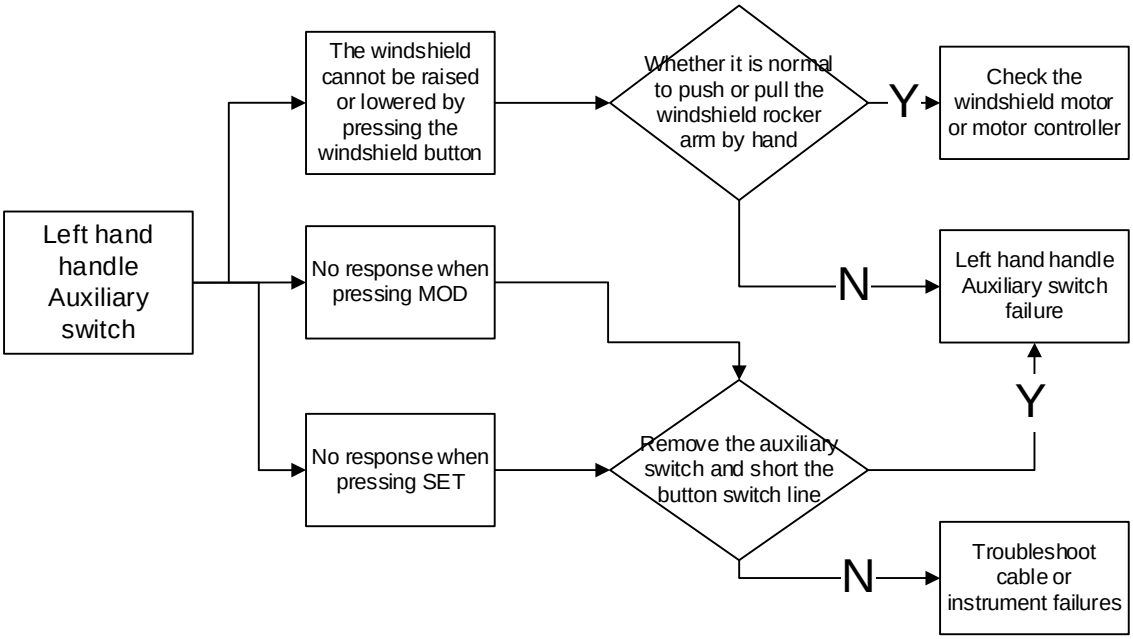

4.4 Horn

Caution:

●There should be more than 5 seconds interval when adjusting or checking the horn. Continuous sounding may cause ablation of the internal coil of the horn.

●The horn is a riveted structure, which is difficult to restore after disassembly.

●It is prohibited to adjust the bracket nut③.

a. If the horn switch does not respond, please refer to the troubleshooting process of the left-hand switch on the next page

b. The speaker sounds abnormal

If the sound is small, hoarse, etc., first confirm whether the battery is sufficient, and turn on the headlights to determine whether the battery is sufficient according to the brightness of the light. It is normal to start the engine and raise the speed, but abnormal low speed can also be judged as insufficient battery power. The battery needs to be charged.

If the power is sufficient, check whether the horn adjustment bolts① and nuts② are loose. If they are loose, tighten them and check again. If the fault cannot be eliminated after tightening, try to loosen the nut② and then use a Phillips screwdriver to fine-tune the bolt①. If the horn does not sound, turn it counterclockwise about 270 degrees, if it is hoarse, turn it clockwise until the sound is normal; tighten the nut② after the sound is normal. If the fault persists, it is judged that the horn is faulty and needs to be replaced.

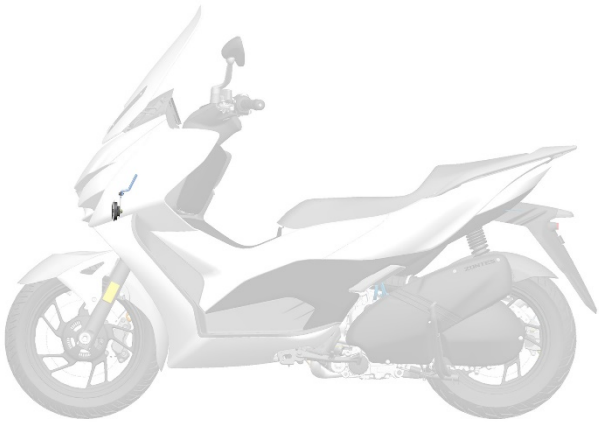



4.5 Left hand switch

The left hand switch controls the turn signal, horn and far, low beam, hazard warning light, and overtaking light. It is difficult to check if there are more lines.

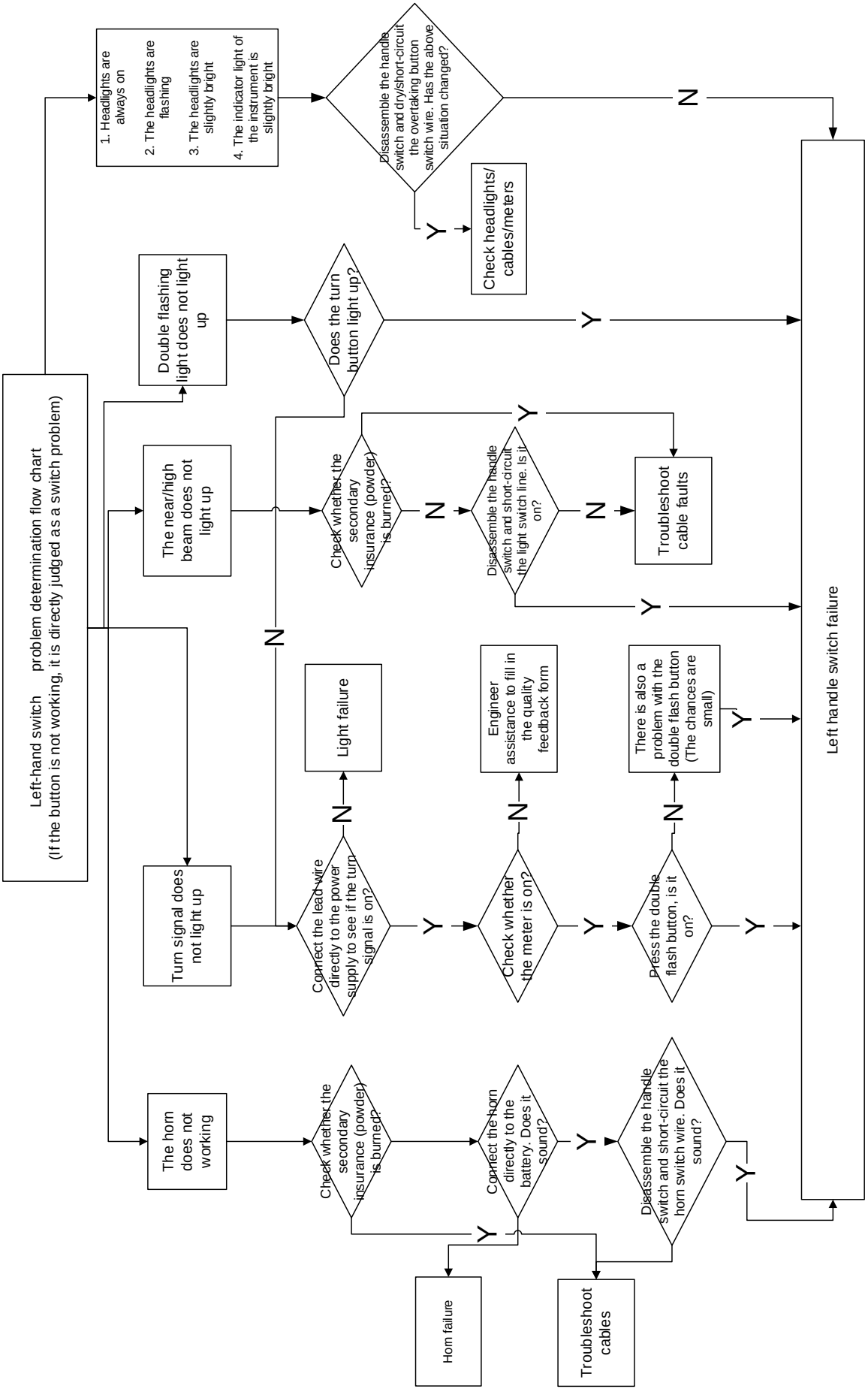

4.6 Light

Caution:

●When using wires to detect lamps, please pay attention to distinguish the positive and negative poles. For detailed wire colors, please refer to the electrical schematic diagram in the driver's manual provided with the car.

The troubleshooting methods of the lamps are basically the same. You can directly lead the wires to the battery with the battery. If the lamp is normal, you need to check the cable or switch failure, if it is not normal, it is the lamp failure. The vehicle lamps are all LED, and the lamp housing is usually ultrasonically welded or sealed with glue and the waterproof performance will be invalid after disassembly.

●The luminaire is reserved with ventilation holes. When the ambient humidity is high, water mist may form inside the luminaire, which generally does not affect the use. It will disappear automatically after the humidity drops.

●The surface of the lamp should be kept clean. It can be moistened with clean water and then gently wiped with a clean soft cloth. The soft cloth should be changed to a different position or cleaned with clean water each time the soft cloth is wiped. If it is wiped directly, the remaining fine sand particles may scratch the surface of the lamp.

The general process of lamp troubleshooting:

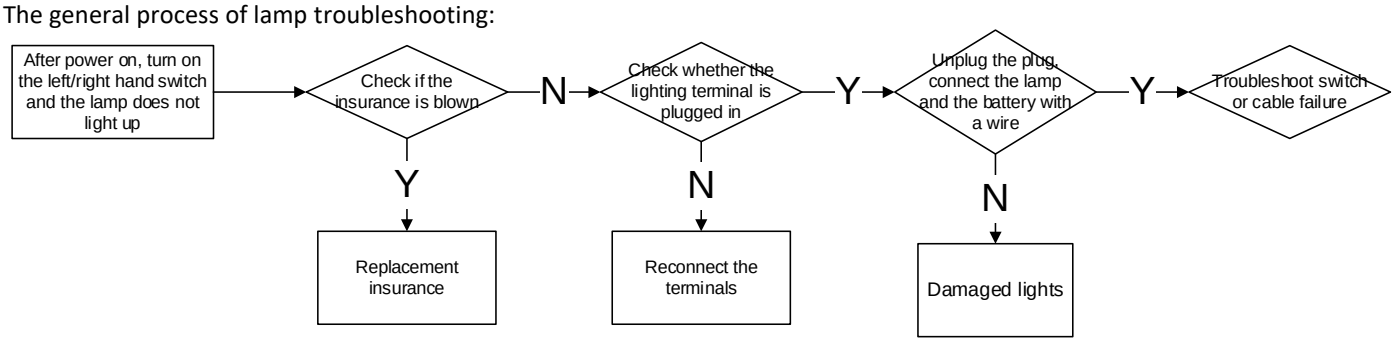

4.7 Windshield failure

When the windshield switch is pressed, the windshield lifts and falls abnormally, which can be investigated separately according to the following two phenomena.

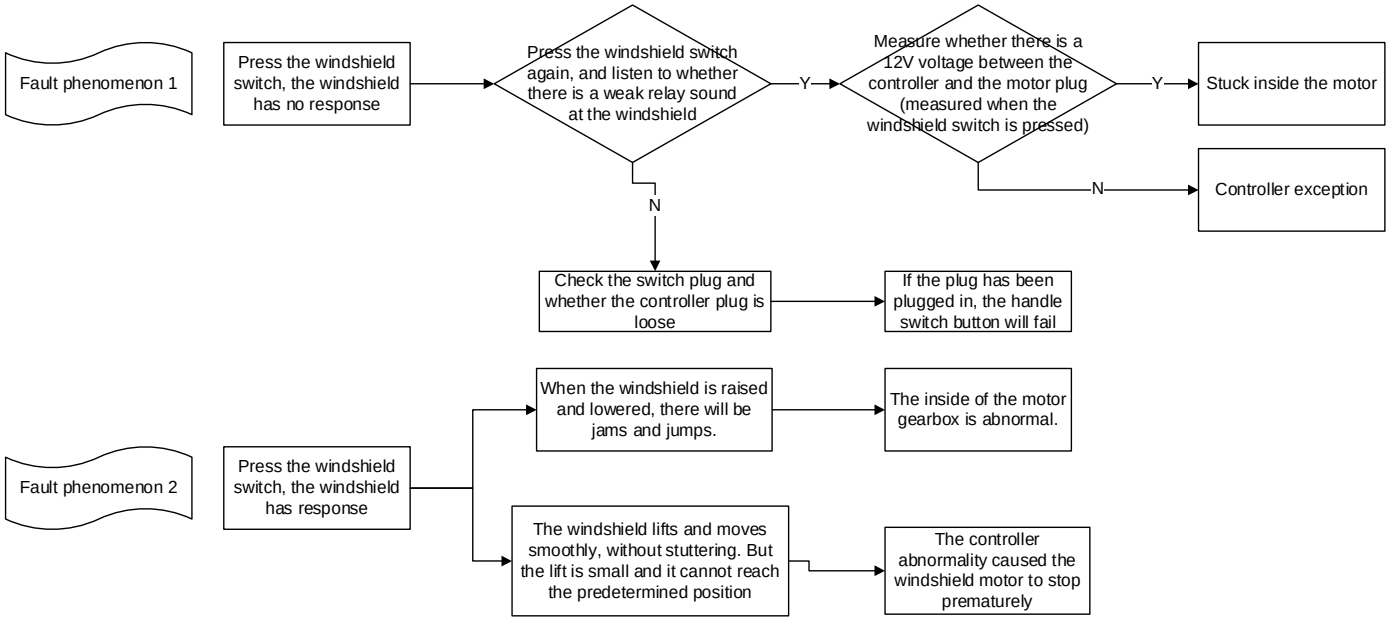

3. EFI system

Know Before Service

Caution:

1. The structure and working principle of the EFI system are relatively complicated, and it is necessary to have a certain understanding of the working principle and structural characteristics of each EFI system before checking and troubleshooting. The content of this chapter requires certain maintenance experience. It is recommended to check or repair with a qualified maintenance organization.
2. Please keep the fuel in the fuel tank at least 3L (3.17 US qt, 2.64 lmp qt, 0.79 US gal, 0.66 lmp gal), otherwise it will affect the normal operation of the EFI system. Instrument oil level display 1 grid or less need to be replenished fuel as soon as possible.
3. When the vehicle is parked for more than 3 hours, the vehicle should be energized before the first start. Turn on the flameout switch "" and wait for the fuel pump to complete the fuel pressure before starting the vehicle.
4. If you fail to start several times, the cylinder may have been flooded. You need to turn the throttle to the end and press the start button for 3 seconds to execute the cylinder cleaning procedure.
5. If the battery low voltage warning symbol flashes, charge the battery in time; too low voltage may cause the EFI components to fail to work normally, fail to start or start difficult, insufficient power, etc.
6. The EFI system needs to be reset when the battery is reinstalled, the power is suddenly cut off during driving, the idling speed is abnormal, and the insurance is re-plugged. The specific method is as follows:
   a. Unlock the vehicle and support the main bracket;
   b. Pinch the brake and start the vehicle;
   c. Pull the engine speed above 3000 rpm;
   d. After releasing the throttle, turn off the flameout switch and lock the car;
   e. After waiting for 5 seconds, unlock the vehicle again to complete the reset of the EFI system.
7. Pay attention to the following when checking or troubleshooting EFI system failures:
   a. After power-on, the parts connected to the 12V power supply should not be removed at will to avoid the self-inductance of the coil in the electrical appliance and cause the instantaneous voltage to damage the ECU or sensor.
   b. Do not blindly disassemble and inspect when failure occurs. Check the electrical control part after confirming that the mechanical part is normal.
   c. During the fault diagnosis, give priority to using the diagnostic Speedometer to read the fault code or determine the fault code according to the flashing frequency of the fault indicator, and conduct targeted inspections.
   d. Pay attention to check whether the EFI components are oxidized and whether the connection is reliable

   Tools：

PT300EFI flashing diagnostic Speedometer（16PIN）	Multimeter
	

8. The driving conditions and maintenance conditions of each vehicle are different, so it is impossible to list all the fault phenomena and troubleshooting procedures one by one. Only some of the more common faults can be listed. Maintenance personnel themselves also need to have certain professional knowledge and experience accumulation process.

WARNING

●Do not turn on the flameout switch for a new car or a vehicle that is about to run out of fuel. Be sure to replenish enough fuel before turning it on, otherwise the fuel pump will be damaged if it runs dry without fuel.

●Do not insert or unplug the plugs of various parts at will, and it is forbidden to clean the plugs directly with water. After plugging and unplugging, be sure to check whether it is plugged back correctly.

Error code

Caution:

●Unlock the vehicle and turn on the flameout switch. When it is not started, the EFI fault light is always on as normal. If it is not on, the vehicle cannot be started.

●After starting the vehicle, if the fault light is on and the EFI failure is reported, it means that the EFI system is abnormal.

●When the EFI system reports a failure, continuing to drive the vehicle may cause damage. Please contact a qualified maintenance organization or our special maintenance point for troubleshooting in time.

1.Read the fault code through the meter

When the engine is running, if the EFI failure indicator light " " is on, it indicates that there is a fault in the EFI component that needs to be rectified.

a. Turn the throttle to the maximum before energizing the whole vehicle, and keep it in the fully open position, then turn on the electric door lock and flameout switch. The system detects a fault and the fault light will start to flash.

b. The fault code has 4 digits. Read the fault code according to the number of flashes. For example: P0201 flashes in the following way: continuous flashing 10 times-intermittent 1 second-continuous flashing 2 times-intermittent 1 second-continuous flashing 10 times-intermittent 1 second- Flashes once in a row.

c. If there is more than one fault, the next fault code will flash after the fault light is off for 4 seconds. Therefore, after the fault light is off during the flashing process, waiting for more than 5 seconds and still no longer lights up, it means that the fault code has been flashed.

d. If you need to observe the blinking code again, you need to turn off the flameout switch first, then turn it on again, and keep the throttle fully open.

2. Read the fault code through the diagnostic tool

Open the left storage box cover, insert the buckle with your fingernail or a thin flat-blade screwdriver, press in and pull out the buckles on both sides at the same time, then remove the right storage box cover(1).

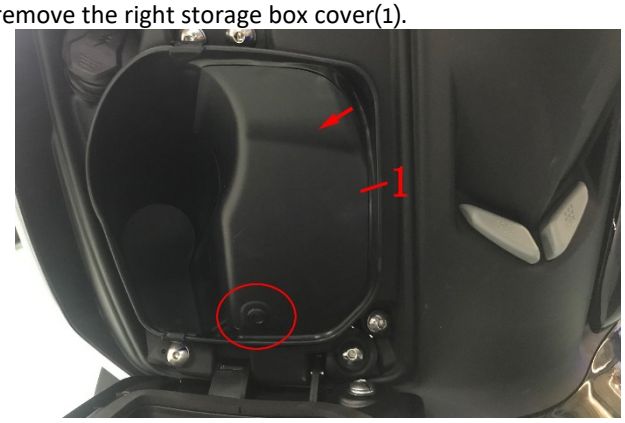

Pull out the OBD plug, connect the diagnostic tool to read the fault code. Different batches of OBD plugs may have different colors, including black and white, with the same functions. If the OBD plug has a protective cover, remove it first.

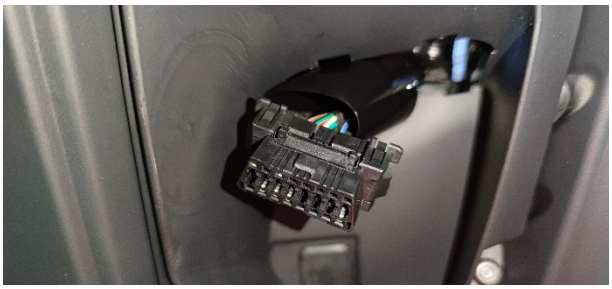

3. Error code
D150/155/250/350/368

Code	Instruction	Code	Instruction
P0030	The heating control circuit of the upstream 1 cylinder oxygen sensor is open	PD116	Engine coolant temperature sensor signal is unreasonable
P0031	The upstream 1 cylinder oxygen sensor heating control circuit voltage is too low	P0117	Engine coolant temperature sensor circuit voltage is too low
P0032	The upstream 1 cylinder oxygen sensor heating control circuit voltage is too high	P0118	Engine coolant temperature sensor circuit voltage is too high
P0106	The intake pressure sensor/atmospheric pressure sensor is unreasonable	P0122	Throttle position sensor circuit voltage ultra-low limit
P0107	Intake pressure sensor is shorted to ground	P0123	Throttle position sensor circuit voltage limit
P0108	The intake air pressure sensor is shorted to the power supply	P0130	The signal of the upstream 1 cylinder oxygen sensor is unreasonable
P0112	Intake air temperature sensor signal voltage is too low	P0131	The signal of the upstream 1 cylinder oxygen sensor is too low
P0113	Intake air temperature sensor signal voltage is too high	P0132	The signal circuit voltage of the upstream 1 cylinder oxygen sensor is too high
P0134	Upstream 1 cylinder oxygen sensor circuit signal failure	P0627	Oil pump relay control circuit is open
P0201	1 cylinder injector control circuit is open	P0629	The oil pump relay control circuit is shorted to the power supply
P0261	1 cylinder injector control circuit is shorted to ground	P0650	MIL lamp driver stage circuit failure
P0262	The 1 cylinder injector control circuit is shorted to the power supply	P0444	Canister solenoid valve open
P0322	No speed sensor pulse signal (open circuit or short circuit)	P0459	Canister solenoid valve is shorted to the power supply
P0480	Fan control circuit is open	P0458	Canister solenoid valve is shorted to ground
P0691	Fan control circuit is shorted to ground	P2300	1 cylinder ignition coil is shorted to ground
P0692	The fan control circuit is shorted to the power supply	P0628	The oil pump relay control circuit voltage is too low
P0511	Idle speed actuator control circuit is open	P1098	Dump sensor signal voltage is too low
P0563	System battery voltage is too high	P1099	Dump sensor signal voltage is too high

D368(ETC)

No.	Fault codes	Fault code description
1	P0571	Brake light signal circuit malfunction
2	P0116	Engine coolant temperature exceeds the reasonable threshold fault
3	P0118	Engine coolant temperature sensor circuit voltage too high
4	P0117	Engine coolant temperature sensor circuit voltage too low
5	U0073	CAN1 Busoff fault
6	P0121	Electronic throttle position sensor 1/2 signal unreasonable
7	P0123	Electronic throttle position sensor 1 signal circuit voltage too high
8	P0122	Electronic throttle position sensor 1 signal circuit voltage too low
9	P0223	Electronic throttle position sensor 2 signal circuit voltage too high
10	P0222	Electronic throttle position sensor 2 signal circuit voltage too low
11	P0420	Three-way catalytic converter oxygen storage capacity degradation
12	P0106	Intake pressure sensor above upper limit fault
13	P0106	Intake pressure sensor below lower limit fault
14	P0108	Intake manifold pressure sensor voltage too high malfunction
15	P0107	Intake manifold pressure sensor voltage too low malfunction
16	P0105	No change in signal from intake pressure sensor 1
17	P2106	Electronic throttle drive stage malfunction (open circuit)
18	P2106	Electronic throttle drive stage malfunction (open circuit)
19	P2106	Electronic throttle drive stage malfunction (open circuit)
20	P2106	Electronic throttle drive stage malfunction (open circuit)
21	P1568	Return spring check maximum malfunction
22	P1545	DVE position deviation malfunction
23	P1559	Throttle limp home position self-learning malfunction
24	P1545	DVE position deviation malfunction
25	P1545	DVE position deviation malfunction
26	P1579	Electronic throttle self-learning conditions not satisfied
27	P1564	System voltage does not Satisfy electronic throttle self-learning conditions
28	P1559	Throttle limp home position self-learning malfunction
29	P1565	Throttle mechanical lower stop point re-learning failure
30	P0262	No.1 cylinder injector control circuit voltage too high
31	P0261	No.1 cylinder injector control circuit voltage too low
32	P0201	No.1 cylinder injector control circuit open
33	P0322	Rotational speed sensor signal loss malfunction
34	P061A	Second Layer Torque Monitoring Malfunction
35	P1573	Monitoring Error Response Malfunction
36	P1574	Rear oxygen sensor heating control circuit voltage is too low
37	P0036	Open Rear Oxygen Sensor Heating Control Circuit
38	P0053	The internal resistance of the Bank1 front oxygen sensor heating is unreasonable
39	P0032	Bankl oxygen sensor I heater voltage too high malfunction
40	P0031	Bank1 oxygen sensor heater voltage too low malfunction
41	P0030	Bankl oxygen sensor heater signal control circuit open malfunction
42	P0351	Cylinder ignition coil control circuit open
43	P2301	Cylinder ignition coil control circuit voltage too high
44	P2300	Cylinder ignition coil control circuit voltage too low
45	P0111	Inlet temperature over-rationality threshold over-limit fault
46	P0113	Intake air temperature sensor circuit voltage too high malfunction
47	P0112	Intake air temperature sensor circuit voltage too low malfunction
48	P0114	Inlet temperature stuck fault
49	P0629	Oil pump relay control cirquit voltage too hioh
50	P0628	Oil Pump Relay Control Circuit Malfunction
51	P0627	Oil Pump Relay Control Circuit Malfunction
52	P2270	Bank1 Rear Oxygen Sensor Modification - Signal Continues to Be Strong
53	P2271	Bank1 Rear Oxygen Sensor Modification - Signal Continued Lean

54	P0133	The Bank1 oxygen sensor responds to both concentrated and dilute mixed gases with a delay
55	P0692	Fan Control Circuit Voltage Too High
56	P0691	Fan Control Circuit Voltage Too Low
57	P0480	Cooling fan Control Circuit Open
58	P0138	Rear oxygen sensor signal line short to power supply
59	P0137	Rear oxygen sensor signal line short to ground
60	P2232	Rear oxygen sensor signal line coupled to heating line
61	P0136	Rear oxygen sensor signal open
62	P0132	Bankl Oxygen Sensor Signal Voltage Too High Malfunction
63	P0131	Bank1 Oxygen Sensor Signal Voltage Too Low Malfunction
64	P0130	Bank1 oxygen sensor signal voltage low fault
65	P0134	Bank1 Oxygen Sensor Signal Circuit Open Malfunction
66	P0301	Misfire fault
67	P1530	Electronic Control Unit (ECU) Fault Causing Irreversible Injection Cutoff (ICO)
68	P1531	AD converter given voltage test monitoring fault
69	P060D	Second Layer Throttle Pedal Signal Rationality Malfunction
70	P061C	Second Layer Engine Speed Monitoring Malfunction
71	P1527	First Layer Safety Fuel Cut-off Monitoring Malfunction
72	P1528	Second Layer Safety Fuel Cut-off Monitoring Malfunction
73	P1530	Electronic Control Unit (ECU) Fault Causing Irreversible Injection Cutoff (ICO)
74	P061A	Second Layer Torque Monitoring Malfunction
75	P1573	Monitoring Error Response Malfunction
76	P1574	Errorpin is activated and monitoring communication is normal
77	P2123	Electronic Throttle Pedal Position Sensor 1 Signal Voltage Too High
78	P2128	Electronic Throttle Pedal Position Sensor 2 Signal Voltage Too High
79	P2122	Electronic Throttle Pedal Position Sensor 1 Signal Voltage Too Low
80	P2127	Electronic Throttle Pedal Position Sensor 2 Signal Voltage Too Low
81	P0651	5V Power Supply Module 2 Malfunction Occurred
82	P2138	Electronic Throttle Pedal Position Sensor Signal Unreasonable
83	P0459	Charcoal Canister Control Valve Control Circuit Voltage Too High
84	P0458	Charcoal Canister Control Valve Control Circuit Voltage Too Low
85	P0444	Charcoal Canister Control Valve Control Circuit Open
86	P0119	Engine temperature rationality fault
87	P0563	System Battery Voltage Too High
88	P0501	Speed signal failure
89	P06B8	Read/Write NVM Block Error Occurred
90	P06B8	Read/Write NVM Block Error Occurred

4. Clear fault code

After troubleshooting the EFI, it needs to be cleared manually or through a diagnostic tool. M125 need to use the ISO15765-4 communication protocol (CAN diagnosis) diagnostic instrument to clear.

4.1 Manually clear

a. Unlock the vehicle

b. Turn off the flame switch to "";

c. Start the vehicle, refuel in neutral gear to more than 4000 rpm and hold for 10 seconds;

d. Release the throttle, turn the flameout switch to "", and be careful not to power off the whole vehicle, and wait for more than 10 seconds;

e. After repeating the above three steps for 4 times, the fault light goes out.

4.2 Use the diagnostic tool to clear

The steps of different brands or models may be different, so please refer to the description of the diagnostic Speedometer manual to clear the fault code.



●When the engine is running, the fault light does not turn on, and the fault light flashes after the engine is turned off, it is a historical fault, which will not affect the performance and life of the whole vehicle, and will automatically disappear late

EFI parts layout

1	2	3	4	5	6	7
Dump switch	OBD diagnostic interface (main cable)	Fuel pump	Carbon canister solenoid valve	Ignition coil body	EFI relay	Fuel injector
						
8	9	10	11	12	13	14
Oxygen Sensor	Water and oil shared sensor	Throttle Body Assembly	MSE6.0 ECU	Crankshaft position sensor	Fuel pump (D125/D155/D250)	Oxygen Sensor (D125/D155)
						
15	16	17	18	19	20	21
Ignition coils (D125/D250/D155)	Fuel injector (D125/D155)	Crankshaft position sensor (D125/D155)	Throttle Body Assembly (D125/D155)	MSE8.0 ECU (D125)	MSE8.0 ECU (D125-2024)	MSE6.0 ECU(D250)
						
22	23	24	25			
Throttle Body Assembly (D250)	MSE8.0 ECU (D155)	Starter relay （D155）	Relay （D155）			
						

Fault diagnosis and elimination of EFI parts

Caution:

●Once the EFI components are disassembled, the EFI system needs to be reset. For details, see the service information in this chapter.

●Fuel pumps, three-in-one sensors, stepping motors, ECUs, etc. are precision parts, such as unauthorized disassembly may cause damage, and it is not within the scope of the three guarantees for human reasons.

●After disassembling the throttle valve body, apply lint-free cloth or textured paper to seal the air filter outlet and intake manifold to prevent foreign matter from entering.

1. Dump switch

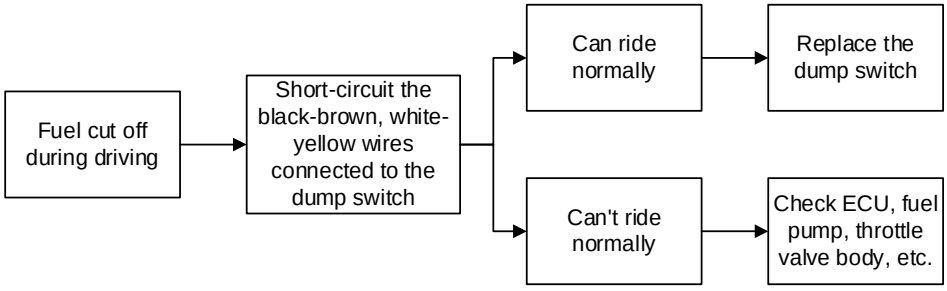

2. OBD port

The main cable has its own OBD interface, and the location is shown in the previous section to read the fault code through the diagnostic Speedometer. Use the diagnostic tool through the diagnostic interface to read historical fault codes, current fault codes, clear fault codes and read ECU status.

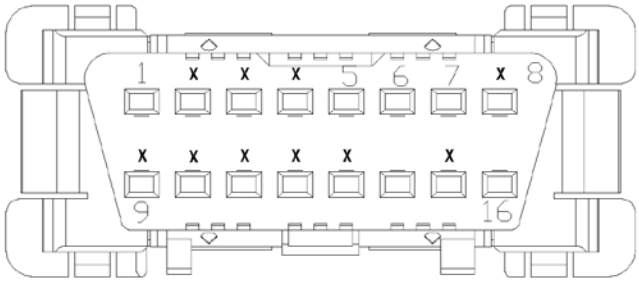

The picture above shows the cable end connector

No.	1	5	6	7	14	16
Color	Blue/yellow	green	yellow/white	brown/white	green/black	Red

3. Fuel pump

Caution:

●The fuel pump is a precision component that needs to be assembled in a dust-free workshop and requires rigorous testing, so it is forbidden to disassemble it by yourself.

●The engine of this vehicle is designed with a high compression ratio. It is recommended to add 95# and above unleaded gasoline for a long time. In order to extend the service life of the vehicle, please be sure to go to a regular gas station to refuel.

●It is forbidden to run the fuel pump in dry state or in water, otherwise its service life will be shortened, and it will be directly damaged in severe cases. The positive and negative wires of the fuel pump cannot be connected in reverse. It is forbidden to disassemble the fuel inlet filter, which may cause foreign matter to enter the fuel pump or block the fuel injector.

●The disassembly of the fuel pump or high-pressure fuel pipe should be carried out in a well-ventilated, dust-free or dust-less environment; dangerous operations such as fireworks or mobile phones should be strictly prohibited in the disassembly site.

When it is difficult to start the engine or start without dust; the engine is not working well, the operation is unstable, etc.; the fuel injector does not inject fuel; the engine is running weak and the acceleration performance is deteriorated. It is necessary to check whether the fuel pump is abnormal.

Refer to the steps of "Maintenance-Fuel Pipe-Replacement of High-pressure Fuel Pipe" in this manual to remove the surrounding bottom plate and high-pressure fuel pipe. Refer to the section "Maintenance-Fuel Pipe-Fuel Pump" to measure fuel pressure with a fuel pressure gauge, or use a simple test method to test whether the fuel pump is normal.



If the fuel pump needs to be removed from the vehicle, the fuel pump can be used to drain the fuel in the fuel tank. After lifting the vehicle, press the plug buckle as shown in the figure to pull out the cable. Remove 5 bolts from the bottom with a 10# sleeve, and then remove the fuel pump after removing the high-pressure fuel pipe bracket. Be careful not to press the fuel outlet pipe shown in the red circle. Once damaged, you can only replace the entire fuel pump assembly.

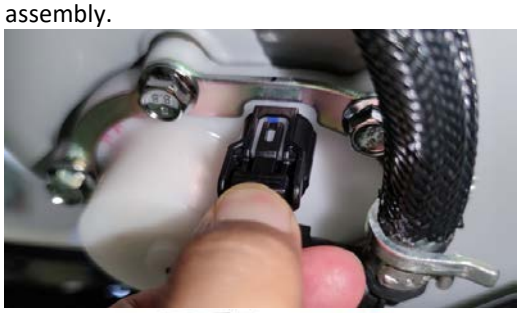



When reassembling, you need to pre-tighten diagonally and then tighten the 5 bolts. Otherwise, the uneven compression of the seal rubber ring of the fuel pump may cause leakage and cause safety hazards.

4. Carbon canister solenoid valve

When the engine performance is poor; the idle speed is poor; the air-fuel ratio is incorrect, the carbon canister solenoid valve should be checked.

Use a multimeter to measure the resistance between the two inserts of the canister solenoid valve plug should be 35±2Ω, otherwise it can be judged that the solenoid valve is faulty.



5. EFI relay

There are one PVC sheaths at the right side of the veliche near the ECU, there are 4 relays. One PVC sheaths at the left rear of the frame, there are 2 relays.

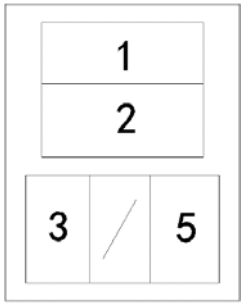



Cable end Relay

3 and 5 are normally closed contacts, which can be tested with a multimeter buzzer. 1 and 2 are normally open contacts. Otherwise, it can be judged as a relay failure.

The following cable end colors are for reference, subject to the actual conditions of the motorcycle. The line colors of different batches may be different, and the functions are the same.

Cable end wire color：

Wire no. / Relay	1	2	3	5
light	Red	Blue/white	Black and white	White
Start assist	green	Green red	Black/ white	Red green
Oil pump	White/ black	Red/black	White/ black	Green/yellow
Main relay	Red	White/ black	Black/ white	Orange black

6. Fuel injector

When the engine is unstable and weak, and the power performance is poor, check whether the injector is normal.

Need to remove the cushion and storage box first.

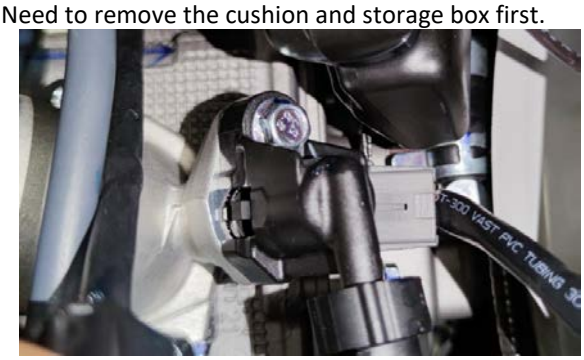

Can be judged by the following methods：

a. Park the vehicle firmly, start the engine, and let the engine run at idle speed. Use the auscultation needle or stethoscope to listen to the working sound of the cylinder. You should be able to hear the rhythmic working sound of the injector. If the sound is clear and even, it works normally. If the sound is low or cannot be heard, the injector needs to be removed for troubleshooting. Or the engine stalls when the injector plug is unplugged, indicating that the injector is normal.



b. Pull out the plug after pressing the anti-trip lock. Using a multimeter to measure the static coil resistance should be 12±0.6Ω, otherwise the injector must be replaced if it fails.



If you need to replace the fuel injector, wait until the engine and muffler have cooled down. After placing the oil container at the bottom, refer to the steps for removing the high-pressure oil pipe to pull out the high-pressure oil pipe at the end of the fuel pump to discharge the remaining fuel. Use a 10# sleeve to remove the bolt(1), remove the injector holder(2), and then take off the injector(3).

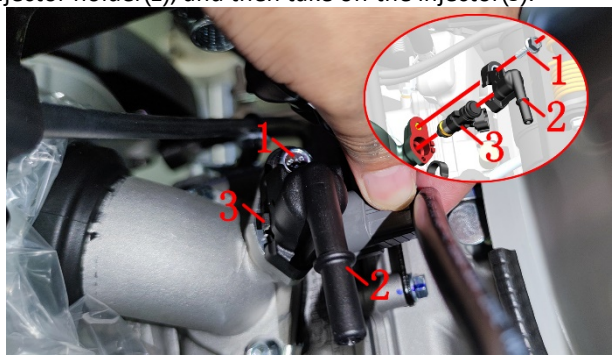

7. Ignition coils

There is no high-voltage spark; the high-voltage spark is weak; when the engine won't start, check whether the ignition coil is normal. Common faults of general ignition coils such as short circuit, open circuit or grounding of the coil will cause no high voltage. In addition, the material of the ignition coil insulation layer is aging, the insulation performance is deteriorated, and the leakage of the ignition coil makes the electric spark weak and the ignition energy is insufficient. As a result, it causes unstable idling, intermittent flameout and inability to catch fire. When encountering this kind of failure, it is necessary to check whether the resistance and insulation performance of the ignition coil meet the requirements, if not, replace it.

Remove the spark plug from the engine and install it on the high-pressure cap according to the steps in the section "Maintenance-Spark plug-Removing the spark plug". Put away the side brackets, use the main bracket to park the vehicle firmly and unlock the vehicle, turn the flameout switch to "", hold the brake handle, and place the spark plug close to the engine cylinder head cover or box (should be far away from the spark plug mounting screw hole) about 6mm (0.24 in), press the start button. If a blue spark is found on the spark plug electrode, the ignition system is

normal, otherwise it should be inspected by a qualified maintenance unit.

If you replace the ignition coil, follow the steps below:

D350/D368

a. Remove the storage box according to the steps in "Maintenance - Spark Plug - Remove Spark Plug". Remove the bolt (1) on the electrical part box with the 5 # hexagonal socket, remove the bushing (2) and buffer rubber (3), and remove the electrical part box.

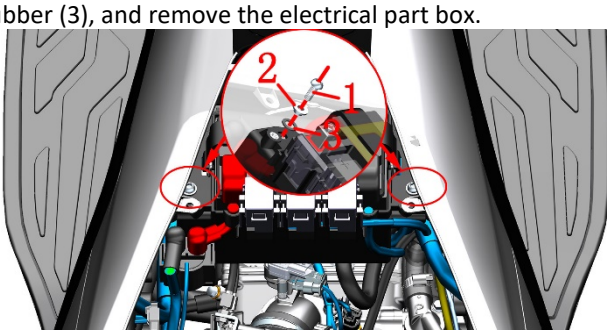

b. Remove the left cover according to the section "Maintenance - Remove Spark Plug". Unplug the high-voltage wire in the figure from the ignition coil.

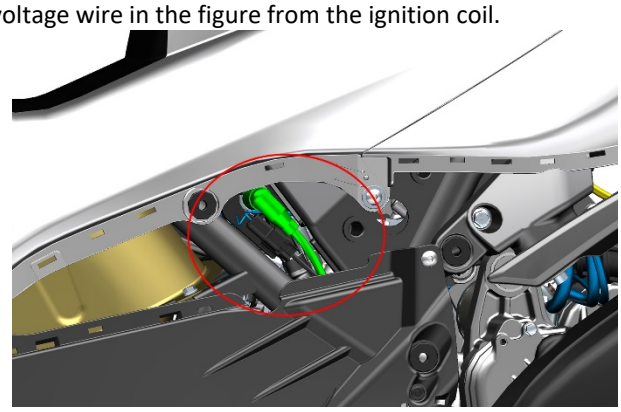

c. Press the arrow and pull out. Unplug the connector of ignition coil (5). Then use 8 # open-end wrench or ratchet wrench to remove the two bolts (4). Replace ignition coil.

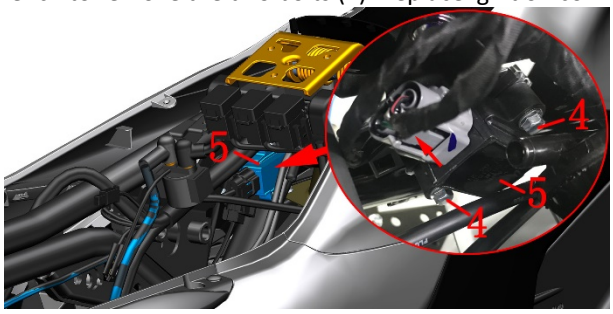

D125/D155/D250

Remove the left cover and left pedal accordingt to the steps in "Maintenance - Spark Plug - Remove Spark Plug".

Unplug the ignition coil connector, pull out the high-pressure cap at the spark plug and use a Phillips screwdriver to remove the two M5×16 bolts(6), cut the cable tie(7) and then remove the ignition coil.

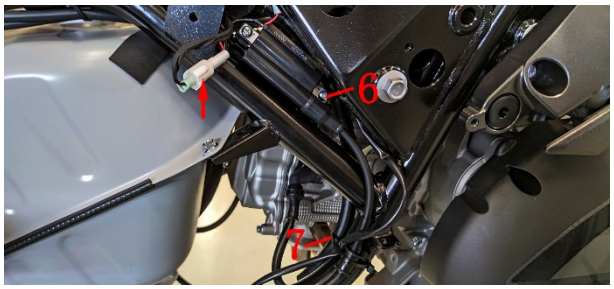

8. Throttle valve body

8.1 Common failure phenomena

1. The engine is easy to stall when the vehicle is running, and it is difficult to start, especially cold starting.
2. Idle speed is unstable or no idle speed, and there is intermittent jitter when accelerating.
3. Insufficient power, poor acceleration performance and unstable operation.

8.2 Disassembly

Please refer to the description in "Maintenance-Throttle Valve Body" in this manual for detailed steps of disassembling and assembling the throttle body, three-in-one sensor and stepper motor.

8.3Troubleshooting process

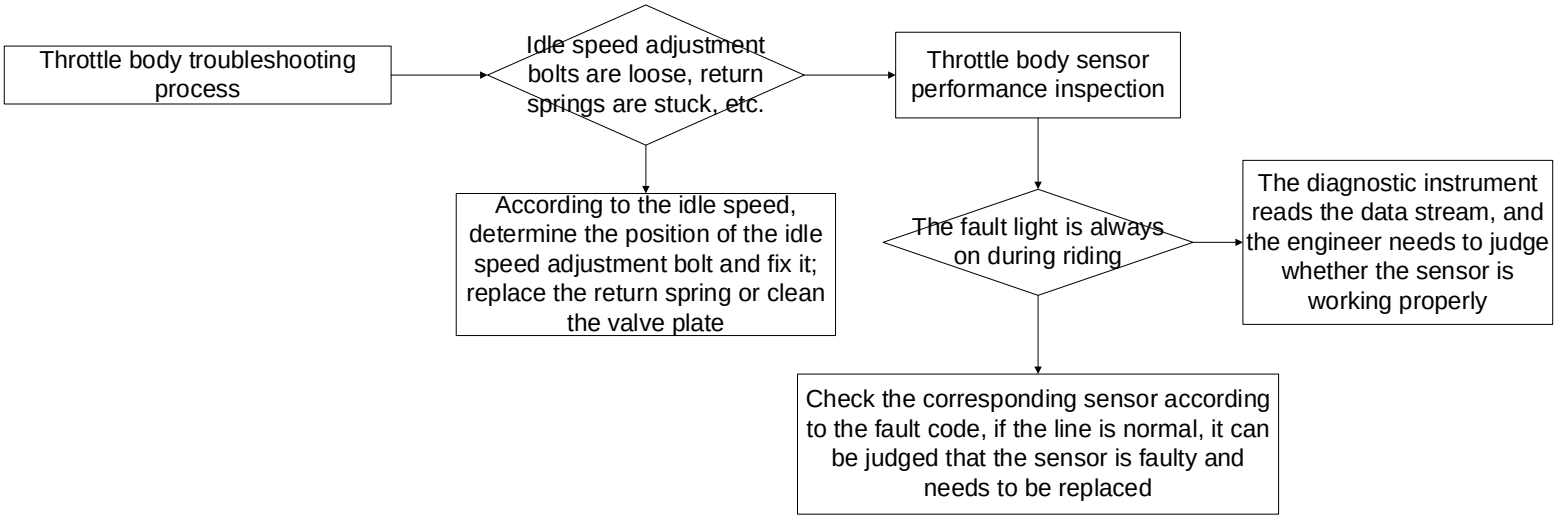

8.4 Sensor



For the disassembly and inspection of the throttle valve body position sensor and the external intake pressure sensor, see the throttle valve body section above.

Air filter intake air temperature sensor

Remove the temperature sensor from the air filter and place it in the ambient temperature 20℃（68F）～30℃（86）, and use a multimeter to check whether the resistance of the two pins is between 2726～1770 Ω.

9. Water and oil shared sensor



When the engine is difficult to start, the idling speed is unstable, the engine performance is poor, and the engine is easy to stall, check whether the sensor is abnormal. The fault code can be read through the diagnostic Speedometer to confirm whether the water and oil shared sensor is faulty.

First, remove the storage box by referring to the steps for dismantling the storage box. Refer to the steps for removing the throttle valve body to remove the throttle valve body to facilitate the removal of the water and oil shared sensor. D350 located on the right side of the intake manifold. M125 under the thermostat on the right side of the vehicle. First pinch the top of the plug, press down the anti-dropping card, and then unplug the plug.

The normal temperature resistance value of the two pins of a multimeter is 1.5～4.0kΩ.

Due to limited space, it is recommended to use a 72-tooth 17# ratchet wrench to remove the water and oil shared sensor counterclockwise, and remove the 9×2 EPDM rubber O-ring. New O-rings need to be replaced during reassembly to avoid leakage.

Standard torque：13±1.5N.m (1.3±0.2 kgf.m,10±1 lbf.ft)



10. Oxygen Sensor

⚠WARNING

●The oxygen sensor must be removed after the engine and muffler have cooled down completely.

When there is poor engine performance, unstable idle speed, high fuel consumption, and incorrect air-fuel ratio, check the oxygen sensor. The fault code can be read through the diagnostic Speedometer to confirm whether the oxygen sensor is faulty.

10.1 Check

Find and pull out the oxygen sensor connector at the front elbow of the muffler.

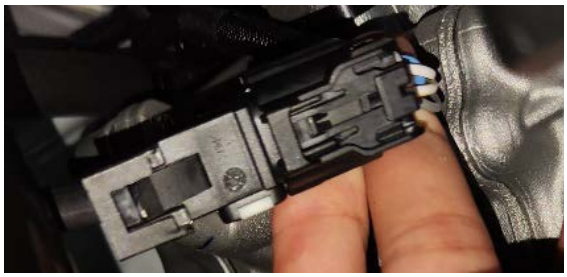

D350

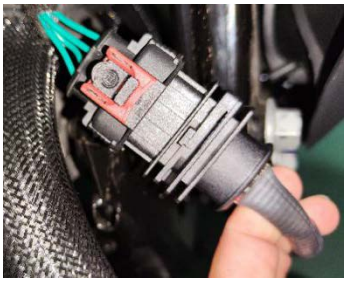

D125/D250/D155

Use a multimeter to measure the resistance of the heating element of the two wires to 9±2kΩ; (D350 are white wires, D125/D250/D155 is red and white wire); D350/D250 model can measure the current should be less than or equal to 2.1A. Otherwise, it can be judged that the oxygen sensor is faulty. The ceramic inside the oxygen sensor is hard and brittle. It is forbidden to knock with hard objects or blow with strong gas, otherwise it is easy to cause damage.

Or remove the oxygen sensor and observe the color of the top part of the head, which is normally light gray. If it is white, it means that the silicon poisoning has been damaged and needs to be replaced, if it is black, it means that there is carbon deposits that can be cleaned up and continue to use; if it is brown, it means that the silicon poisoning needs to be replaced.

10.2 Replace

D350/D368

Remove the right pedal and the right enclosure in the same way as shown in the figure according to the steps of "removing spark plugs". Remove the connector from the frame

b. Remove the tie at the bottom.

c. Find the plug shown in the figure on the left side of the intake manifold, press the anti slip snap indicated by the arrow and pull out the plug. Use a 22 # open-end wrench to remove the oxygen sensor from the muffler anticlockwise.

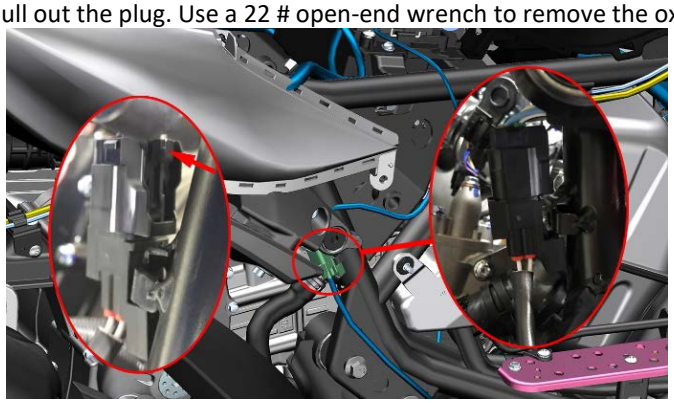



D125/D250/D155

After finding the oxygen sensor plug, first push the dark red buckle in the direction of the arrow, then hold the plug end of the oxygen sensor with one hand, press the buckle indicated by the arrow on the cable end with the other hand, and pull out the plug. Install after cleaning the installation surface.

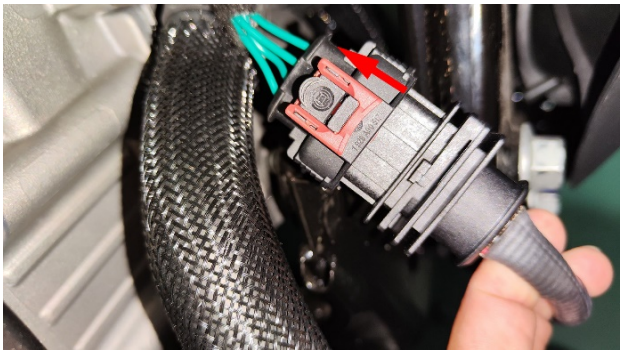

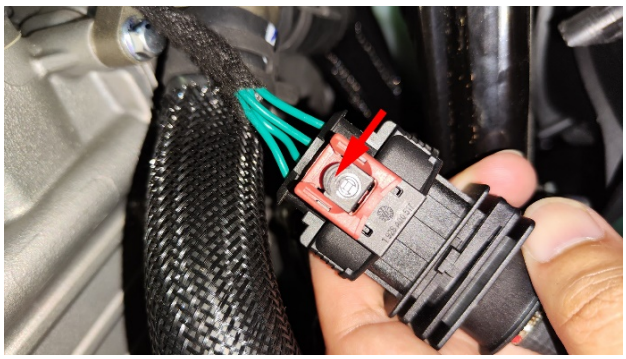

11. ECU

D350/D250/D368

When the engine cannot be started and the performance is poor, check whether the ECU is normal. Because the ECU is more complicated and difficult to judge, the elimination method can generally be used to remove the ECU from a normal vehicle of the same model and replace it with a faulty vehicle.

Refer to the steps of "Maintenance-Rear Shock Absorption-Replacement Rear Shock Absorber" and remove the right tail skirt to expose the ECU.

The index finger and middle finger are respectively located under the lever. While pressing the buckle with the thumb, turn the index finger and middle finger to the thumb direction to pull out the ECU plug. Use 5# inner hexagon to remove the bolt(1) to take off the ECU(2).

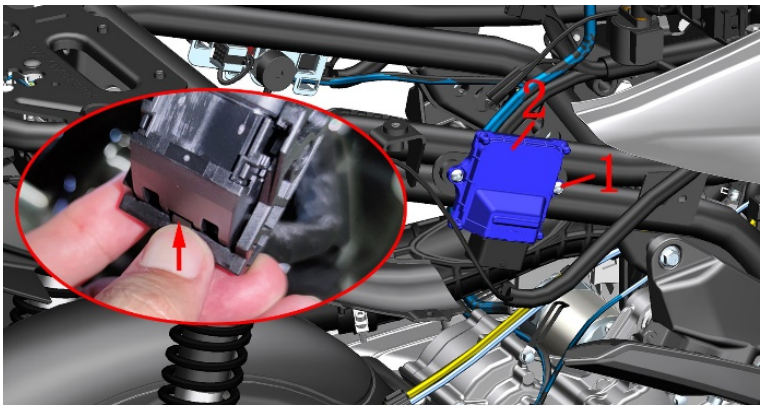

D125/D155

The ECU can only be removed after removing the rear storage box, rear armrest and rear right rear skirt. Pull out the ECU plug after pressing the buckle indicated by the arrow. Remove 2 M6×12 bolts with 4# hexagon socket to remove the ECU.

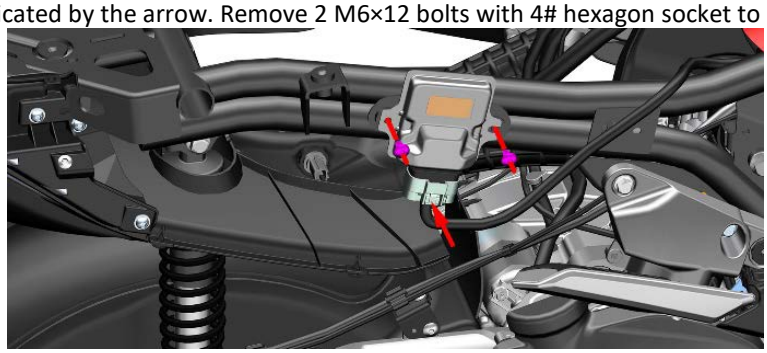

12. Crankshaft position sensor

When the engine starts without dust or is difficult to start; poor acceleration and unstable idling; when the engine is stalled intermittently, it is necessary to check whether the crankshaft position sensor is normal.

The crankshaft position sensor is installed on the right crankcase cover and integrated with the magneto stator. Locate the sensor plug on the right side of the vehicle, press the head anti-trip lock and pull it out. Use a multimeter to measure the resistance of the crankshaft position sensor① at 25°C (77F), D350 should be 150±20Ω, D150 should be 280±20Ω, otherwise it should be replaced.

In addition, the three-hole plug of the stator② of the magneto uses a multimeter to measure the phase-to-phase resistance of any two terminals at 25°C (77F), which should be 0.7±0.15Ω.

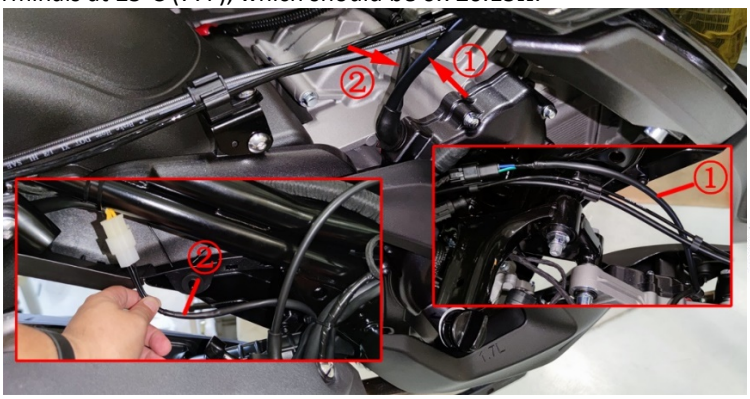



13. Starting relay (D155)

Rated voltage of starting relay: DC 12 V, operating temperature: -40 ~ + 85 ℃, operating voltage: DC4.6 ~ 7 V (20 ℃),Reset voltage DC 1.2 ~ 4.2 V (20 ℃), coil current 0.2A (12V 20 ℃) or less. Insulation resistance DC500V meg-ohmmeter above 20MΩ.

The detection method is as follows:

After pulling out the relay, use the buzzer gear of the multimeter to measure 87 a. The 30 pin should be normally closed. At this time, the buzzer of the multimeter sounds;Connect pins 30 and 87. The buzzer should not sound if it is normally open at this time.Connect pins 85 and 86 to the battery or DC12V power supply with wires, and measure whether the buzzer of pins 87 a and 30 does not sound;Measure the buzzer sound of pin 87 and 30, indicating that the relay is normal, otherwise, it is abnormal and needs to be replaced.



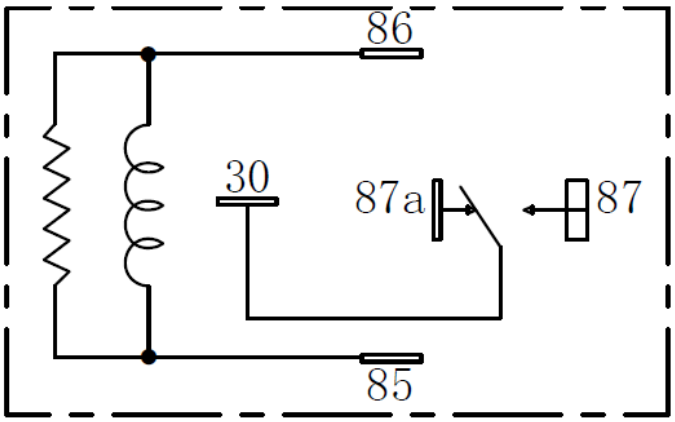

14. Relay (G8HN-1C4T-RJ) (D155)

Inside the PVC boot of the M150 rear left taillight plug are the side stand relay (model G8HN-1C4T-RJ) and the charging relay (model KH-1A4 T-R).。 The detection of charging relay is consistent with the model of EFI relay.

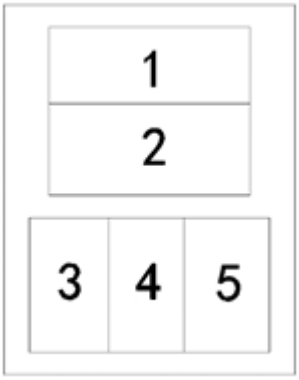



Cable end relay

After pulling out the relay, use the buzzer gear of the multimeter to measure whether the pins 1 and 4 are normally closed. At this time, the buzzer of the multimeter will ring;2 and 4 are normally open contacts without sound. Pins 3 and 5 are energized, measurement pins 1 and 4 should be disconnected, and the relay is normal when pins 2 and 4 are connected.Otherwise, it can be judged as relay failure.

The following cable end colors are for reference, subject to the actual conditions of the vehicle. The line color of different batches may be different, but the function is the same.Cable terminal color:

Wire number / Relay	1	2	3	4	5
Side support relay	Green	-	Green/ red	Light green	Black/ white

The engine cannot start and there is no sign of fault diagnosis process

When the start button is pressed and the starter motor can drive the engine to run normally, but the engine does not work normally, and there is no sign of the car, you can refer to the following diagnosis process to troubleshoot the cause of the fault.

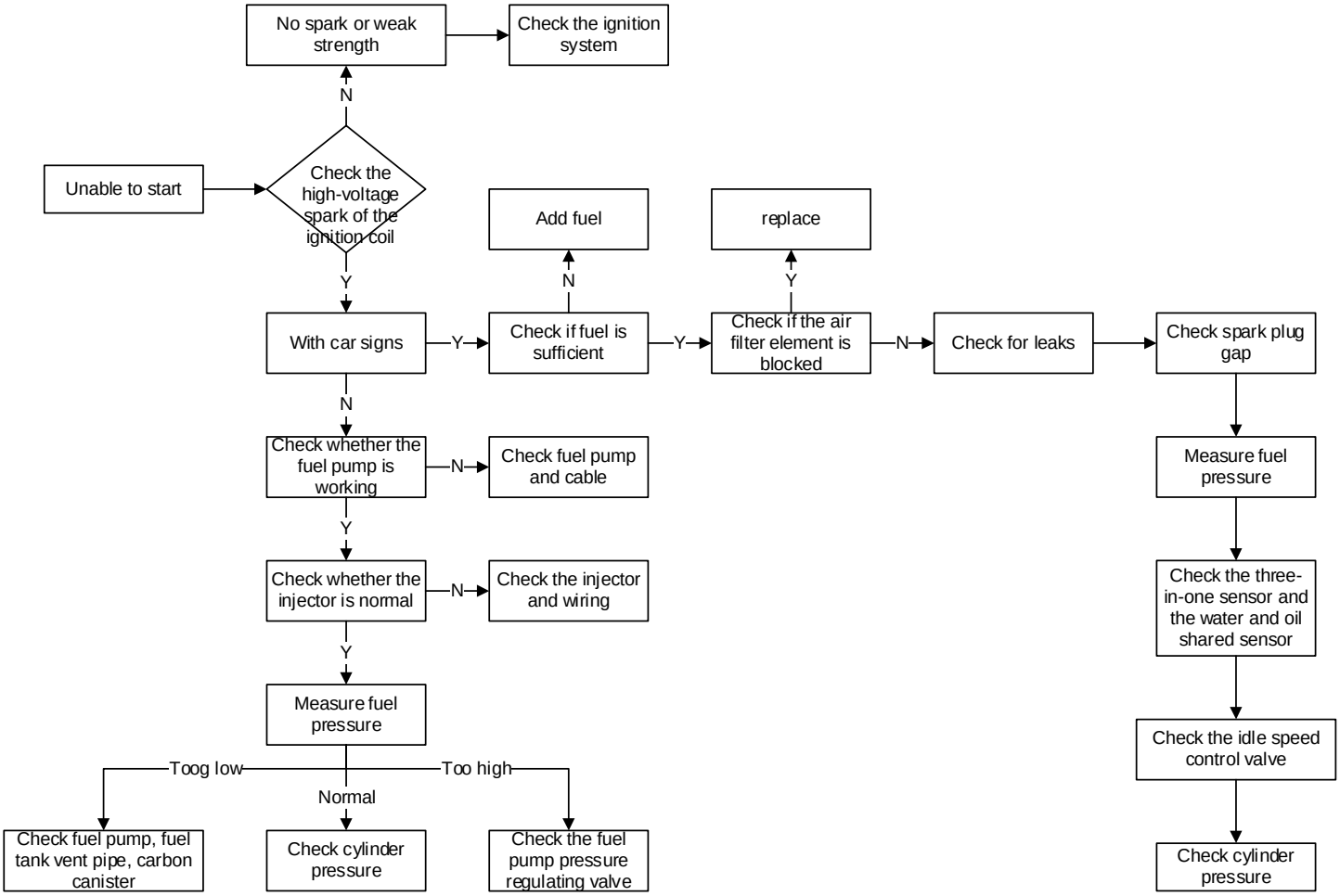

The engine cannot be started and there is a car symptom fault diagnosis process

When the start button is pressed, the starter motor can drive the engine to run normally. When there are signs of a car but cannot start, you can refer to the following diagnosis process to troubleshoot the cause of the fault.

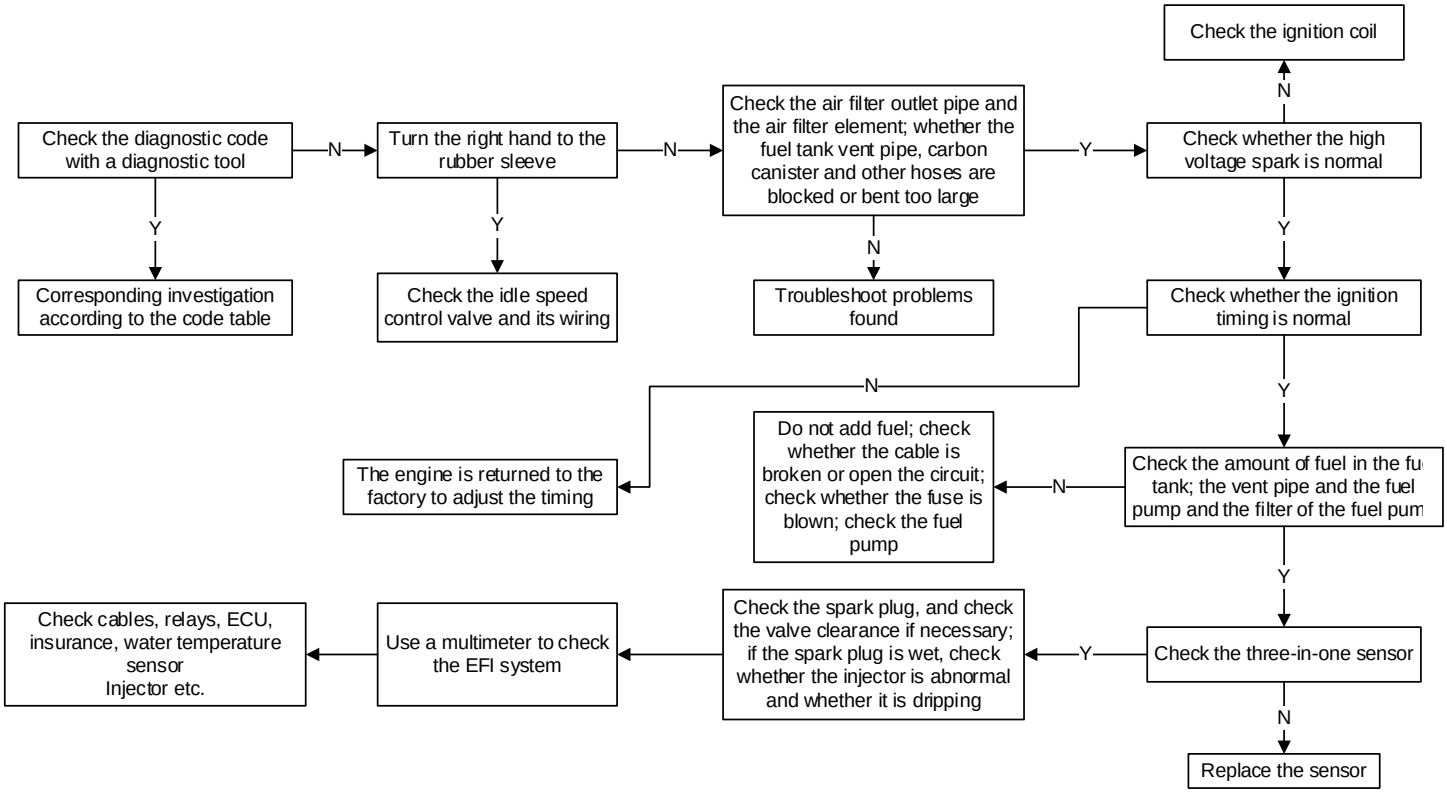

Poor acceleration

Rotate the rubber sleeve with the right hand. The engine speed cannot increase immediately, and there is hysteresis, and the acceleration is slow; you can refer to the following diagnosis process to troubleshoot the cause of the fault.

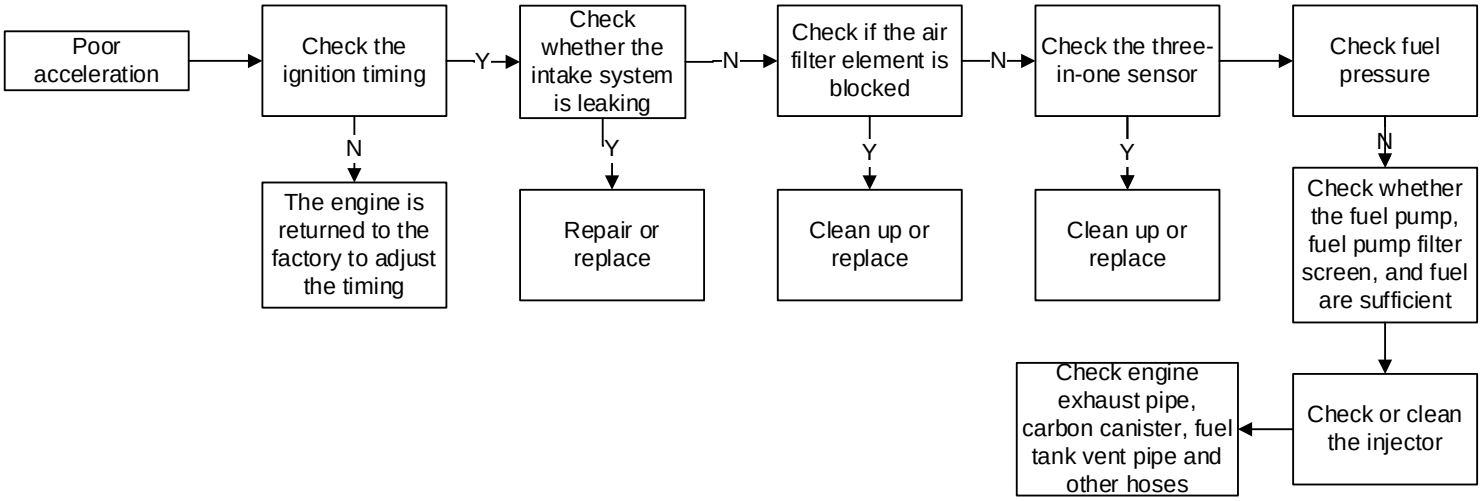

High idling speed of hot car

When a cold car occurs, it can run at a normal fast idling speed. After a hot car, the idling speed does not fall back to 1500-1700 rpm. You can refer to the following diagnosis process to troubleshoot the cause of the fault.

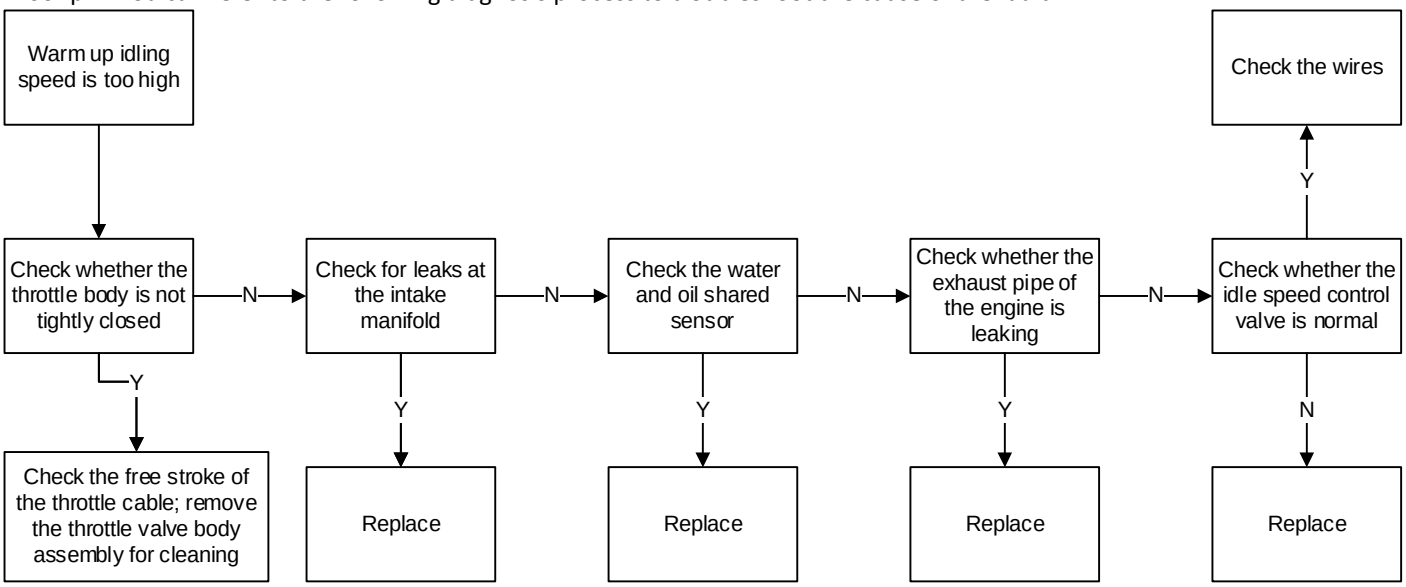

Unsteady idle speed of cooling car

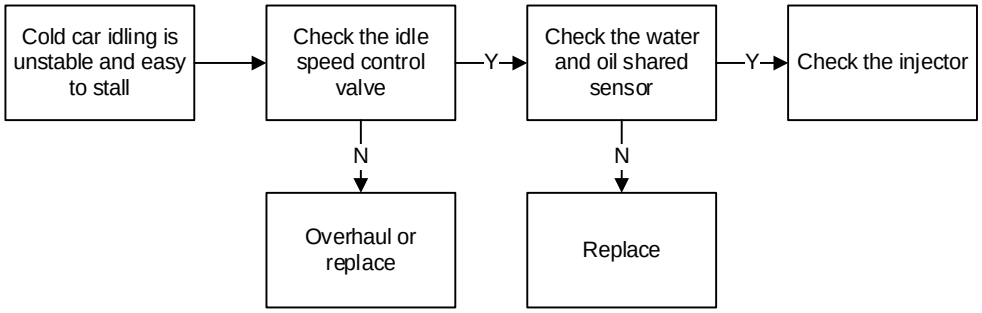

Unsteady idling, easy to cutoff

The engine is running at an unstable idling speed, easy to stall, and can return to normal after a warm car. You can refer to the following diagnosis process to troubleshoot the cause of the fault.

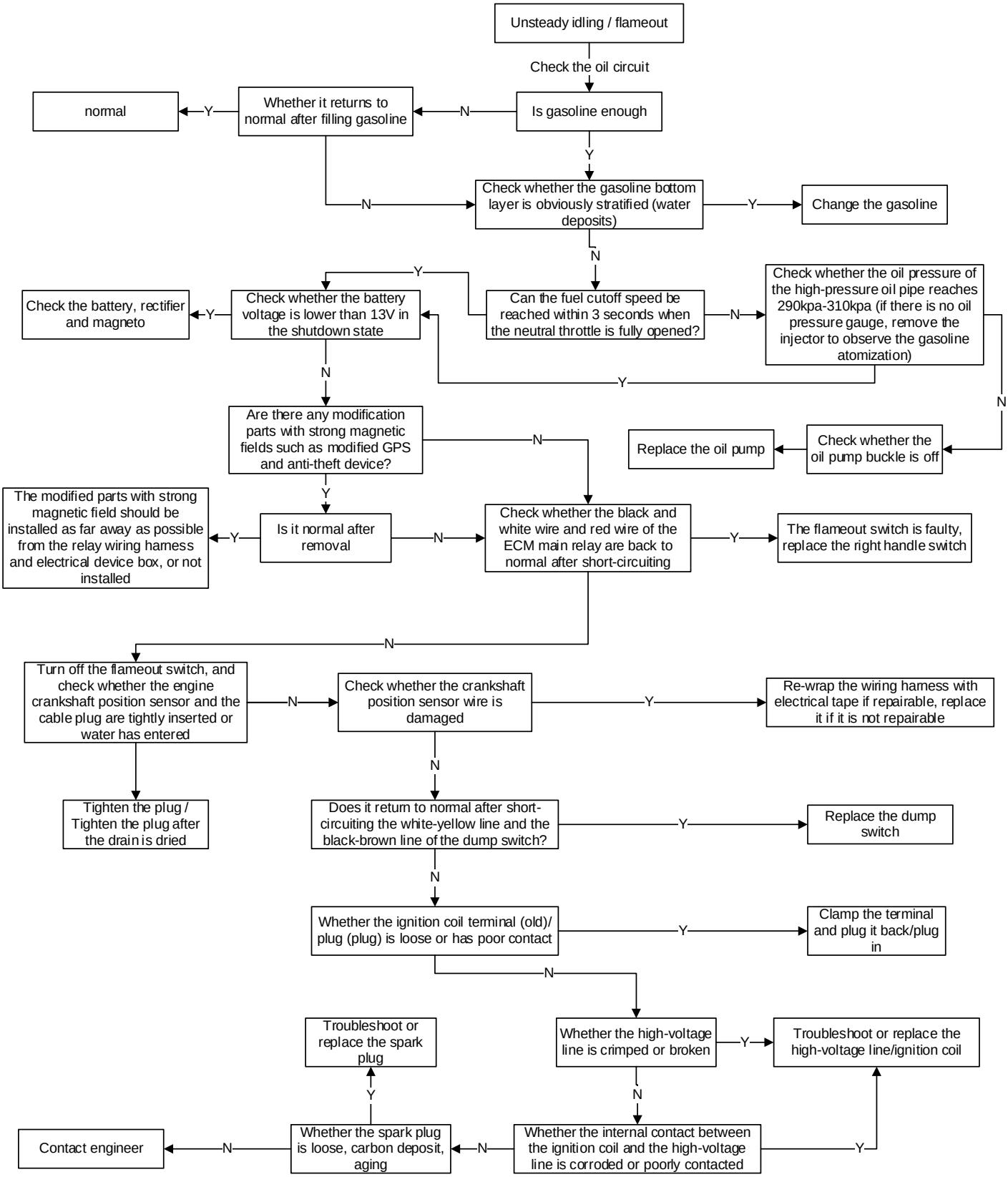

Analysis flow chart of EFI failure indicator light always on

If the EFI failure indicator light "" is always on, you should first check whether the wires of the EFI sensors are loose.

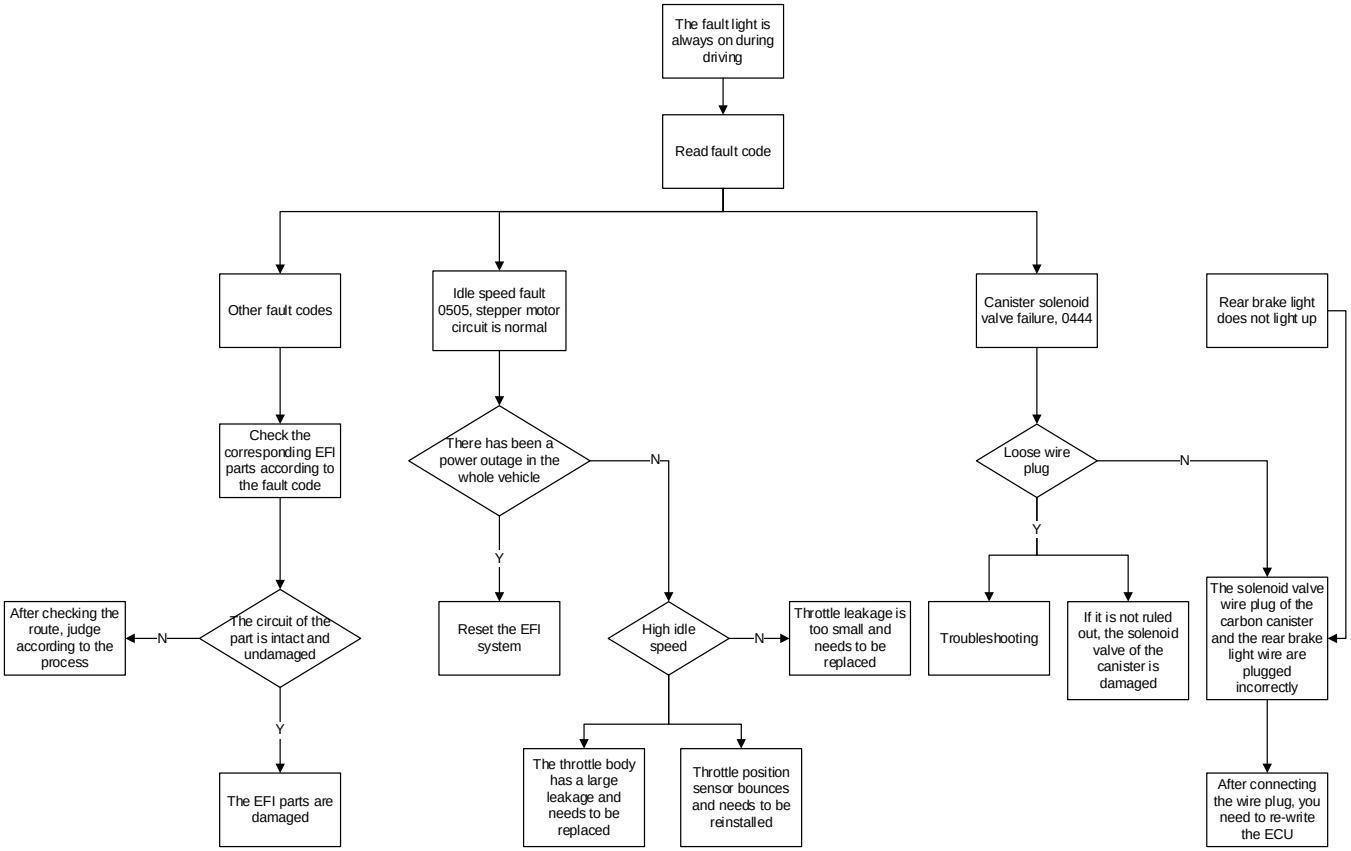

Electrical schematic diagram of EFI system

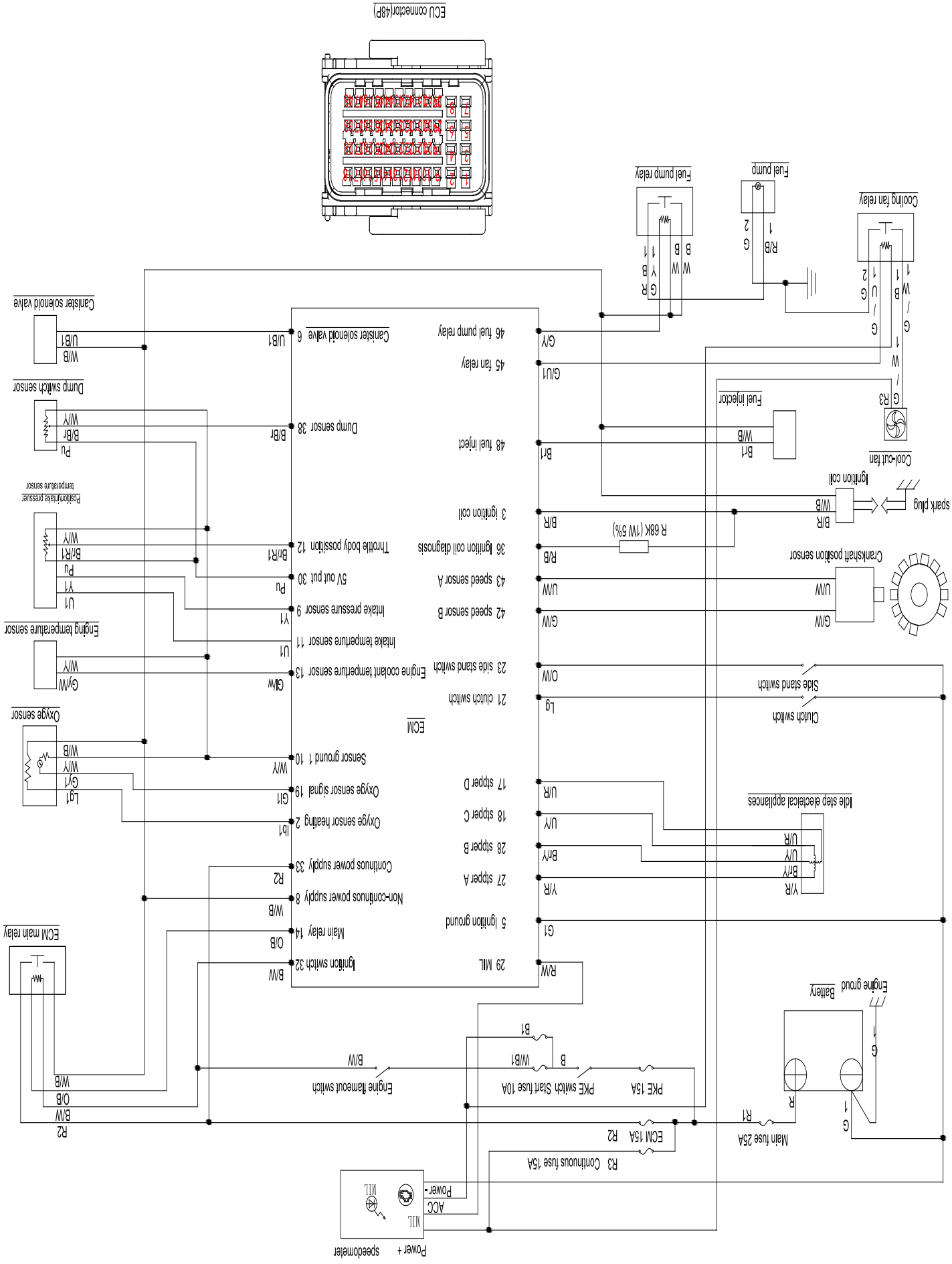

4. Ignition system

Know Before Service

1. The content of this chapter requires certain maintenance experience. It is recommended to check or repair with a qualified maintenance organization.
2. Do not disassemble the parts connected to the 12V power supply at will after power-on, to avoid the self-inductance of the coil in the electrical appliance, which may damage the ECU or sensor due to the instantaneous voltage.
3. Use spark plugs with correct calorific value. Spark plugs with improper calorific value may damage the engine.
4. Ignition system failures include poor plug connection and corrosion of wiring terminals. These two items should be checked first.
5. Since the ECU is factory preset, the ignition timing cannot be adjusted. If you need to adjust the ignition timing, you can only return to the factory for repair.
6. Ensure that the battery has sufficient power. If the power is insufficient, it may result in a slow start speed or weak spark intensity of the spark plug or no spark.

Tool：

Multimeter


7. The driving conditions and maintenance conditions of each vehicle are different, so it is impossible to list all the fault phenomena and troubleshooting procedures one by one. Only some of the more common faults can be listed. Maintenance personnel themselves also need to have certain professional knowledge and experience accumulation process.
8. See the section "Spark plug" in the chapter "Maintenance" of this manual for details of spark plug disassembly and inspection. Before disassembling the spark plug, clean up the surrounding debris and dust with a dust blower. After disassembly, the spark plug port must be blocked to prevent foreign matter from falling into the engine.

WARNING

●Do not plug and unplug the plugs of various parts at will, and it is forbidden to clean the plugs directly with water. After plugging and unplugging, be sure to check whether it is plugged back correctly.

Troubleshooting

Check the following items before diagnosing the ignition system

a. Check whether the spark plug is abnormal;

b. Check whether the ignition coil high-voltage cap or plug is loose;

c. Check whether water enters the high pressure cap;

d. If there is no spark, find the ignition coil of the same model to confirm that there is no fault and install it on the faulty vehicle to test whether there is spark;

e. Check to unlock the vehicle, turn the flameout switch to "", and measure whether the "initial voltage" of the ignition primary coil is consistent with the battery voltage when the engine is not started.

Spark plug without spark

1. Improper spark plug gap

If the gap is too small, the electrode has a "flame suppression" effect to inhibit flame generation, and the spark intensity is weak; if the gap is too large, the ignition voltage will cause no spark. D350/D250 adjust to the standard 0.8-0.9mm (0.031-0.035 in), D125/D125(2024) adjust to the standard 0.7-0.9mm (0.028-0.035in).



D350/D250



D125



D125(2024)/D155

2. A layer of oil film is attached to the surface of the spark plug electrode

Engine oil or gasoline flees into the combustion chamber and adheres to the surface of the electrode, causing the electrode to short-circuit and cause no sparks. Engine oil is generally introduced from the gap between the piston and the cylinder wall and valve guide. Check whether the gap is normal. If it is abnormal, replace the corresponding parts. The accumulated gasoline may be caused by the mixture being too thick when the cold engine is started, and it can be cleaned before trying to ignite.

3. The spark plug skirt is damaged

The high-voltage current breaks down and leaks from the damaged part of the skirt, and the spark plug needs to be replaced.

4. The electrode has carbon deposits, and the center electrode leaks electricity to the surroundings without discharging to the electrode

Excessive accumulation of carbon or oil on the electrode causes a short circuit; and may cause the insulator to burn out. Clean up carbon deposits or replace spark plugs.

5. Electrode damage

The center electrode is damaged by the electric spark or the chemical corrosion of the burning gas for a long time, and it needs to be replaced.

6. Reduced spark plug insulation

Reduced insulation performance will weaken the ignition voltage, resulting in weakened or no sparks; need to be replaced

7. Short circuit of ignition coil high voltage wire

Ignition coil needs to be replaced

8. Insufficient battery power

If the battery is insufficient, the spark strength is weak or there is no spark. Use the charger provided with the car to charge. Or charge for long-distance riding.

9. ECU failure

After the above reasons are eliminated, the ECU that has been removed from the same model vehicle can be replaced with a faulty vehicle to judge.

Ignition system layout

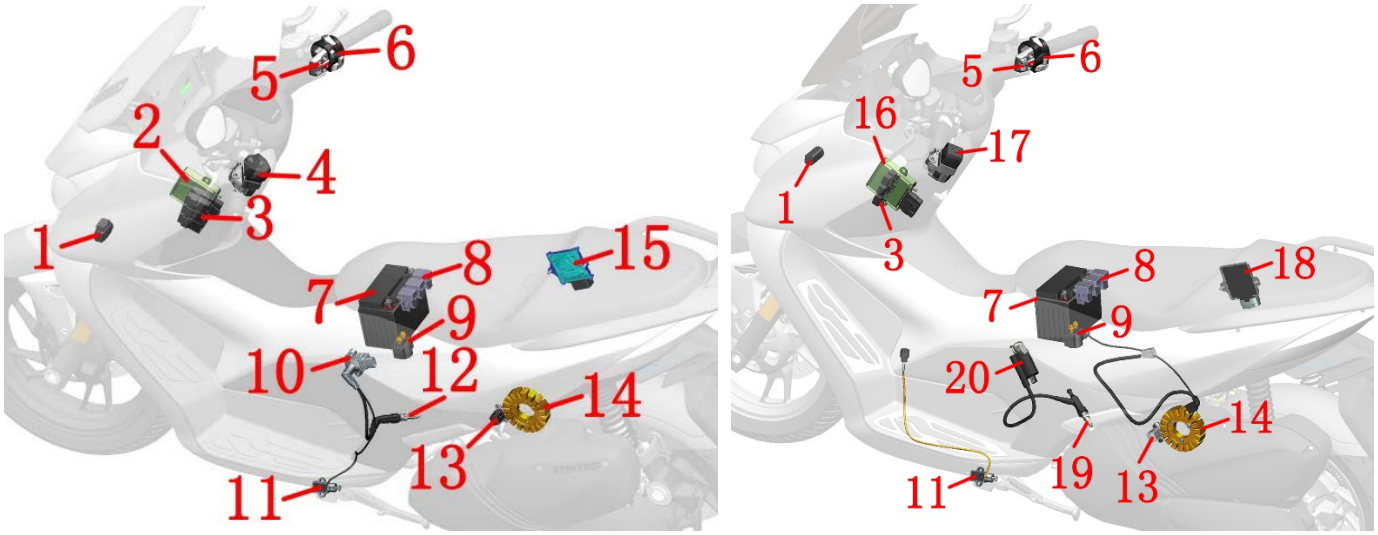

D350/D250 D125/D155

1 - Dump switch 2 - PKE 3 – relay 4 - main lock 5 - right handlebar auxiliary switch 6 - right handlebar switch 7 - battery 8 - responding box 9 - start relay 10 - ignition coil 11 - side bracket flameout switch 12 - spark plug 13 - crankshaft position sensor 14 - magneto stator 15 – ECU 16 – PKE(D125) 17 - main lock(D125) 18 – ECU(D125) 19 - spark plug(D125) 20 - ignition coil

Caution:

●The fuse box comes with the main wiring harness and there are 3 in total. For detailed illustrations, please refer to the EFI relay section in the "Electronic Injection System" chapter of this manual.

●The magneto stator and crankshaft position sensor are integrated in one part and cannot be replaced separately. For details about the troubleshooting of the crankshaft position sensor, please refer to the section "Crankshaft Position Sensor" in the "Electronic Injection System" chapter of this manual.

Electrical schematic diagram of ignition system

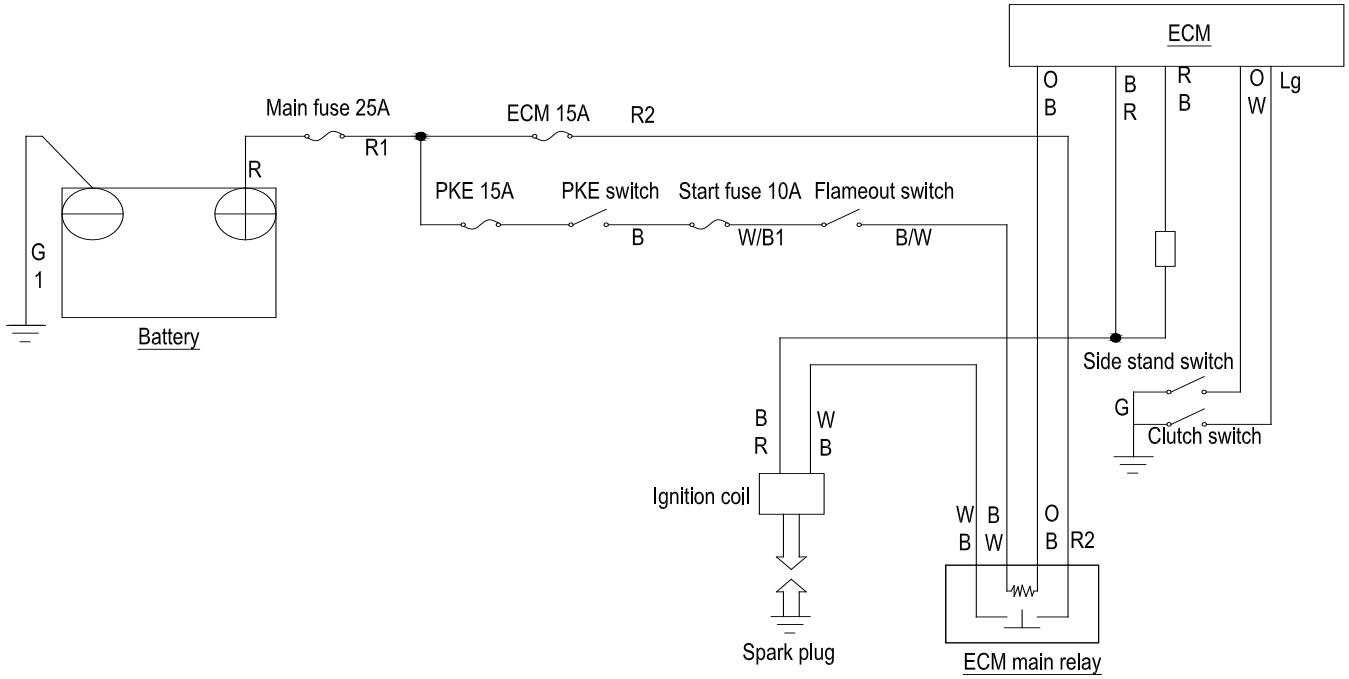

Ignition system inspection

Caution:

●If there is no spark in the spark plug, check all the cable connections for looseness or poor contact before checking the ignition system.

●Use a high-precision digital multimeter.

For details of the ignition coil test method, please refer to the section "Ignition Coil" in the "Electronic Injection System" chapter of this manual.

Pull out the high-pressure cap, find a spark plug of the same model that is confirmed to be normal, and install it on the high-pressure cap close to the cylinder head cover to do an ignition test to confirm whether the ignition coil is faulty.

Refer to the crankshaft position sensor section in the "Electronic Injection System" chapter of the "Electronic Injection System" chapter of this manual to check whether it is abnormal.

Ignition timing

Caution:

●The ignition timing is preset in the ECU before leaving the factory and cannot be adjusted. If adjustment is required, the engine can only be returned to the factory for repair.

●If the right crankcase cover and cylinder head cover of the engine are removed to check the timing, the crankcase cover gasket must be replaced; it is recommended that the cylinder head cover gasket is also replaced and the sealant should be applied to the position shown in the figure.

●Because professional tools and equipment are required to assemble, detailed step-by-step instructions are not given here, only a rough explanation.

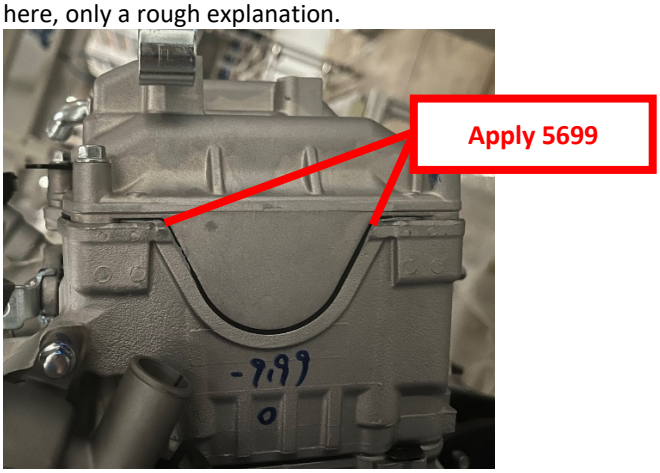

Refer to this manual for the method of disassembling the rear damping assembly of the engine's rear wheel and remove it first; then remove the peripheral parts of the engine. Pack the whole engine and return it to the factory for maintenance through logistics or express delivery.

Check：

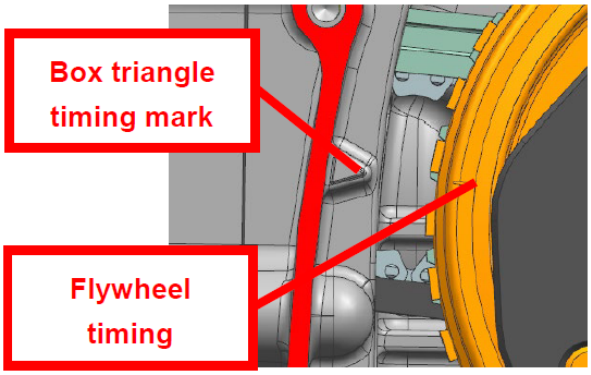

The triangle is aligned with the flywheel timing mark

Installation:

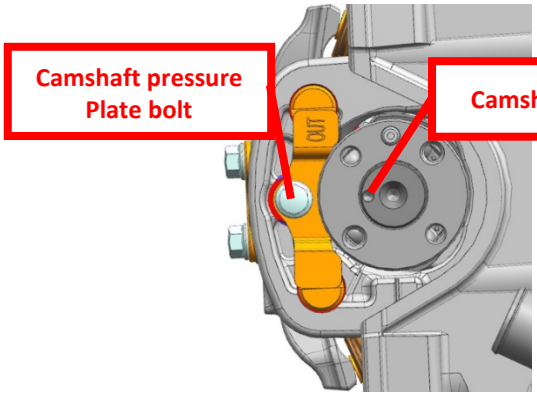

The bolt center is aligned with the dot center

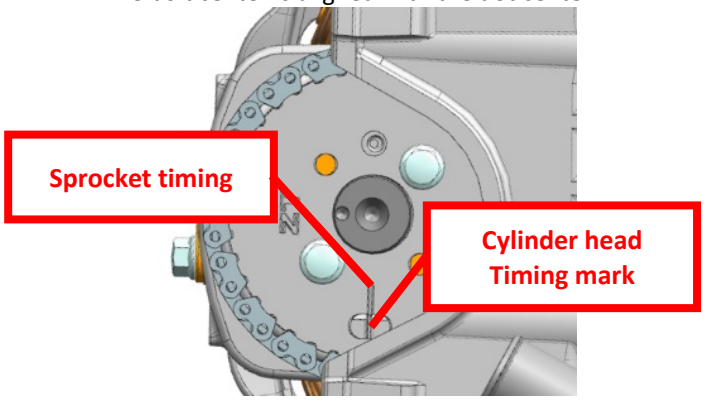

The timing of the sprocket is aligned with the timing of the cylinder head

Flywheel Checking Fixture：



Remove the rotor from the engine, install the flywheel gauge as shown in Figure 1, and check whether the marking line on the side of the rotor is in the slot (Figure 2).



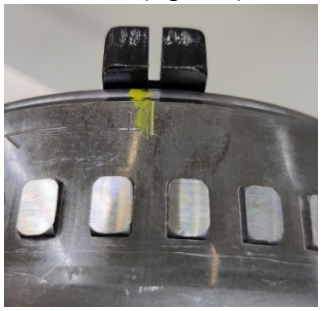

a. Align the keyway of the flywheel with the half-circle key and install the flywheel in place, put in ϕ10.3×ϕ28×4 washer, M10×1.25×45 hexagon flange bolts, screw in the threads manually, tighten the timing chain, and turn the flywheel clockwise , Align the line immediately after the "T" mark on the flywheel with the triangle mark on the box body, install the flywheel limit tool, tighten the bolts with a wind gun, and correct with a fixed torsion, and mark with an oil-based pen. Torque: 75±7N.m (7.7±0.7 kgf.m, 55±5 lbf.ft).

After the fixed-torque correction of the flywheel bolt is completed, turn counterclockwise to start the large tooth. If the rotation is flexible, the assembly is qualified. If it can't rotate or can rotate in both directions, the flywheel should be removed and reassembled and the unidirectional device should be checked. Pull the starting big tooth upwards, the axial clearance is about 0.7mm (0.028in), it is qualified.

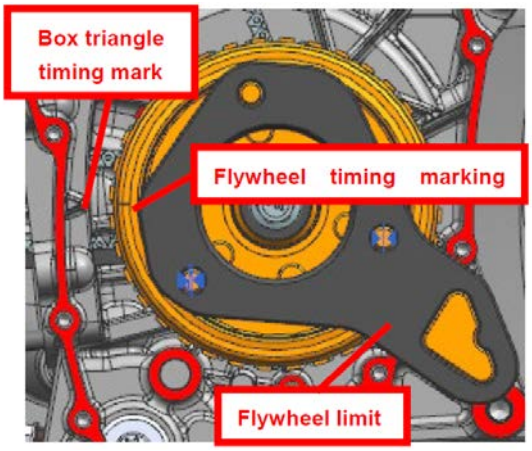

b. Tighten the timing chain, check again and align the line immediately after the "T" mark on the flywheel with the triangle mark on the box.

c. Rotate the camshaft to align the dots with the camshaft pressing plate bolts, insert the timing driven sprocket into the timing chain and assemble it on the camshaft, and at the same time, the timing of the timing driven sprocket is aligned with the timing of the cylinder head Degree mark.

d. Apply thread glue to the M6×16 bolts. After pre-tightening by the air screw, tighten it with the air screw, and finally correct it with a fixed torque wrench. Torque: 12±1.5 Nm (1.2±0.2 kgf.m, 9±1 lbf.ft) . And mark it with a marker.

e. Remove the flywheel limit tool and put it back to its original position.

f. Restore the disassembled engine parts.

g. Use the whole machine leak detection equipment to detect whether there is a leak.

h. Reinstall the rear shock absorber of the engine rear wheel back on the vehicle.

Ignition coils

For details on the disassembly and test methods of the ignition coil, please refer to the section "Ignition Coil" in the "Electronic Injection System" chapter of this manual.

5. Starting system

Know Before Service

1. If current flows through the starter motor when the engine is not started, it can be judged that the starter motor is damaged and needs to be replaced.
2. Before servicing the starter motor, turn on the engine stop switch to "" to prevent the misoperation from causing the starter motor to start suddenly and cause personal injury.
3. When the power is insufficient, the engine may not be able to start quickly, or the ignition current cannot be provided.
4. You can check or repair the startup system by referring to the steps in the troubleshooting process.

WARNING

●When the engine cannot be started, do not press the electric start button frequently. Frequent operation can cause overheating or damage to the starter motor, flooding, battery feed, etc.

Troubleshooting

Caution:

●Ensure that the battery is fully charged and in good condition.

●Check whether the main fuse (25A) and ECM fuse (15A) are blown. If the fuse is replaced with a new one and it is blown out, you need to troubleshoot the line first.

●The starting motor should work under the following conditions:

a. Unlock the vehicle;

b. Retract the side bracket;

c. Turn the engine flameout switch to "";

d. Press the start button.

Starter motor does not run troubleshooting process：

1. Starting relay

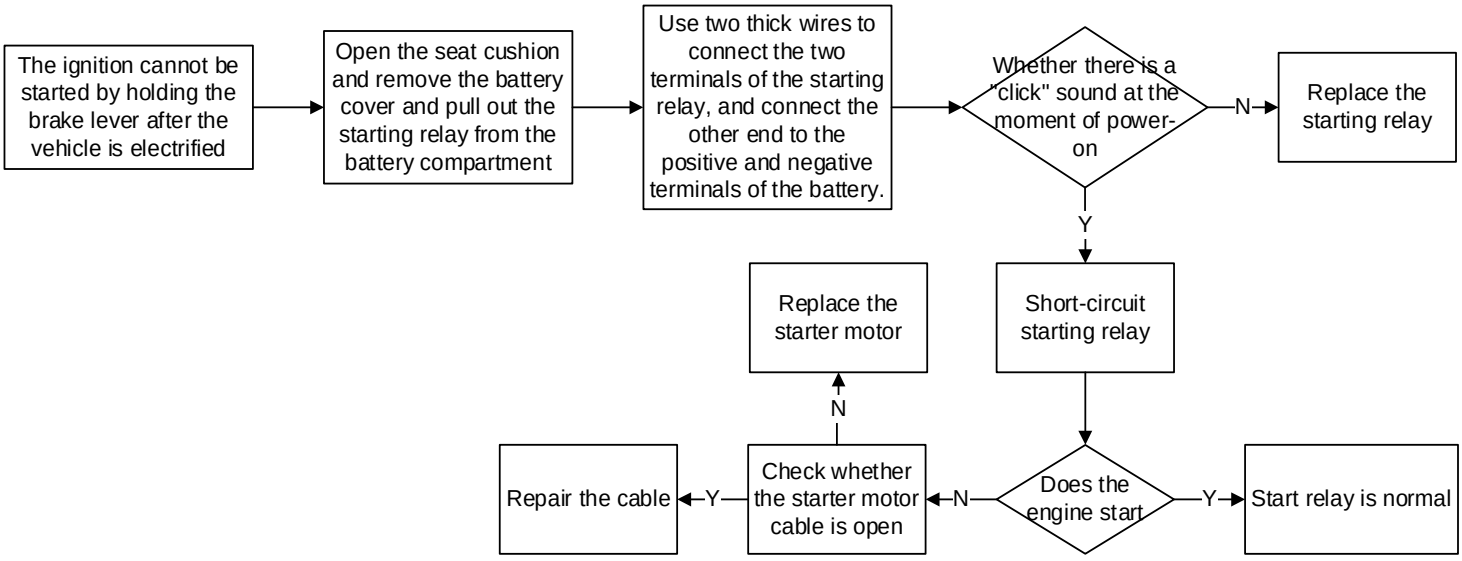

2. Starter motor

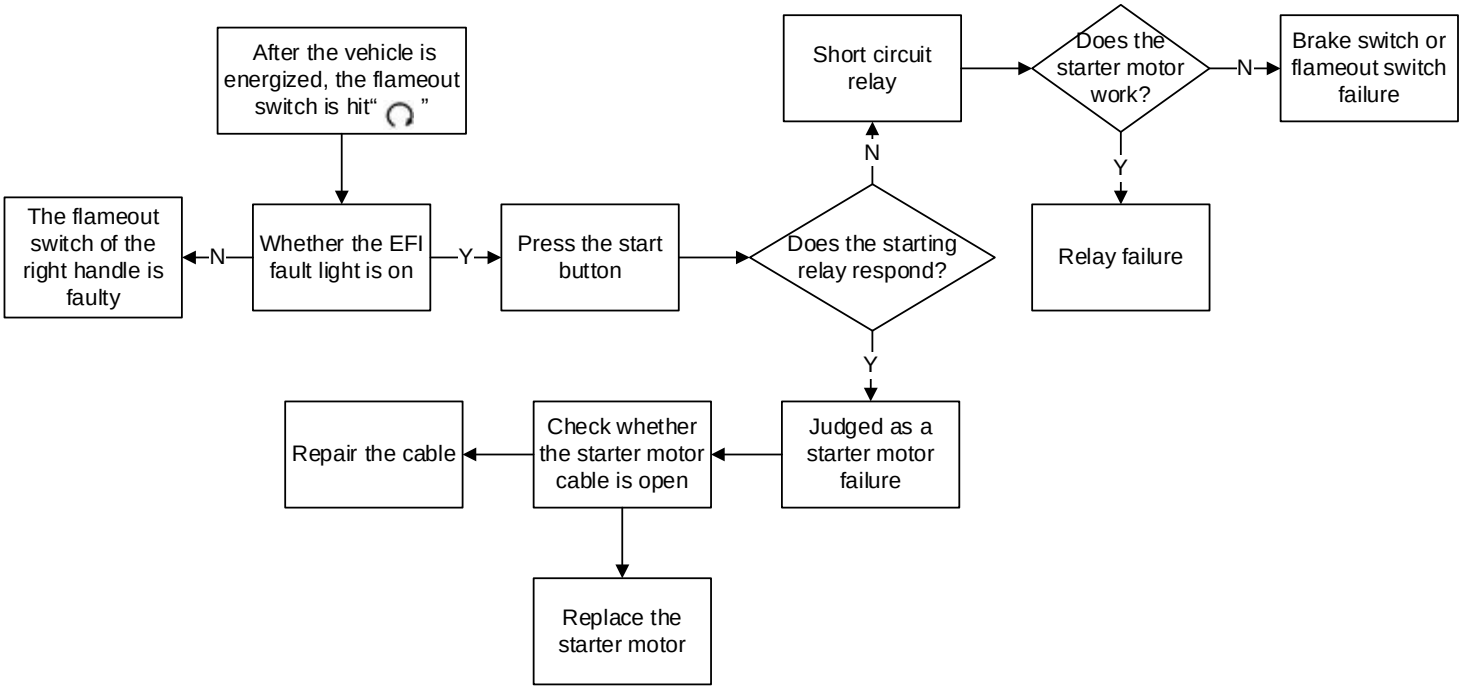

3. The starter motor runs slowly

Check whether the battery power is insufficient;
Check whether the battery cable connector is in poor contact;
Check whether the starter motor cable is in poor contact;
Check whether the starter motor is abnormal.

4. The starter motor is working normally, but the engine cannot be started

Check whether the starter gear train is faulty;
Check the ignition system for malfunctions.

Ignition system layout

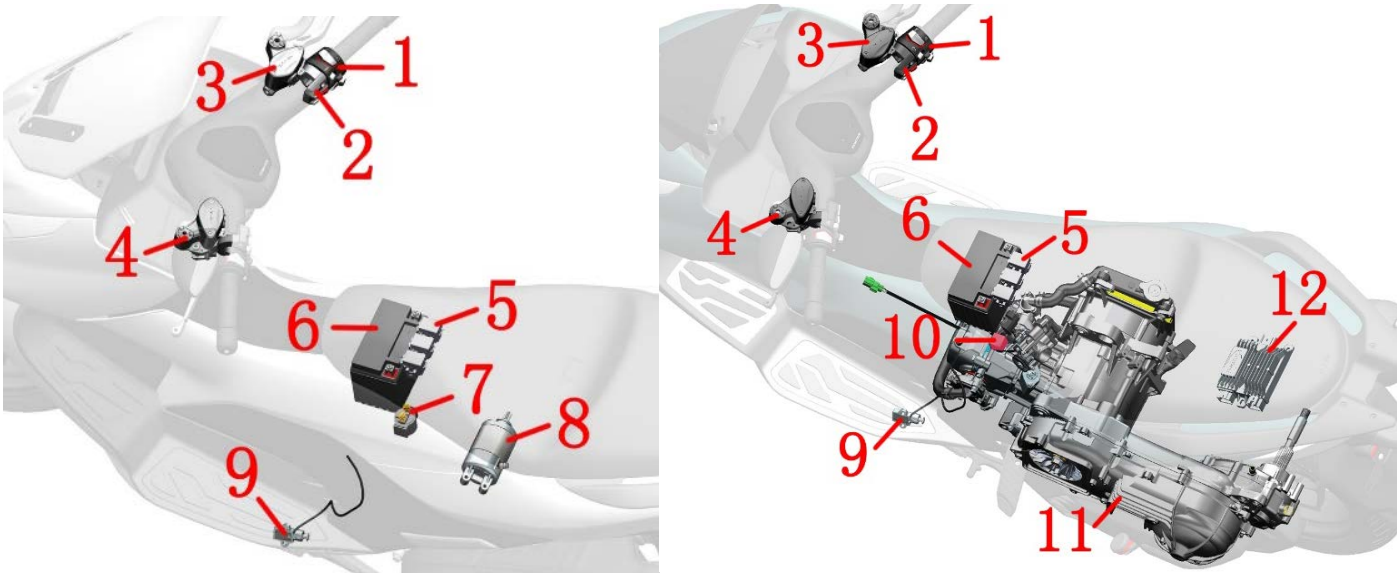

1-Right-handle switch (stop switch, start button) 2-Right-handle secondary switch (to unlock the vehicle) 3-Front disc brake main pump (front brake switch) 4-Rear disc brake main pump (rear brake switch) 5-Fuse box 6-Battery 7-Starting relay 8-Starting motor(D125/D350/D250) 9-Side bracket flameout switch 10- starter relay(D155) 11- start-stop engine（D155） 12- start-stop controller(D155)

Starting system electrical schematic diagram
D368/D350/D250/D125

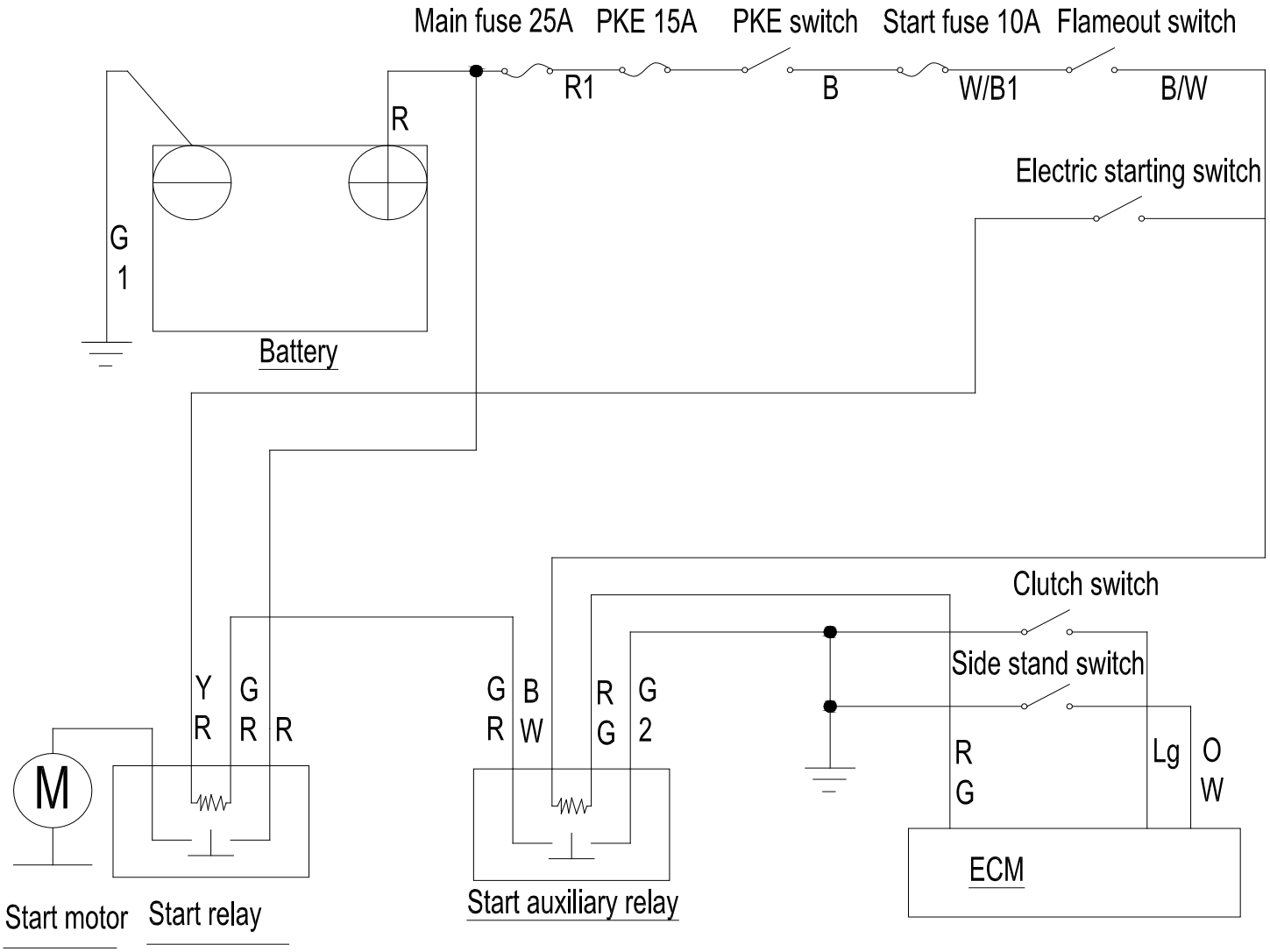

D155

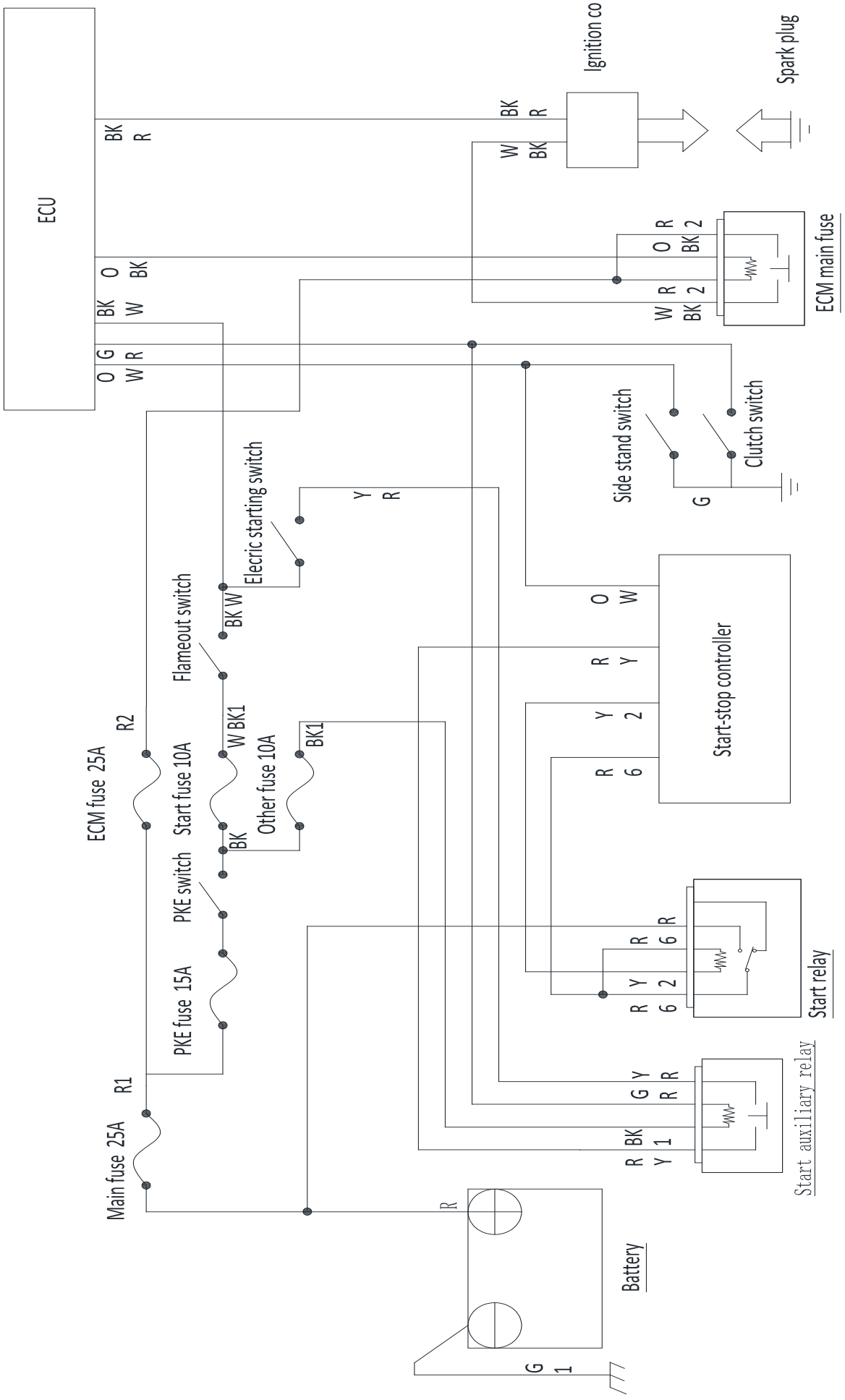
ECU
BK
R
O
BK
BK
W
O
G
W
R
Ignition co
Spark plug
BK
R
W
BK
ECM main fuse
O
R
BK
2
W
R
BK
2
Side stand switch
Clutch switch
G
Electric starting switch
Y
R
BK
W
Flameout switch
W
BK1
BK
Other fuse 10A
BK1
R2
ECM fuse 25A
Start fuse 10A
PKE switch
PKE fuse 15A
R1
Main fuse 25A
O
W
R
Y
Y
2
R
6
Start-stop controller
R
6
R
Y
6
2
R
6
R
Start relay
G
Y
R
R
BK
Y
1
Start auxiliary relay
R
Battery
G
1

Starter motor

Caution:

●If the starter motor is removed for maintenance, replace the O-ring with a new one and apply a proper amount of engine oil.

●Our company only sells starter motor assemblies, not O-rings and motor parts separately. The O-ring has an inner diameter of ϕ25mm (0.98in) and a wire diameter of 3mm (0.12in).

●The procedure for disassembling D125/D250 and D350 is the same.

1. Remove the starter motor

a. Refer to the steps of removing the rear storage box to remove the rear storage box. For the removal steps, refer to the stepping motor removal and cleaning carbon deposits in the section of the throttle valve body in the "Maintenance" chapter.

b. Untie the cable ties and clip.

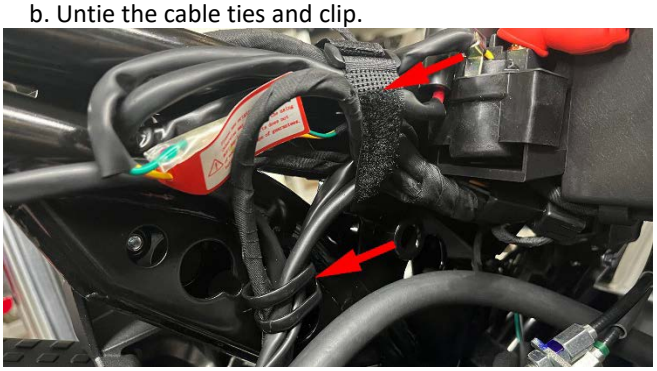

c. Loosen the clamp bolt shown in the figure with a 4# inner hexagon counterclockwise, and pull the air filter outlet pipe toward the rear wheel to pull out the throttle valve body.

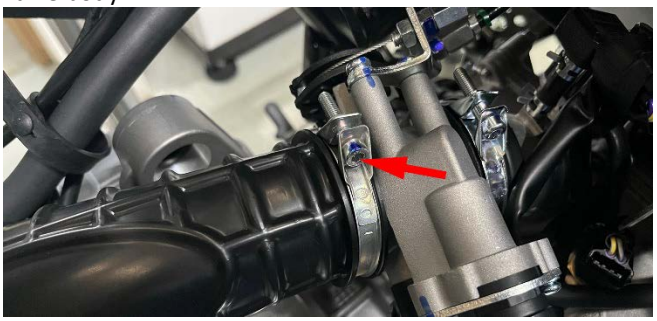

d. Pull the air outlet pipe to the right side of the vehicle to expose the two M6×30 bolts that fix the starter motor, and remove them with an 8# sleeve. After removing the bolts, remove the starter motor from the engine in the direction indicated by the big arrow.



e. When reassembling, make sure not to omit the O ring that comes with the starter motor, and align the teeth of the electric starter reduction gear. Note that the O-ring needs to be correctly assembled into the box, as it will cause leakage if cut edges occur. Torque of the two bolts for fixing the starter motor: 12±1.5 N.m (1.2±0.2 kgf.m, 9±1 lbf.ft). And mark with a marker.



2. Disassemble the starter motor

Caution:

●If the magnet tile pulls the electric pole towards the motor housing, the coil may be damaged.

●When installing the electric motor from the slot of the starter motor housing to the housing, make the commutator bar face the rear side;

●When installing the back cover of the starter motor, please align the marking line with the index line;

●When installing the front cover of the starter motor, pay attention to prevent damage to the oil seal lip of the electric drive shaft, and align the marking line of the front cover with the index line on the motor housing.

Disassemble and assemble the starter motor as shown in the figure below.

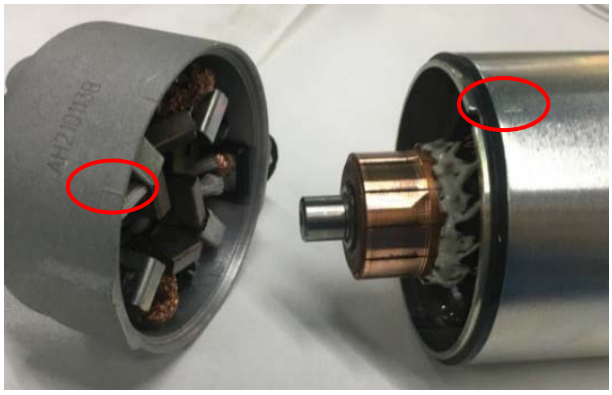



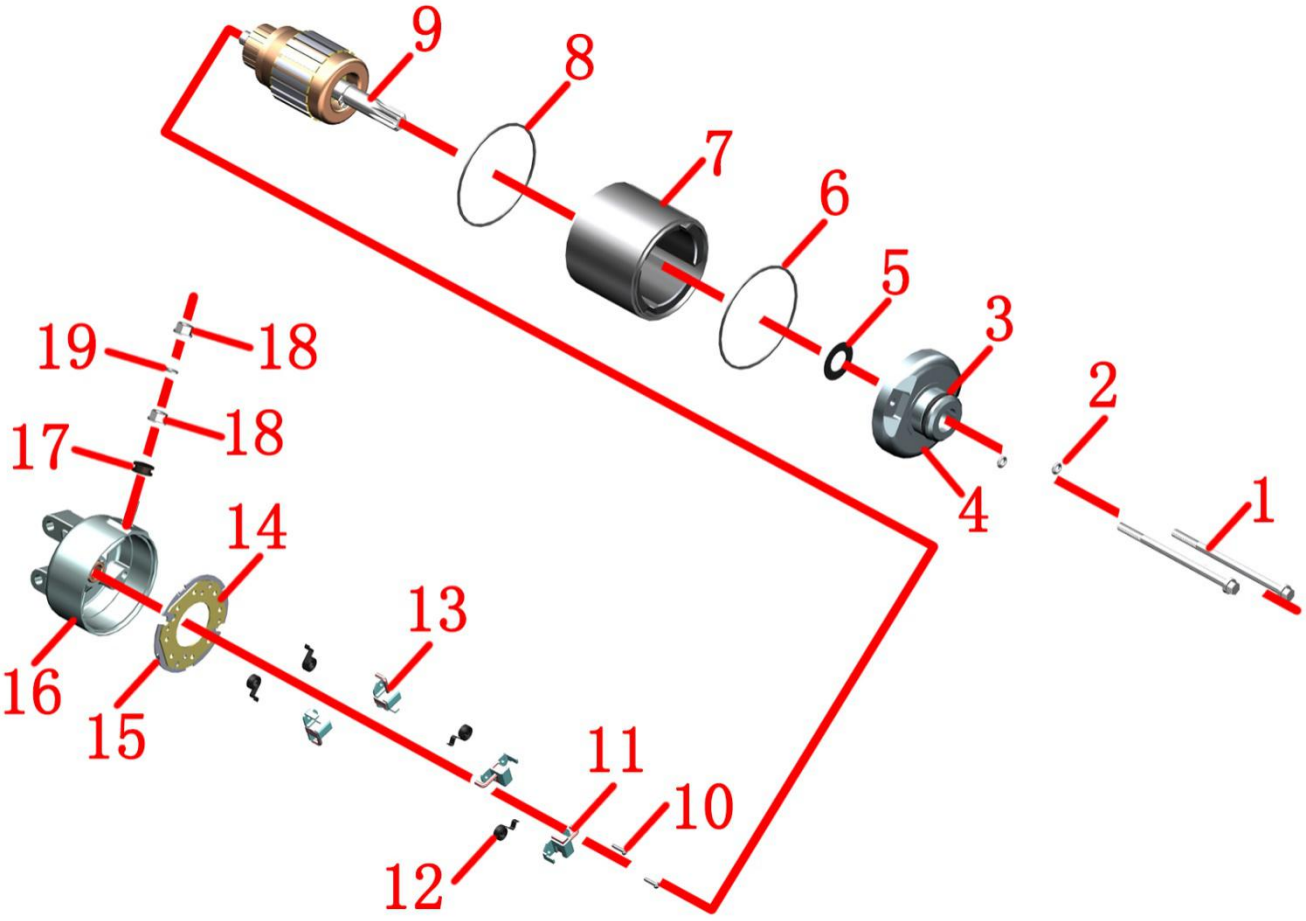

1-M6×90 bolt×2 2-O ring×2 3-O ring 4-starter motor front cover 5-gasket 6-rectangular sealing ring 7-starter motor outer shell 8-rectangular sealing ring 9-electric pole 10-screw ×2 11-Negative brush×2 12-Volute spring×4 13-Positive brush×2 14-Brush frame 15-Brush holder insulation gasket 16-Starter motor back cover 17-Insulation gasket 18-Nut×2 19- Gasket

Examination

Starter motor front cover：

Check whether the oil seal of the front cover is worn and damaged;

Also check whether the outer ring fits tightly with the front cover.



Motor back cover：

Check whether the bushing of the back cover is worn or damaged;

Check whether the brush is damaged, measure the length of the brush, and use the limit11.5mm（0.45in）.

Check the connectivity of the back cover as follows：

The positive brush is connected to the end of the cable; the cable end is not connected to the back cover; the negative brush is connected to the back cover.



Denki：

Clean the metal scraps on the electric screw, and check whether the commutator bar is discolored;
Check that there should be a gap between the commutator and the crankshaft.

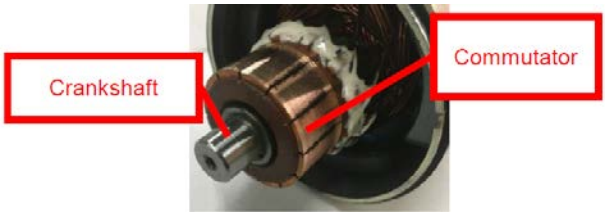

D368/D350/D125/D250Check the starting relay

1. Operation check

a. Remove the seat and rear storage box first, find the starting relay connector on the right inner side of the frame, and untie the tie.



b. Unlock the vehicle, turn the engine shutoff switch to "↻", retract the side bracket, pinch the brake handle and press the start button. You should hear the sound of the start relay picking up, otherwise you should check the start circuit.

2. Check the relay coil

2.1 Input line

Adjust the multimeter to the DC voltage 20V file (if it is an automatic range multimeter, adjust it to the DC voltage file). Insert the red test lead into the rubber sleeve of the yellow/red wire and stick it tightly to the terminal.

Unlock the vehicle, turn the engine off switch to "↻", and the black test lead can select any bolt connected to the frame nearby. When the brake handle is pressed and the start button is pressed, the voltage measured between the yellow/red wire and the ground wire should be the battery voltage.

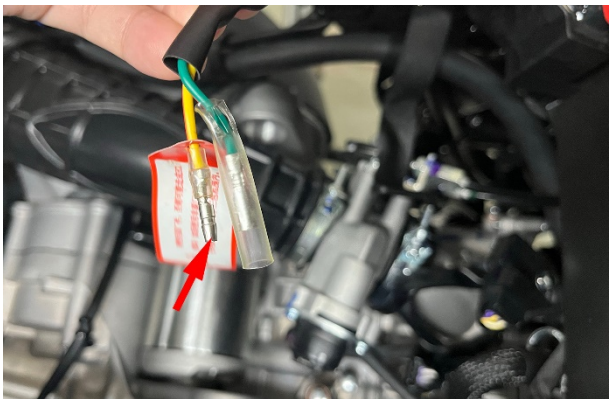

2.2 Ground wire

The vehicle is powered off and locked. Set the multimeter to the buzzer position, connect one test lead to the green/red wire, and one to any bolt connected to the frame. It should be conductive when the start button is pressed.

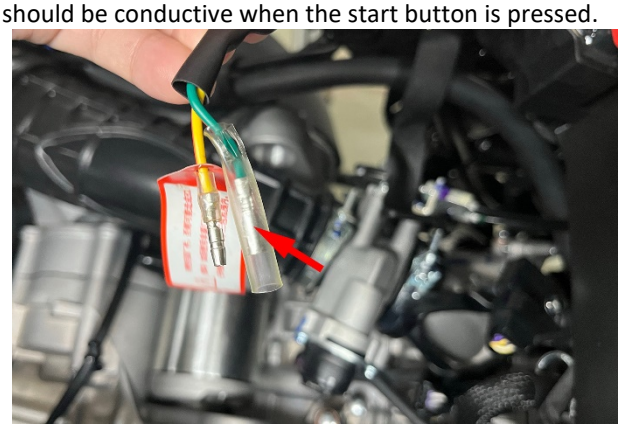

3. Check the starting relay

Use a thicker wire to directly connect the 12V battery to the relay. Use the buzzer file of the multimeter to measure the green/red and yellow-red wires, which should be conductive, and should be disconnected after disconnecting the battery.

4. Disassembly and assembly of the starting relay

Open the black protective cap of the starting relay and use a 10# sleeve to remove the self-contained M6 nut, take out the wire and screw it back to the nut to prevent loss; use the same method to remove the other end. Unplug the yellow/red and green/red wires.

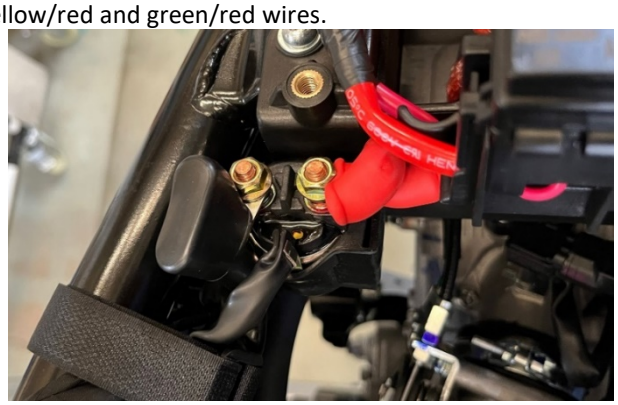

When re installing, the yellow/red and green/red wires of the relay correspond to the color of the main cable, and the nuts are not distinguished. Be sure to close the protective cap after tightening the nut.

D155 start relay

Please refer to the User's Manual provided with the vehicle for detailed instructions on starting and stopping and fault indication.

1. Starting relay

For the inspection of the starting relay, refer to the section of "Starting Relay" in Fault Diagnosis and Troubleshooting of Electronic Injection Parts in Electronic Injection System.The starting relay is located near the positive terminal of the battery and can only be removed by disassembling the battery box.



2. Start-stop controller

The start-stop controller can only be detected by a special instrument.The simple method can be used to judge whether there is a fault by removing the materials and parts of the same vehicle type and replacing them on the fault vehicle.The start-stop controller is located above the rear fender and can only be removed by removing the rear fender, tail skirt, storage box, etc.

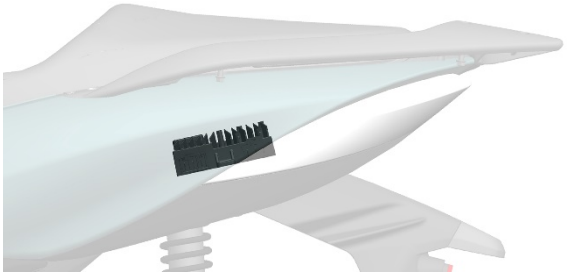

6. Fuel supply system

Know Before Service

1. Bending or twisting the control cable will affect the smooth operation, and may cause a short circuit or open circuit, causing the vehicle to lose control.
2. The operation should be carried out in an open and ventilated place. All activities that may cause sparks, such as smoking, calling on mobile phones, etc., are prohibited on the job site.
3. Before operation, release the pressure of the high-pressure fuel pipe. The method is as follows: unplug the fuel pump, start the engine and run at idling speed until the engine stops. Turn off the engine， Turn off to "", turn off the power and lock the bike.
4. Do not fully open the throttle valve body manually after removing the throttle cable, which may cause abnormal idling.
5. After removing the throttle valve body, apply masking paper or a clean non-woven fabric to block the air inlet to prevent foreign matter from falling into the engine.
6. Do not damage or operate the throttle valve body, which may cause abnormal throttle operation.
7. After removing the throttle valve body, prevent dust or foreign matter from entering the throttle hole or air passage. If necessary, it can be cleaned with dry compressed air.
8. It is forbidden to loosen or tighten the bolts or nuts that have been marked with a marker on the throttle, which may cause abnormal throttle opening and closing and idle speed control.
9. Cannot use carburetor cleaning agent.
10. Throttle valve body parts not specified in this manual shall not be disassembled.

CAUTION

●After reinstalling the battery or EFI components, reset the EFI system. For specific operations, please refer to the precautions in the driver's manual or the throttle valve body chapter of this manual.

Fuel tank removal

Caution:

●The demolition site must be ventilated and pay attention to fire prevention. See the previous chapters for specific matters, so I won't repeat them here.

●First use the oil well pump or wait until the fuel in the fuel tank is almost exhausted before disassembling.

●Be careful not to pull the nylon rope shown in the figure, forcibly pulling it may break. And our company does not sell this nylon rope separately.



●Pay attention to protect the oil outlet of the oil pump, and only pull out the high-pressure oil pipe axially. Be careful not to pull or press the oil port radially.



●The D125/D250/D155 steps are similar to the D350, taking the D350 as an example.

1. Disassemble the fuel tank assembly

a. Follow the steps in the pre-service instructions to first consume the fuel in the high-pressure fuel pipe.

b. Refer to the steps for removing the cover first to remove the outer cover of the fuel tank, the side cover, the pedal and other plastic appearance parts. Remove the Anti-Vibration plate. Remove the bolt (2) at the water pipe bracket with 4 # socket head, and then remove the 3 bolts fixing the footrest on the right side with 10 # socket.

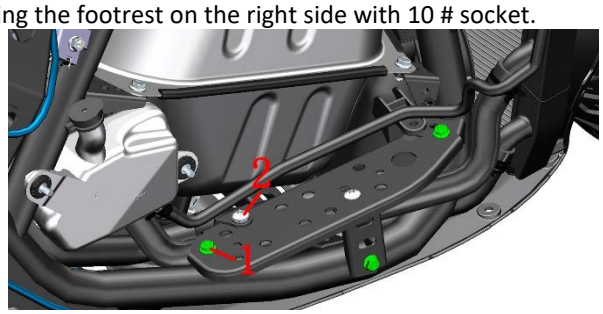

c. Press the anti-trip buckle of the plug of the oil level sensor and pull out the plug.

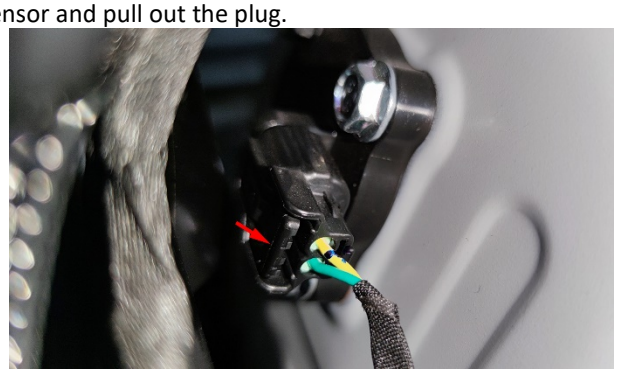

d. Remove the oil pump plug in the same way. Pinch the snorkel clamp and move it down, and pull out the snorkel. Press the anti-release buckle of the high-pressure oil pipe at the end of the oil pump, and pull the high-pressure oil pipe along the axis of the oil outlet of the oil pump.

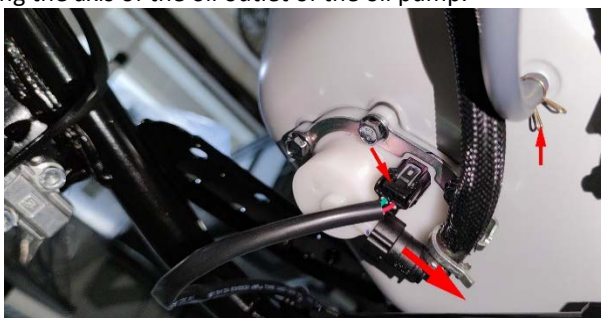

e. Use needle-nose pliers to slightly clamp the cable tie and push it up to remove it from the bracket.

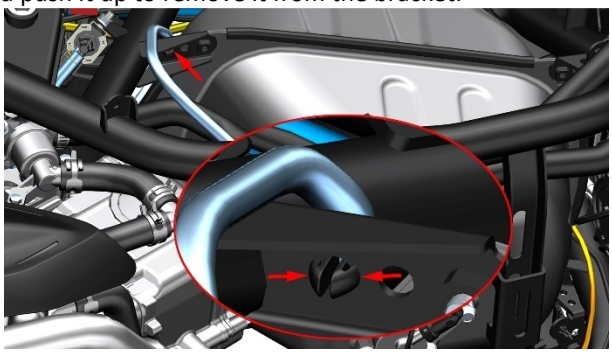

f. Use a 10# sleeve to remove the 4 M6×12 bolts (1) that fix the fuel tank.

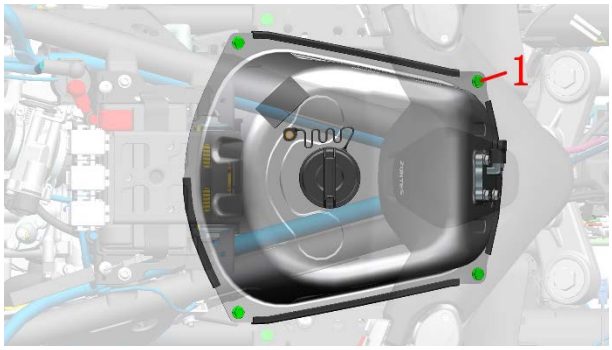

g. After confirming that the high-pressure oil pipe, vent pipe and oil level sensor plug have been unplugged, stand on the right side of the vehicle to facilitate the removal of the fuel tank assembly. Hold up the fuel tank assembly and turn it clockwise (as shown in Figure 1), while turning, let the seam welding on the right side of the fuel tank go down to the bottom of the bracket (as shown in Figure 2). Turn clockwise about 90 degrees and turn the fuel tank assembly forward (as shown in Figure 3). After adjusting the position continuously, remove the fuel tank assembly (see Figure 4). Because it is difficult to describe the process in detail, it takes many patience to try.





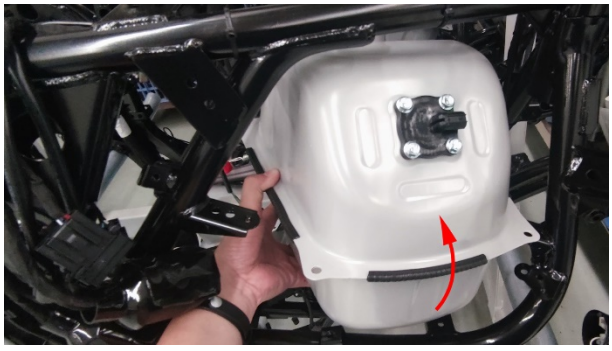



2. Disassemble the fuel pump

Turn the fuel tank assembly over and place the fuel pump facing upwards firmly. The small wooden stool can be turned over to ground the surface of the stool and put the fuel tank assembly on.

Loosen 5 bolts(1) diagonally with a 10# sleeve, grasp the high-pressure oil pipe bracket(2), and remove the bolt(1) completely.

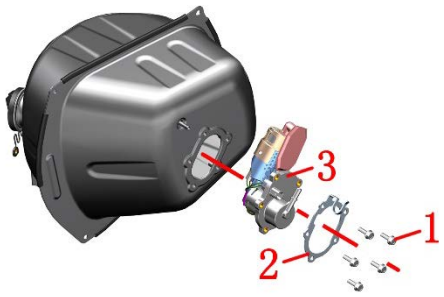

When re-assembling, you need to pre-tighten the corners and then tighten the 5 bolts. Otherwise, the uneven compression of the sealing rubber ring of the fuel pump will easily cause leakage and cause safety hazards.

Caution:

●Early production vehicles do not contain brackets(2), you can purchase and install them by yourself.

●The length of the bolt without bracket (1) is M6×16, and the length with bracket is M6×20.

●The fuel pump is a precision component that needs to be assembled in a dust-free workshop and requires rigorous testing, so it is forbidden to disassemble it by yourself. Therefore, the decomposition process of the fuel pump is not explained here.

3. **Remove the oil level sensor**

Place the removed fuel tank assembly. It is recommended to protect the fuel pump at the bottom of the fuel tank.

Use a 10# sleeve to remove the 4 M6×16 bolts(1), and pull the sensor(2) out. Be careful not to pull it forcibly to avoid the deformation of the float connecting rod, which will cause the deviation of the oil volume display to increase.



When reassembling, you need to pre-tighten the corners and then tighten the 4 M6×16 bolts. Otherwise, the uneven compression of the sealing rubber ring of the oil level sensor may cause leakage and cause safety hazards.

4. Remove the external parts of the fuel tank assembly.

a.Take off the 4 segments directly(1).

b.Press down the fuel tank cap(2) and then rotate it counterclockwise to remove it.

c. The battery rubber pad (3) is pasted on the shell of the fuel tank, which is difficult to remove. If you need to remove it, you can use a heat gun to heat it and tear it off, or use a cleaning agent that removes the adhesive to remove it.



Examination

1. Fuel pressure test

Refer to the fuel pump section in the "Maintenance" chapter for the test method.

2. Fuel pump inspection

Unlock the vehicle, turn the engine stop switch to "", you should be able to hear the sound of the fuel pump running. If you don't hear the fuel pump running sound, turn off the engine and turn off the power first.

Refer to the steps in the "Maintenance" chapter to replace the high-pressure oil pipe first to remove the surrounding bottom plate. Refer to the previous fuel tank removal steps to unplug the fuel pump.

Use a multimeter to measure the voltage of the fuel pump plug cable end, unlock the vehicle, and when the engine stop switch is turned to "", the fuel pump will accumulate pressure for about 5 seconds, during which time the battery voltage should be able to be measured.

If the battery voltage can still be measured without starting the engine after the pressure accumulation is completed, check whether the fuel pump relay is normal. If the relay is normal, the fuel pump needs to be replaced if it is abnormal.

3. Oil level sensor

Use the resistance file of a multimeter to measure the resistance. The lowest position (empty oil): 287～313Ω, the highest position (full oil): 27～79Ω.

Pull the float connecting rod, there should be no jamming phenomenon and good contact of the contacts during the rotation process.

Check the appearance of the float, and there should be no damage.

7. Cooling system

Know Before Service

1. Please refer to the radiator section of the "Maintenance" chapter of this manual for the corresponding precautions for the coolant (antifreeze).
2. Check the cooling water pipe; check the height of the cooling liquid, adding and discharging the cooling liquid have been described in detail in the radiator section of the "Maintenance" chapter, and this chapter will not be repeated.

Tool:

			
Hoop clamp	Multimeter	Air source with adjustable air pressure	Homemade cover*

*It can be blocked with a soft rubber plug, or folded in half with a hose and tied up with a rope or wire as a plug for the small pipe to test the sealing of the water tank filling port. You can find a water pipe with an inner diameter of 16mm to cut off a section, and use a suitable air pipe joint and clamp to assemble it firmly at the other end to test the air tightness of the water tank filling port, the main water tank, and the small water tank.

WARNING

●When the engine is not completely cooled, opening the water tank cover may cause the coolant to spray out and cause burns. The water tank cover must be opened after the water tank and engine have cooled down.

Troubleshooting

1. The engine temperature is too high:

a. The coolant temperature of the meter is abnormal or the water temperature sensor is abnormal;
b. The thermostat is abnormal;
c. Insufficient coolant;
d. The radiator, water pipe, and water tank are blocked;
e. There is air entering the cooling system;
f. The cooling fan is faulty;
g. Cooling fan relay failure (see the EFI relay section in the "Electronic Fuel Injection System" chapter).

2. The engine temperature is too low:

a. The coolant temperature of the meter is abnormal or the water temperature sensor is abnormal;
b. The thermostat is abnormal;
c. The cooling fan relay is faulty (see the EFI relay section in the "Electronic Fuel Injection System" chapter).

3. Coolant leakage

a. Water pump seal failure;
b. O-ring is damaged or aging failure;
c. The radiator cover is damaged;
d. The gasket is damaged or aging failure;
e. Water pipe rupture;
f. The radiator is damaged.

Coolant system distribution map
D368/D350/D250

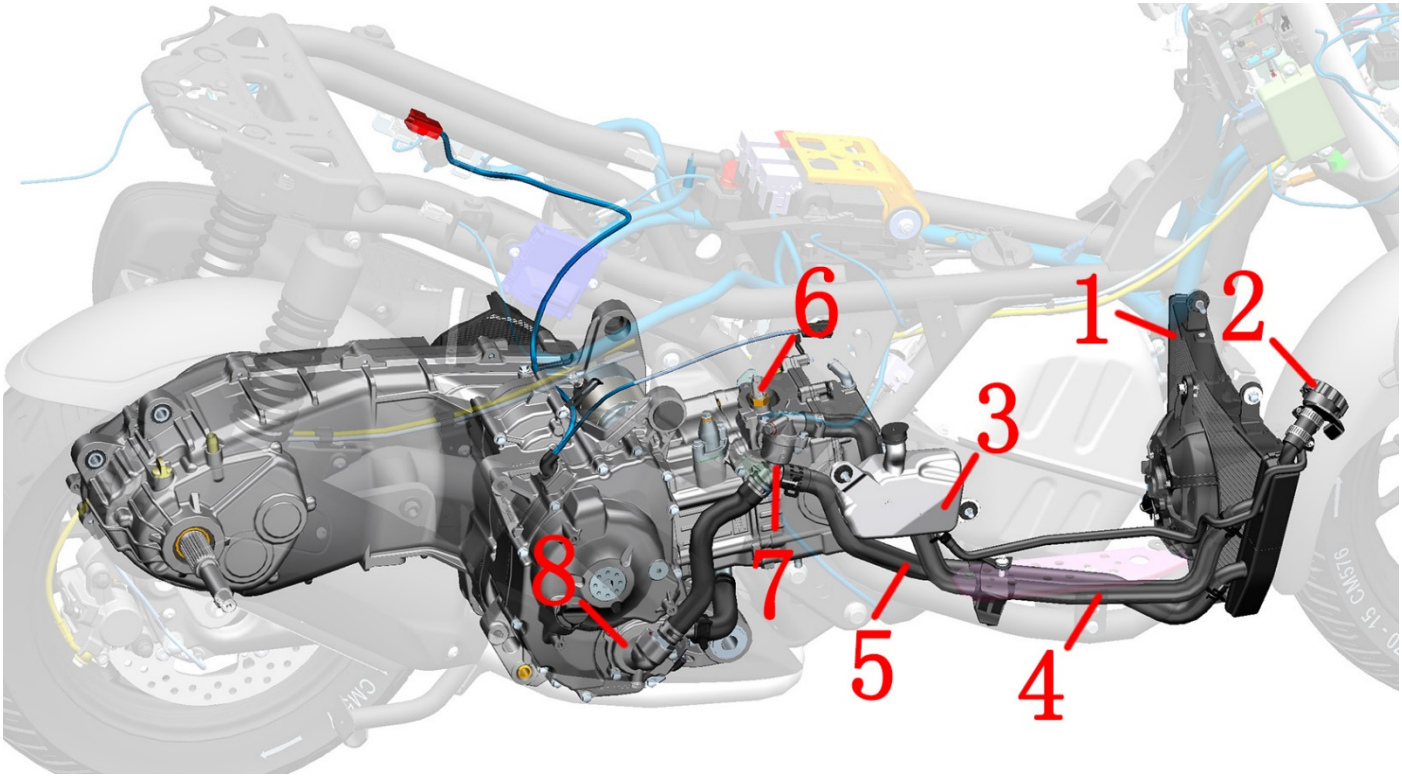

1 - Main water tank 2 - Water tank filler 3 - Auxiliary water tank 4 - Water inlet pipe of main water tank 5 - Water outlet pipe of main water tank 6 - Water oil shared sensor 7 - Thermostat 8 - Water pump cover assembly

D125/D155

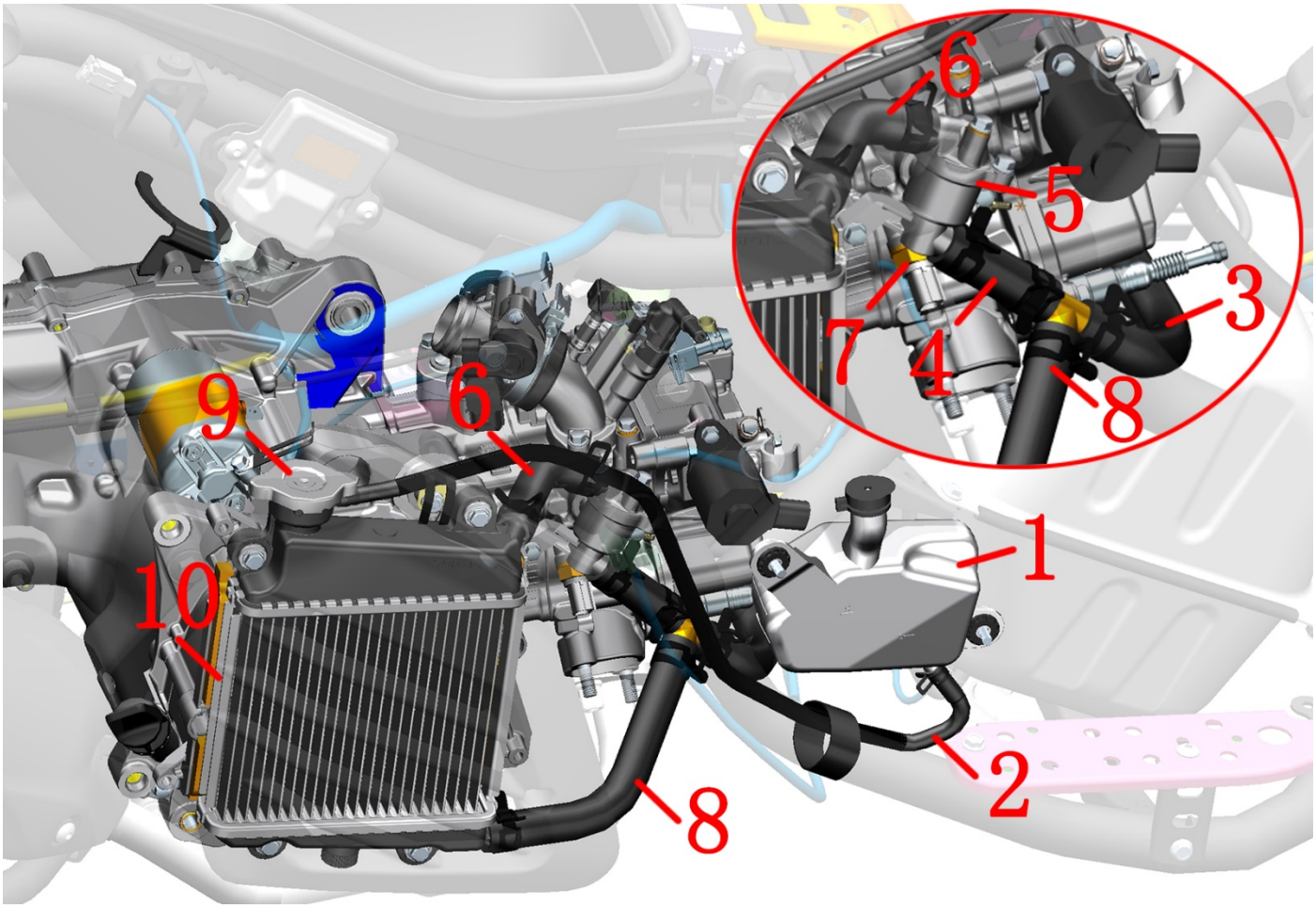

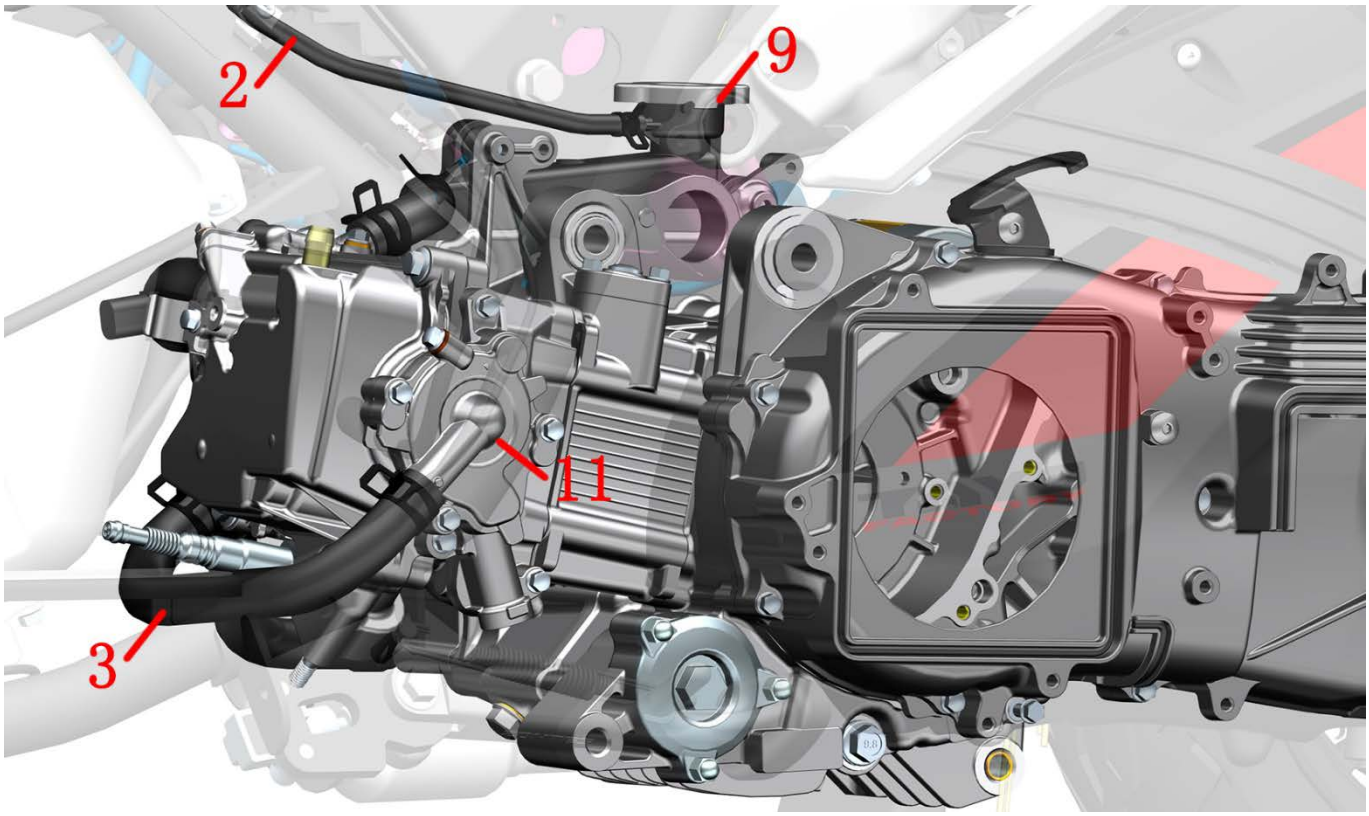

1- Secondary water tank 2-Secondary water tank link pipe 3-Engine inlet pipe 4- Thermostat outlet pipe 5- Thermostat 6- Water tank inlet pipe 7- Water and oil shared sensor 8- Water tank outlet pipe 9- Water tank filling port 10- Radiator assembly 11- Water pump cover assembly

D368(ETC)

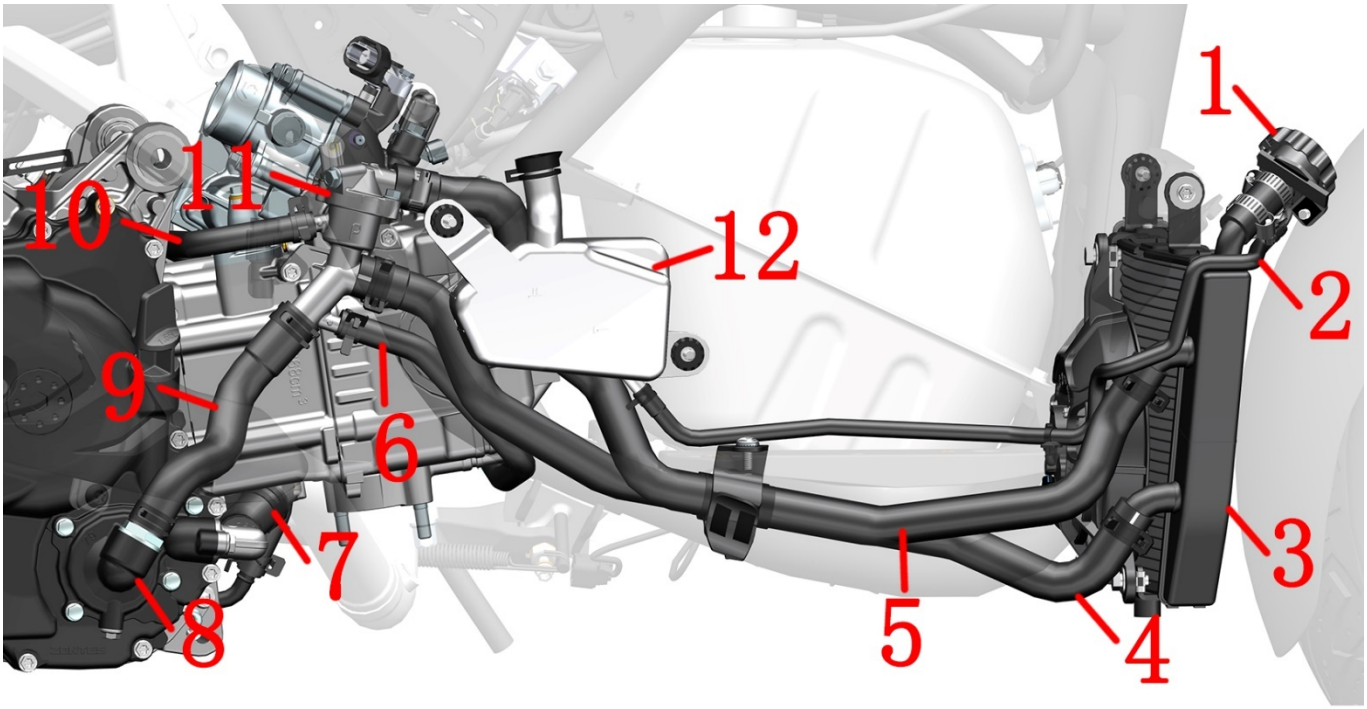

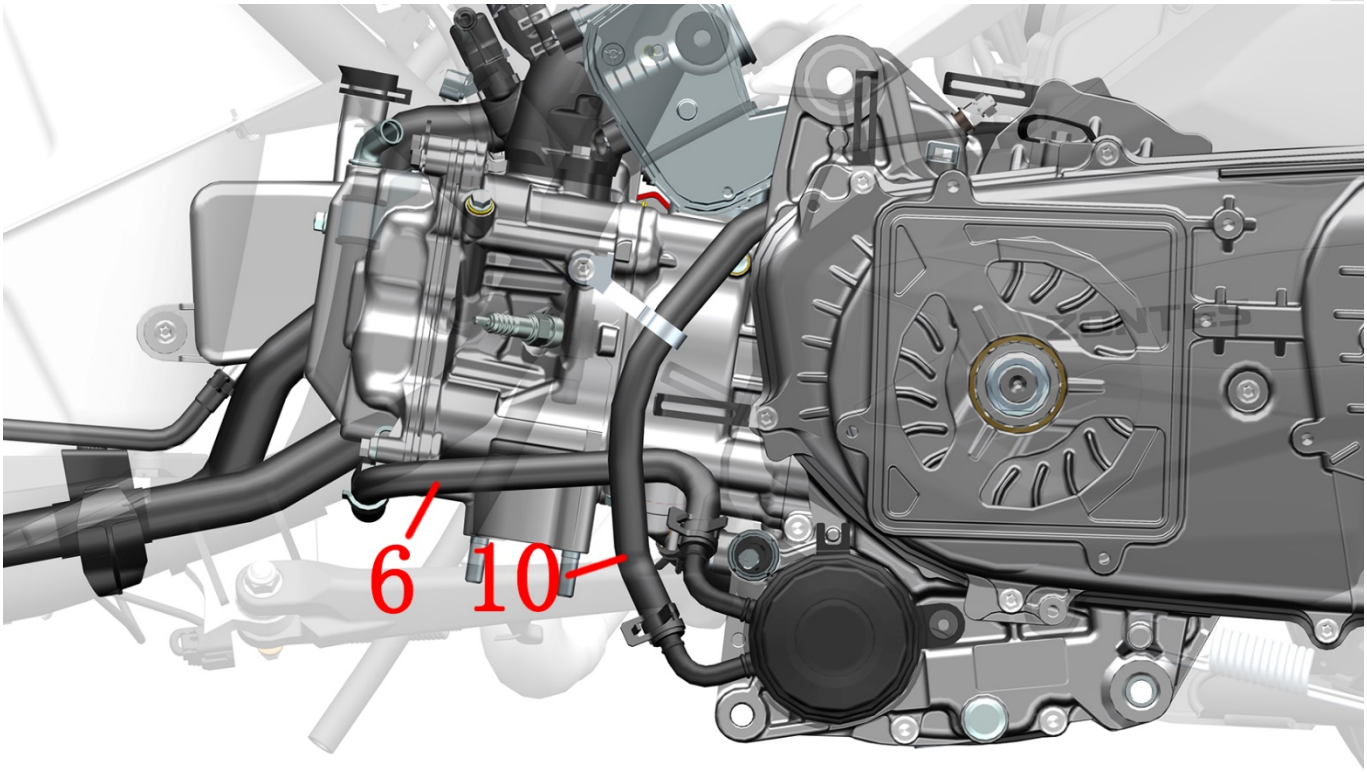

1 - Water tank filler port 2 - Auxiliary water tank connecting water pipe 3 - Water tank 4 - Water tank outlet pipe 5 - Water tank inlet pipe 6 - Oil cooler outlet pipe 7 - Water pump cover outlet pipe 8 - Water pump assembly 9 - Water pump cover inlet pipe 10 - Oil cooler inlet pipe 11 - Thermostat 12 - Auxiliary water tank

Coolant flow diagram
D368/D350/D250

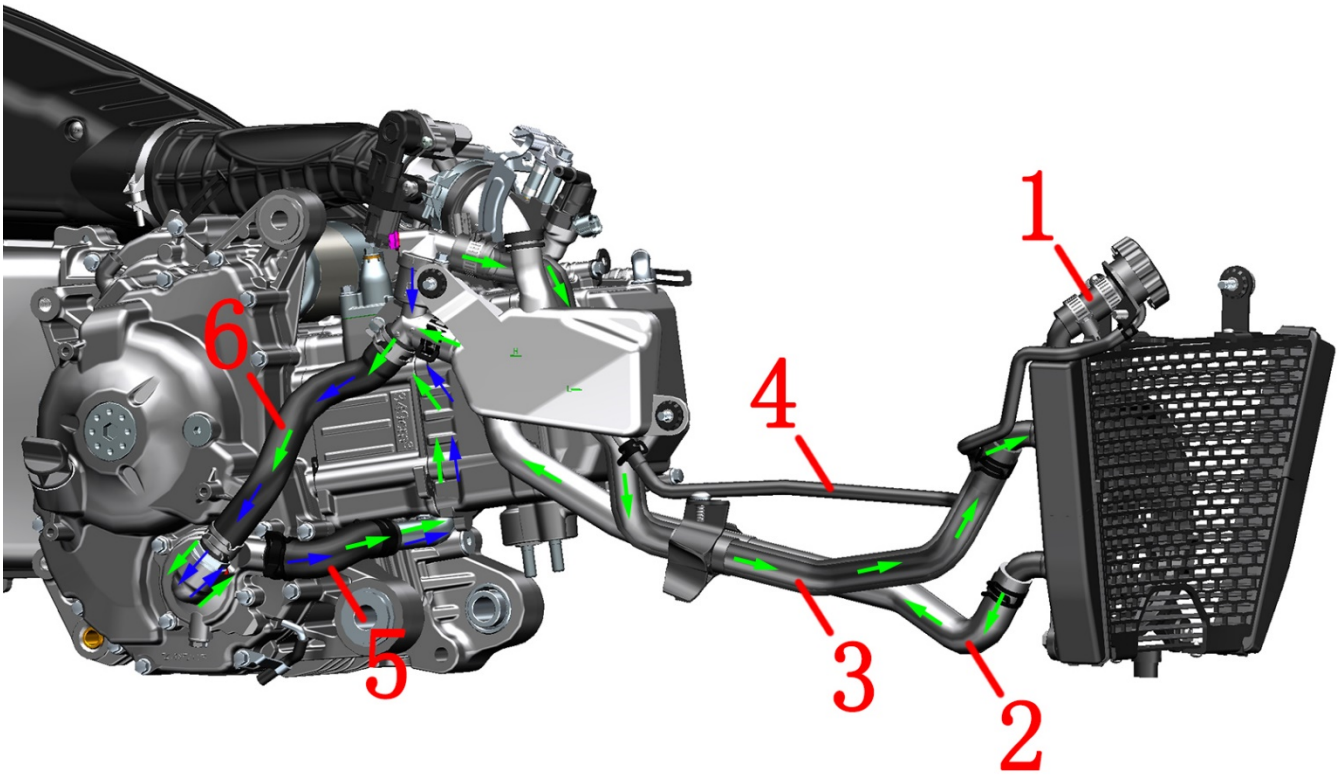

1 - Water inlet pipe 2 - Water outlet pipe of main water tank 3 - Water inlet pipe of main water tank 4 - Connecting pipe of auxiliary water tank 5 - Water inlet pipe of cylinder 6 - Water inlet pipe of water pump cover

Cooling system:
Small loop (indicated by the blue arrow):
Water pump → cylinder inlet pipe → cylinder → thermostat → small circulation outlet pipe → water pump cover inlet pipe

Big loop (indicated by the green arrow):
Water pump →Water pump cover outlet pipe→ Cylinder →Thermostat →Water pump cover inlet pipe

M368(ETC)

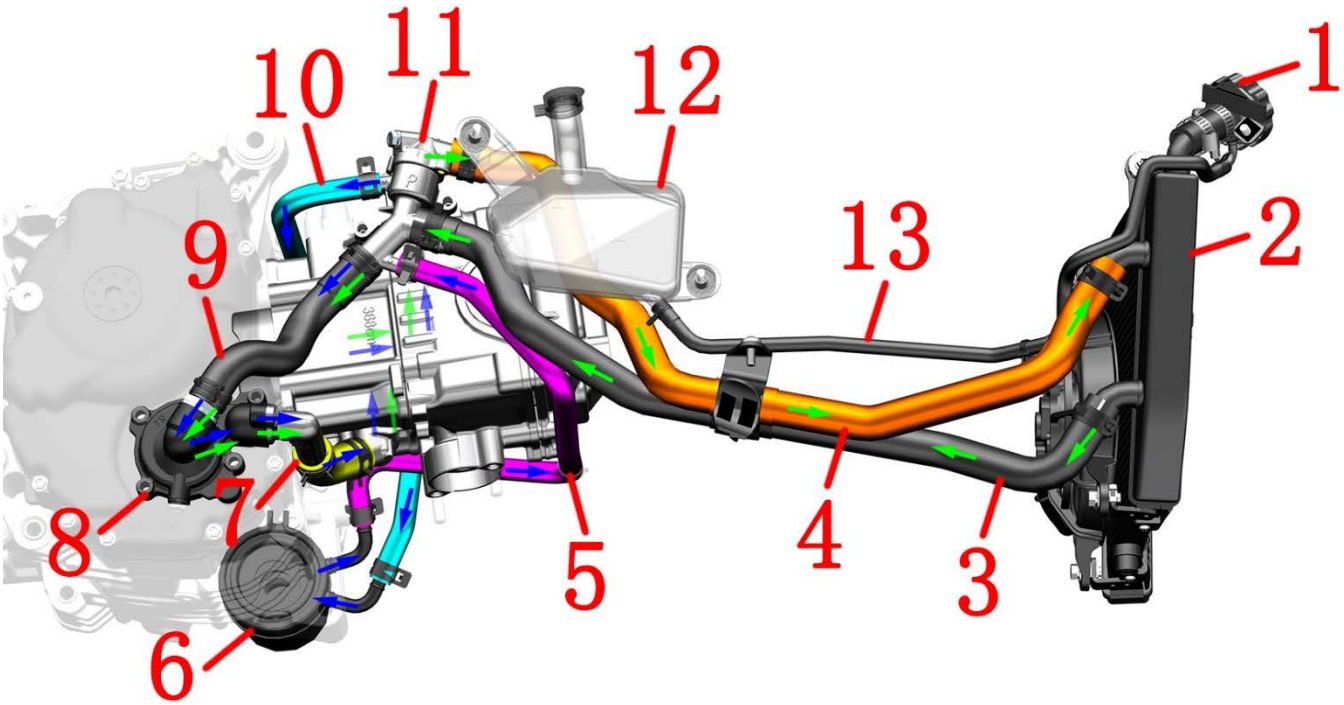

1 - Water tank filler port 2 - Main water tank 3 - Water tank outlet pipe 4 - Water tank inlet pipe 5 - Oil cooler outlet pipe 6 - Oil cooler 7 - Water pump cover outlet pipe 8 - Water pump cover assembly 9 - Water pump cover inlet pipe 10 - Oil cooler inlet pipe 11 - Thermostat 12 - Auxiliary water tank 13 - Auxiliary water tank connecting pipe

M368 (ETC) Cooling System:
Small loop (indicated by the blue arrow):
Water Pump → Water Outlet Pipe of Water Pump Cover → Cylinder → Thermostat → Oil Cooler Inlet Pipe → Oil Cooler → Oil Cooler Outlet Pipe → Water Inlet Pipe of Water Pump Cover
Note: The small cycle is always open, meaning this water circuit still operates when the large cycle starts.

Big loop (indicated by the green arrow):
Water Pump → Water Outlet Pipe of Water Pump Cover → Cylinder → Thermostat → Main Water Tank Inlet Pipe → Main Water Tank → Main Water Tank Outlet Pipe → Water Inlet Pipe of Water Pump Cover

D125/D155

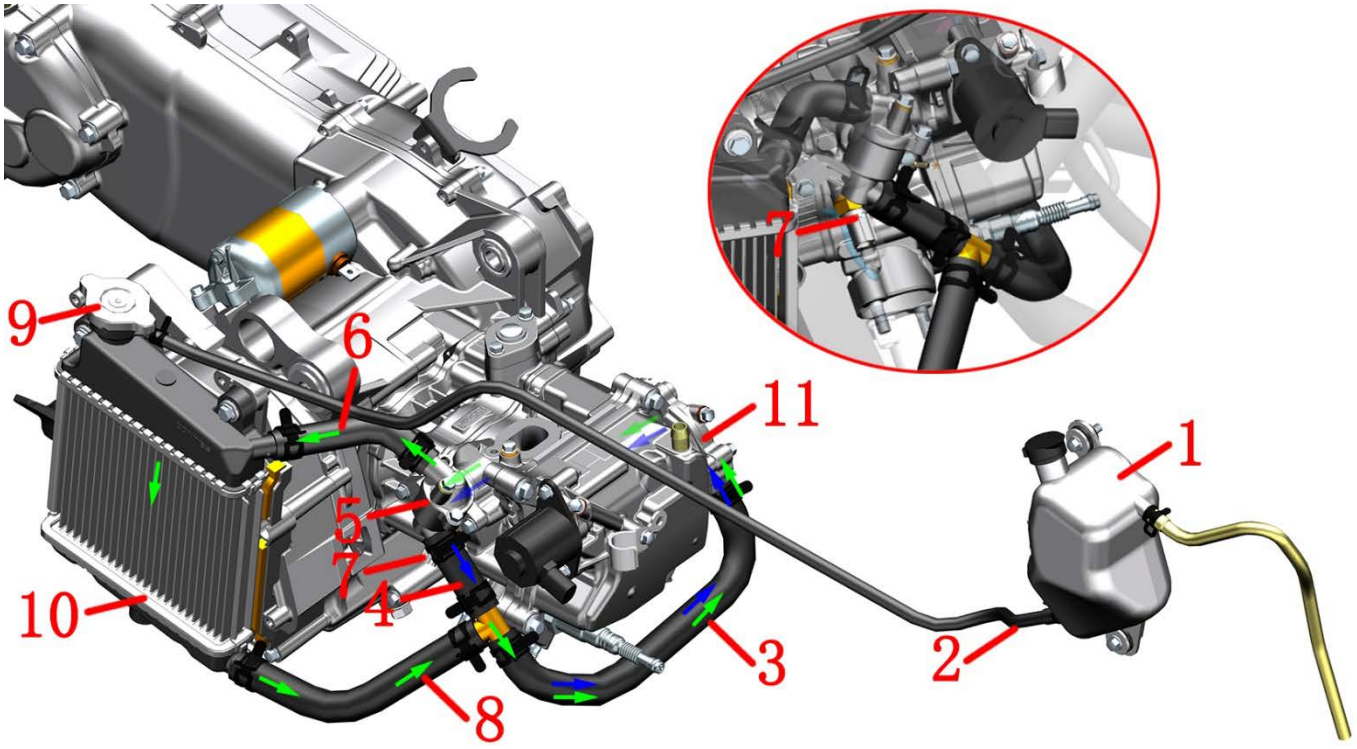

1- Secondary water tank 2-Secondary water tank link pipe 3-Engine inlet pipe 4- Thermostat outlet pipe 5- Thermostat 6- Water tank inlet pipe 7- Water and oil shared sensor 8- Water tank outlet pipe 9- Water tank filling port 10- Radiator assembly 11- Water pump cover assembly

D125 cooling system:

Small loop (indicated by the blue arrow):

Cylinder → thermostat → Thermostat outlet pipe → Engine inlet pipe → water pump cover

Big loop (indicated by the green arrow):

Cylinder → thermostat → Water tank inlet → water tank → Water tank outlet pipe → Engine inlet pipe → water pump cover

Cooling system disassembly

Caution:

●Before disassembling, please refer to the steps of discharging the cooling liquid in the cooling system section of the "Maintenance" chapter to drain all the cooling liquid first.

●Wear protective measures such as waterproof gloves and protective glasses during disassembly, and prevent the coolant from contacting the skin.

●The disassembly operation must be performed after the engine, radiator, and muffler are completely cooled.

D125/D155 Remove the radiator assembly

a. Refer to the steps of "removing spark plugs", remove the right pedal in the same way, remove the fixing bolts of the right pedal, and turn over to the back. Remove 2 M6 with 8 # socket × 22. Remove the right pedal and the surrounding component after the bolt (1). Place an oil pan under it and clamp it with hoop pliers Φ 10.5 Remove the hoop (2) about 40mm (1.6 in) in the direction of the arrow, wear waterproof gloves with both hands, pull out the connecting water pipe (3) of the auxiliary water tank, and use an oil pan to catch the coolant that may remain in the water pipe and the auxiliary water tank.

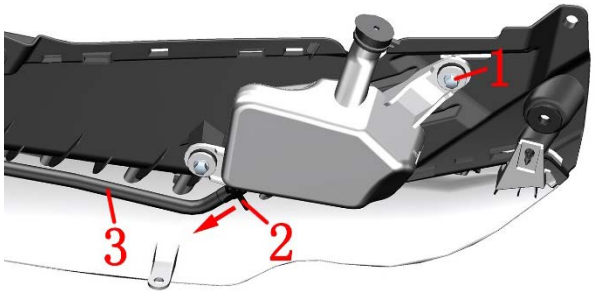

D368/D350/D250 Remove the radiator assembly

a. Refer to the steps of "removing spark plugs", remove the right pedal in the same way, remove the fixing bolts of the right pedal, and turn over to the back. Remove 2 M6 with 8 # socket × 22. Remove the right pedal and the surrounding component after the bolt (1). Place an oil pan under it and clamp it with hoop pliers Φ 10.5 Remove the hoop (2) about 40mm (1.6 in) in the direction of the arrow, wear waterproof gloves with both hands, pull out the connecting water pipe (3) of the auxiliary water tank, and use an oil pan to catch the coolant that may remain in the water pipe and the auxiliary water tank.

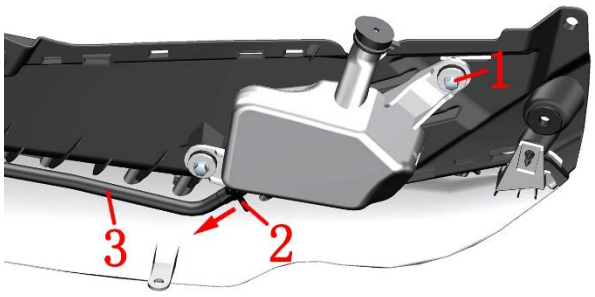

b. Pull the two water pipes out of the water pipe clamp, which is made of plastic, and pay attention to the strength.



c. Remove the bolt (4) on the filler with 4 # socket head.

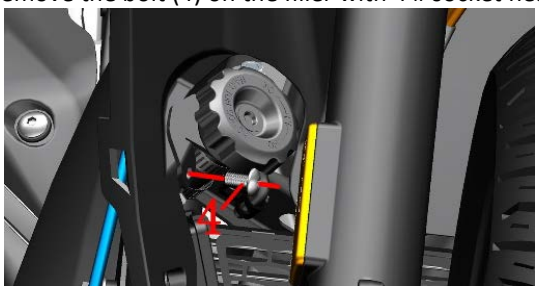

d. Remove the radiator deflector at the bottom and middle of the enclosure according to the steps of "Enclosure Removal"..

e. Place an oil pan under it, clamp the hoop (5) with hoop pliers, move it about 40mm (1.6 in) away from the arrow direction, and loosen the two hoop. After wearing waterproof gloves, first separate the outlet pipe of the main water tank from the main water tank, and then separate the inlet pipe of the water tank from the water tank. Use a drain pan to catch the coolant that may remain in the pipe.

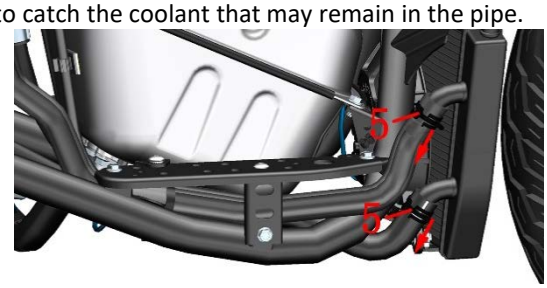

f. After the coolant is discharged, remove the cover first as shown in the figure. Pull out the plug of the cooling fan of the main water tank at the lower left side in the direction of the arrow, press the anti slip snap and then pull out the plug.

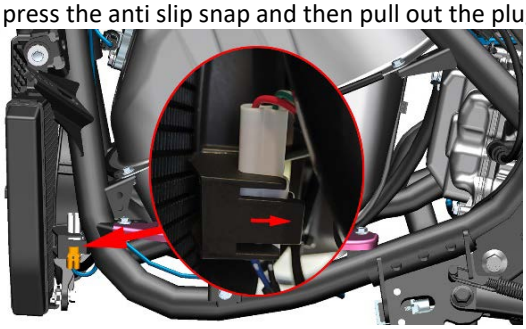

g. Remove 2 M6's on both sides with 8 # socket × Take down the water tank assembly after 22 bolts (1).

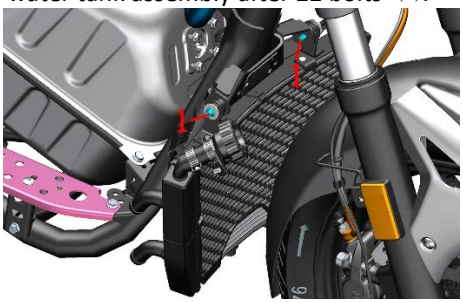

D368/D350/D250 Coolant system hoop/clamp distribution map

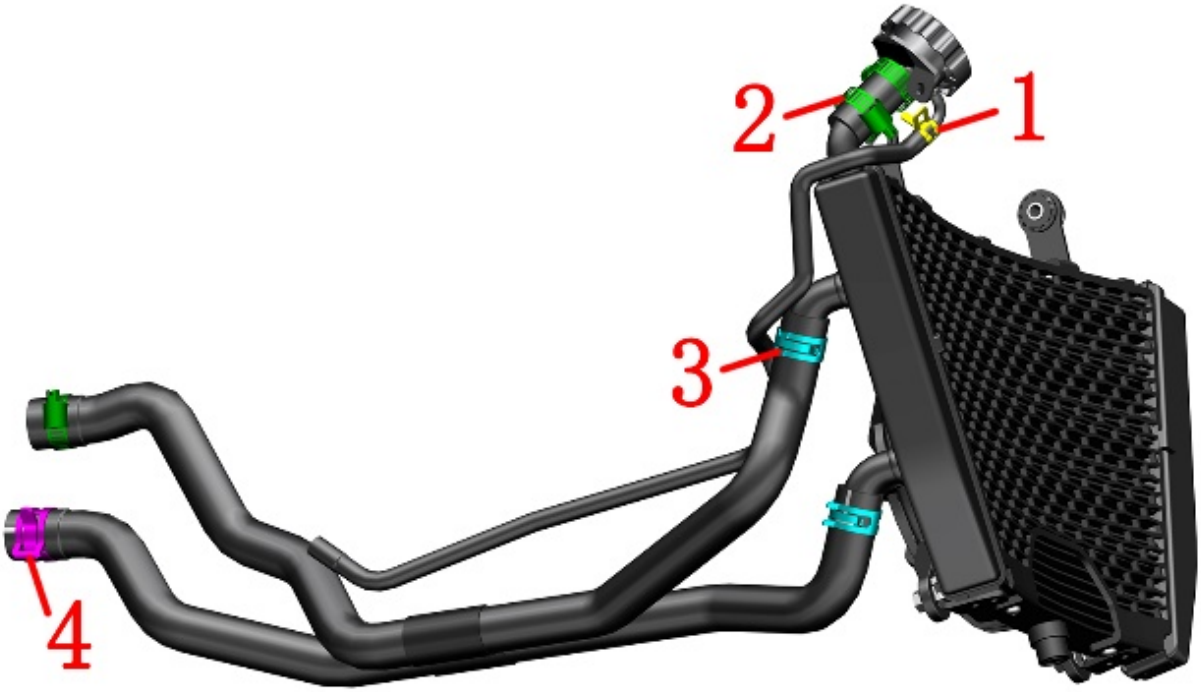

1- Water pipe clamp (ϕ9) 2-Water pipe clamp (ϕ26)*3 3-Water pipe clamp (ϕ24) *2 4-Water pipe clamp (ϕ26)

D368/D350 Thermostat assembly and small loop

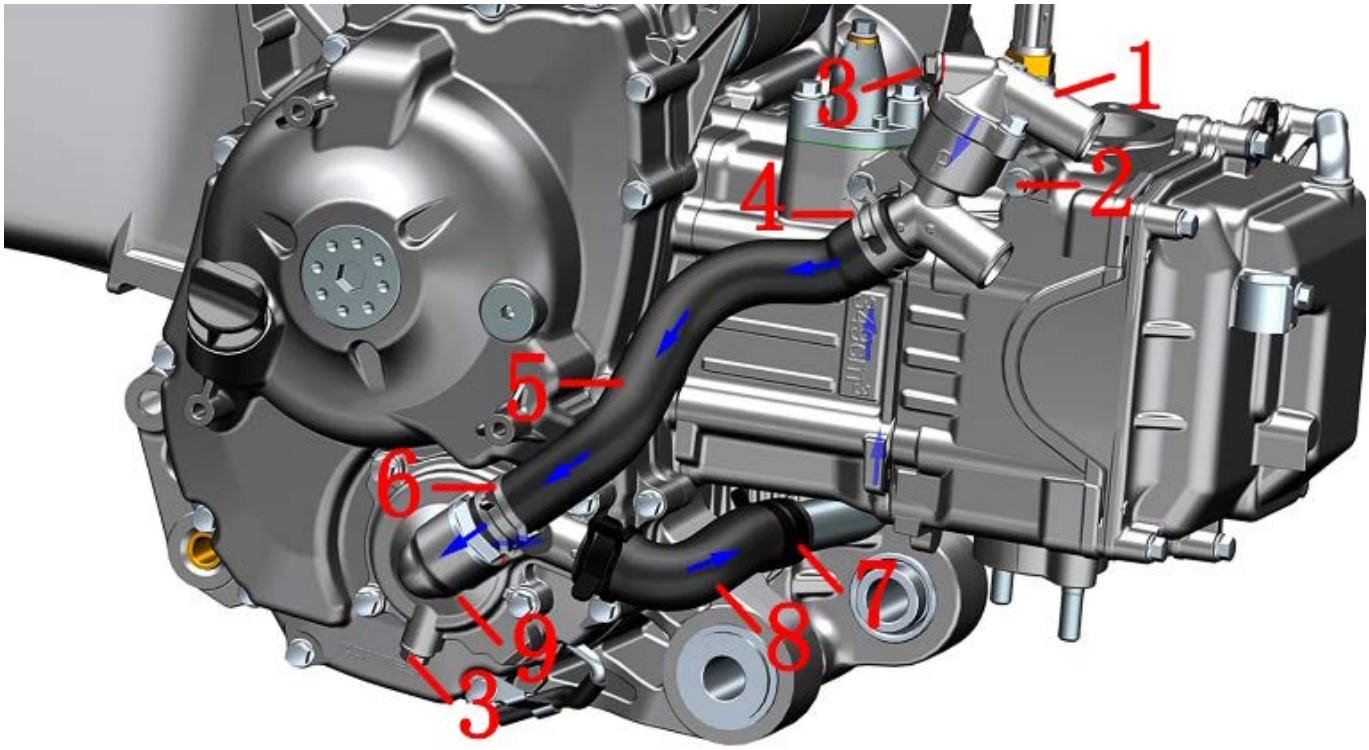

350/368

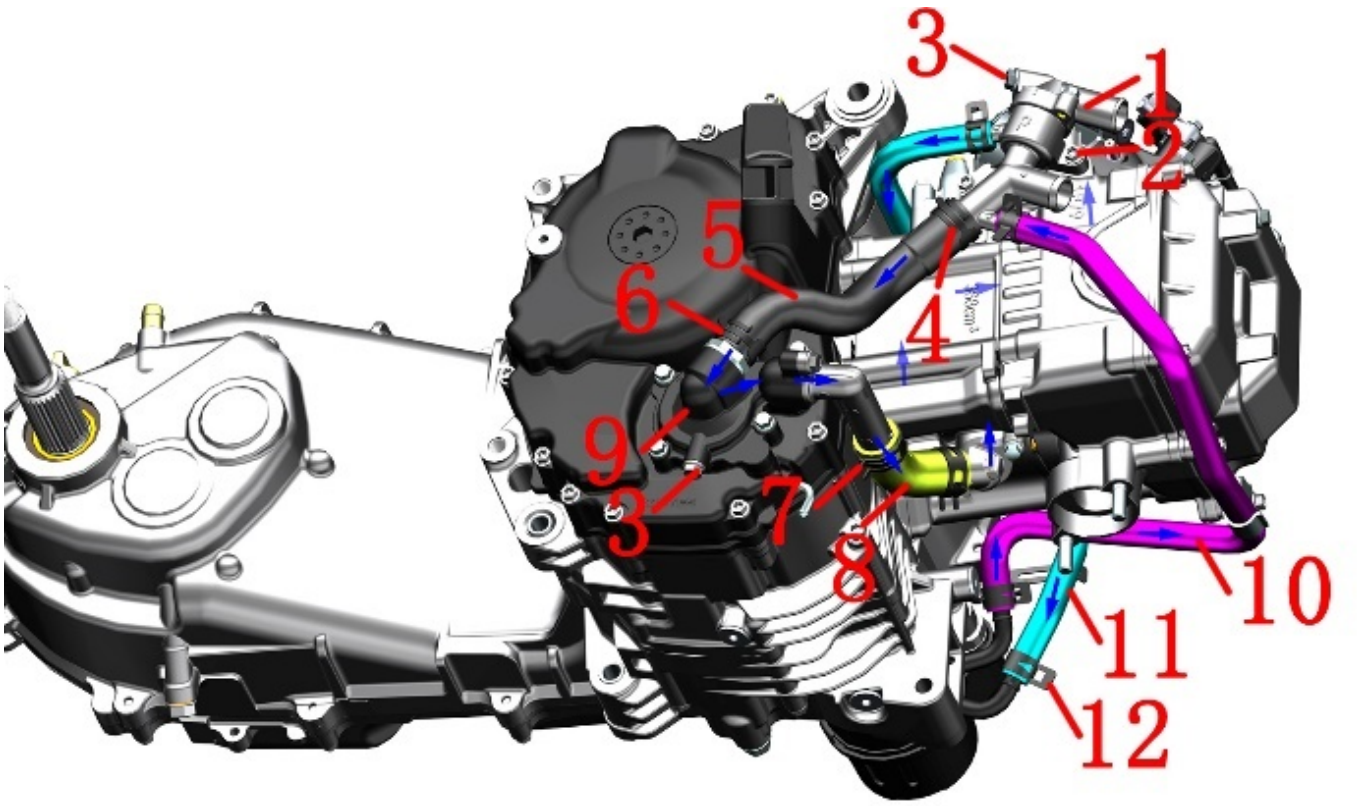

368(ETC)

1-Thermostat assembly 2-M6 × 22 Bolt * 2 3-M6 × 12 bolts * 2 4-water pipe hoop（ Φ 25) 5 - Water pump cover inlet pipe 6 - Water pipe hoop（ Φ 24) 7-Water pipe hoop（ Φ 26) * 2 8-Water pump cover outlet pipe 9-Water pump cover assembly

Caution: The bolt (3) at the thermostat is an exhaust bolt, and the bolt at the water pump cover is a bolt for cooling liquid. There are O-rings of ϕ5.6×ϕ1 at both locations, which need to be replaced once they are disassembled.

a. Use the hoop pliers to remove the hoop(4) hoop(6) and hoop(7), and separate the water pipes(5), (8). Remove the hoop from the water pipe.

b. Use an 8# sleeve to remove 2 bolts(2), take off the thermostat assembly, and remove the O ring(10) from the thermostat assembly. Once disassembled, O ring(10) needs to be replaced.

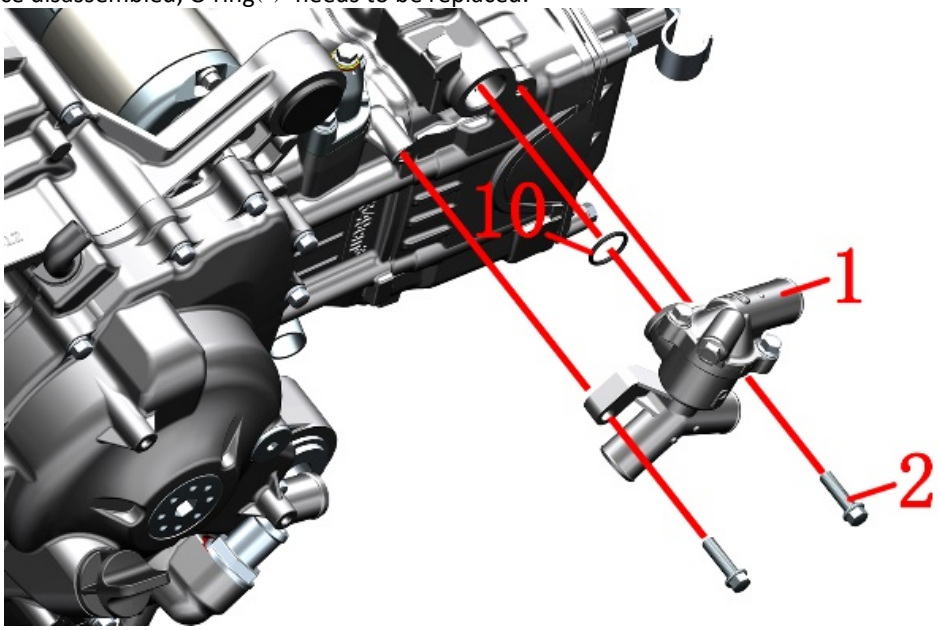

Before reassembly, the joint surface should be cleaned. Note that the O-ring cannot be missing and must be correctly assembled in place. The hoop should be clamped inside the boss to prevent loosening. Bolt(2) Torque: 12±1.5 N.m (1.2±0.2 kgf.m, 9±1 lbf.ft).

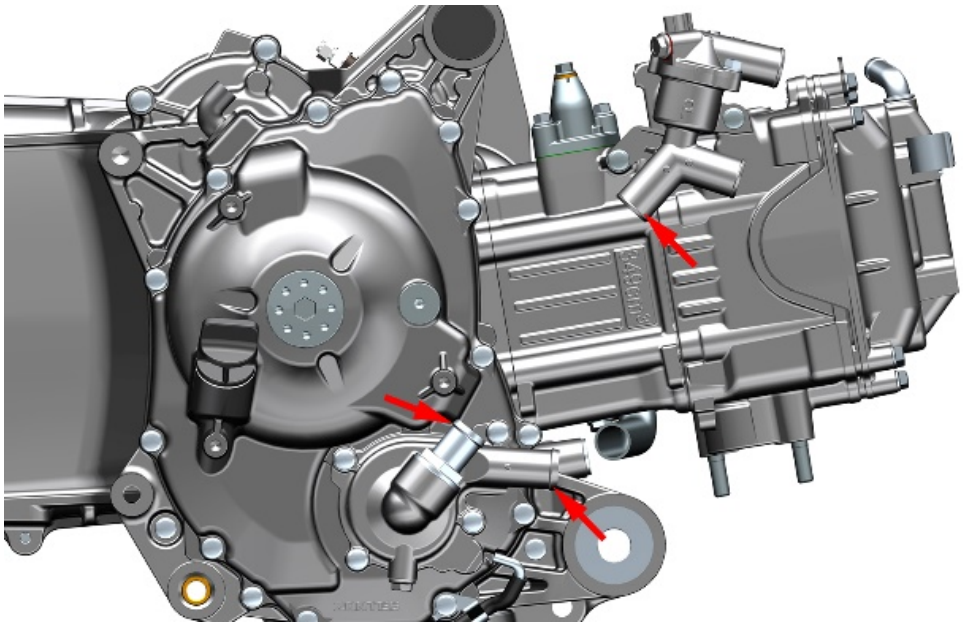

Cooling system accessories

Caution:

●Special ventilation tooling (gas pressure reducing valve, air gun, sealing tube) is required for testing.

●After the soaking inspection is completed, the water stains should be wiped clean in time, or use a dust blower to blow dry. If the main water tank and the small water tank are blown dry by blowing dust loose, the wind pressure should not be too large and should be far away from the radiating fins to avoid damage or deformation of the radiating fins.

●Except the gas pressure is specified when doing the air tightness test, the compressed air of 160kPa (1.63 Kgf/cm2, 23.2 psi) shall be introduced, and the parts shall be immersed in water and left for 10s without bubbles. If there are bubbles, the air leaks and needs to be replaced.

●The heat dissipation fins are allowed to have a small amount of lodging deformation. If the lodging area is too large, it will affect the heat dissipation effect, and it is recommended to replace it. A small amount of deformation can be corrected with a small flat-blade screwdriver.

●It is forbidden to use high-pressure water gun or high-pressure air to directly flush or blow the heat sinks of the main water tank and the small water tank.

●Before further testing, check the appearance for signs of leakage. If there is a slight leakage, try to repair it, otherwise it should be replaced.

1.D368/D350/D250 Main water tank

Check whether the cushion rubber is aging and cracked.

Plug ports A and C with self-made head, and check the sealing by ventilation from port C. Inject the gas with a pressure of 160kPa (1.63Kgf/cm2, 23.2 psi) to ensure that there is no air leakage at the nozzle. Immerse the water tank in the water for 10s and observe whether there are bubbles.

Check whether the fan and the mesh cover are firmly assembled, and the rotating fan blades should be free of stagnation. Check whether the buffer rubber is aged and cracked. Check whether the fan cable is damaged

The fan plug is positive in blue and negative in black. Find the battery with sufficient power, connect the wires according to the positive and negative poles, and check whether the fan draws air backward

Compressed air with lower air pressure can be blown from the back to the water tank from a long distance to clean up foreign objects on the surface. Or use a low-pressure water gun to spray the radiating fins from a long distance to clean up foreign objects on the surface.

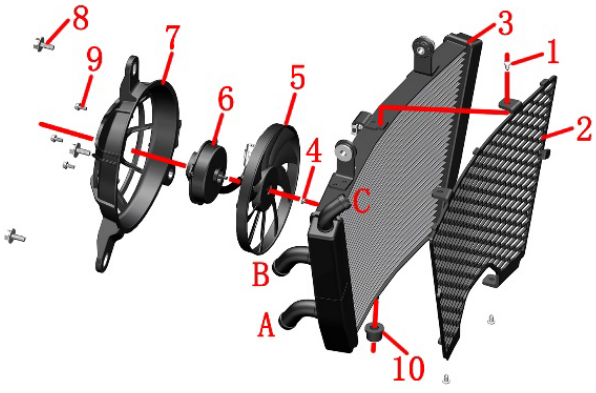

1 - Water tank front cover screw * 3 2 - Water tank front cover 3 - Water tank 4 - Fan sheet nut 5 - Fan sheet 6 - Fan motor 7 - Fan cover 8 - Fan cover bolt * 3 9 - Fan motor bolt * 3 10 - Buffer rubber

2. D368/D350/D250 Attention to the water tank filling port



Caution:

●Special ventilation tooling (gas pressure reducing valve, air gun, sealing tube) is required for testing.

●After the soaking inspection is completed, the water stains should be wiped clean in time.

2.1 Overall tightness inspection

Seal the small pipe and ventilate to the large pipe for air tightness inspection. The gas with a pressure of 160kPa (1.63Kgf/cm2, 23.2 psi) is introduced to ensure that there is no air leakage at the nozzle, and the water inlet is put into the water for 10s to observe whether there are bubbles.

2.2 Pressure relief valve inspection

Introduce 100kPa (1.02Kgf/cm2, 14.5 psi) compressed air into the large pipe, put the water inlet into the water for 10s, and the small pipe should be free of bubbles. When the compressed air is raised to 110kPa (1.12Kgf/cm2, 16 psi), bubbles should appear.

3. Auxiliary water tank



First check whether the rubber cover is aging and cracked, if any, replace it. If the appearance is good, then check the air tightness.

Seal the two small water outlets and open the black plastic cover of the water tank for air tightness inspection.

Continue to seal the small water outlet, fill the auxiliary tank with water and turn the auxiliary tank upside down, and observe whether the rubber cover of the water tank seeps. If there is seepage, it is unqualified. Pour out the water after checking the tightness, remove the plug and let the auxiliary water tank dry naturally or blow it dry with a dust blower.

4. Water and oil shared sensor

For details on sensor detection and disassembly methods, please refer to the section "Electronic Injection System" chapter EFI Parts Fault Diagnosis and Elimination.

5. Thermostat

5.1 Inspection

●The D125/D250/D155steps are similar to the D350, taking the D350 as an example.

Check the appearance for damage and leakage.

Simple test method (test on the whole vehicle):



After the cold car is started, immediately open the water filler cap. If there is no fluctuation in the liquid level, the thermostat is normal, otherwise it is abnormal. Check that when the water temperature is lower than 70°C (158 F), the thermostat should be in a closed state. When the temperature is higher than the initial opening temperature, the expansion valve of the expansion cylinder will gradually open, and the circulating coolant in the radiator will begin to flow.

After the temperature rises, check the inlet pipe of the small water tank. You should be able to clearly feel the signs of water flow or the temperature of the pipe wall, otherwise the pump or waterway will be blocked.

When the temperature reaches 80°C (176 F), the heating rate slows down, and the thermostat works normally. If the water temperature has been rising rapidly, when the internal pressure reaches a certain level, the sudden overflow of boiling water indicates that the valve is stuck.

If it is stuck or closed loosely, it can be removed and cleaned or repaired first, otherwise it should be replaced.

5.2 Failure phenomenon



When the water temperature gauge indicates high, the engine temperature is overheated, but the coolant temperature in the water tank is not high, it is not hot when touching the radiator by hand, and the small water tank fan rotates normally. It indicates that the big circulation is blocked or blocked, which can be preliminarily judged as abnormal thermostat.

There are generally two cases of abnormal thermostat:

a. The main valve is closed for a long time, and the coolant is circulated in a small circulation route regardless of the water temperature, which causes the engine to overheat.

b. The main valve is in the open state for a long time, and the phenomenon is that the water temperature rises slowly when starting, especially in winter, the slow rise of the coolant temperature makes the engine not work at the normal temperature, and the engine temperature is too low.

5.3 Disassembly

Checking method of thermostat assembly:

Seal the two ports, pass in compressed air of 181 kPa (1.85 Kgf/cm2, 26.3 psi) from the other port, put it in the water and let it stand to see if there are bubbles, if there is leakage.

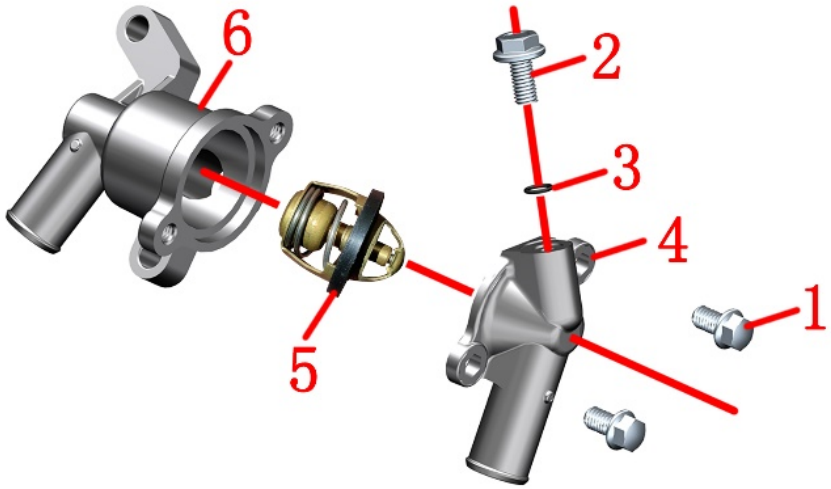

1-M6×10 bolt*2 2-M6×12 bolt 3-ϕ5.6×ϕ1O ring 4-thermostat upper shell 5-thermostat core 6-thermostat lower shell

5.4 Thermostat core inspection

Check the opening temperature, full opening temperature and lift of the main valve in the thermostatic heating equipment with adjustable temperature. If one of them does not meet the specified value, it should be replaced. Or use a thermometer, water, heater, and container to test.

The initial opening temperature of the thermostat is 80～84℃ (176～183 F), and the core moving 0.1mm (0.004 in) can be regarded as the initial opening. The full opening temperature is 95°C (203 F), and the core movement is greater than 3.5mm (0.14 in).

The simple test method is to put the core body into a high temperature resistant container, pour it into boiling water and soak for a period of time, take out the core body with pliers, and observe whether the valve can be fully opened. Until all closed.

The joint surface should be cleaned before rematching, and no O-ring should be installed.



D350/250

6. Water pipe

Check whether there are cracks, bulges and other defects on the surface of each water pipe. Block one end of the water pipe, ventilate the other end and put the water pipe into the nozzle to check if there is any air bubbles, if any, replace it.

7. Check the water pump cover assembly

Check the two points indicated by the arrows for leakage. The bolts are for cooling liquid bolts. If there is leakage, remove the bolts and replace the O-ring. If there is leakage at the leaking pipe of the right crankcase cover, you can try to remove the leaking pipe (because the sealant is applied before press-fitting, it is difficult to pull out), clean it up, reapply the sealant and reinstall it; or directly replace the right crankshaft Box cover assembly.

A small amount of coolant leaking from the leaking pipe is normal. If the engine is running continuously, it is abnormal. The water pump cover needs to be disassembled to check whether the seal has failed.

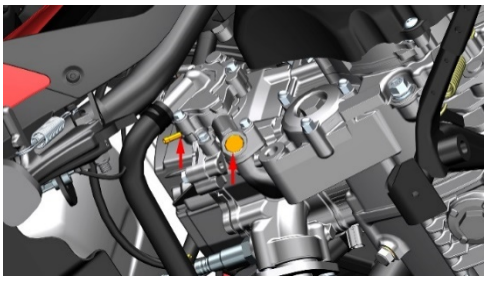

D125/D155

8. Braking system

Know Before Service

1. The content of this chapter requires certain maintenance experience. It is recommended to check or repair with a qualified maintenance organization.
2. Frequent inhalation of the dust generated by the brake pads, regardless of the composition, may have a certain impact on health. Avoid breathing dust particles.
3. Do not use a blow gun or brush to clean the brake assembly, but a vacuum cleaner.
4. Avoid dripping the brake fluid on the paint surface of the cover or the surface of the parts. If it is accidentally splashed, it needs to be rinsed with water immediately.
5. When disassembling the front disc brake main pump and the rear disc brake main pump, make sure that the brake fluid in the oil cup is in a horizontal position. Do not turn it upside down to prevent air from entering, which will affect the braking effect. In severe cases, it may cause the brake to fail and cause personal injury.
6. The steps for replacing brake fluid and exhausting air are the same. For detailed steps, see the section on brake fluid in the "Maintenance" chapter.
7. When the brake pads or brake discs have oil stains, the braking force will be reduced. The contaminated brake pads should be replaced, and the oil stains on the brake discs can be removed with a good-quality degreasing cleaner.
8. After removing the oil cup cover of the main pump, prevent dust and water from entering.
9. If you need to add brake fluid after maintaining the brake system, you must use the newly opened DOT4 brake fluid. Do not mix with other brake fluids.
10. Switch to unplug the ABS hydraulic control unit when the vehicle is powered on. Excessive voltage may damage the hydraulic control unit. The entire vehicle must be powered off before maintenance.
11. The hydraulic control unit is a precision part, and it is forbidden to disassemble it by non-professionals.

DANGER

●If you accidentally swallow the brake fluid, you should contact the poison control center or hospital immediately; if you accidentally get the brake fluid into your eyes, rinse with water and seek medical attention immediately.
●Brake fluid must be kept away from children and pets.
●The vehicle must be parked on a flat and stable ground or a lifting platform.

WARNING

●Wear protective gloves/protective clothing/protective goggles/protective masks to maintain the brake system.
●It is strictly forbidden to directly flush the main pump with high-pressure water.

Trouble shooting

Soft feeling from brake lever

a. The brake system oil circuit enters the air
b. Brake fluid leakage
c. The brake pads or brake discs have oil stains
d. Wear of brake caliper or disc drive main pump piston seal ring
e. Brake pads or brake discs are worn
f. The disc brake caliper is oily
g. The main pump of the disc brake is oily
h. The disc brake caliper does not slide flexibly
i. Insufficient brake fluid
j. The brake oil circuit is not unblocked
k. Brake disc is twisted and deformed
l. Wear and stickiness of disc brake caliper piston
m. The piston of the disc brake main pump is worn and sticky

Hard feeling from brake lever

a. The brake oil circuit is blocked
b. The piston of the disc brake caliper is worn and sticky
c. The piston of the disc brake main pump is worn and sticky
d. The disc brake calipers cannot slide normally
e. Wear of brake caliper or disc drive main pump piston seal

Disassemble the disc brake main pump and calipers

Caution:

●The protective measures and brake fluid hazards have been explained before, so I won't repeat them here.
●The two copper pads at the brake hoses of the disassembled calipers and the main pump must be replaced to avoid leakage. The surface of the disc brake oil pipe bolt and the copper pad can be reused if there is no scratch.
●Disassembling the main pump and calipers requires high hands-on ability, and it is recommended to be carried out by professional personnel or maintenance organizations. The replaced brake fluid should be recycled by a professional unit and properly disposed of.
●The operator is responsible for the consequences caused by manual disassembly or improper assembly, and is not within the scope of the three guarantees.
●Operate in a dry, dust-less or dust-free environment.

Disassemble the front disc brake main pump

a. Remove the cover according to the steps in the removal direction in the "Front Fork Assembly" of this manual.

b. Use a 12# sleeve to loosen the disc brake oil pipe bolt(1), pay attention to loosen it and then tighten it slightly without leakage, otherwise it will be more difficult to loosen this bolt later. Grasp the mirror rod of the right rear view mirror, use a 13# sleeve to remove the nut④, remove the small washer③, spring②, and large washer①, and take off the rear view mirror. When reassembling, make sure that the small washer③ is aligned with the side plane of the mirror rod bolt.

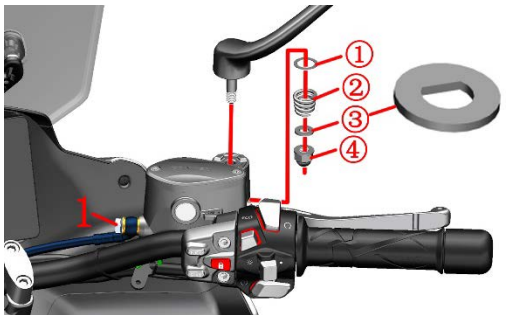

c. After grasping the front brake main pump, remove the 2 bolts (2) with a 5# inner hexagon, and remove the right auxiliary switch.

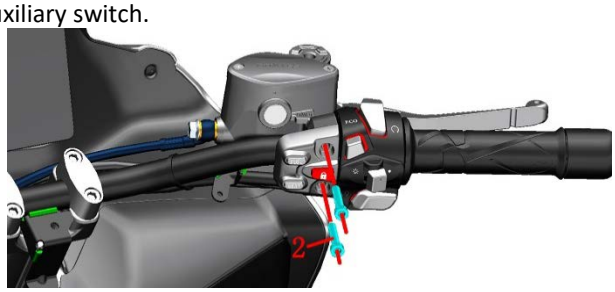

d. Tilt the front brake main pump so that the bolt(1) faces upward, wear waterproof gloves and use a 12# sleeve to remove the bolt(1), remove the copper pad(3), remove the FMC-HU oil pipe, and remove the brake fluid in the main pump. Pour out. Bolt(1) Standard torque: 32N.m (3.3kgf.m, 24 lbf.ft).



e. Refer to the steps of adding brake fluid to remove the upper cover; refer to the steps of removing the brake switch and brake handle to remove.

f. Disassemble the front disc brake main pump

"a". is the oil window assembly that cannot be disassembled unless necessary; "b" is the ϕ0.5 oil hole; "c" is the ϕ3 pressure relief oil hole.

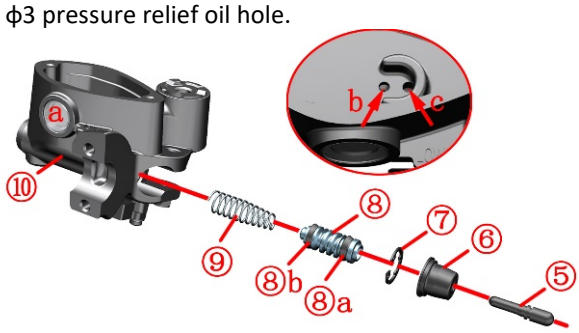

⑤ Piston push rod ⑥ dust cap ⑦ retainer ring ⑧ piston assembly (⑧ a outer seal ring ⑧ b inner seal ring) ⑨ spring ⑩ main pump housing

Diesel or kerosene can be used to clean the brake fluid to facilitate the next step of decomposition. If the oil hole is blocked, use a dust blower or a small needle tool to clear it. After decomposition, use a soft lint-free brush to clean up all parts. It is not recommended to use a dust blower for drying. The air compressor with poor drying or filtering effect may blow dust, moisture or other debris into the main pump housing that has been cleaned through the blower; high

vacuum can be used Vacuum cleaner. Before assembling the piston assembly and spring, apply a small amount of DOT4 brake fluid, and do not apply other lubricating materials such as lubricating oil, grease or anti-rust oil.

g. Apply an appropriate amount of high-vacuum silicone grease to the outer end of the handle bolt and piston assembly according to the previous requirements for lubricating the movable part of the handle. Refer to the disassembly steps to reinstall, and follow the previous steps to add the newly opened brake fluid and perform the exhaust operation. Note that the copper pad (3) needs to be replaced with a new one to prevent leakage. After the assembly is completed, it is necessary to confirm that the brake has been restored before driving the vehicle.

Disassemble the rear disc brake main pump

The rear disc brake main pump and the front disc brake main pump are mirrored and symmetrical. Please refer to the steps for disassembling the front disc brake main pump for disassembly.

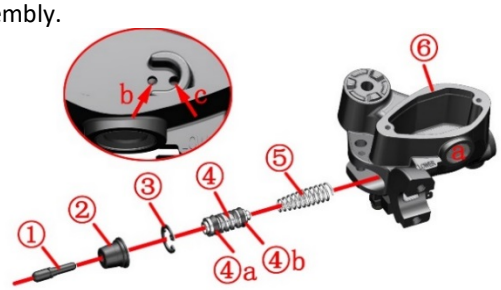

Disassemble the front disc brake caliper D350/D250/D368

a. Use 14 # to loosen the oil pipe bolt without leakage. Remove 2 M10 pieces with 8 # hexagonal socket × one point five × 60 bolts (red circle). The standard torque of the bolts is 45~50N. m (4.6~5.1 kgf. m, 33~37 lbf. ft). Do not operate the brake handle after removing the caliper.



b. Place the oil drain pan under the front disc brake caliper. First remove the screw rubber cap (1), wear waterproof gloves, and then remove the bolt (2) with 8 # box wrench, remove the bolt (3) with 14 # box wrench, and remove two copper washers (4).

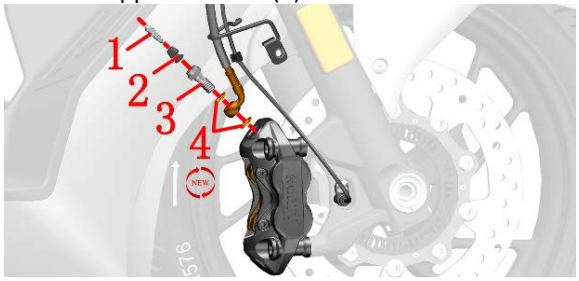

c. Remove the brake pads according to the steps of removing the brake pads

d. Front disc brake caliper disassembly



1- Bolt 2- Circlip 3- Inner side caliper housing 4-ϕ30 oil seal 5-ϕ30 dust seal 6-ϕ30 piston 7- Disc brake pad 8- brake spring 9- Out side caliper housing 10-Pin 11-ϕ34 oil seal 12-ϕ34 dust seal 13-ϕ34 piston

D125/D155

a. Use 5# inner hexagon to remove bolt(1), and remove the wire clamp. First use a 12# sleeve to loosen the disc brake oil pipe bolt(4), pay attention to loosen it and then tighten it slightly to avoid leakage, otherwise it will be more difficult to loosen this bolt later. Use 4# inner hexagon to remove bolts (2) and to remove the wheel speed sensor. Use a 14# sleeve to remove the bolt (3). Standard torque of bolt(3): 24N.m (2.4kgf.m, 18 lbf.ft); Standard torque of bolt(4): 32N.m (3.3kgf.m, 24 lbf.ft).

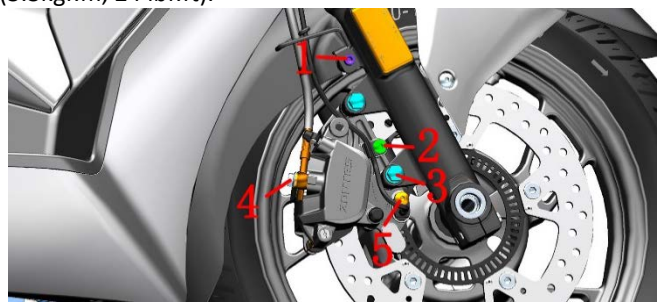

b. After wearing waterproof gloves, loosen the bolt(4) with a 12# sleeve, and turn the caliper upside down so that the head of the bolt(4) is facing down to drain the brake fluid into the oil pan. Remove the bolt(4) and the copper pad and then remove the FC-HU oil pipe. Refer to the brake fluid steps to remove the upper cover of the front disc brake main pump to speed up the discharge of brake fluid.

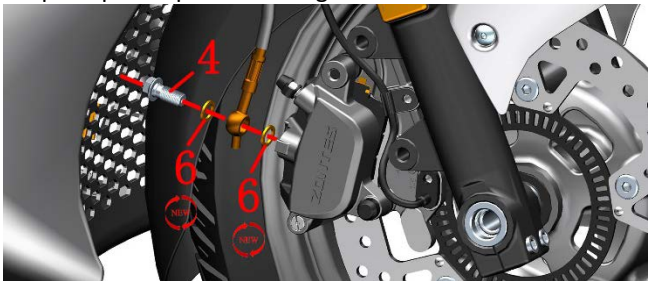

c. Remove the brake pads according to the steps of removing the brake pads

d. Front disc brake caliper disassembly

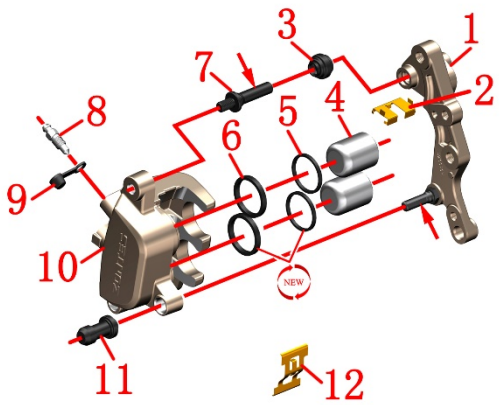

1- Caliper mounting plate 2- Brake pad holder 3- Caliper pin rubber cap 4- Piston 5-dust seal 6-oil seal 7-caliper pin 8-bleed nozzle 9-bleed nozzle rubber cap 10-caliper housing 11-caliper mounting plate pin rubber cap 12-brake spring

A dust blow gun can be used to blow in compressed air from the oil pipe bolts to blow out the piston. Pay attention to placing towels or other soft materials on the piston to prevent damage caused by collision between the piston and the caliper mounting plate; and the dust blow gun should be kept away from the caliper body. If the distance is too close, the piston may suddenly fly out and cause damage. Check the piston and caliper cylinder for scratches, damage, pits, etc. Check whether the pin is deformed.

Caution:

●Apply silicone grease to the surfaces of the two pins indicated by the arrows.

●The oil seal and dust seal should be replaced with new ones after disassembly. DOT4 brake fluid should be applied to the oil seal and piston, and silicon grease should be applied to the outer ring of the dust seal.

●Apply thread fastening glue to the thread of the caliper pin, torque: 22N.m (2.2kgf.m, 16 lbf.ft).

●The torque of the air release nozzle: 7～9N.m (0.7～0.9kgf.m, 5～7 lbf.ft).

●The open end of the piston should face the caliper mounting plate, and do not install it backwards.

●If there is slight rust on the surface of the piston, it can be polished off with 2000 mesh fine sandpaper.

e. Refer to the disassembly procedure to restore all parts and add new DOT4 brake fluid according to the procedure of replacing the front disc brake brake fluid. Only after confirming that the brake is restored can the vehicle be driven.

Disassemble the rear disc brake caliper

a. Place an oil pan at the bottom of the caliper, wear waterproof gloves and loosen the bolt(1) with a 12# sleeve, remove the copper pad(2), and remove the RC-HU oil pipe. Refer to the steps for adding brake fluid to the main pump of the rear disc brake. Remove the upper cover of the main pump to accelerate the discharge of the brake fluid. Bolt(1) Standard torque: 32N.m (3.3kgf.m, 24 lbf.ft).

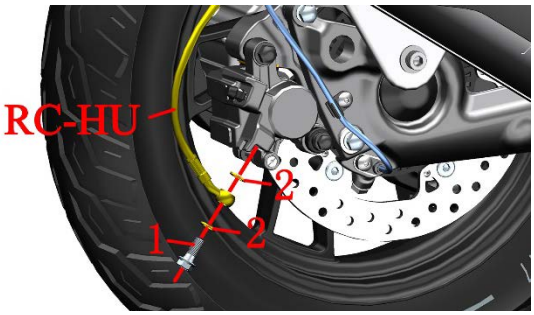

b. Use a 14# sleeve to remove the bolt (3). Standard torque of bolt (3): 24N.m (2. 4kgf.m, 18 lbf.ft).

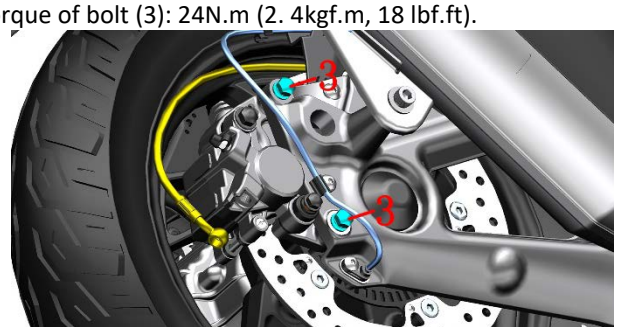

c. Refer to the procedure for replacing the brake pads to remove the brake pads first.

d. Disassemble the rear disc brake caliper

Refer to the previous steps to disassemble the front disc brake caliper piston to remove the rear disc brake caliper piston. Check the piston and caliper cylinder for scratches, damage, pits, etc. Check whether the pin is deformed. The points that should be paid attention to during cleaning and assembly are detailed in the previous description, and will not be repeated here.

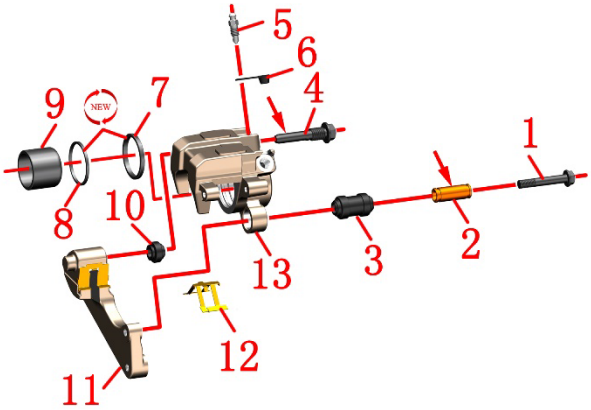

1- caliper mounting plate pin 2- bushing 3- rubber cap 4- caliper pin 5- vent nozzle 6-vent nozzle rubber cap 7-oil seal 8-dust seal 9-piston 10-caliper pin rubber cap 11- Caliper mounting plate 12- Brake pad spring 13- Caliper housing

Caution:

●Apply silicone grease to the surface of the pin and bush indicated by the arrow.

●The oil seal and dust seal should be replaced with new ones after disassembly. DOT4 brake fluid should be applied to the oil seal and piston, and silicon grease should be applied to the outer ring of the dust seal.

●Apply thread fastening glue to the thread of the caliper pin, torque: 27N.m (2.8kgf.m, 20 lbf.ft).

●The torque of the air release nozzle: 7～9N.m (0.7～0.9kgf.m, 5～7 lbf.ft).

●The open end of the piston should face the caliper mounting plate, and do not install it backwards.

●If there is slight rust on the surface of the piston, it can be polished off with 2000 mesh fine sandpaper.

Brake hose and wheel speed sensor

Check the gap between the wheel speed sensor and the induction ring gear

Caution:

●The D125/D155/D250 steps are similar to the D350, taking the D350 as an example.

●The vehicle needs to be parked on a stable lifting platform or on a level and level ground.

Put down the main bracket to park the vehicle firmly and let the rear wheels hang in the air.

Use a feeler gauge to check whether the gap between the wheel speed sensor and the ABS induction ring gear is 0.4-1.2mm (0.02-0.05in).

If the gap is not within the specified range, check whether the wheel speed sensor is damaged and whether the ABS induction ring gear is loose. The front wheel needs to check whether the position of the sensor installed on the front disc brake caliper mounting plate is deformed, and the rear wheel is to check whether the mounting position on the rear rocker arm is deformed and whether the rear wheel nut is loose.

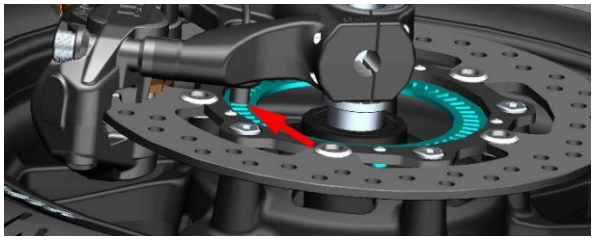

Front wheel

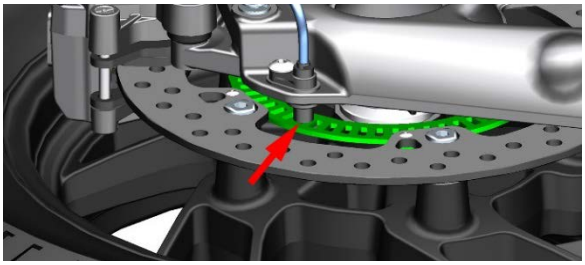

Rear wheel

Remove the brake hose and wheel speed sensor

Caution:

●Check whether the brake hose is normal according to the maintenance table.

●Before disassembling the brake hose, drain the brake fluid before operation.

●Before removing the hose, remove the upper cover of the front and rear disc brake main pump, loosen the disc brake oil pipe bolts from the front and rear disc brake calipers to drain the brake fluid.

●The discharged brake fluid needs to be properly disposed of, and it is forbidden to continue to use it. It is forbidden to dump at will to pollute the environment; or put it at will, etc. It should be handed over to a qualified recycling unit for proper disposal.

●The D125/D250/D155 steps are similar to the D350, taking the D350 as an example.

Release brake fluid

a. Refer to the previous steps to remove the oil pan first, place the oil pan at the front and rear calipers, remove the disc brake oil pipe bolts and copper pads first, and drain the brake fluid into the oil pan, and then refer to the front and rear disc brake main pumps. Add brake fluid step to remove the upper cover of the main pump to accelerate the discharge of brake fluid. Remove the disc brake oil pipe bolts and copper pads at the main pumps of the front and rear disc brakes. Only the disassembly steps of the brake hose are explained here.

b. Press the buckle indicated by the arrow, turn the plug push rod in the direction indicated by the arrow, and pull out the plug. In order to prevent the remaining brake fluid from entering the plug when the hose is removed in the next step, the plug of the hydraulic control unit can be wrapped with an oil-resistant film plastic bag.

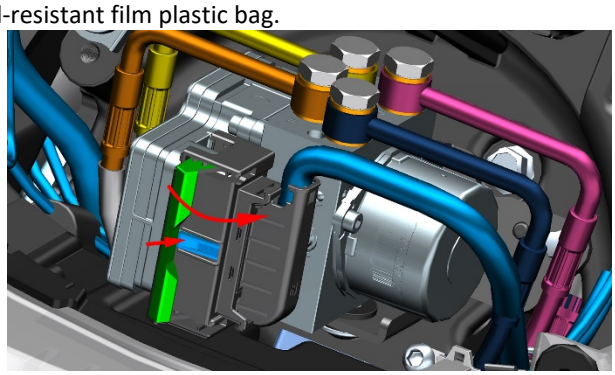

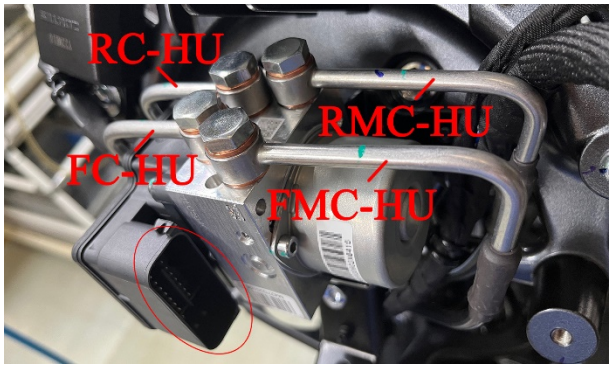

D350/D250/D155

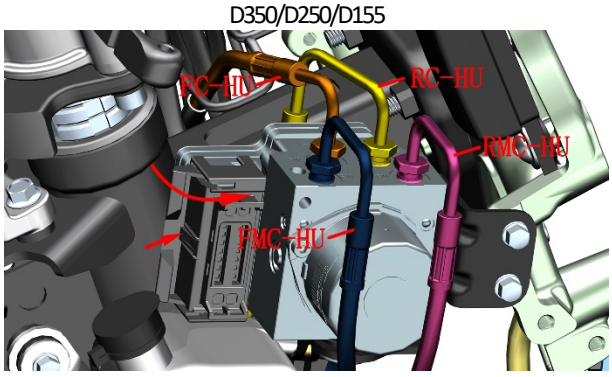

D125

FMC-HU: Front disc brake main pump-hydraulic control unit
FC-HU: Front disc brake caliper-hydraulic control unit
RMC-HU: Rear disc brake main pump-hydraulic control unit
RC-HU: Rear disc brake caliper-hydraulic control unit

Use oil-resistant plastic bag or plastic film to put it around the bottom of the hydraulic control unit, and fix it with tape to prevent the residual brake fluid from dripping on the parts when the oil pipe nut joint is loosened. D350 use a 14# open-end wrench to loosen the oil pipe nut joints at the hydraulic

control unit counterclockwise. D350/D250/D155 the bolt torque: 21N.m (2.1 kgf.m, 15 lbf.ft).D125 use a 12# open-end wrench to loosen the oil pipe nut joints at the hydraulic control unit counterclockwise, D125 the nut torque: 18N.m (1.8 kgf.m, 13 lbf. ft). Wipe up the remaining brake fluid with a clean non-woven fabric. Take care to take protective measures and prevent dripping onto the cover or cable connector.

FMC-HU and RMC-HU

Use an 8# sleeve to remove the bolt(1) that fixes the seat of the oil pipe, pull down the upper part of the FMC-HU hose, pull it out from the lower part of the direction cover, and then pull it out from the hose bracket. Check whether the surface of the removed hose is aging, cracked, damaged, abraded, etc. Wipe up the remaining brake fluid with a non-woven cloth, and then wrap the ends of the hose with cling film or a plastic bag to prevent foreign matter from entering.

Remove and inspect the RMC-HU hose in the same way.

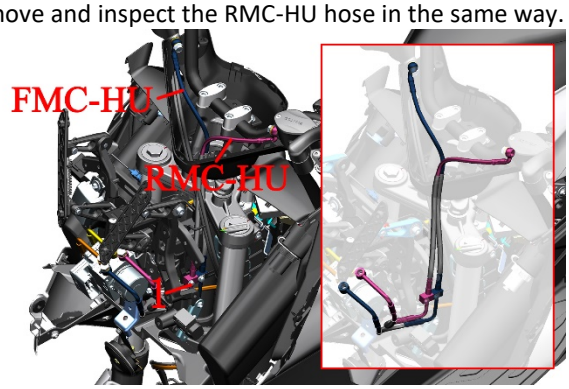

FC-HU and wheel speed sensor (front wheel)

a. Locate the plug of the wheel speed sensor on the left side of the frame, and pull out the plug after pressing the anti-release card

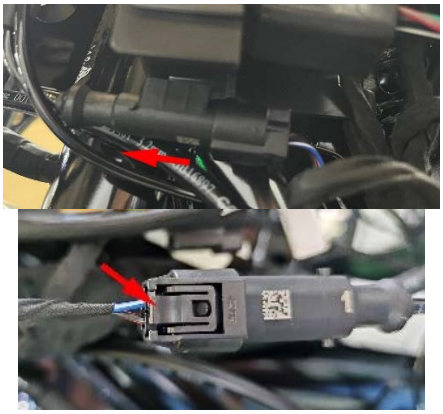

b. For the removal method of FC-HU and wheel speed sensor caliper, please refer to the section “Removing the front disc brake caliper”.

c. Remove the 3 wire ties(5), and remove the wheel speed sensor wire(3). Check whether the cable is damaged. If the cable sheath is frayed, wrap it with electrical tape to avoid short-circuit and cause vehicle failure. The front wheel speed sensor is also responsible for providing a speed signal to the meter to display the speed per hour.

Use an 8# sleeve to remove the bolt(4), and take off the FC-HU hose.

If you need to remove the hose bracket(2), you can use 4# inner hexagon to remove the bolt(1) and then take it off. If you only remove the hose, you can skip this step.

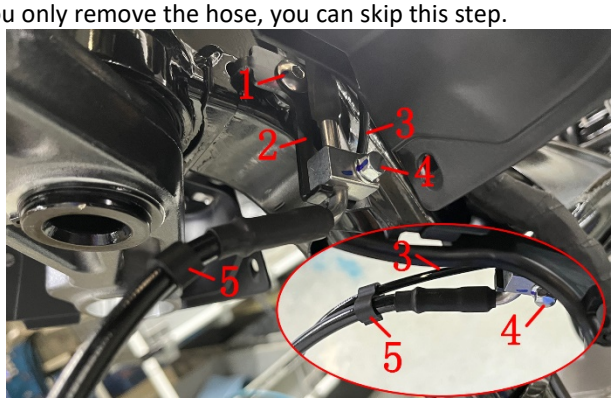

d. Check whether the surface of the removed hose is aging, cracked, damaged, abraded, etc. Wipe up the remaining brake fluid with a non-woven cloth, and then wrap the ends of the hose with cling film or a plastic bag to prevent foreign matter from entering. Check whether the cable sheath of the wheel speed sensor cable is damaged. If the sheath is frayed, it can be glued with electrical tape to prevent short-circuit.

RC-HU and wheel speed sensor (rear wheel)

a. Locate and remove the wheel speed sensor(1) connector on the inside right of the middle of the frame.

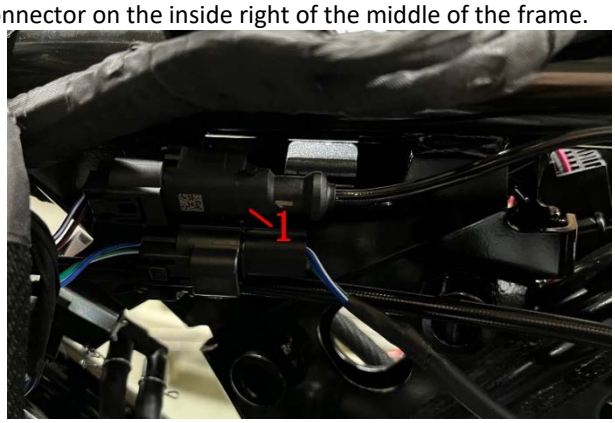

b. First remove the 3 pieces of wire clamp(3), and then pull out the wheel speed sensor(1) and the RC-HU hose from the 3 pieces of oil pipe clamp(2). If you need to remove the tubing clamp (2), you can use 4# inner hexagon to remove the bolts and then you can take it off.

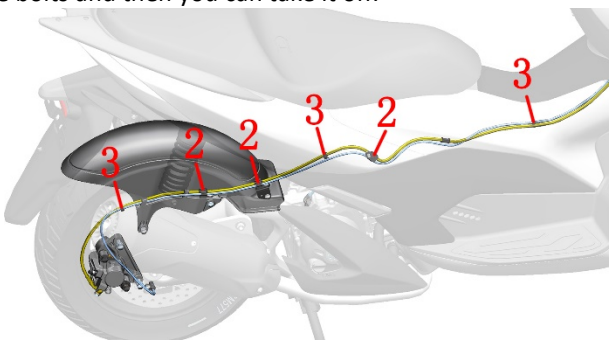

c. Pull the RC-HU head out of the gap between the pke and the frame.

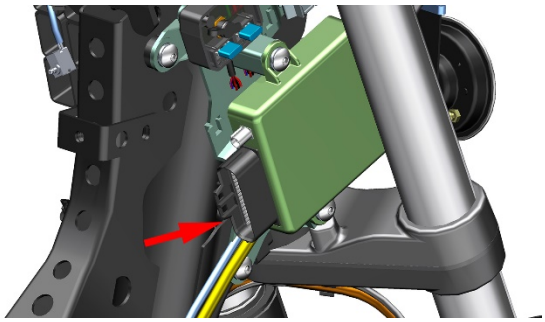

d. Pull out the RC-HU hose and wheel speed sensor wire from the rear inner mud plate.

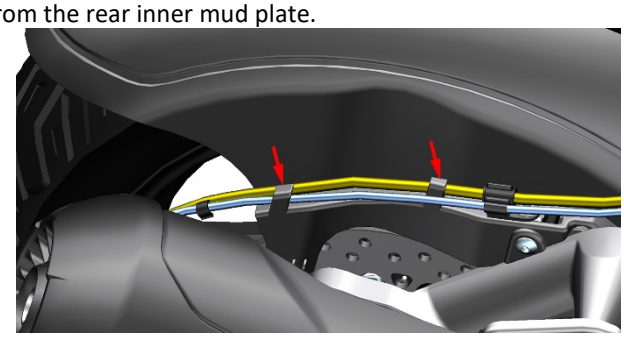

e. Pull out the wheel speed sensor from the clamp(4), remove the bolt(5) with a 4# inner hexagon, and then remove the wheel speed sensor from the car. If you need to remove the clamp(4), you can use 4# inner hexagon to remove the bolt(5) that fixes the clamp.

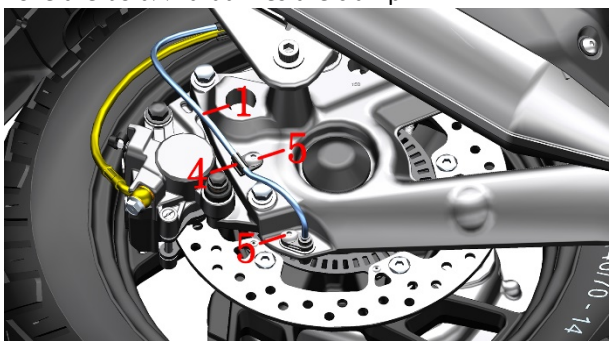

f. Check whether the surface of the removed hose is aging, cracked, damaged, abraded, etc. Wipe up the remaining brake fluid with a non-woven cloth, and then wrap the ends of the hose with cling film or a plastic bag to prevent foreign matter from entering. Check whether the cable sheath of the wheel speed sensor cable is damaged. If the sheath is frayed, it can be glued with electrical tape to prevent short-circuit.

ABS system layout

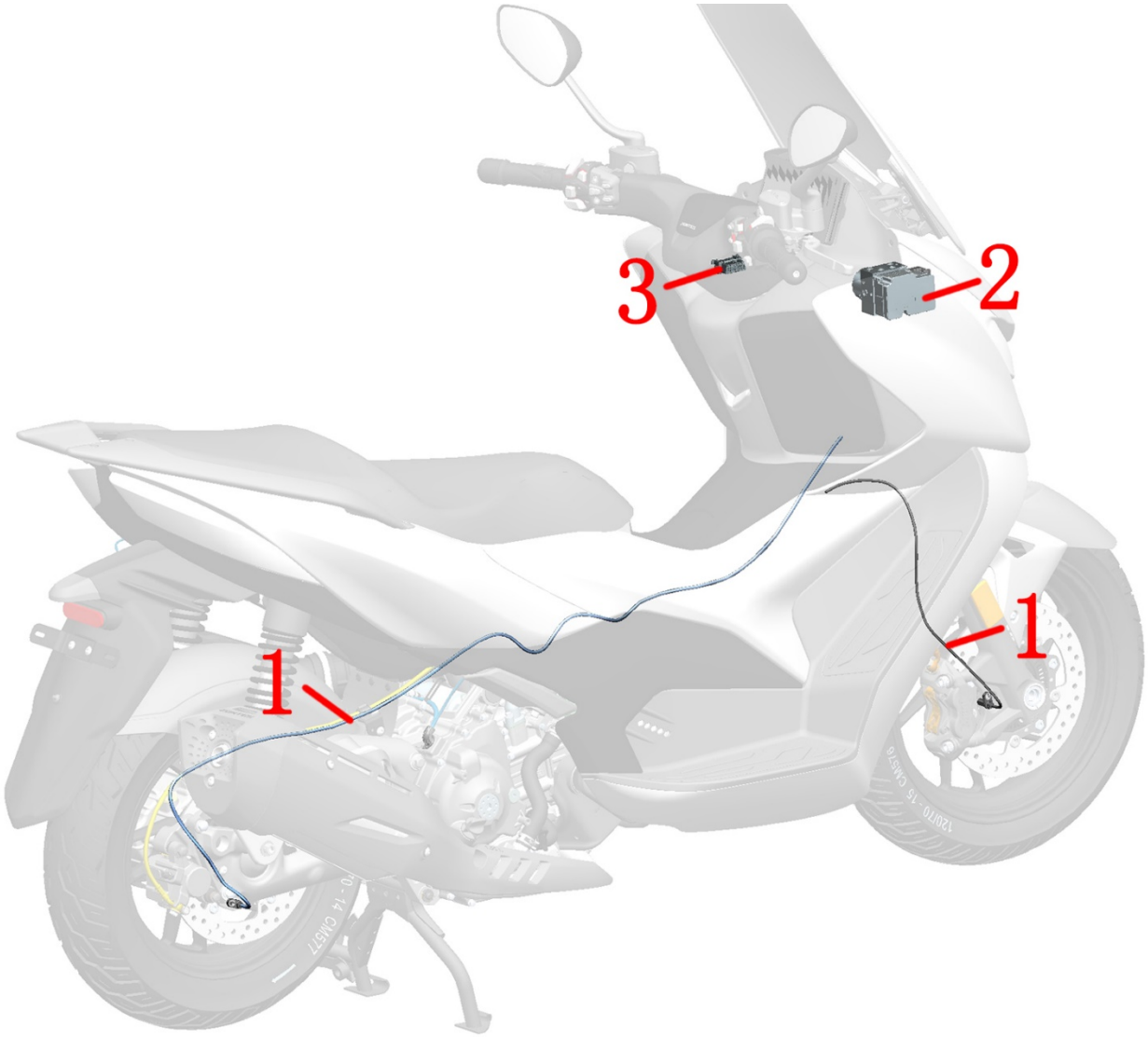

1-Front and rear wheel speed sensor 2-ABS hydraulic control unit 3-OBD diagnostic interface

ABS hydraulic control unit

Caution:

●Before disassembling the hydraulic control unit, the positive and negative electrodes of the battery must be disassembled to prevent damage to electrical components caused by misoperation.

●Brake fluid is toxic, so it needs to be protected. For specific precautions, please refer to the pre-service instructions.

●Be careful not to bend or bend when disassembling the brake hose connector. The cable connector has an anti-trip buckle and cannot be pulled out forcibly. After removing the hose, prevent foreign matter from entering.

●Before reassembling the hose connector at the hydraulic control unit, apply a small amount of brake fluid to the thread.

●After replacing the new hydraulic control unit, you need to refill the brake fluid and exhaust the air to ensure that the brakes are restored to normal before driving the vehicle.

Disassemble

a. Refer to the steps to remove the cover and remove it to the figure first.



b.Refer to the previous steps to release the brake fluid, remove the 4 hose connectors and unplug the cable connectors.

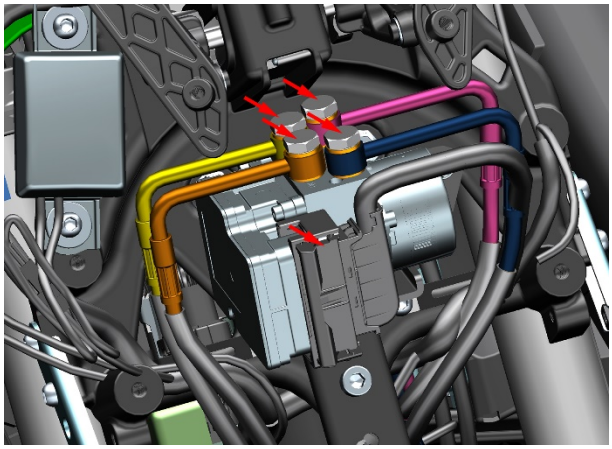

D350/D250/D155

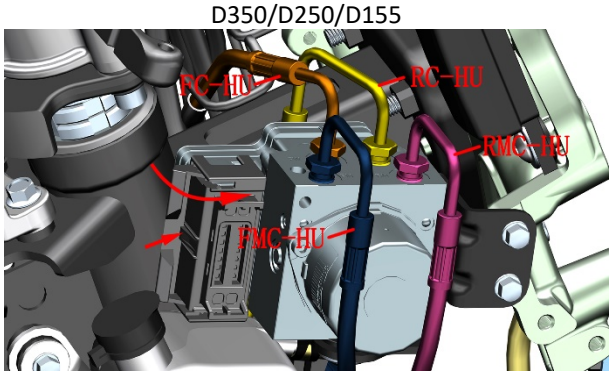

D125

c. Remove the 2 bolts that were put back in the front (1) Remove the hydraulic control unit and bracket assembly from the car.

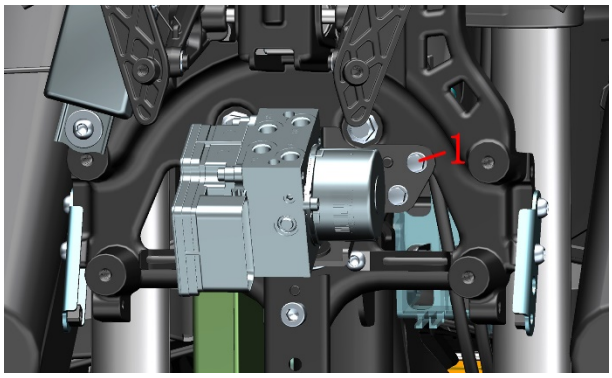

d. After holding the hydraulic control unit firmly, use 4# inner hexagon to remove the bolt(2), then the hydraulic control unit(5) can be removed. If you need to replace the bracket(4), you need to remove the flanging bushing(3) and the cushion rubber(6).

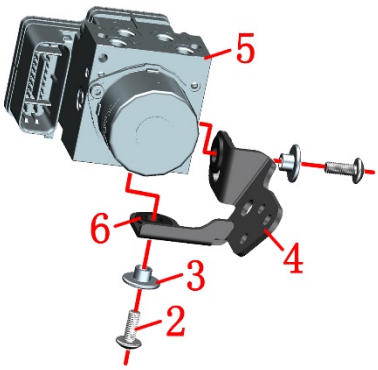

ABS troubleshooting

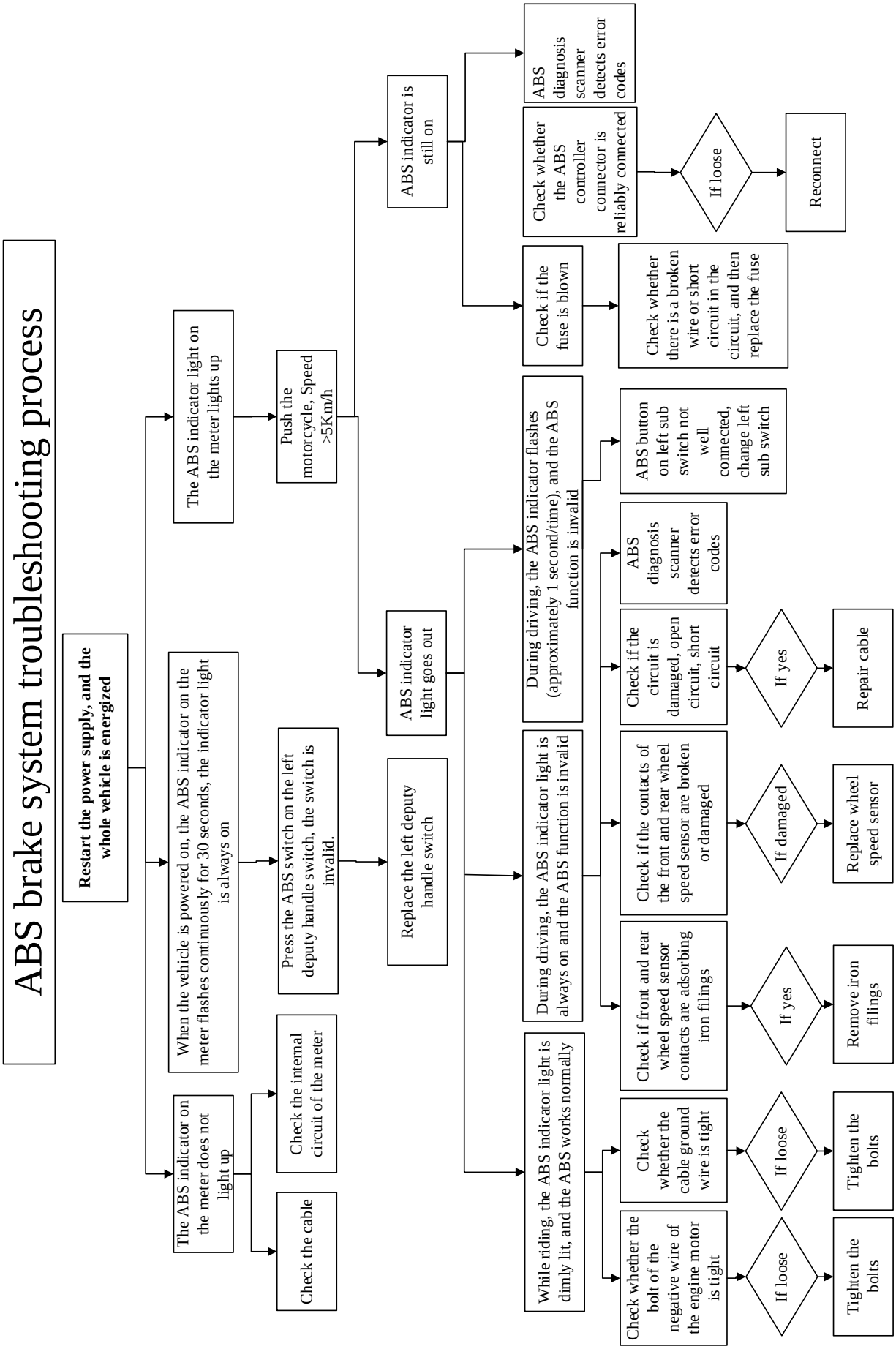

9. Battery/charging system

Know Before Service

1. It is necessary to properly dispose of discarded batteries to avoid pollution to the environment. It is recommended that waste batteries be returned to a professional recycling agency for recycling.
2. It is forbidden to use chargers that have not passed the inspection to charge the battery.
3. The EFI system needs to be reset when the battery is reinstalled, the power is suddenly cut off during driving, the idling speed is abnormal, and the insurance is re-plugged. The specific method is as follows:
   a. Unlock the vehicle and support the main bracket;
   b. Pinch the brake and start the vehicle;
   c. Pull the engine speed above 3000 rpm;
   d. After releasing the throttle, turn off the flameout switch and lock the car;
   e. After waiting for 5 seconds, unlock the vehicle again to complete the reset of the EFI system.
4. The vehicle should be powered off before disassembling the battery.
5. Before troubleshooting the charging system, check whether the battery is in normal use and maintenance. Check with the owner whether you often use high-power electrical appliances, or do not drive a motorcycle for a long time, or turn on the lights for a long time without starting the vehicle.



●When the engine cannot be started, do not press the electric start button frequently. Frequent operation can cause overheating or damage to the starter motor, flooding of the tank, and battery feed.
●When the vehicle is energized, connecting or unplugging the plug may cause damage to some electrical components.
●Overcharge or undercharge, or long-term discharge may cause damage to the battery.

Troubleshooting

Battery damage or attenuation troubleshooting process

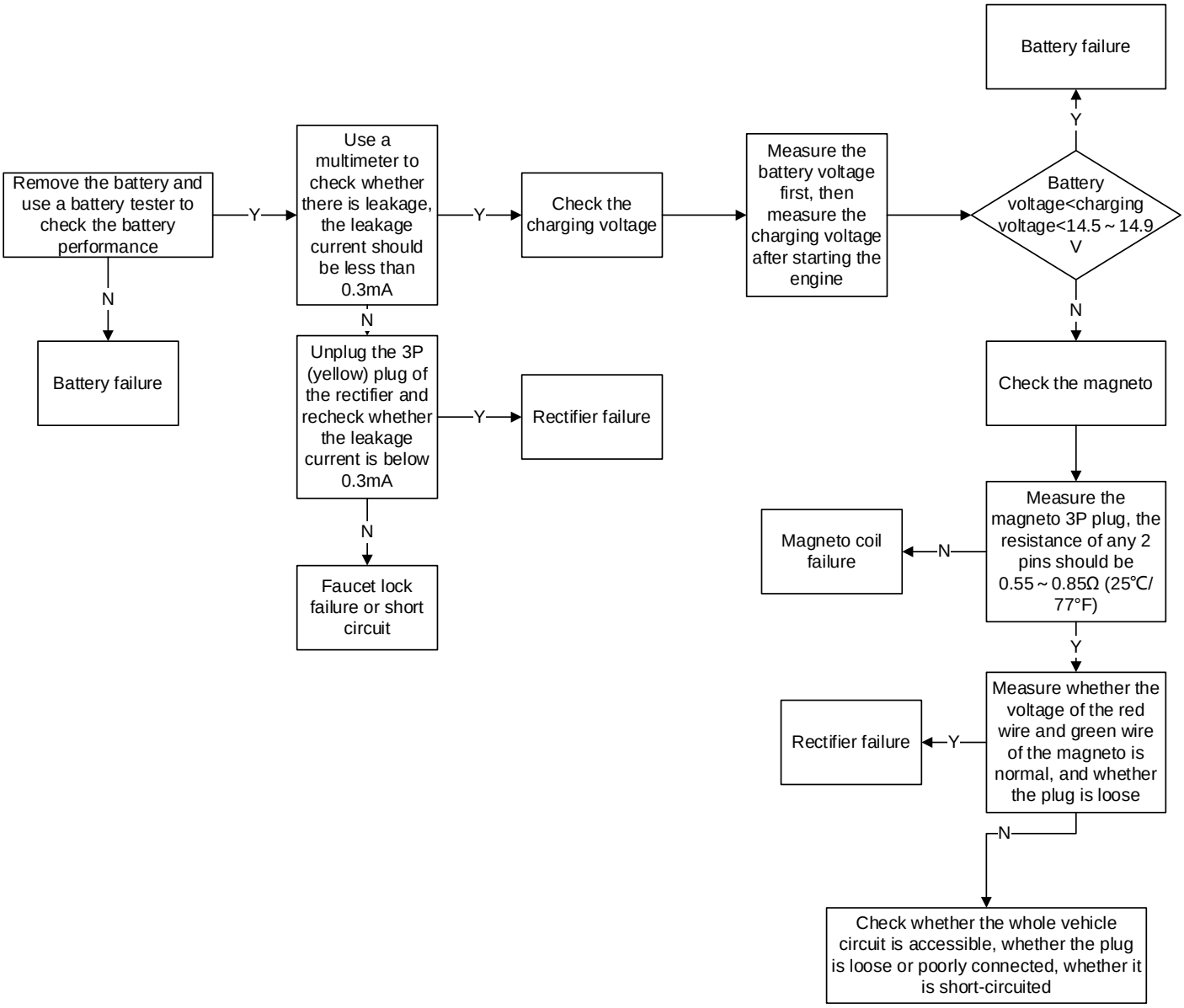

Charging system layout diagram

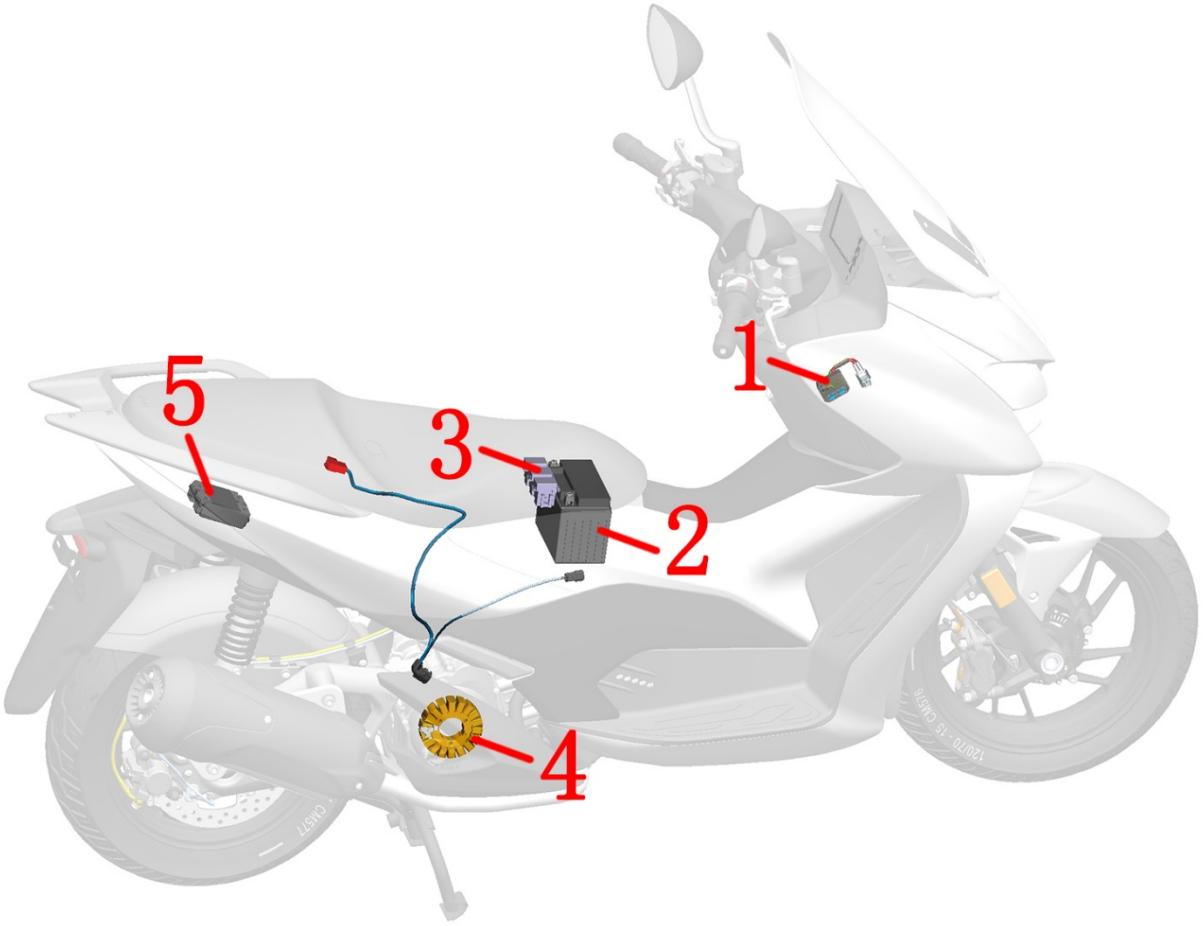

D350/D125/D250

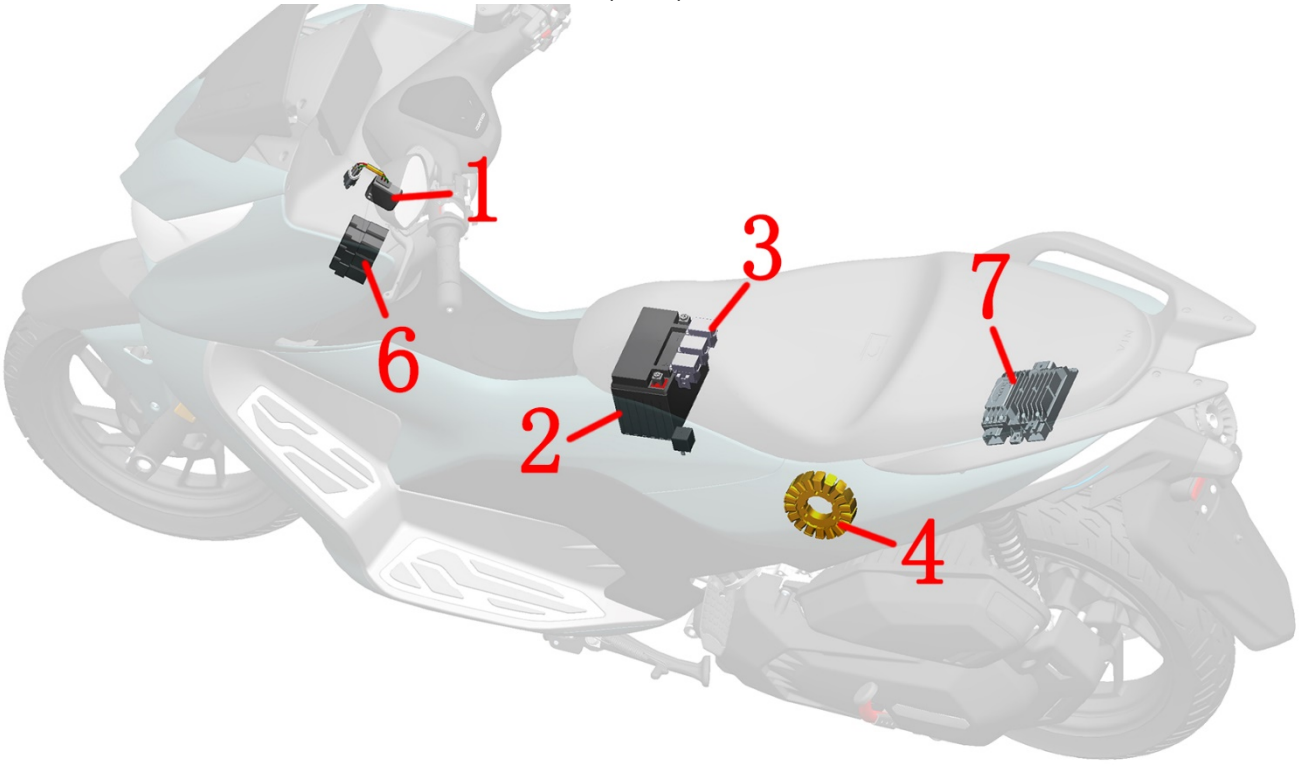

D155

1-Charging port (PKE) 2-Main fuse (25A) 3-Battery 4-Magnetic motor 5-Rectifier(D350/D250/D125) 6- Relay 7- start-stop controller(D155)

Electrical schematic diagram
D368/D350/D250/D125

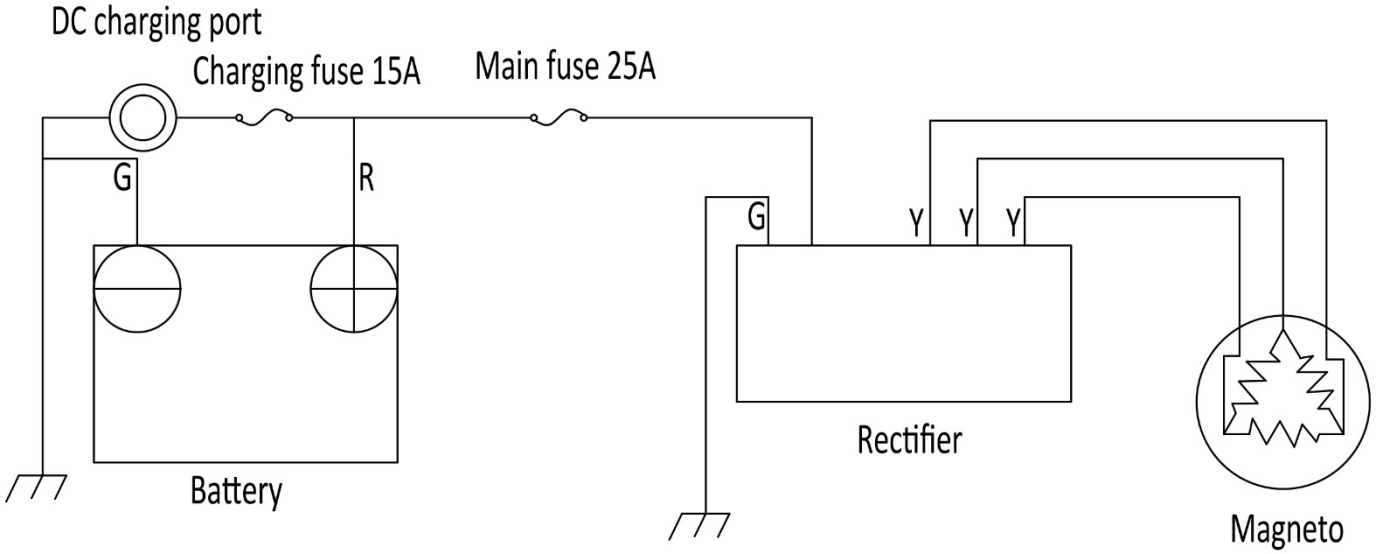

Letter	G	R	Y
Chinese	green	Red	yellow
English	Green	Red	Yellow

D155

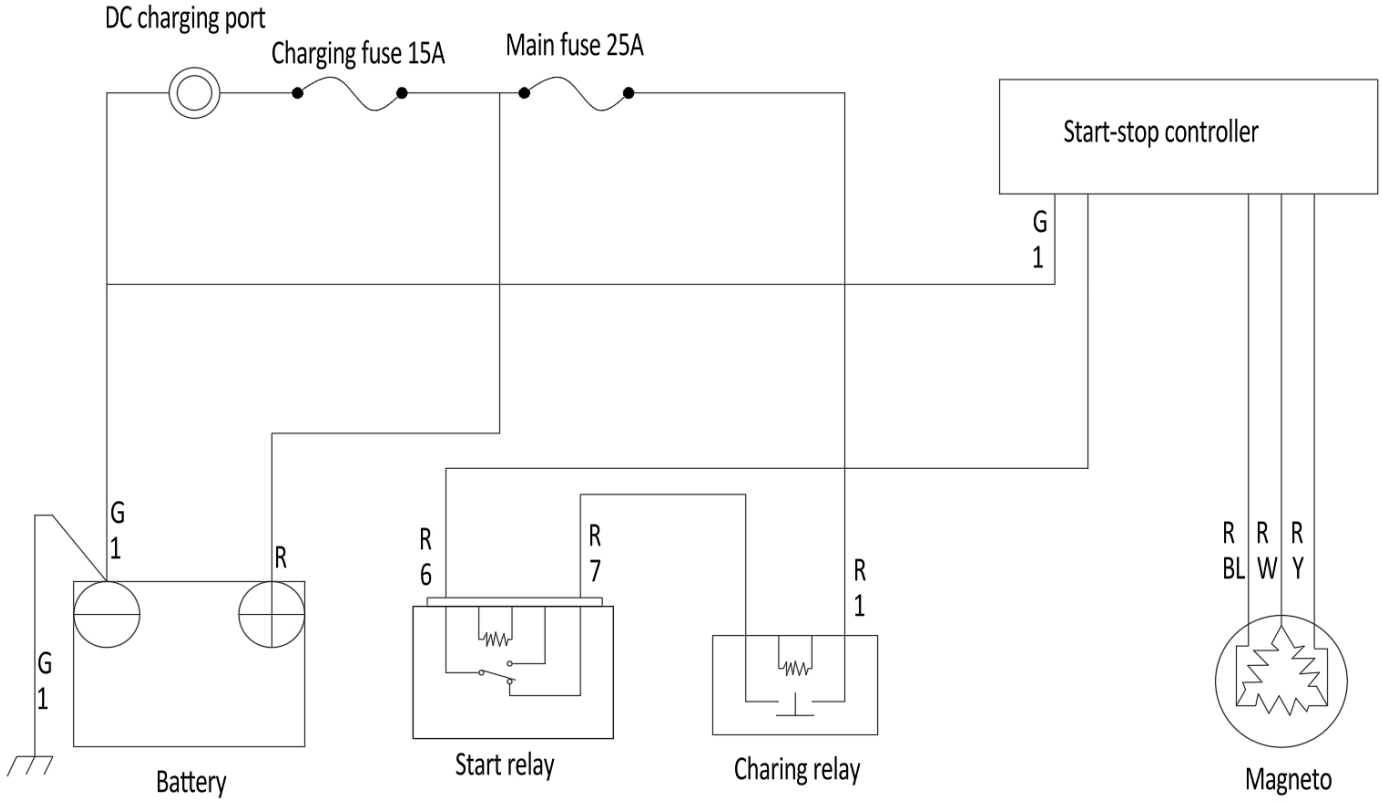

Letter	G	R	Y	BL	W
English	Green	Red	Yellow	Blue	White

Battery disassembly

1. Disassembly

Refer to the steps “a” to “d” in the section "Removing the stepper motor and cleaning the carbon deposit" in the section "Throttle valve body" in the "Maintenance" chapter of this manual to remove the battery.

Caution:

●The whole vehicle must be powered off before disassembling the battery.

●The negative pole must be removed first, and then the positive pole. The opposite is true when installing.

●The positive and negative electrode protective caps must be covered when reinstalling.

●After removing the battery, reset the meter time and reset the EFI system.

2. Check

Open the cushion, remove the battery cover and remove the protective caps of the positive and negative electrodes, and use a multimeter to measure the battery voltage. Note that the vehicle should be turned off before measuring the voltage.



Voltage	Full voltage	13.1～13.3V
	Charging voltage required for unloaded car	≤12.8V
	Charging voltage required for loading	≤12V

Caution:

●The battery that has just been charged should be placed for about 30 minutes before measuring. The voltage of the battery that has just been charged will fluctuate.

3. Charging

If the battery cannot be started due to insufficient power, it can be charged with the charger provided with the car. Open the right storage box cover and remove the cover to see the DC charging port that comes with PKE. The battery can be charged after unplugging the rubber plug. For specific steps, please refer to the section "Checking the battery voltage" in the chapter "Inspection of sound, light, and electrical devices" in the chapter "Maintenance", or the instructions delivered with the car.

Charging system check

1. Leakage test

a. Turn off the vehicle and cut off the power supply, and remove the negative wire of the battery.

b. Adjust the multimeter to the current position. Connect the black test lead to the negative terminal of the battery and the red test lead to the removed negative wire. Pay attention to first adjust the current to the high gear, and then gradually reduce to the appropriate gear.

c. Measure whether the leakage current is below 0.3mA. If it exceeds the standard value, check whether the circuit has a short circuit.

2. Check the charging voltage

Caution:

●Before testing, make sure the battery is in good condition.

●Do not disconnect the battery or any electrical devices before the whole vehicle is powered off.

a. First warm up the engine to normal operating temperature, and then turn off the engine.

b. Connect the red test lead of the multimeter to the positive electrode of the battery and the black test lead to the negative electrode directly. Adjust the multimeter to the 20V DC voltage range. Turn on the high beam of the headlights and start the engine. Measure the charging voltage when the engine speed is 5000 rpm.

standard:

Battery voltage<Charging voltage<15.5V

3. Inspection of magneto stator charging coil

a. Remove the storage box, find the yellow 3P plug of the rectifier above the frame tube on the left side of the rear of the frame and unplug it.

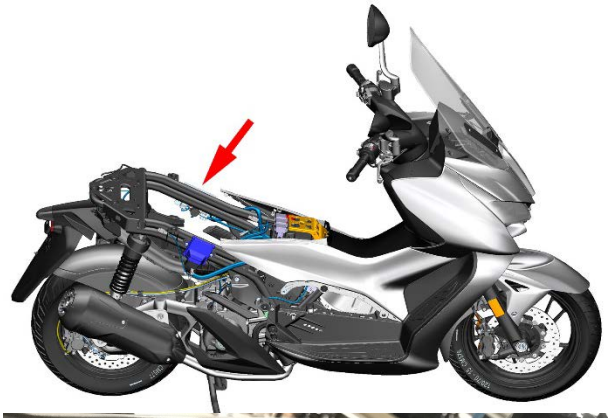

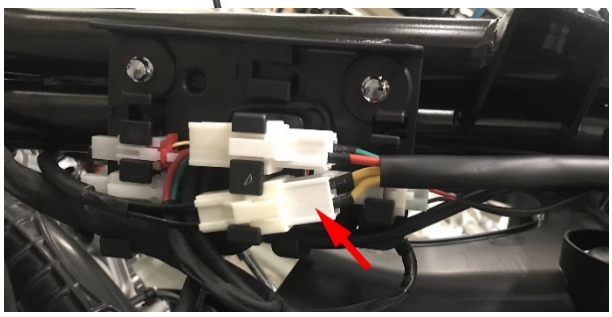

b. Check whether the plug is loose or corroded.

c. Use the resistance profile of a multimeter to measure the resistance of any two wires of the black 3P plug. The standard is 0.55～0.85Ω (25℃/77°F).

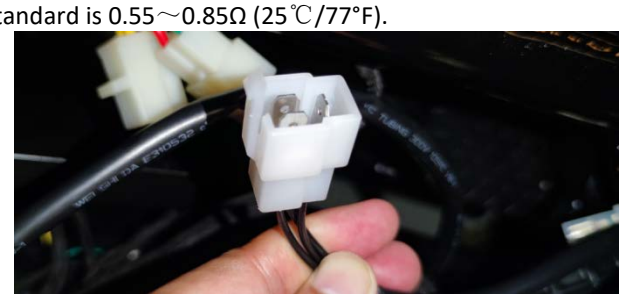

d. After unplugging the yellow 3P plug, measure the red positive wire and green negative wire with a multimeter, and the battery voltage should be measured. Use the buzzer file of the multimeter to check whether the green negative wire and the ground wire (the ground wire can be found in any stud directly connected to the frame) are always conducting.

D368/D350/125/250 Remove the rectifier

a. Remove the rear tail group and tail lamp according to the steps of "Replace the rear shock absorber". Find and untie the tie on the right side of the frame and unplug the two connectors of the rectifier.



b. Refer to the steps of "Remove the rear armrest and rear apron". Use 4 # hex socket to remove the two M6's connecting the rear inner mud pan to the frame × 14 Shoulder bolt (1) and one M6 × 16 Bolts (2).



c.Production of vehicles by September 2023: Remove 2 bolts from the bottom with 8 # short socket, and then pull the rectifier and rear fender assembly down for a certain distance to facilitate the extraction of rectifier cable.

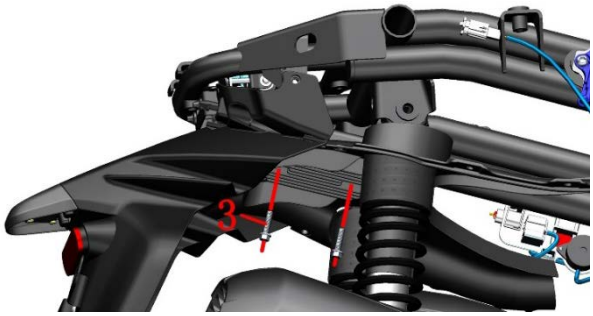

d.Production of vehicles after September 2023:Secure the top nut with 10# plum wrench.Remove 2 bolts from the bottom with 8 # short socket,and then remove the two gaskrts andbushing.





e. Pull down the rectifier and pull the cable out of the hole in the front of the rear mud board. Remove the rectifier from the car. When pulling out the cable, be careful not to pull it forcibly to avoid damaging the plug or pulling off the wire.



D155 Remove the start-stop controller

a.After sorting out the harness, grasp the start-stop controller and unplug the three plugs on the controller.(Note: Do not disassemble by force to avoid damaging the controller.) Take out the start-stop controller.

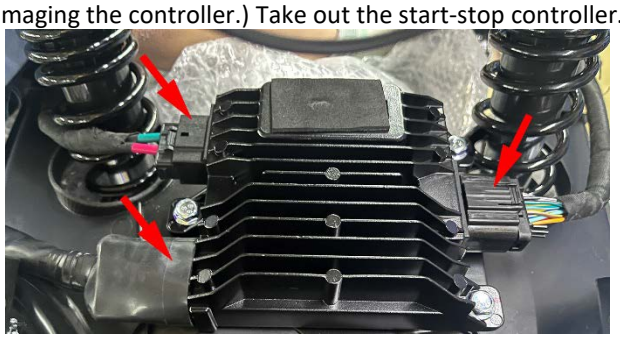

b.After firmly removing the start-stop controller, remove two M6×16 bolts and two bushings at the bottom with 10 # sleeve, and then remove the start-stop controller assembly.Remove 3 M6×16 bolts with 10 # sleeve to separate the start-stop controller from the bracket.

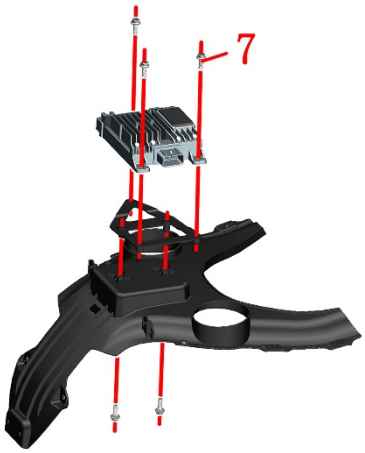

10. Front fork assembly

Know Before Service

1. Use good quality tools, or special tools and fixtures designed by our company. The use of inferior tools may cause damage to parts, peeling of plating, improper assembly, etc.
2. The O-rings, paper gaskets, copper gaskets, and component seals used for sealing must be replaced before assembly.
3. Fasteners with torque requirements need to use a torque wrench to check the torque; if the torque is not required, refer to the general torque value recommended by general fasteners.
4. Clean up before assembly; after assembly, check whether the assembly is correct and in place.
5. The vehicle should be parked in a balanced manner and pay attention to safety during disassembly and assembly. Including but not limited to the use of electric tools, hand tools, pneumatic tools, hydraulic tools, handling; prevent contact with skin, eyes, burns, etc.
6. The replaced oils, liquids, batteries, etc. must be recycled and handed over to a qualified organization for disposal; it is forbidden to dump them at will to pollute the environment or water sources.
7. Swallowing or inhaling coolant, brake fluid, etc. will cause certain harm to the human body. Any exposed skin such as hands and face should be cleaned thoroughly after each addition. If swallowed by mistake, immediately contact the poison control center or hospital; if inhaled, immediately go to a ventilated environment. If it accidentally splashes into the eyes, immediately rinse the eyes with a large amount of running water and seek medical advice or consultation in time. Keep away from children and pets.
8. When replacing the front wheels, jacks or similar devices are needed to support the entire vehicle.
9. Contaminated disc brake discs and disc brake pads will reduce the braking effect. Please replace with new disc brake discs and clean the contaminated brake discs.
10. When the front wheel is removed, please do not operate the brake handle.
11. After the front wheel is installed, please press the brake handle repeatedly until the brake restores the braking effect.

Only part of the basic requirements for matters needing attention, prevention of accidental injury, etc. can be listed; it is not possible to list all situations in detail. Be vigilant during disassembly and assembly to prevent accidents.

Exploded view of front fork components:
D368/D350/D250 Directional exploded view

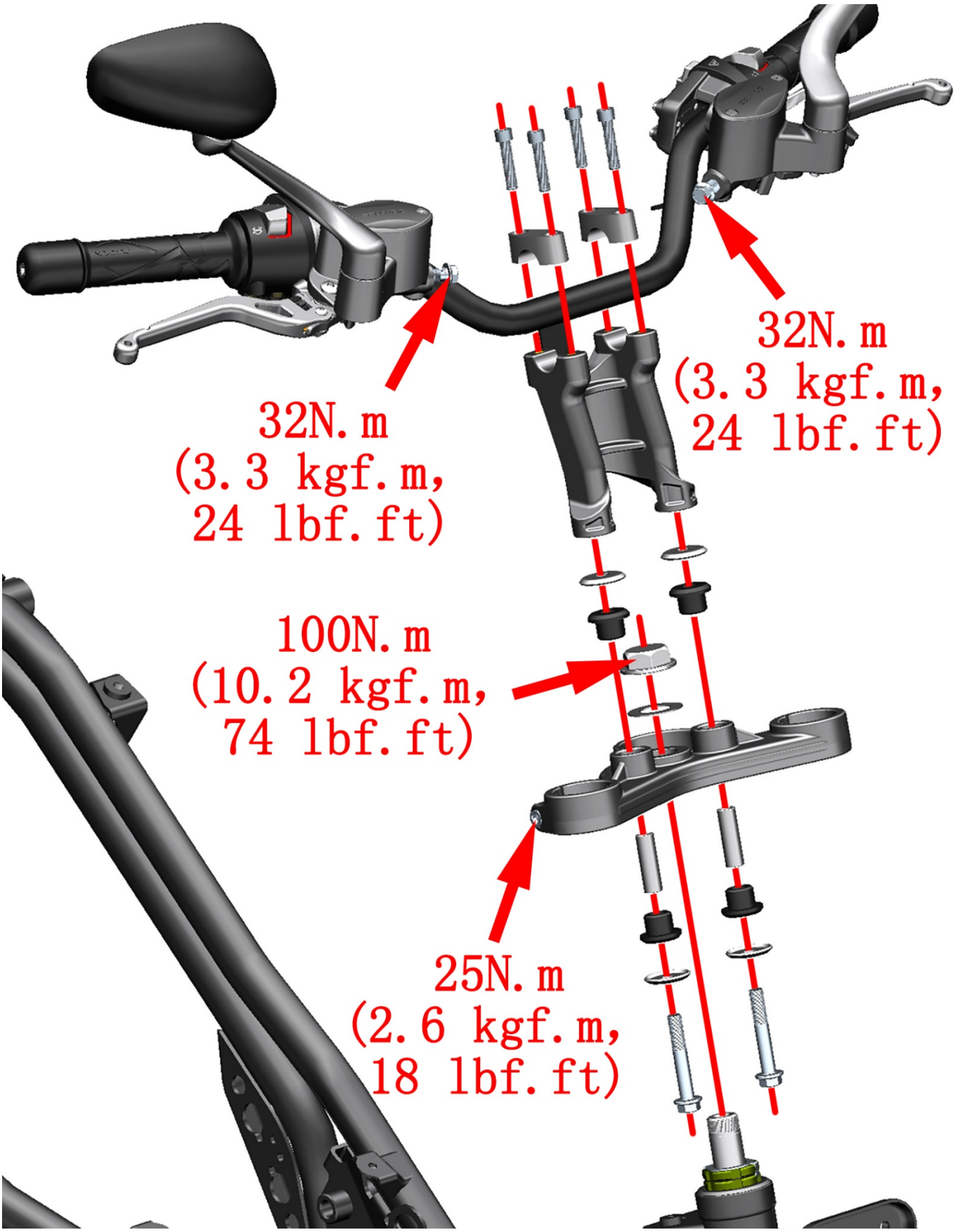

D125 Directional exploded view

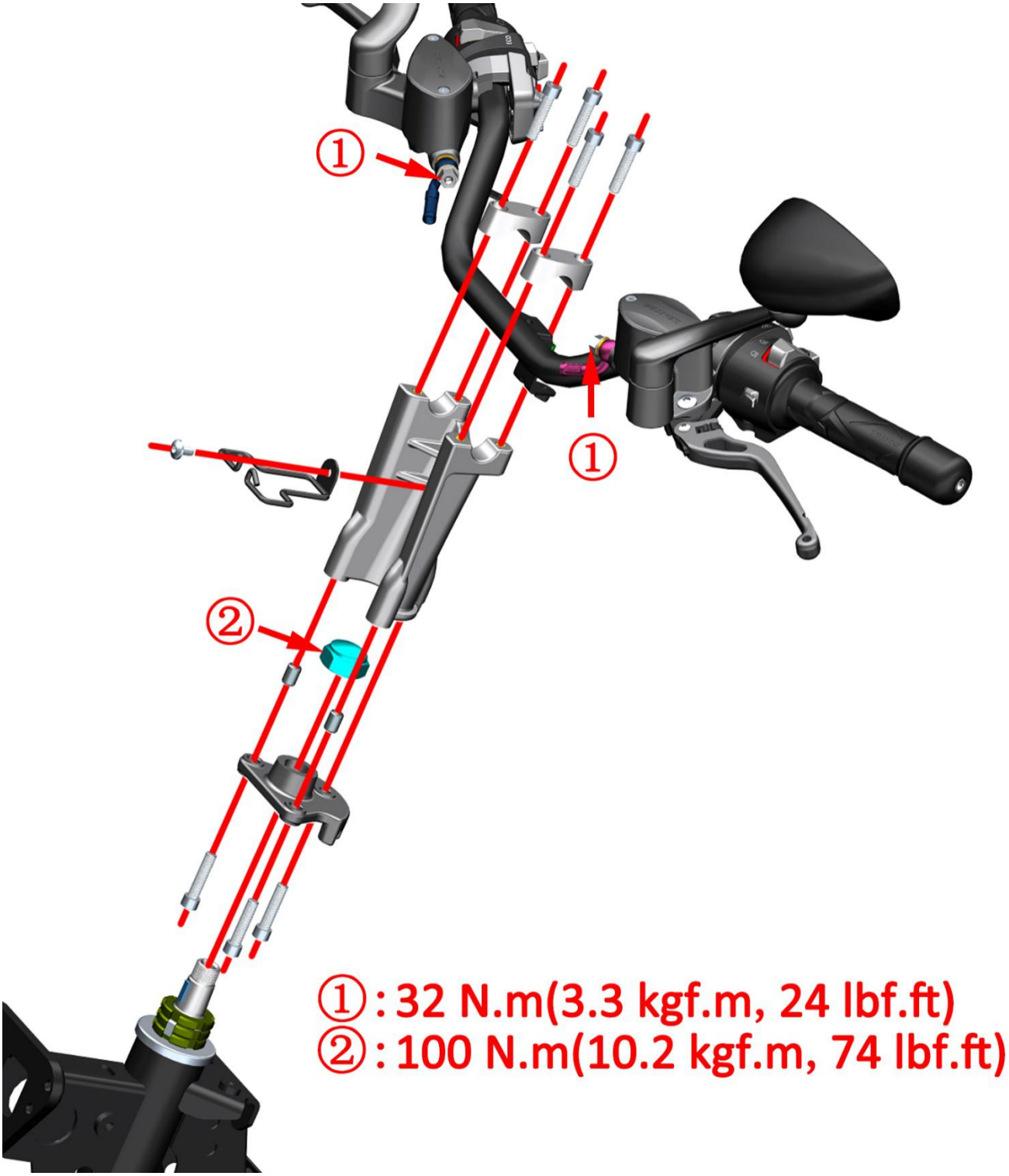

D125(2024)/D155

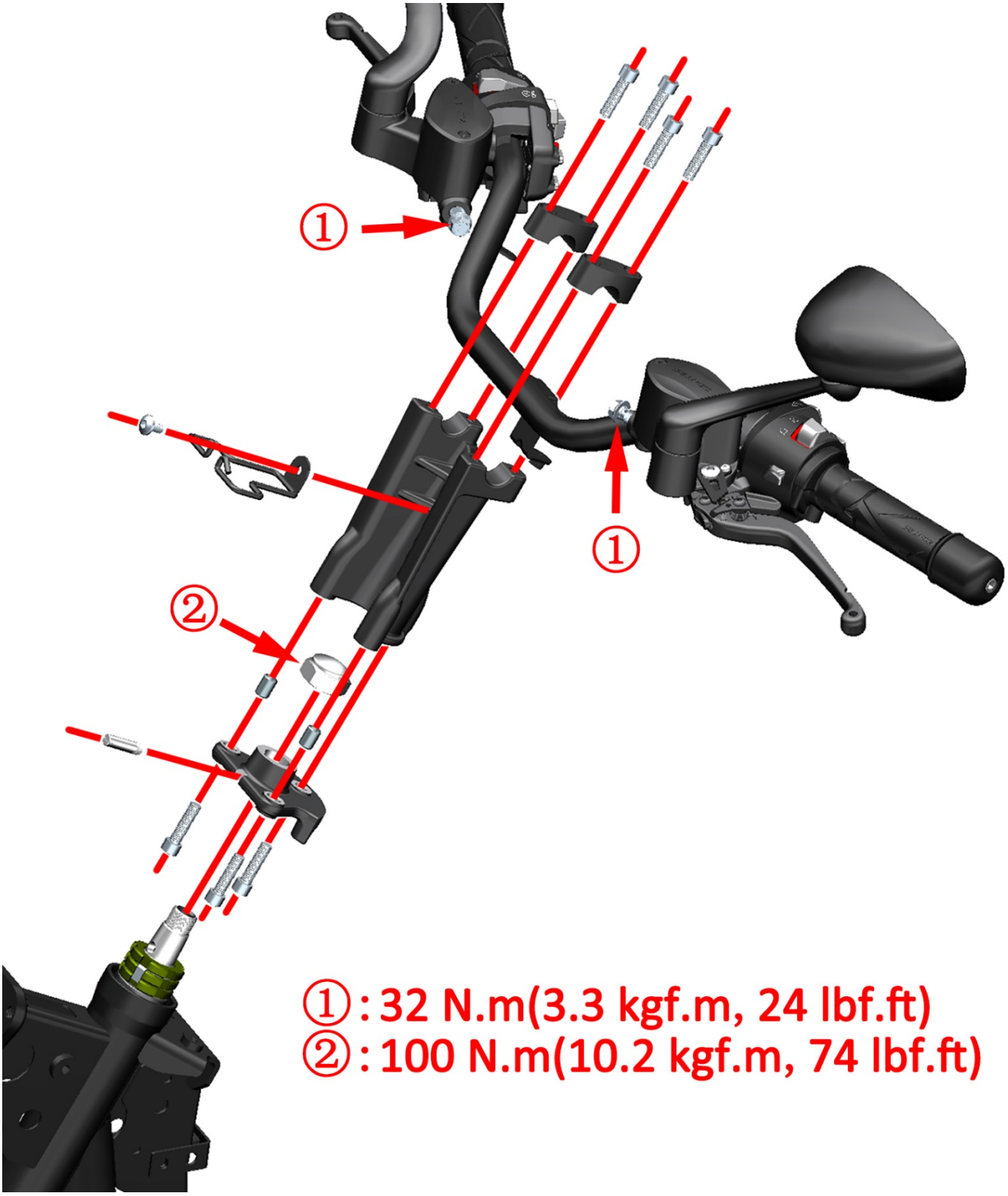

Front fork exploded view
D350/D250/D368

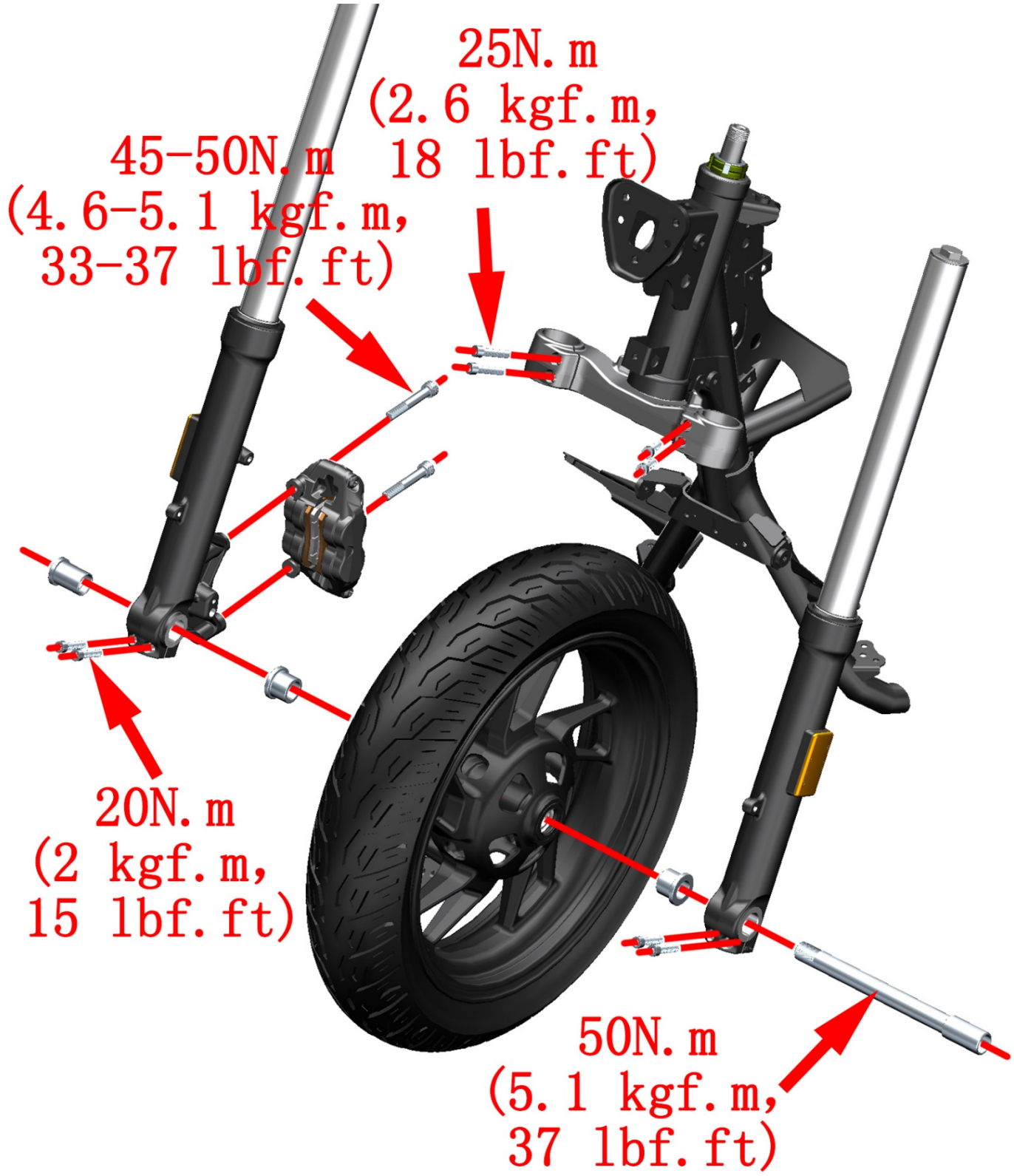

D125/D155

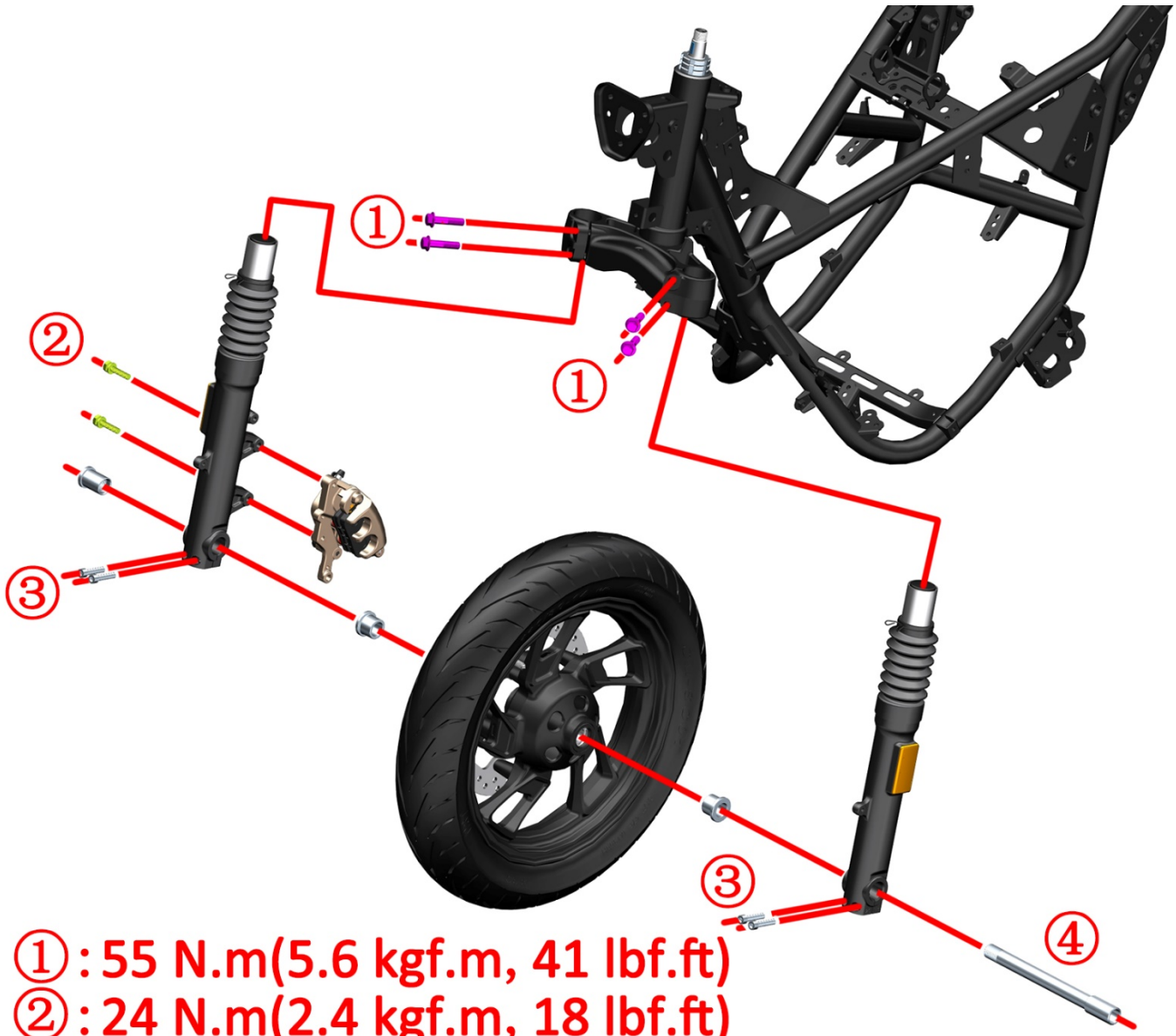

①:55 N.m(5.6 kgf.m, 41 lbf.ft)
②:24 N.m(2.4 kgf.m, 18 lbf.ft)
③:20 N.m(2 kgf.m, 15 lbf.ft)
④:50 N.m(5.1 kgf.m, 37 lbf.ft)

Exploded view of lower link board
D350/D250/D368



D125

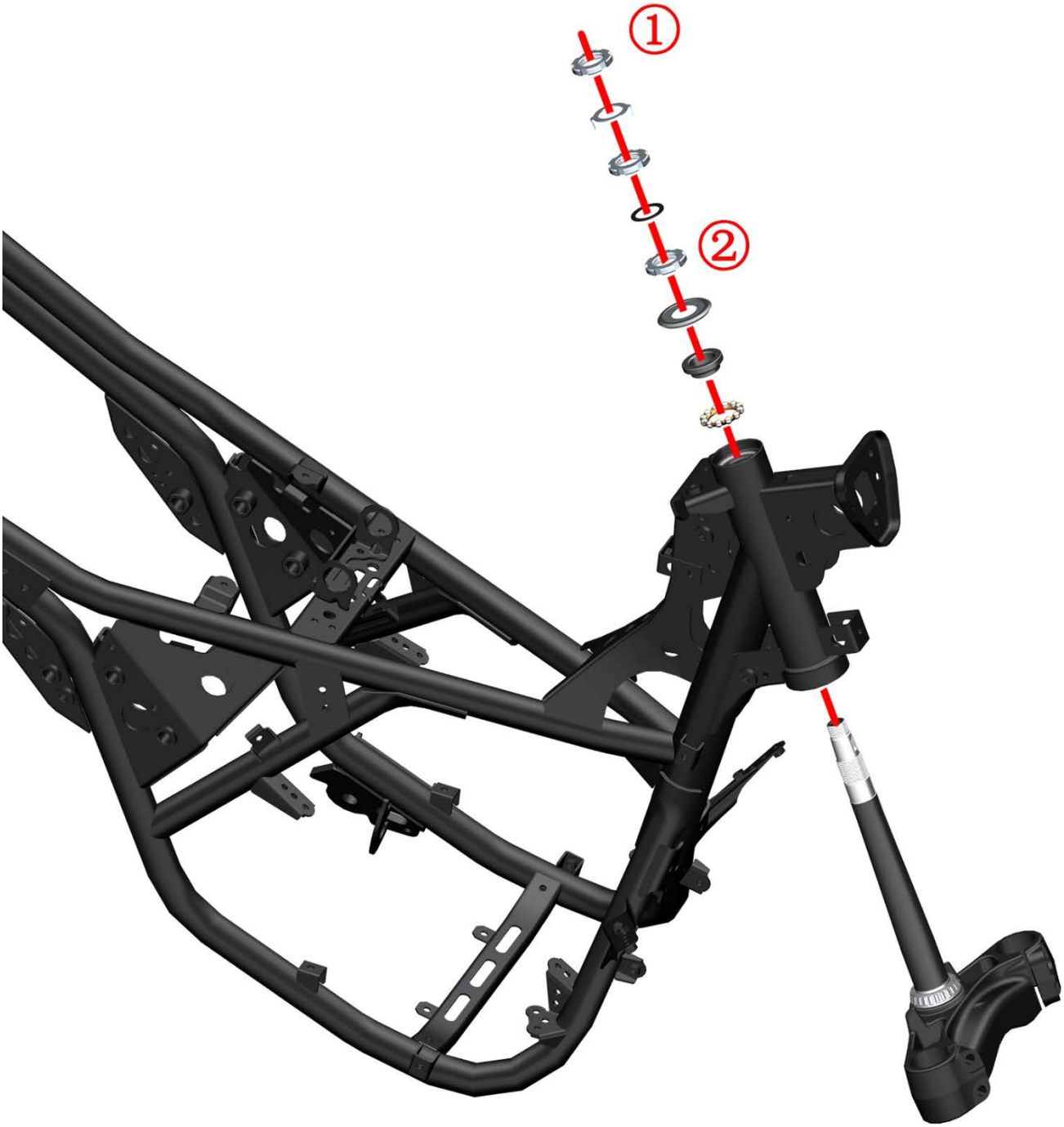

①: 100 N.m(10.2 kgf.m, 74 lbf.ft)
②: 15 N.m(1.5 kgf.m, 11 lbf.ft)

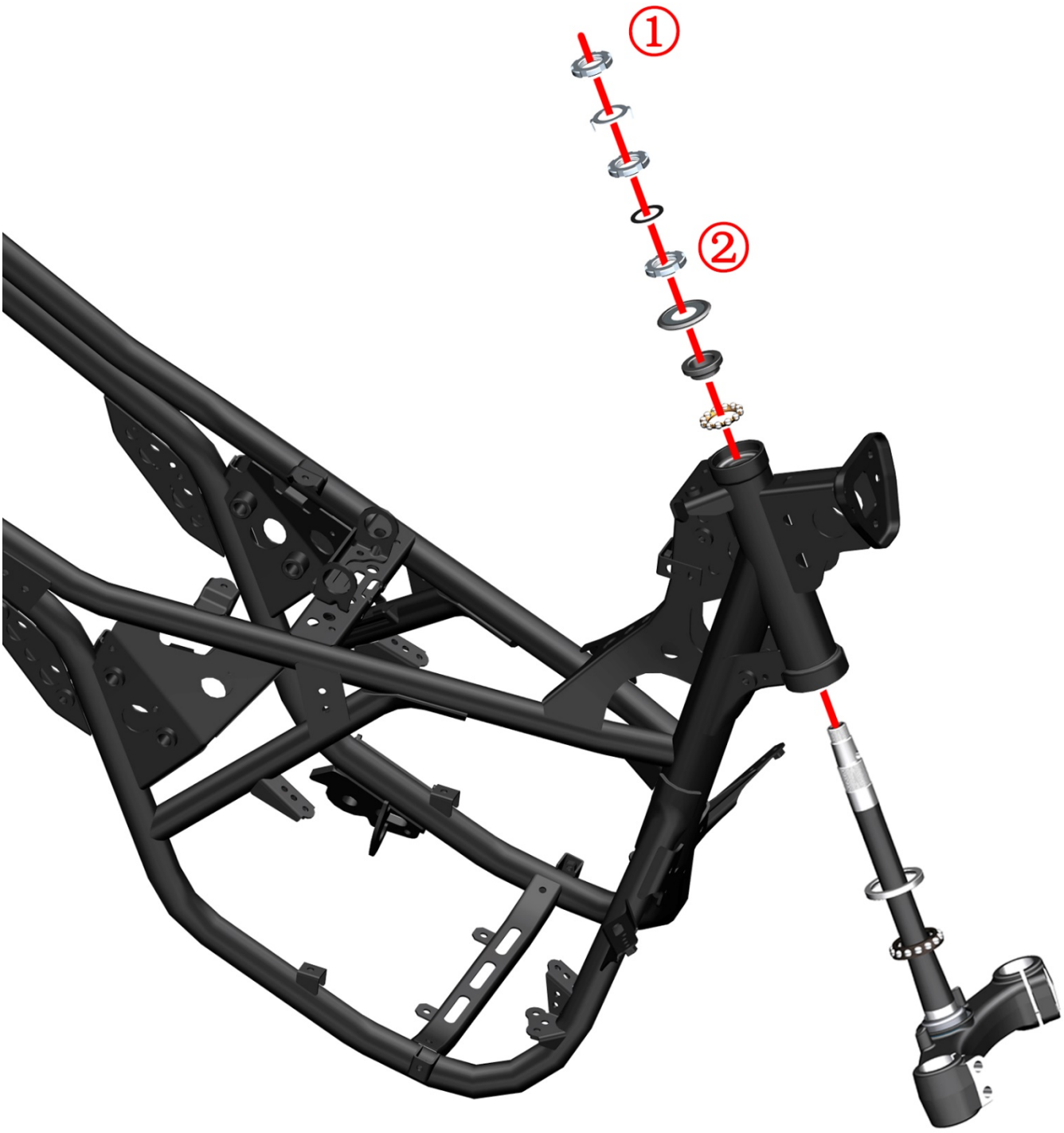

①：80 N.m(8.2 kgf.m, 59 lbf.ft)
②：13 N.m(1.3 kgf.m, 10 lbf.ft)

Change the direction of the handle

Caution:

●When removing the disc brake oil cup, it must be vertically upward to prevent air from entering the brake pipeline.

●When disassembling and assembling the handle switch, pay attention to adjusting the internal wiring harness of the switch to avoid damage to the wire skin caused by the shell or bolt column.

●The D125 steps are similar to the D350, taking the D350 as an example.

1. Remove the direction of the handle

a. Hold the middle cover in the direction with your hands, and pull out the middle cover in the direction of the arrow.

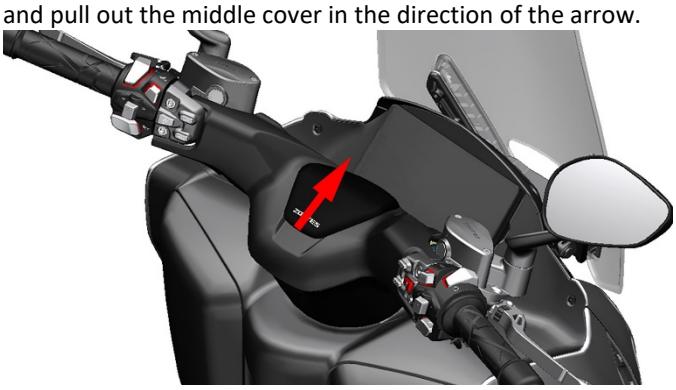

b. Use a cross screw to remove the two self-tapping ST3.9×12 screws at the lower cover, and use a straight screw to pry off the buckles at① and②.

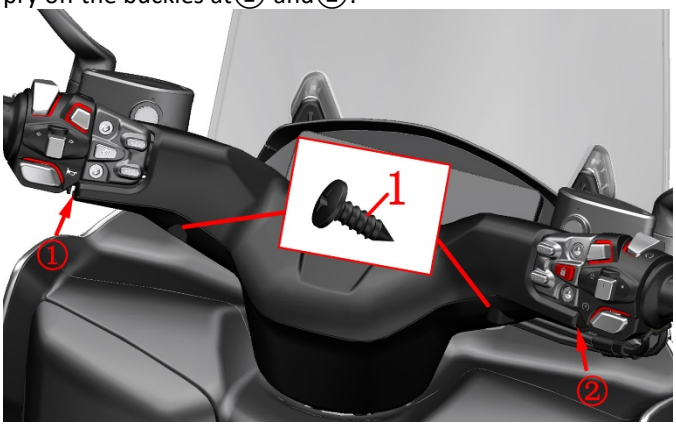

c. Use a single word batch to pick up the 3 buckles③, ④, ⑤ of the upper cover from the hole of the middle cover in the direction, grasp the direction near the side of the seat cushion, and remove the upper cover in the direction of the arrow. The direction of the upper cover.

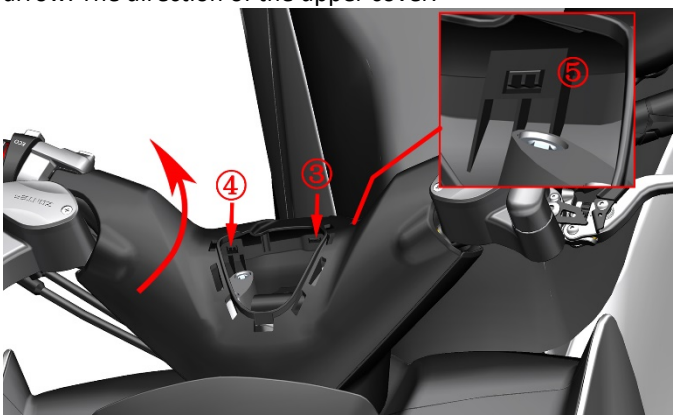

2. Remove the components

a. Use 5# inner hexagon to remove 4 M6×30 bolts(2), and remove the left auxiliary handle switch, the rear disc brake main pump, the right auxiliary handle switch, and the front disc brake main pump.

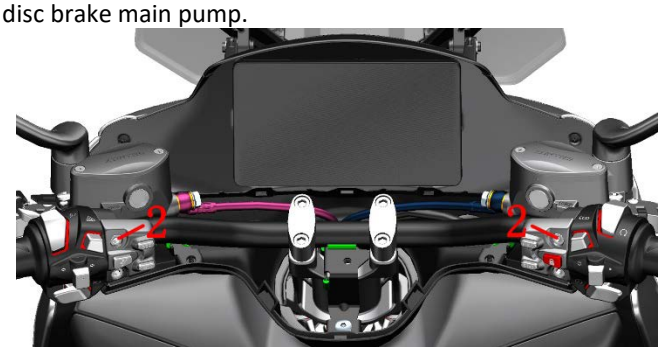

b. Use 4# inner hexagon to remove the M6×14 bolt(3); then use 6# inner hexagon to remove 4 M8×35 bolts(4), remove 2 pressure blocks, and take out the direction handle assembly.

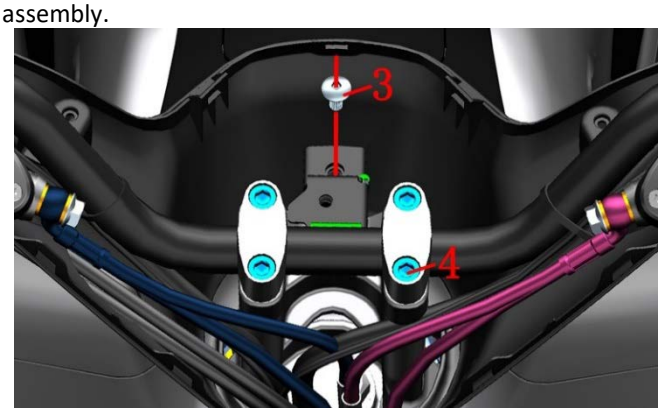

c. Use 5# inner hexagon to remove the bolts (5a) and (5b) that come with the right-hand handle under the switch, and then use the cross-batch to remove the bolts (5c), and separate the upper and lower parts of the right-hand handle.

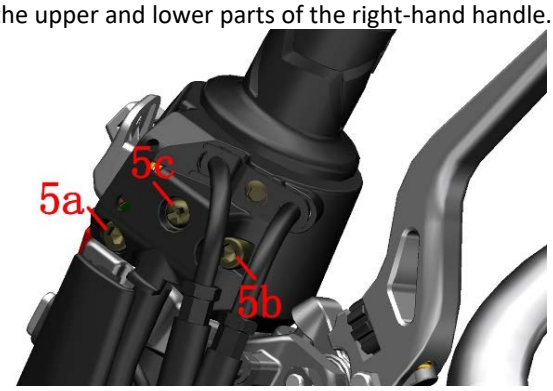

d. Remove the bolts (6a) and (6b) under the left-hand handle switch with a 5# inner hexagon, and then remove the bolts (6c) with a cross-batch, and separate the upper and lower parts of the left-hand switch.

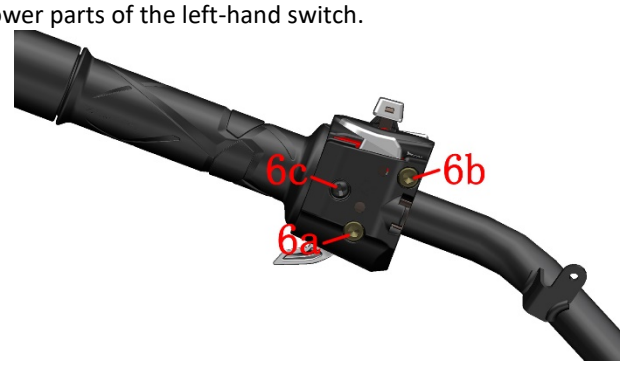

e. Unscrew the M6 provided by the right balance weight with 5 # hexagonal socket counterclockwise × 80 bolts, be careful not to screw them too many times, otherwise the nut of the balance weight will fall into the handle and increase the difficulty of disassembling the balance weight. Put the 5 # socket head onto the bolt head and then use a rubber hammer to tighten the M6 × 80. Knock the bolt inward to loosen the buffer rubber and nut of the balance weight to facilitate the removal of the balance component. Grasp the balance weight, shake it up, down, left and right, and pull it out at the same time. Use the same method to pull out the left balance block, soak it in hot water for about 10 minutes, and then blow into the space between the left handlebar rubber sleeve and the handlebar tube with a dust blower as indicated by the arrow. Then pull the handlebar and the handlebar rubber sleeve in the opposite direction, and take out the handlebar rubber sleeve.

Right:



Left:



3. Installation of the direction component

a. Apply 263 thread fastening glue to the inner wall of the rubber sleeve in the left hand, and the length of the glue is 1/3 of the rubber sleeve of the handle, and then put the rubber in the left hand into the direction handle; the inner wall of the rubber sleeve in the right hand does not need to be coated with the thread fastening glue. Just load it. Be careful not to remove the throttle cable on the rubber sleeve with your right hand. Reinstall the left and right balance weights according to the disassembly steps, and tighten the M6×80 bolt with a 6# inner hexagon.

b. When installing the left and right handlebar switches, it is necessary to align the bolts (5c) and (6c) with the positioning holes ⑥ on the handlebar, and then tighten them with a cross screwdriver. Use the 5 # hexagonal socket to tighten the bolts (5a), (5b), (6a), (6b) that fix the left and right handlebar switches in turn.



c. When installing the auxiliary handle switch, align the joint surface of the auxiliary handle switch and the main pump of the disc brake with the triangle mark on the handle switch, and then tighten the 4 M6×30 bolts with a 5# inner hexagon.



d. Snap the upper brackets⑦,⑧, and⑨ into the lower part of the direction control cover, buckle the pressure block, tighten 4 M8×35 bolts with 6# inner hexagon, and Use 4# inner hexagon to remove the M6×14 bolt.



4. Installation of the direction handle cover

a. When installing the upper cover in the direction, first install the upper cover in the appropriate position, first buckle the buckles “a”, “b”, and “c” on the front of the upper cover in the direction, and then buckle the back buckles③,④,⑤ and The buckles① and② on both sides should be fastened. After installation, the upper cover should be tightly fitted with the lower cover, and the gap should be even. Finally, tighten the 2 self-tapping screws at the lower cover (1) with a flat-head screwdriver.

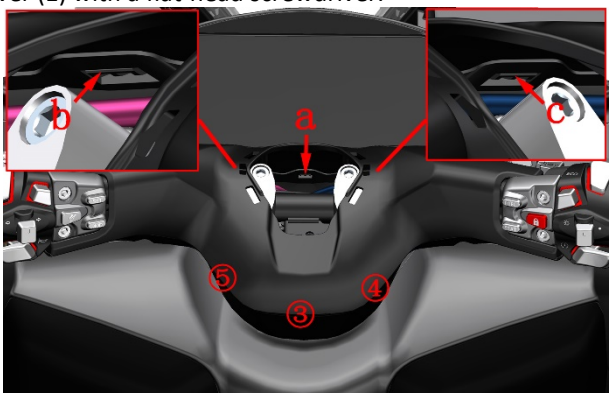

b. Finally, put the direction back on the middle cover.

⚠WARNING

●Attention should be paid when disassembling the direction handle cover to prevent damage to the buckle.
●After installation, check whether the throttle cable is assembled in place and whether the return position is flexible.
●Self-tapping screws need to be installed vertically and the torque cannot be too large.
●After installation, check the switch buttons of the left and right handle switches and the left and right auxiliary handle switches to check whether they can be used normally, and check whether there is a pressure line.

Replace the front wheel

Caution:

●Be careful not to damage the ABS coil when disassembling.

●After removing the front wheel, do not press the brake handle.

●The vehicle must be parked on a flat and stable ground or a lifting platform.

●It is forbidden to use a high-pressure water gun to flush against the oil seal at close range.

●The D125/D250 steps are similar to the D350, taking the D350 as an example.

1. Remove the front wheel assembly

a. Lay down the main support, and then use a jack or a suitable device to support the whole vehicle to keep the front wheels off the ground.

b. Use 6# inner hexagon to loosen the two M8×35 bolts at the front left shock absorber (1), then use 17# inner hexagon to remove the front wheel shaft (2), and remove the front wheel and 2 bushings. 45～50N.m(4.6～5.1 kgf.m，33～37 lbf.ft)

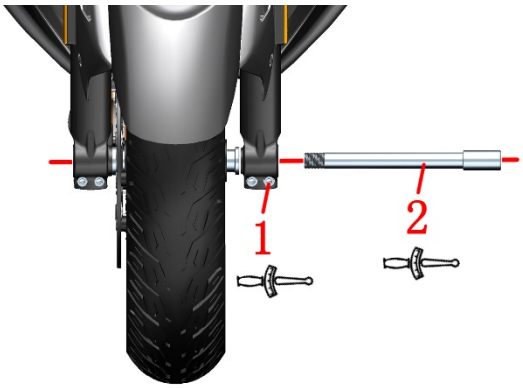

2. Install the front wheel assembly

a. Separate the two brake pads in the brake caliper with a single-size batch. If the resistance is too large and the two brake pads cannot be separated, please refer to the method of "Adding Brake Fluid" to remove the upper cover of the disc brake oil cup and then separate it. 2 brake pads.

b. Put the front wheel in the middle of the front shockabsorber, shake the front wheel left and right to make thedisc brake disc snap into the middle of the brake pad, alignthe shaft hole, insert the front wheel shaft(2), tighten thefront wheel shaft with 17# inner hexagon, torque: 50N. m(5.1 kgf.m, 37 lbf.ft), after the front wheel axle is tightened, forthe left front wheel bushing of 125/150/155/250, there isa gap of approximately 2.5mm with the shock absorber, whilethat of 350/368 is about 2mm. Use 6# inner hexagon totighten the two front left shock absorbers M8×35 bolt (1),torque: 20N.m (2.0 kgf.m, 15 lbf.ft).

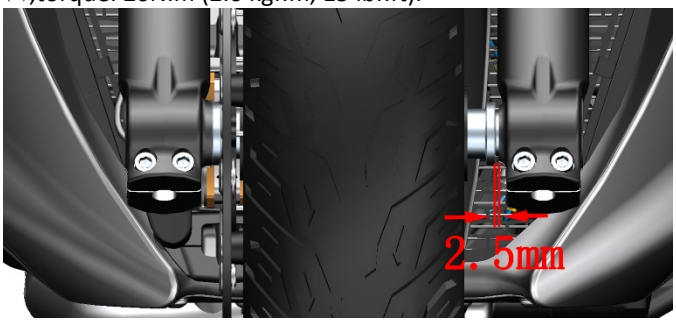

DANGER

●After the front wheel is installed, please press the brake handle repeatedly until the brake restores the braking effect.

●Contaminated disc brake discs and disc brake pads will reduce the braking effect. Please replace with new disc brake discs and clean the contaminated brake discs.

WARNING

●After each front wheel replacement, you must go to a professional organization for dynamic balance testing.

●Because the tire self-refilling may block the air hole of the tire pressure monitoring sensor, causing difficulty in inflation or failure of the tire pressure monitoring, it should not be used.

Front wheel assembly exploded view:

D368



NO.	Part name	QTY	Caution
1	Oil seal TC ϕ28×ϕ42×7	2	
2	GB276 bearing 6004-2RS-C3	2	ϕ20×ϕ42×12
3	Sleeve	1	
4	Tire pressure sensor	1	
5	265×5.0 brake disc	1	
6	Non-standard torx bolt M8×25	5	25 N.m(2.5 kgf.m，18 lbf.ft)　T45 torx wrench

D350/D250



NO.	Part name	QTY	Caution
1	Oil seal TC ϕ28×ϕ42×7	2	
2	GB276 bearing 6004-2RS-C3	2	ϕ20×ϕ42×12
3	Sleeve	1	
4	Tire pressure sensor	1	Bend toward the left.
5	ABS sensor gear（56T）	1	
6	265×5.0front brake disc	1	
7	Non-standard bolt M8×25	5	25 N.m(2.5 kgf.m，18 lbf.ft)

8	GB12615 ϕ3.2×9 rivet (stainless steel)	5	

D125/D155

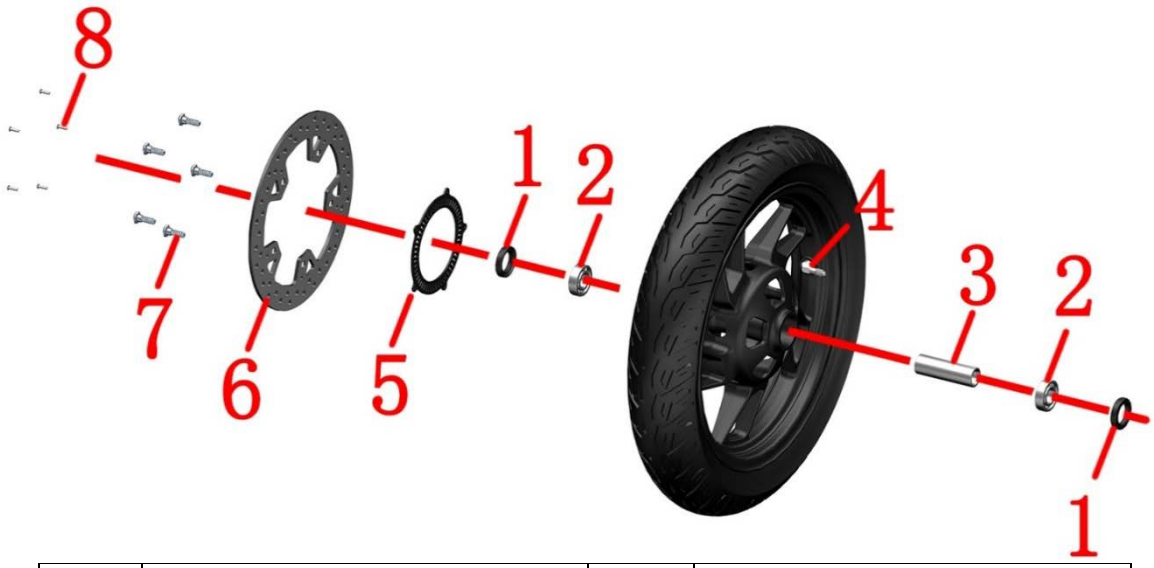

NO.	Part name	QTY	Caution
1	Oil seal TC ϕ28×ϕ42×7	2	
2	GB276 bearing 6004-2RS-C3	2	ϕ20×ϕ42×12
3	Sleeve	1	
4	Tire pressure sensor	1	
5	ABS sensor gear（55T）	1	
6	265×4.5 brake disc	1	
7	Non-standard bolt M8×25	5	25 N.m(2.5 kgf.m，18 lbf.ft)
8	GB12615 ϕ3.2×9	5	

Inspection and maintenance of front wheel assembly：

Caution:

●This inspection should be completed by a qualified maintenance organization.

●Do not press the brake handle after the front wheel is disassembled

●Be careful not to damage the ABS coil when disassembling.

●The vehicle must be parked on a flat and stable ground or a lifting platform

●It is forbidden to use a high-pressure water gun to flush against the oil seal at close range.

1. Disc brake

1.1 The service life of the disc brake disc

Under normal circumstances, the replacement mileage of the brake disc is about 40,000 kilometers. The replacement mileage is not absolute. It needs to be determined according to the owner's travel habits (whether you like sudden braking), road conditions, maintenance intervals and other factors, but if the following three conditions are reached If any of them, they must be replaced.

a. Use a vernier caliper to measure the thickness of the D125/155 disc brake disc less than 4.mm (0.16 in),and the thickness of the M350/D250 is 4.5mm(0.177 in).

b. Hang the front wheel in the air, observe from the front that the disc brake disc swings when the front wheel rotates, and the disc brake disc deformation is detected.

c. Touch the surface of the disc brake disc with your hands to detect obvious pits, visually inspect for deep scratches and grooves.

1.2 Disc brake Replacement method

a. Refer to "Replace the front wheel" Remove the front wheel assembly.

b. Use 6# hex socket to remove 5 M8×25 bolts and remove the damaged disc brake disc.

c. After reinstalling the new disc brake disc, use 5# inner hexagon to tighten 5 M8×25 bolts. Torque: 25N.m (2.5 kgf.m, 18 lbf. ft). The front disc brake disc is a floating disc, and the ABS gear ring is connected to the disc brake disc body by rivets. If you only need to replace the disc brake disc, you need to use a grinding pen to polish off the rivet bulge and then remove the gear ring first. The rivets must be made of stainless steel, not aluminum.

d. Reinstall the front wheel assembly.

2. Front wheel oil seals and bearings

2.1 Service life of front wheel oil seals and bearings

Under normal circumstances, the bearings and oil seals in the front axles need to be inspected within 50,000 kilometers, but the bearings and oil seals in the front axles need to be inspected according to the actual conditions of the vehicle’s driving conditions and the size of the load. Into the oil seal and bearing, the fine dust in the water will accelerate the wear between the bearing and the oil seal. At the same time, the mixed friction of water and grease becomes an emulsion and loses the original lubricating effect. This also shortens the service life between the oil seal and the bearing. When the following conditions occur, the front wheel oil seals and bearings should be checked in advance

a. Abnormal front wheel noise when riding.

b. When the direction bar shakes left and right when riding.

2.2 Replacement method of front wheel oil seal and bearing

a. Remove the front wheel assembly by referring to "Replace the front wheel".

b. Use a flat-headed batch to lift out the oil seals on the left and right sides of the front wheel, check whether the oil seals are damaged or deformed, check whether the outer ring of the bearing fits tightly with the rim, and if there is no abnormality, turn the inner ring of the bearing by hand to check whether the bearing rotates smoothly and if there is a jam. If it is astringent or abnormal sound, the front wheel bearing and oil seal need to be replaced.

c. The replacement of the front wheel oil seals and bearings must be completed by a professional maintenance organization.

d. If there is no problem in the inspection, apply an appropriate amount of lubricating grease on the front wheel bearing, and then press-fit the oil seal to the original position with a suitable size iron rod and rubber hammer.

e. Reinstall the front wheel assembly.

3. Front wheel rims and tires

3.1 The service life of the front wheel rim and tire

Generally speaking, rims do not have the limit of service life and kilometers, but if the following situations occur, the rims must be replaced.

a. The rim is deformed or warped.

b. Cracks or breaks in the rim

Under normal conditions, the front tires can be used for about 20,000 kilometers. Normal conditions mean that the road conditions are not bad and there is no tyre puncture. Because the tires are made of rubber, there will be aging. Generally, the tires need to be replaced in about 4 years. If you don't change it, you need to check frequently to check the tire aging and whether there are cracks in the tire. If the following conditions occur, the tires must be replaced.

a. The tire has been repaired many times.

b. When the tire tread wear reaches the limit position of the design.

c. There are many aging cracks in the tire.

3.2 How to replace the front wheel rim and tire

a. Refer to "Replace the front wheel" to remove the front wheel assembly.

b. Take the removed front wheel assembly to a professional organization and use a tyre raking machine to take out the tires.

c. Use a lifter to assemble new rims or new tires. And the front tire pressure is charged to the standard value. D350 front tire pressure: 240kPa (34.8 PSI),

d. Put the assembled front wheel assembly back on the vehicle.

3.3 Dynamic balance

The wheel is a whole composed of tires and rims. Due to manufacturing reasons, the mass distribution of each part of the wheel may not be very uniform. When the wheel rotates at a high speed, it will form a dynamic imbalance state, causing wheel jitter during driving. The direction of the shaking phenomenon, in order to avoid this phenomenon or eliminate the phenomenon that has occurred, it is necessary to make the wheel in a dynamic situation by increasing the counterweight method to make the wheel correct the balance of each edge part, this correction process Is what we call dynamic balance.

The dynamic balance particles of the wheels can ensure that the wheels are more stable when rotating, reduce vibration and shaking, improve the stability and comfort of the vehicle, and are conducive to safe driving.

a. Please go to a professionally qualified organization to test the dynamic balance after each replacement of the front and rear wheels.

b. The balance weight must be attached to the designated plane (red area) of the rim.



D368/D350/D250 replacement of the front shock absorber

Caution:

●After the front wheel is disassembled, please do not press the brake handle.

●Be careful not to damage the ABS coil when disassembling.

●When disassembling the front fender, be careful not to scratch the shock absorber or the front fender.

●When removing the shock absorber, first remove the 2 bolts that fix the same shock absorber, remove one side of the shock absorber, and then remove the other side.

1. Disassemble the front wheel and front fender assembly

a. Refer to "Replace the front wheel" to remove the front wheel.

b. Remove one M6 with 5 # hexagonal socket × 30 bolts (1), take out the pipe clamp and gasket(5). Remove one M6 with 4 # hexagonal socket × 12 Bolts (3). Use 8 # hexagonal socket to remove 2 M10 × one point five × 60 bolts (2), remove the front brake caliper.

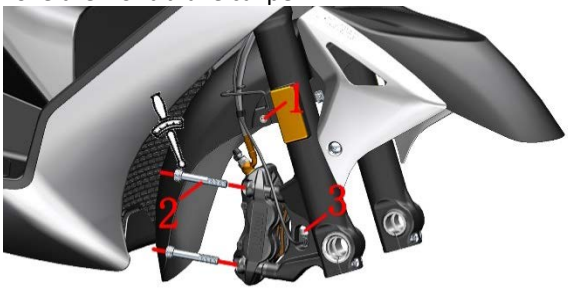

c.Use 4# inner hexagon to remove the two M6×14 bolts(4) on the left and right sides of the front fender; then use 5# inner hexagon to remove one M6×30 bolt(1), take out the gasket(5).

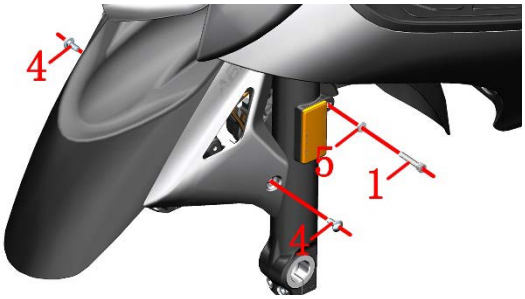

d.First press the two sides of the front mud board according to the small arrow, press the protrusion on the front mud board arrow inward, and then move the front mud board up to a suitable position and then pull it out in the direction of the big arrow.

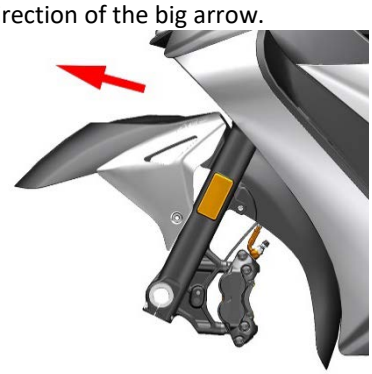

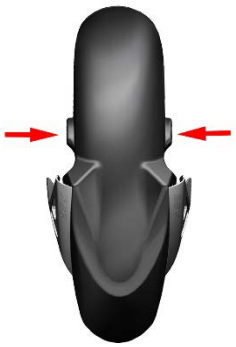

2. Remove the left and right front shock absorbers

a. Press the two buttons indicated by the arrows to open the storage box trim cover. Remove the two expansion nails (red circle) on the left and right storage box covers with the 4 # hexagonal socket. Remove the left and right storage box covers.

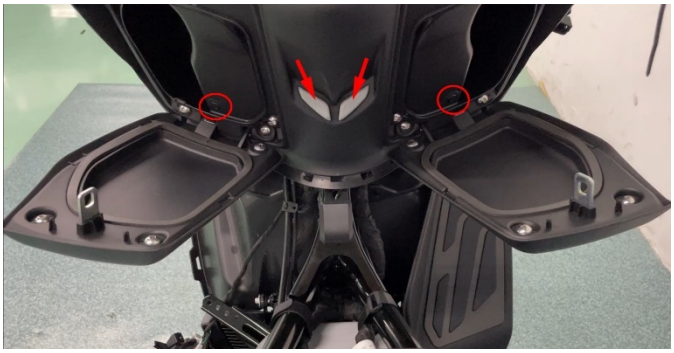

b. Turn the steering handle to the left and remove M8 with 6 # hexagonal socket × 35 bolts (6). Using the same method, turn the steering handle to the right and remove the bolt (6). Pry the gap on the upper connecting plate with a screwdriver.

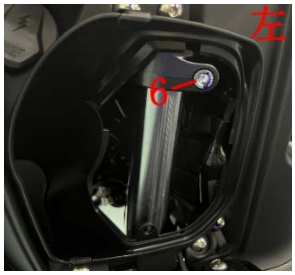



c. Remove M8 with 6 # hexagonal socket × 4 bolts (6) of 35, pry the gap on the lower yoke plate with a screwdriver, and remove the left front shock absorber and the right front shock absorber.

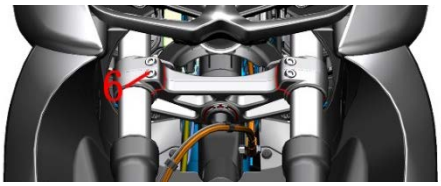

3. Reinstall the shock absorber, front fender, front wheel and other components

a. Use a screwdriver to pry open a gap on the lower yoke plate, insert the corresponding shock absorber, and remove the screwdriver after the shock absorber is installed in place.

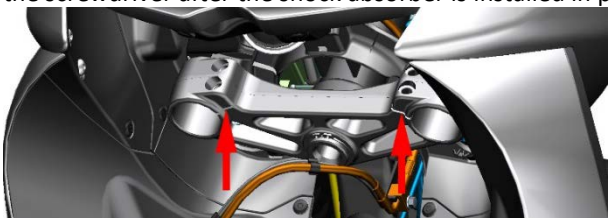

b. Use a screwdriver to pry open a gap on the upper connecting plate, insert the corresponding damping, and remove the screwdriver after the damping is installed in place. Screw in M8 × 35 bolts (6) shall be tightened with 6 # hexagonal socket. Torque: 25N. m (2.6 kgf. m, 18 lbf. ft)。

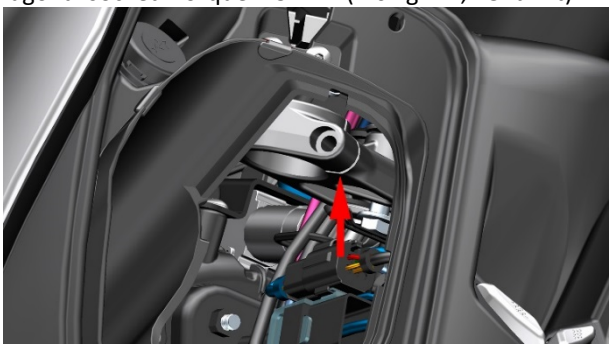

c. Use the same method to install another shock absorber.

d. Pick up the front wheel and install the bushing, align the mounting holes between the two shock absorbers, penetrate the front wheel axle, and tighten the front wheel axle with a 17# inner hexagon. Torque: 50N.m (5.1 kgf.m, 37 lbf.ft). If one of the shock absorbers is not installed in place, the front axle will not be tightened or can not be inserted into the right shock absorber. You need to remove the shock absorber that is not in place and install it in place.

e. After installing the front wheel, use the 6# inner hexagon to tighten the two M8×35 bolts at the bottom of the right front shock absorber, torque: 20N.m (2.0 kgf.m, 15 lbf.ft).

f. First use a single batch to separate the two brake pads inside the brake caliper. If the resistance is too large and the two brake pads cannot be separated, please refer to the method of "Adding Brake Fluid" to remove the upper cover of the disc brake oil cup and then separate it. 2 brake pads, align the gap between the 2 brake pads in the disc brake caliper with the brake disc on the front wheel and install it. Then use a 8# sleeve to tighten two M10 bolts (2), torque: 45～50N.m(4.6～5.1 kgf.m，33～37 lbf.ft).

g. Press and hold the position held when removing the front mud pan, pass through the proper position in the middle of the shock absorber, and install it to the corresponding position, and then use the 4 # hexagonal socket to insert 2 pieces of M6 × 14. Replace the shoulder bolt (4). Then use 5 # hexagonal socket to connect 2 M6 × 30 bolts (1),

Caution: the left M6×30 bolt(1) needs to have a spring washer(5).

DANGER

●The vehicle must be parked on a level and stable ground or on a lifting platform.
●After the front wheel is installed, please press the brake handle repeatedly until the brake restores the braking effect.

D125/D155 replacement of the front shock absorber

Caution:
●After the front wheel is disassembled, please do not press the brake handle.
●Be careful not to damage the ABS coil when disassembling.
●When disassembling the front fender, be careful not to scratch the shock absorber or the front fender.
●When removing the shock absorber, first remove the 2 bolts that fix the same shock absorber, remove one side of the shock absorber, and then remove the other side.
●The D125/D155steps are similar to the D350, taking the D350 as an example.

1. Disassemble the front wheel and front fender assembly

a. Refer to "Replace the front wheel" to remove the front wheel.

b.Use 5# inner hexagon to remove one M6×30 bolt(1), and take out the pipe clamp. Then use a 14# sleeve to remove two M8×37 bolts (2), Remove one Bolts (3) with 4 # inner hexagon. and remove the front brake caliper.

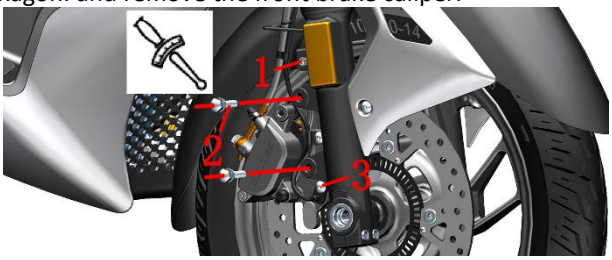

c. Use 4# inner hexagon to remove the two M6×14 bolts(4) on the left and right sides of the front fender; then use 5# inner hexagon to remove one M6×30 bolt(1), take out the gasket(5).

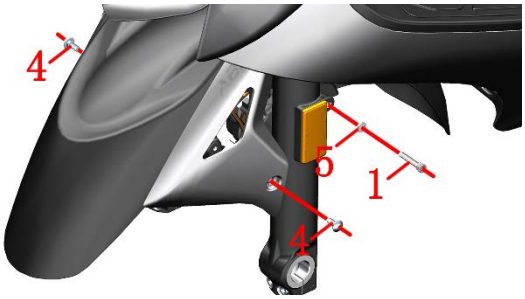

d.First press the two sides of the front mud board according to the small arrow, press the protrusion on the front mud board arrow inward, and then move the front mud board up to a suitable position and then pull it out in the direction of the big arrow.

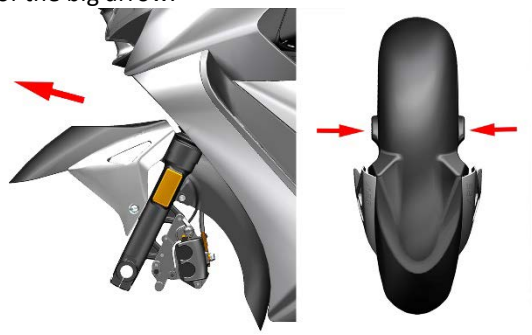

2. Remove the left and right front shock absorbers

a. Use a 14# sleeve to remove the 4 M10×1.5×43 bolts, pry open the gap on the lower link plate with a straight batch, and remove the front left shock absorber and the front right shock absorber.

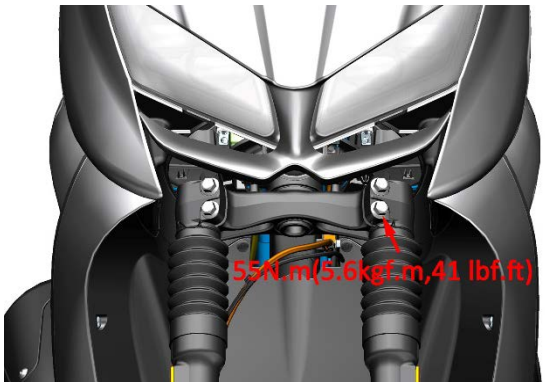

3. Reinstall the shock absorber, front fender, front wheel and other components

a. Pry a gap on the lower connecting plate with a flat-headed batch, insert the corresponding shock absorber, install the shock-absorbing in place, take the next batch, screw in two M10×1.5×43 bolts, use a 14# sleeve Tighten two M10×1.5×43 bolts, torque: 55N.m (5.6 kgf.m, 41 lbf.ft).

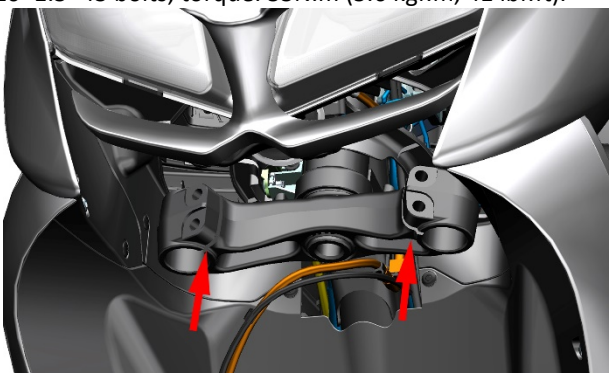

b. Use the same method to install another shock absorber.

c. Pick up the front wheel and install the bushing, align the mounting holes between the two shock absorbers, penetrate the front wheel axle, and tighten the front wheel axle with a 17# inner hexagon. Torque: 50N.m (5.1 kgf.m, 37 lbf.ft). If one of the shock absorbers is not installed in place, the front axle will not be tightened or can not be inserted into the right shock absorber. You need to remove the shock absorber that is not in place and install it in place.

d. After installing the front wheel, use the 6# inner hexagon to tighten the two M8×35 bolts at the bottom of the left front shock absorber, torque: 20N.m (2.0 kgf.m, 15 lbf.ft).

e. First use a single batch to separate the two brake pads inside the brake caliper. If the resistance is too large and the two brake pads cannot be separated, please refer to the method of "Adding Brake Fluid" to remove the upper cover of the disc brake oil cup and then separate it. 2 brake pads, align the gap between the 2 brake pads in the disc brake caliper with the brake disc on the front wheel and install it. Then use a 14# sleeve to tighten two M8×37 bolts (2), torque: 24N.m (2.5 kgf.m, 18 lbf.ft).

f. Press the position held when the front mud plate is removed, pass through the appropriate position in the middle of the shock absorber, and install it to the corresponding position, use the 4# inner hexagon to reinstall the 2 M6×12 bolts (3), do not miss the installation of the lining Set(4), and cushion rubber(5). Then use the 5# inner hexagon to reinstall the two M6×30 bolts(1), Caution: the left M6×30 bolt(1) needs to have a spring washer(5).

DANGER

●The vehicle must be parked on a level and stable ground or on a lifting platform.

●After the front wheel is installed, please press the brake handle repeatedly until the brake restores the braking effect.

Replace the lower link board

Caution:

●After the front wheel is disassembled, please do not press the brake handle.

●When the disc brake oil cup is removed, it must be vertically upward to prevent air from entering the brake pipeline.

●After disassembly, make sure that all parts are installed correctly.

●Appropriate amount of grease should be applied when installing the bearing.

1. Disassemble parts ahead of time

Refer to "Replace the front wheel", "Replace the front shock absorber", "Replace the steering handle", and remove the front wheel, front shock absorber, and direction handle.

2. Remove the faucet lock

a. Insert the 10 # box wrench from the notch at the storage box, and remove two M6× 20 bolts (1) screws on the main lock support, take down the main lock and main lock support, do not need to remove the main lock and main lock, and put them in a proper position nearby.

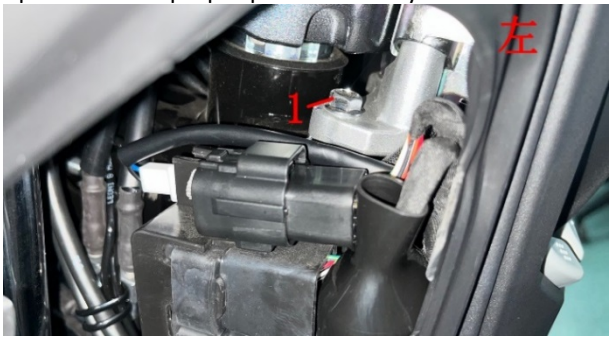



3. Removing the direction pad

D350/D250/D368

a.Refer to“Removing the cover”to remove the head cover,as shown in the figure.

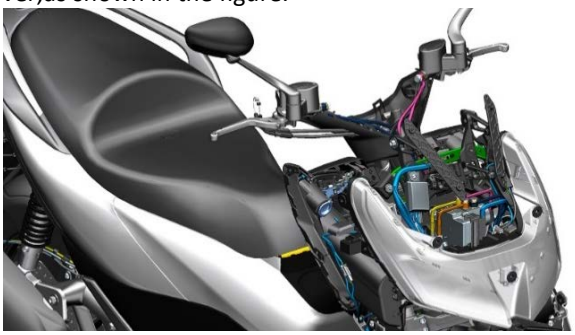

b. Untie the binding band, and then take out the handle switch harness and brake hose in the steering handle clamp from the notch of the steering handle clamp one by one until all harnesses in the steering handle clamp are removed.

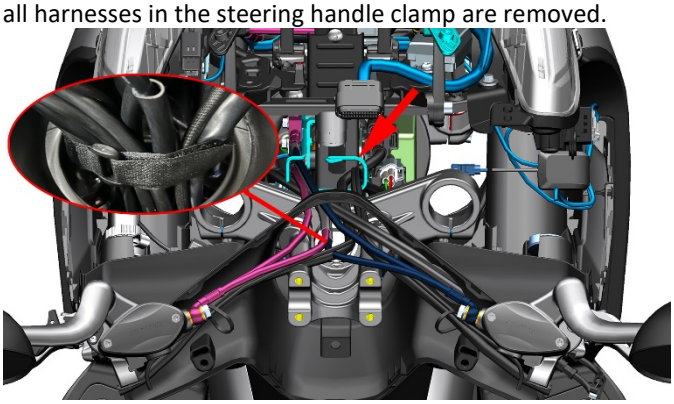

c. Use ratchet wrench+extension rod+30 # socket to remove the upper yoke cap nut (2), and remove the gasket (3), upper yoke and steering handle seat block.

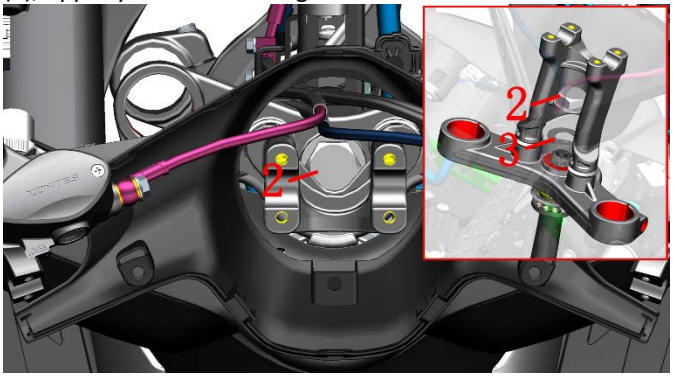

D125/D155

a.Refer to“Removing the cover”to remove the head cover,as shown in the figure.

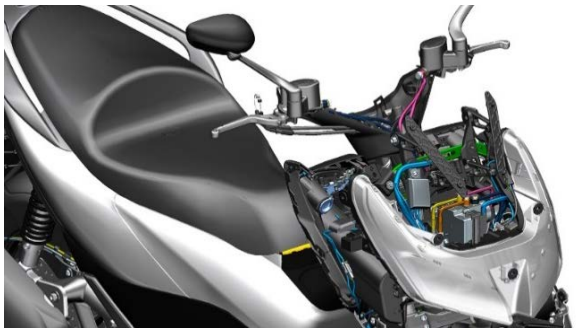

b.Take out the handle switch harness and brake hose in the direction wire clip from the direction of the wire clip gap one by one, until the direction is taken out all the wire harnesses in the wire clip, and then use the 4# inner hexagon to remove the M6×12 bolt that fixed direction wire, take out the direction of the wire clamp.

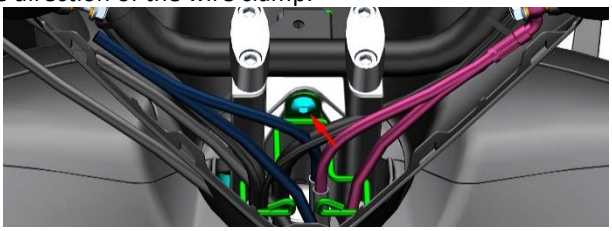

c. Use ratchet wrench+extension rod+30 # socket to remove the upper yoke cap nut (2),remove the direction put pad block.

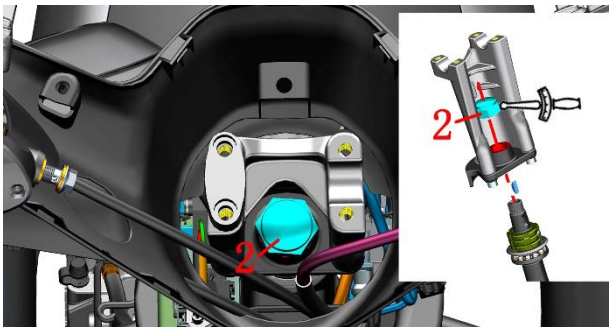

D125

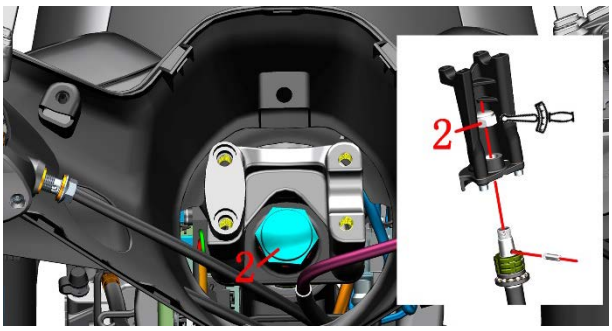

D125(2024)/D155

4. Remove the lower link board assembly

a. Use a four-jaw sleeve to remove the direction column adjustment nut on the uppermost layer of the lower link plate, take out the cassette washer, the middle direction column adjustment nut, and the adjustment nut rubber gasket. Then use a four-jaw sleeve to remove the lowermost direction column adjusting nut. Refer to the exploded view of the lower link board.

b. One person supports the lower link plate with his hand, and one person knocks the lower link plate with a rubber hammer and a suitable tool, and finally removes the lower link plate from the frame.

5. Install the lower link board assembly D350/D250/D368

a. Apply proper amount of lubricant to the new lower link assembly and install it from under the frame.

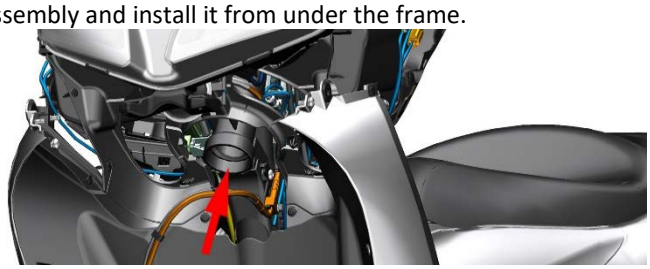

b. Put the bearing (9), shaft ring (8) and dust cover (7) smeared with grease on the lower yoke plate in turn, screw in one adjusting nut (5) of the steering column, and tighten the adjusting nut (5) of the steering column with a four jaw socket with a torque of 50N. m (5.1 kgf. m, 37 lbf. ft). After ensuring that the upper yoke plate does not move up and down in tandem, loosen the adjusting nut (5) of the steering column by 1/4 turn counterclockwise, and finally tighten it with a torque wrench. Torque: 15N. m (1.2 kgf. m, 11 lbf. ft). Put rubber gasket (6) on the adjusting nut of steering column; Then screw in the second steering column adjusting nut (5), screw the second steering column adjusting nut (5) to align with the gap of the first steering column adjusting nut (5), and finally put in the snap washer (4).

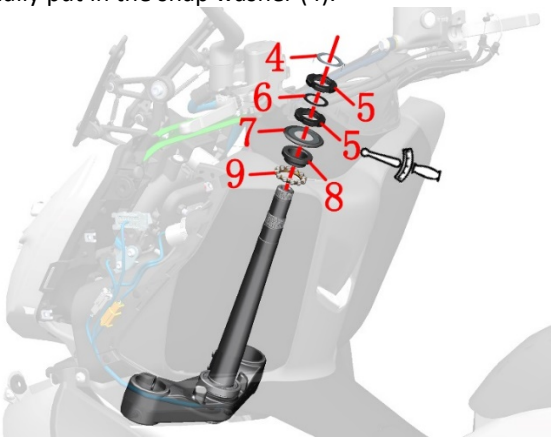

c. Install the steering handle seat block and lower yoke plate, put in the gasket (3), and finally screw in the cap nut (2) with a torque of 100N. m (10.2 kgf. m, 74 bf. ft)

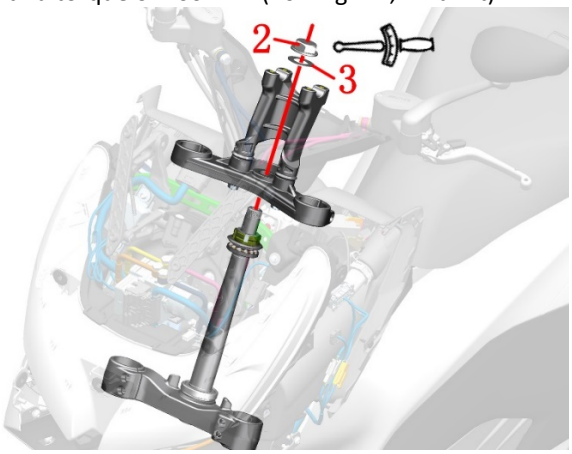

D125/D155

a. Apply proper amount of lubricant to the new lower link assembly and install it from under the frame.

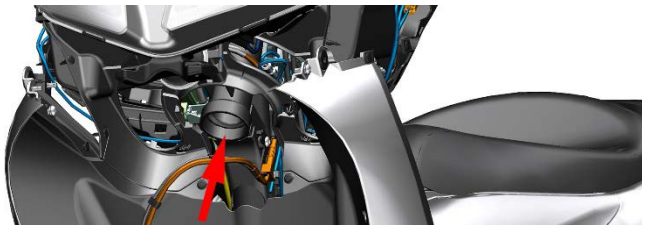

b. Put the bearing (9), shaft ring (8) and dust cover (7) smeared with grease on the lower yoke plate in turn, screw in one adjusting nut (5) of the steering column,and tighten the adjusting nut (5) of the steering column with a four jaw socket with a torque of D125:15N. m (1.5 kgf. m, 11 lbf. ft),D125(2024)/D155:13N. m (1.3 kgf. m, 10 lbf. ft). Put rubber gasket (6) on the adjusting nut of steering column; Then screw in the second steering column adjusting nut (5), screw the second steering column adjusting nut (5) to align with the gap of the first steering column adjusting nut (5), and finally put in the snap washer (4). screw in one adjusting nut (5) of the steering column, and tighten the adjusting nut (5) of the steering column with a four jaw socket with a torque of D125:100N. m (10.2 kgf. m, 74 lbf. ft),D125(2024)/D155:80N. m (8.2 kgf. m, 59 lbf. ft).

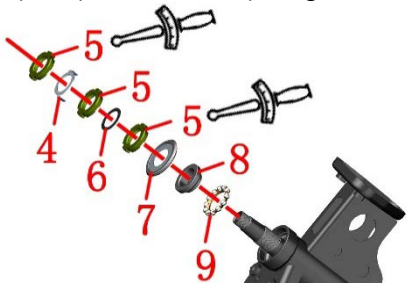

c. Install the semi-circular key in the groove of the lower link plate, then align the gap between the spacer and the base with the semi-circular key, and finally screw in the cap nut, torque: 100N.m (10.2 kgf.m, 74 bf.ft)



D125



D125(2024)/D155

6. Install other disassembly components

a. Refer to "Replace the front shock absorber" to replace the front shock absorber.

b. Refer to "Replace the front wheel" to reinstall the front wheel assembly.

c. Refer to "Replace the direction handle" to install the assembly back in the direction.

d. Install the head cover back according to Disassembly of Covers

DANGER

●The vehicle must be parked on a level and stable ground or on a lifting platform

11.Disassemble the engine of the vehicle

Caution:

●The vehicle must be parked on a level and stable ground or on a lifting platform.

●The operation can only be performed after the engine has cooled down completely.

●Do not press the brake handle after removing the rear brake caliper.

●Attention and sequence when removing the plastic buckle to avoid the buckle from breaking

●Wear waterproof gloves when draining coolant to prevent it from getting on your skin.

●The storage box of subsequent production models has been changed. For disassembly and assembly, please refer to the chapter "Disassembly of the storage box" in "Disassembly of Vehicle Covers".

1. Disassemble the storage box

a. Push the whole car to a wide, flat place, lay down the main bracket, and unlock the cushion lock.



b. Use the 4 # hexagonal socket to remove the 2 M6× 16 beside the battery, take out the battery negative electrode rubber sleeve at the arrow, use a cross screwdriver to remove the battery negative electrode, and then take out the battery positive electrode rubber sleeve, use a cross screwdriver to remove the battery positive electrode, take out the battery positive electrode wire, and then use a cross screwdriver to screw back the bolts on the battery.

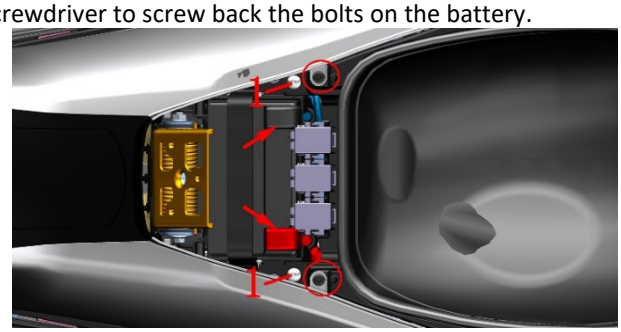

c. Take out all the fuse boxes beside the battery



d. Take out the decorative buckle (2) on the bolt, and use the 4 # hexagonal socket to remove the two M6 × 16 bolts (1) fixing the storage box。



e. Lift the glove box slightly until the ambient light connector is exposed on the left side of the glove box, unplug the connector and take out the entire glove box.



2. Remove the cover

a. Remove the bolt decorative buckle (2) on the bolt, and use the 4 # hexagonal socket to remove 6 M6 × 12 bolts (1); Use 12 # socket to remove 5 M8 × 25 bolts (4); Remove one M6 at the connection between the middle of the tail skirt and the rear armrest with the 4 # hexagonal socket × 14 Shoulder bolt (3); Grasp any part of the rear armrest with both hands, lift the rear armrest up in the direction of the arrow, and then remove the rear armrest.

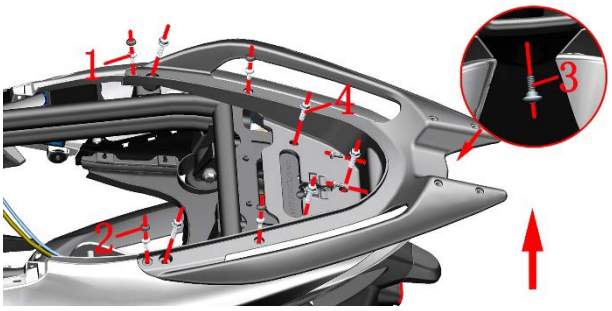

b. Put down the rear right foot pedal, and use the 4 # hexagonal socket to remove the right cover to connect one M6 × 14 of the rear right foot pedal bracket. Shoulder bolt (3) and 1 expansion nail,; Grasp the mark of the left cover (green rectangle) with your hand, and pull it out alternately from the outside to the inside in the direction of the small arrow until all five mushroom buttons (red circle) on the left cover are pulled out, and then remove the left cover.

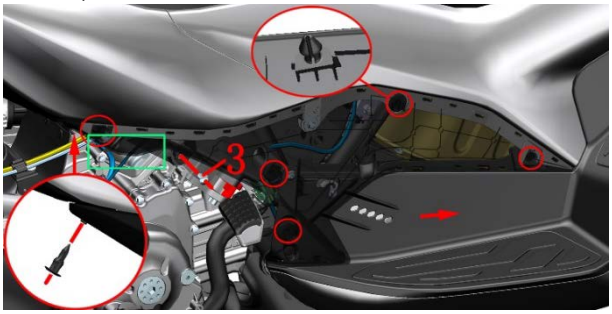

c. Remove the left cover in the same way.

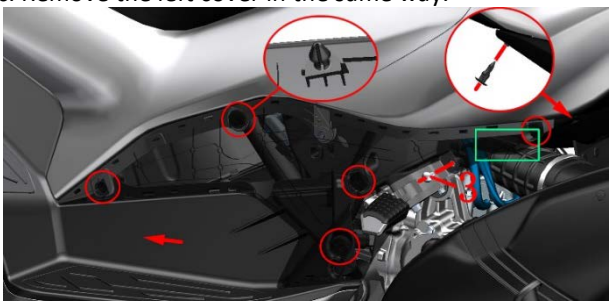

d. Remove two expansion nails and two bolts (5) at the connection between the left and right part of the fuel tank cover plate and the tail group respectively with 4 # socket head and 8 # sleeve, and remove the bushing (6) and buffer rubber (7).

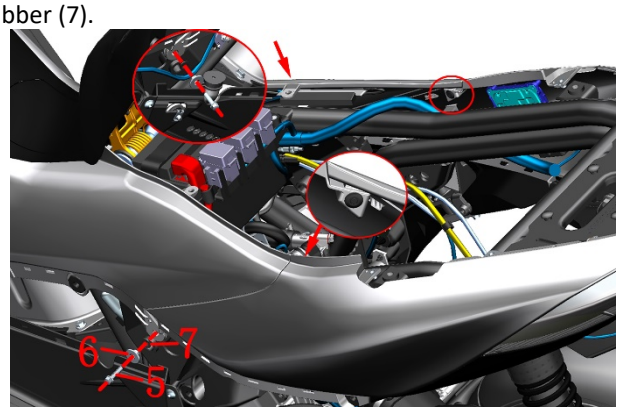

e. Remove the 3 expansion pins connecting the left and middle of the tail skirt using a 4# inner hexagon.



f.Remove the 3 expansion pins connecting the right and middle of the tail skirt using a 4# inner hexagon.

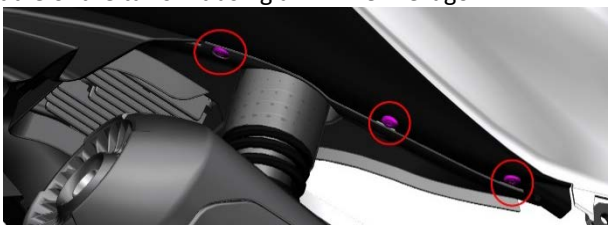

g. Grasp both sides of the tail skirt and pull out the left and right tail skirts together with the left and right tail lamps and the middle of the tail skirt in the direction of the arrow. Note: Pull out carefully to avoid scratching the cover and tail lamp.

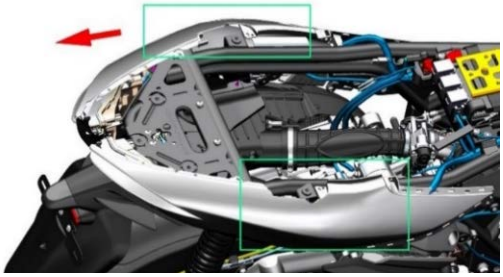

h. Remove the left pedal by referring to”Removing the Spark plig.

i. Remove the right paedal and surround the right part in the same way.



j. Grasp the mark (green rectangle) of the surrounding base plate with your hand and pull it back in the direction of the arrow until you take out the surrounding base plate.

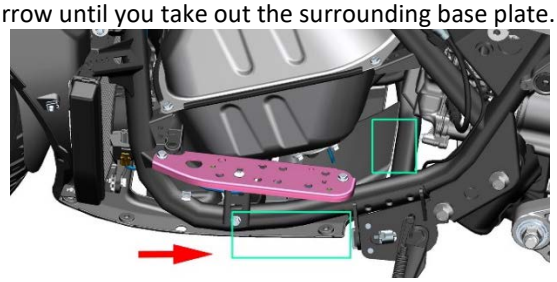

3. Put the coolant and pull out the D368/D350

a. Place appropriate utensils under the big arrow, wear waterproof gloves,and then use 10 # socket to attach M6 × 12 Drain bolt and ϕ five point six ×ϕ Remove the O-ring of 1 and drain the coolant; Use water hoop pliers to remove the green hoop pointed by the small arrow, pull out the water pipe of the water tank,open the water filler coyer, and drain the coolant.



D350/D250

b. Unplug the high-voltage package plug on the engine head.

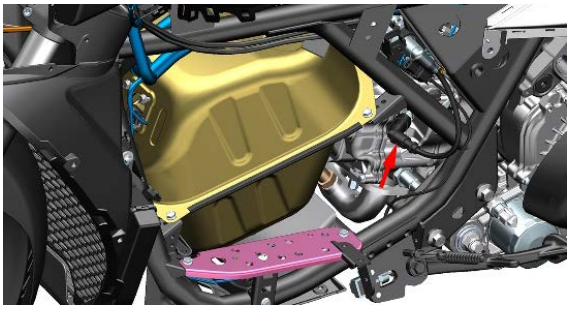

D350/D250

c. Remove the plugs of the stepper motor ① and sensor ② on the throttle valve body according to the steps in Removing the Throttle Valve Body Assembly to Clean the Motorcyclebon Deposits.



d. Locate and unplug the plugs of the high-pressure fuel pipe③ and the fuel injector④ at the front end of the throttle valve.

Caution: A small amount of fuel will flow out when the high-pressure oil pipe is pulled out, and it is forbidden to drip onto the surface of the part.

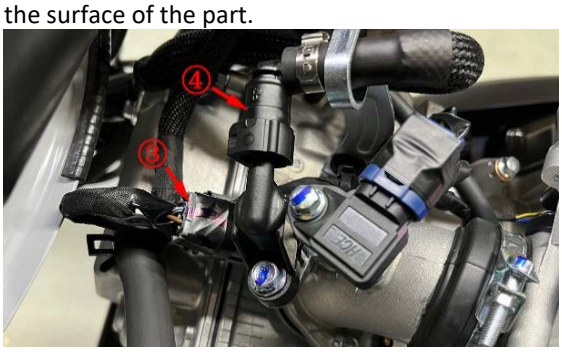

e. Find and pull off the crankshaft position sensor plug ⑤ at the right inner side of the frame, and find and pull off the oxygen sensor plug ⑥ under the right foot bracket

Caution: One end of the crankshaft position sensor is connected to the inside of the engine, one end is connected to the main cable; one end of the oxygen sensor is connected to the engine in front of the muffler, and the other end is connected to the main cable; do not unplug the wrong plug.

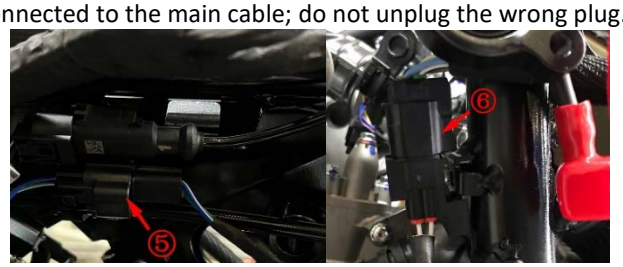

f. Locate and pull out the plug of the magneto stator charging cable⑦ at the left frame.

Caution: One end of the magneto stator charging cable is connected to the inside of the engine, and one end is connected to the connector on the rectifier; do not pull out the wrong plug.



g. Use an 8# sleeve to remove a bolt on the starter motor, and take out the negative wire⑧ on the bolt.

Caution: The negative wire of the early production model is fixed on the bolt around the starter motor.



h. Use an 8# sleeve to remove a bolt on the starter motor, and take out the positive wire⑨ on the bolt.



i. Locate and unplug the plug of the cylinder head water temperature sensor⑩ on the right side of the throttle valve body.

Caution: The water temperature sensor of the cylinder head is directly connected to the engine, do not pull out the wrong way.

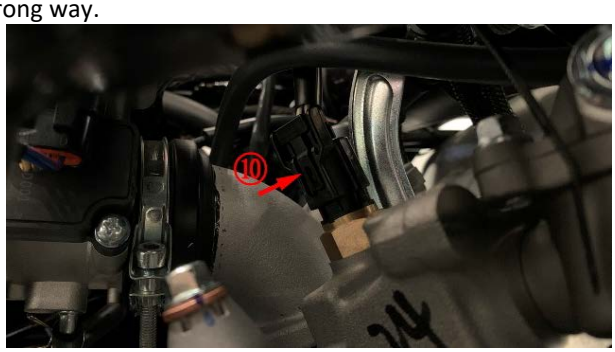

j. Locate and unplug the tube connecting the throttle body to the carbon canister at the lower part of the throttle body.



k. Remove one M6 fixing the wheel speed sensor on the rear rocker arm with the 4 # hexagonal socket × Take out the wheel speed sensor and take it out of the fixed clamp. Then use 14 # sleeve to remove 2 M8× 37 fixed brake calipers bolt (2), pass the brake caliper and wheel speed sensor through the shock absorber in the direction of arrow.

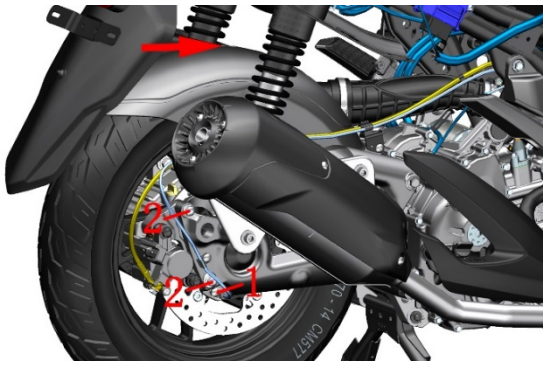

D155

a.Place a suitable vessel below the big arrow, wear waterproof gloves, and remove the M6 × 12 drain bolt and Φ5.6 × Φ1 O ring with 10 # sleeve.Discharge the cooling liquid;Use the water clamp pliers to remove the green hoop indicated by the small arrow, pull out the water pipe of the water tank, open the water filler cover, and discharge the coolant.

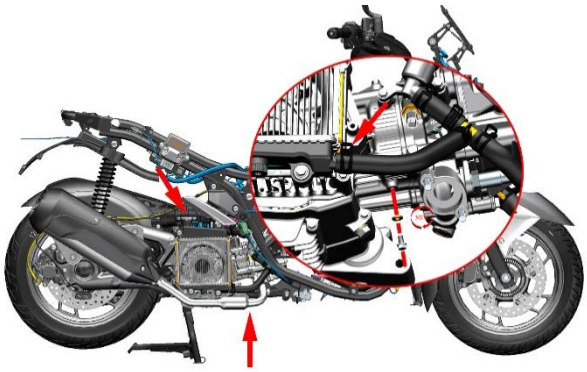

b. Pull out the plug of high voltage package on the engine head.

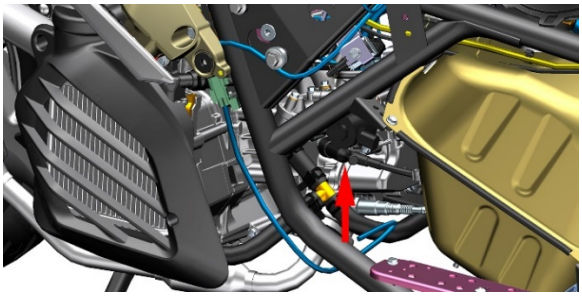

c.Unplug the sensor ① and the stepper motor ② on the throttle valve body according to the steps in Dismantling the throttle valve body assembly to remove the carbon deposit。

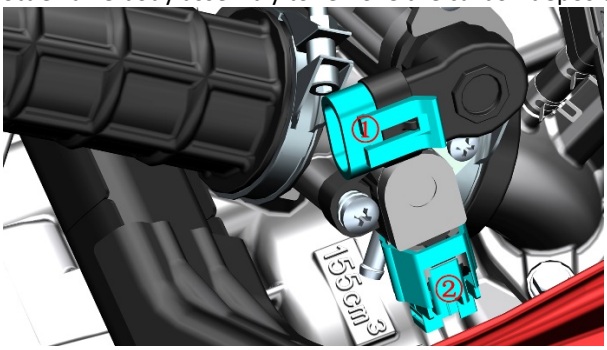

d. Find and unplug the plugs of high-pressure oil pipe ④ and fuel injector ③ at the front end of the throttle valve.

Note: a small amount of fuel will flow out when the high-pressure fuel pipe is pulled out, and it is forbidden to drop on the surface of the parts.

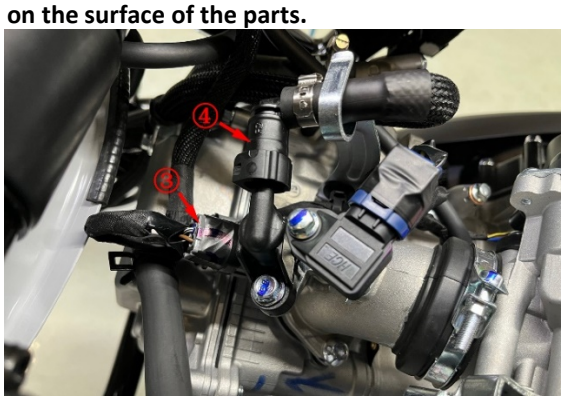

e.Locate and unplug the crankshaft position sensor plug ⑤, the magneto stator charging cable ⑥, and the water temperature sensor ⑦ in front of the tank on the right side of the frame.

Note: one end of the crankshaft position sensor is connected to the inside of the engine, and the other end is connected to the main cable;One end of the magneto stator charging cable is connected to the inside of the engine, and the other end is connected to the connector on the rectifier; do not pull out the wrong plug.The cylinder head water temperature sensor is directly connected to the engine. Do not pull it out by mistake.

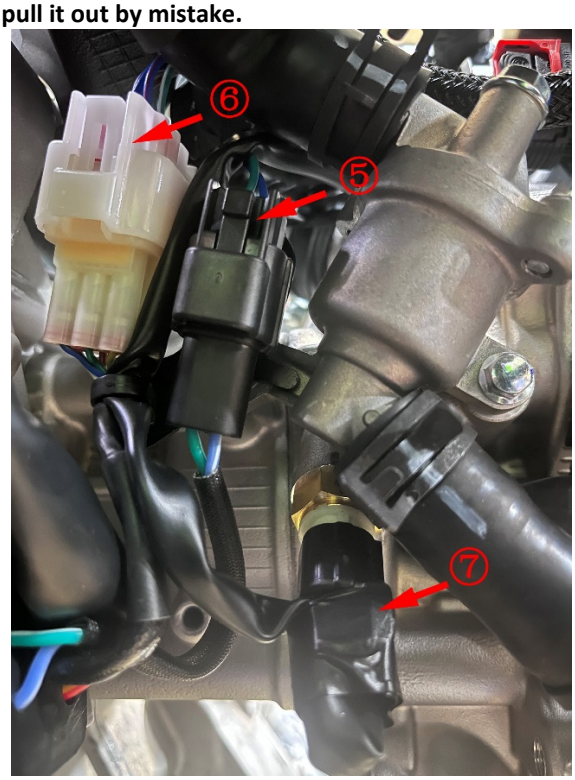

f. Find and unplug the oxygen sensor plug ⑧ at the throttle valve body.

Note: One end of the oxygen sensor is connected to the engine in front of the muffler, and the other end is connected to the main cable; do not pull out the wrong plug.

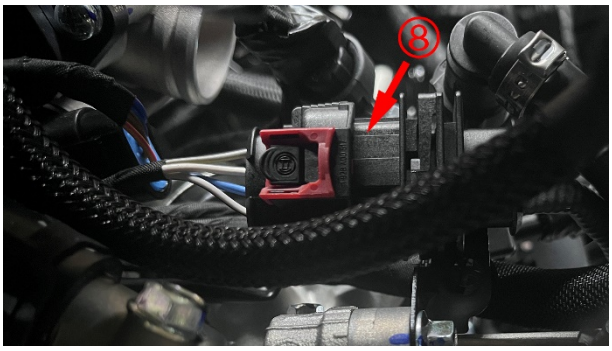

g. Locate and unplug the tube connecting the throttle valve body to the canister from the lower part of the throttle valve body.



h. Remove one M6 × 12 bolt (1) fixing the wheel speed sensor on the rear rocker arm with 4 # hexagon socket.Take out the wheel speed sensor and take it out of the fixing clamp. Then use 14 # sleeve to remove the two M8 × 37 bolts (2) fixing the brake caliper.Pass the brake caliper and wheel speed sensor through the middle of the shock absorber in the direction of the arrow.

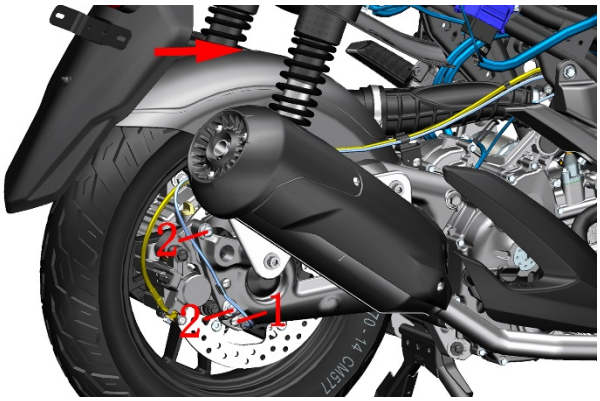

4. Disassemble the engine

D368/D350

a. Remove the muffler according to "Removing the muffler".

b. One person uses the 21 # sleeve to extend into the front of the fine filter to fix one nut (2) on the left side of the motorcycle to fix the engine, and the other person uses the 24 # sleeve to remove one bolt (1) on the right side of the motorcycle to fix the engine and draw the bolt out of the frame.

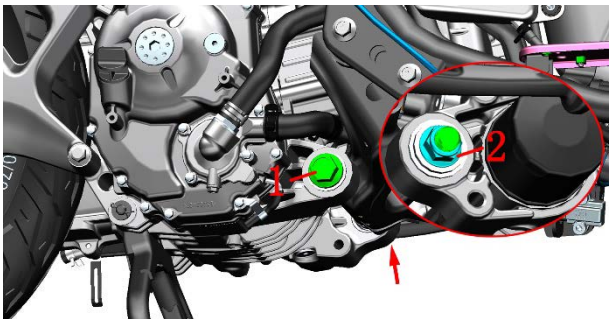

c. One person uses 14 # socket to insert and fix one nut (4) above the left rear shock absorber, and one person uses 14 # socket+ratchet wrench to remove one bolt (3) fixing the left rear shock absorber from the frame and pull out the bolt (3). Use the same method to remove one nut (4) that secures the right rear shock absorber. One person holds the frame and the other person uses a rubber hammer+a suitable tool to knock out one bolt (3) that secures the right rear shock absorber. Torque standard of nut (3): 30N. m (3.1 kgf. m, 22 lbf. ft)



d. The two people hold the left and right handlebars and frames respectively, push the whole motorcycle forward, push it to a flat and wide place, pull down the side bracket, and use a rubber stool with a suitable height to pad the mounting point of the rear pedal bracket on the right side of the motorcycle to keep the motorcycle balanced.

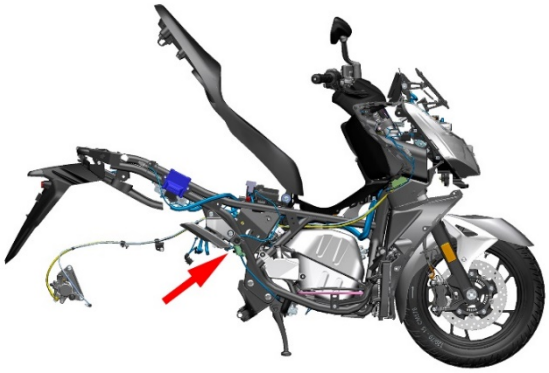

D125/D155

a. Remove the muffler according to "Removing the muffler".

b. One person uses a 17# ratchet wrench to reach into the nut(1) holding the engine on the right side of the vehicle from the rear of the tank, and another person uses a 15# sleeve to remove a bolt(2) holding the engine on the left side of the vehicle and pull out the bolt from the engine.

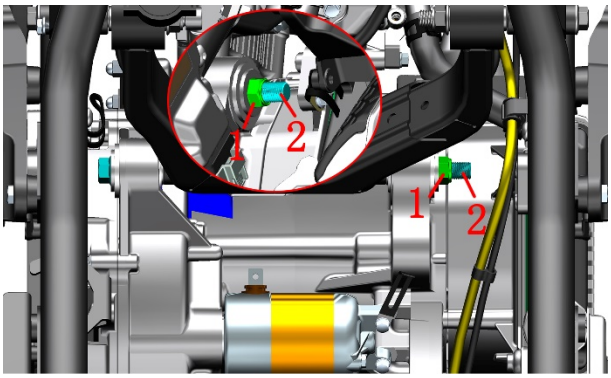

c. One person uses 14# ratchet wrench to extend from under the tail skirt and fix the 1 M10×1.5×55 bolt on the top of the left rear shock absorber, and one person uses 14# socket + ratchet wrench to remove and fix the left side from the frame. One M10 nut for rear shock absorption, and a bolt of M10×1.5×55 is drawn out. Use the same method to remove the 1 M10 nut that fixes the right rear shock absorber, one person holds the frame, and the other uses a rubber hammer + suitable tools to knock out one M10×1.5×55 bolt that fixes the right rear shock absorber.

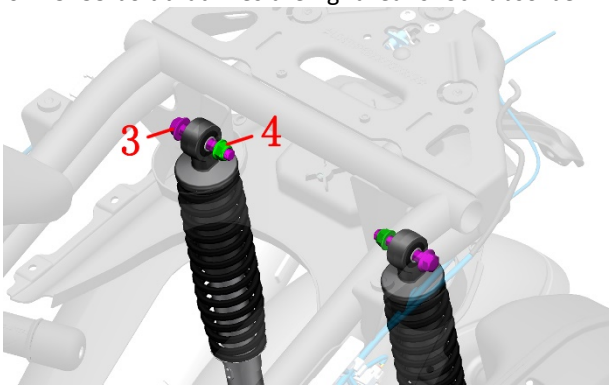

d. Two people hold the left and right handlebars and the frame respectively, push the whole car forward, push it to a flat and wide place, lay down the side brackets, and use a rubber stool with a suitable height to support the right side of the vehicle. Keep the vehicle balanced.

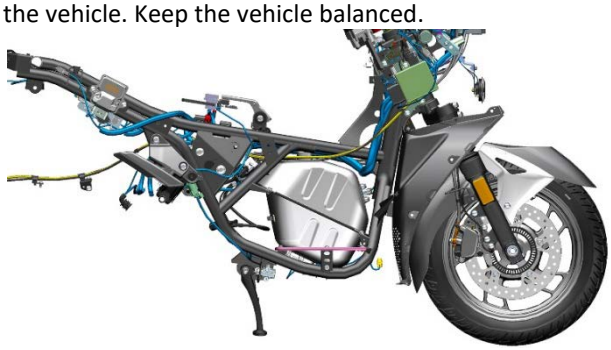

D250

a. Use a 12# sleeve to remove the two M8×25 bolts that fix the right pedal bracket, and remove the rear right pedal assembly.

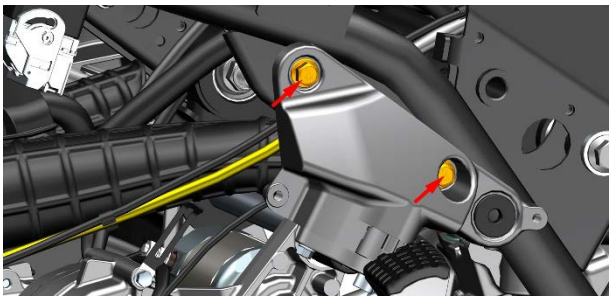

b. One person uses a 17# torx wrench to insert a M12 nut that fixes the engine on the left side of the vehicle from the front of the air filter, and another person uses a 15# sleeve to remove a M12×1.25×290 bolt that fixes the engine on the right side of the vehicle, pull out the bolt from the frame.

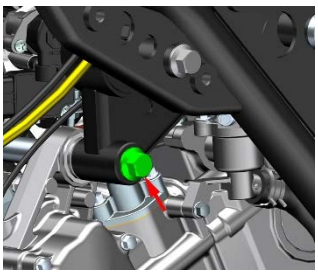

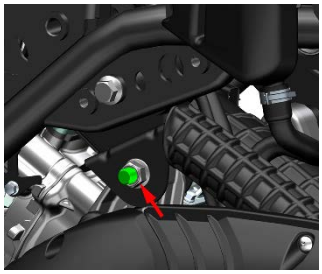

c. One person uses 14# torx wrench to extend from under the tail skirt and fix the 1 M10×1.5×55 bolt on the top of the left rear shock absorber, and one person uses 14# socket + ratchet wrench to remove and fix the left side from the frame. One M10 nut for rear shock absorption, and a bolt of M10×1.5×55 is drawn out. Use the same method to remove the 1 M10 nut that fixes the right rear shock absorber, one person holds the frame, and the other uses a rubber hammer + suitable tools to knock out one M10×1.5×55 bolt that fixes the right rear shock absorber.



d. Two people hold the left and right handlebars and the frame respectively, push the whole car forward, push it to a flat and wide place, lay down the side brackets, and use a rubber stool with a suitable height to support the right side of the vehicle. Keep the vehicle balanced.

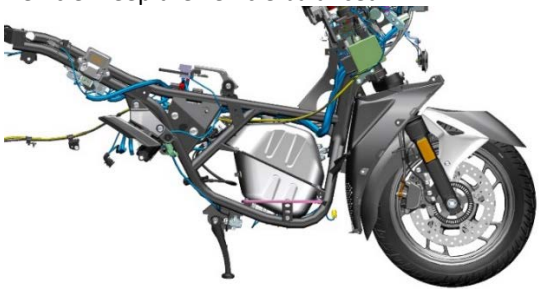

5. Install the engine

D368/D350

a. Two people cooperate to push the whole car to a suitable position, and first place the rear brake caliper on the whole car on the disc brake disc, being careful not to knock the shock absorber. Another person holds the vehicle, and one person adjusts the cradle mounting hole on the vehicle frame to align with the engine mounting hole. After aligning, use a suitable tool to penetrate a M16×1.5×240 bolt.

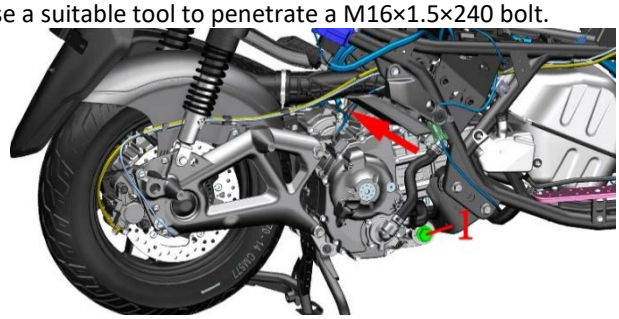

b. One person holds the whole car and slightly lifts the rear part of the frame, and one person rotates the two rear shock absorbers to the frame installation groove, and then rotates the right shock absorber until it is aligned with the frame installation hole. Pass one M10×1.5×66 bolt, use one M10 nut on the left side to tighten, torque: 30N.m (3.1 kgf.m, 22 lbf.ft). When installing the left side shock absorber, you need to slightly shake the frame from side to side until the shock absorber installation hole is aligned with the frame installation point, and then use the same method to fix the left side shock absorber.

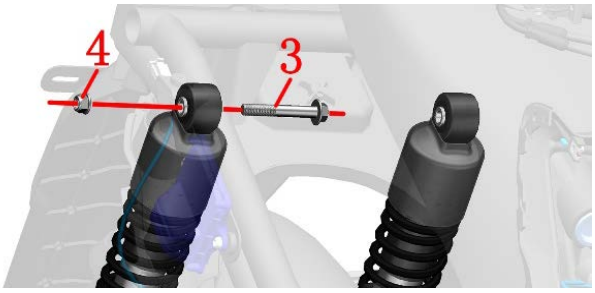

c. open the brake pads on the rear brake caliper with a flat-blade or other suitable tool, then install the brake caliper on the rear rocker arm, and then install 2 M8×37 bolts(6), use 14# set Tighten the barrel, torque: 24N.m (2.4 kgf.m, 18 lbf.ft); then connect the wheel speed sensor plug back to the corresponding position, install a M6×12 bolt(5), use 4# inner hexagon to tighten ; Finally, install all the pipes connecting the brake calipers and the wheel speed sensor into the corresponding clamps, and arrange the lines.

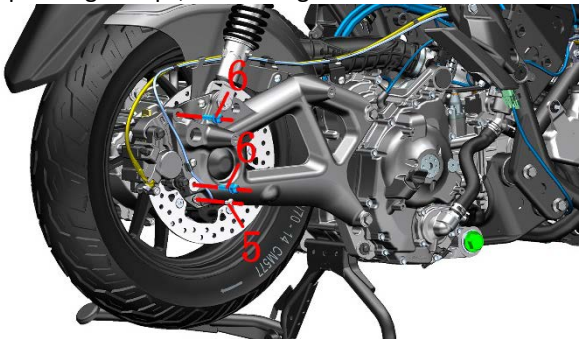

d. One person uses 21 # socket to extend into the front of the fine filter to fix one nut (2) on the left side of the motorcycle to fix the engine, and the other person uses 24 # socket to replace one bolt (1) on the right side of the motorcycle to fix the engine

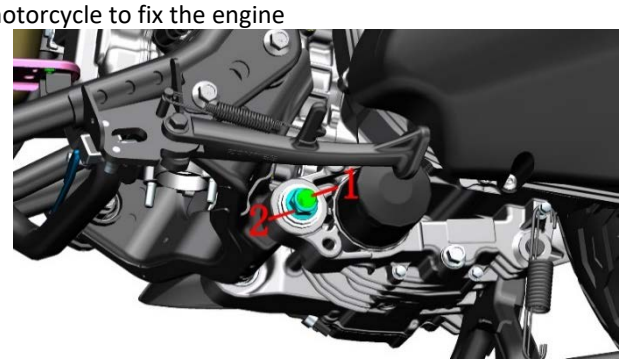

e. Install the muffler back according to "Removing the muffler"

f. Refer to Adding Coolant to the Main Water Tank and add proper amount of coolant

D125/D155

a. Two people cooperate to push the whole car to a suitable position, and first place the rear brake caliper on the whole car on the disc brake disc, being careful not to knock the shock absorber. Another person holds the vehicle, and one person adjusts the cradle mounting hole on the vehicle frame to align with the engine mounting hole. After aligning, use a suitable tool to penetrate a M12×1.25×290 bolt.

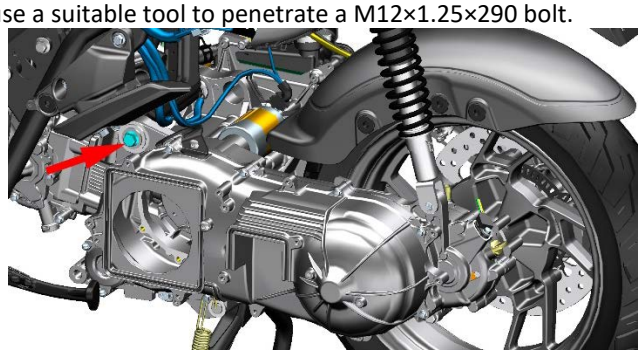

b. One person holds the whole car and slightly lifts the rear part of the frame, and one person rotates the two rear shock absorbers to the frame installation groove, and then rotates the right shock absorber until it is aligned with the frame installation hole. Pass one M10×1.5×55 bolt, use one M10 nut on the left side to tighten, torque: 30N.m (3.1 kgf.m, 22 lbf.ft). When installing the left side shock absorber, you need to slightly shake the frame from side to side until the shock absorber installation hole is aligned with the frame installation point, and then use the same method to fix the left side shock absorber.

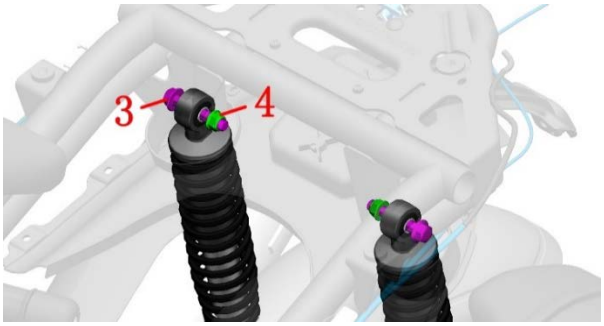

c. open the brake pads on the rear brake caliper with a flat-blade or other suitable tool, then install the brake caliper on the rear rocker arm, and then install 2 M8×37 bolts(6), use 14# set Tighten the barrel, torque: 24N.m (2.4 kgf.m, 18 lbf.ft); then connect the wheel speed sensor plug back to the corresponding position, install a M6×12 bolt(5), use 4# inner hexagon to tighten ; Finally, install all the pipes connecting the brake calipers and the wheel speed sensor into the corresponding clamps, and arrange the lines.

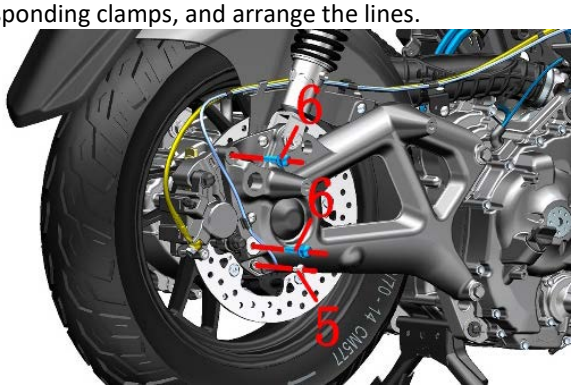

d. Insert the high-voltage package at the front of the engine back, and install one M12 nut back on the cradle to fix the engine, use 17# torx wrench to fix M12 nut, another person uses 15# socket to tighten bolt, torque: 65N.m (6.5 kgf.m, 48 lbf.ft).

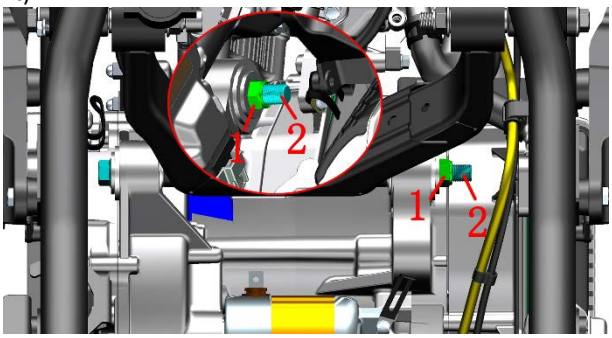

e. Install the muffler back according to "Removing the muffler"

f. Refer to Adding Coolant to the Main Water Tank and add proper amount of coolant

D250

a. Two people cooperate to push the whole car to a suitable position, and first place the rear brake caliper on the whole car on the disc brake disc, being careful not to knock the shock absorber. Another person holds the vehicle, and one person adjusts the cradle mounting hole on the vehicle frame to align with the engine mounting hole. After aligning, use a suitable tool to penetrate a M12×1.5×290 bolt.

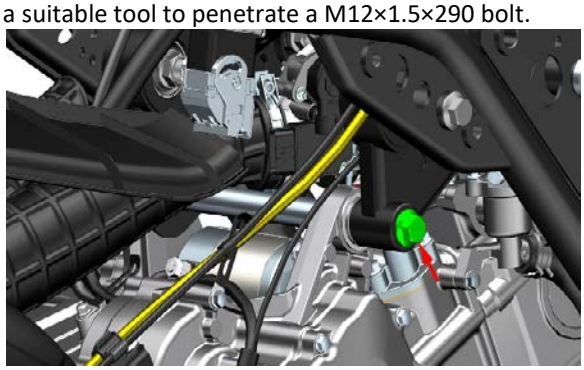

b. One person holds the whole car and slightly lifts the rear part of the frame, and one person rotates the two rear shock absorbers to the frame installation groove, and then rotates the right shock absorber until it is aligned with the frame installation hole. Pass one M10×1.5×55 bolt, use one M10 nut on the left side to tighten, torque: 30N.m (3.1 kgf.m, 22 lbf.ft). When installing the left side shock absorber, you need to slightly shake the frame from side to side until the shock absorber installation hole is aligned with the frame installation point, and then use the same method to fix the left side shock absorber.

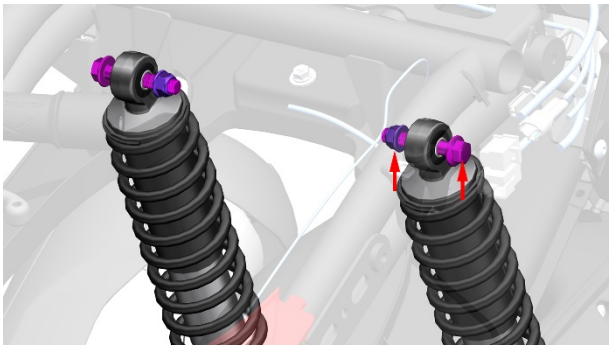

c. open the brake pads on the rear brake caliper with a flat-blade or other suitable tool, then install the brake caliper on the rear rocker arm, and then install 2 M8×37 bolts(6), use 14# set Tighten the barrel, torque: 24N.m (2.4 kgf.m, 18 lbf.ft); then connect the wheel speed sensor plug back to the corresponding position, install a M6×12 bolt(5), use 4# inner hexagon to tighten ; Finally, install all the pipes connecting the brake calipers and the wheel speed sensor into the corresponding clamps, and arrange the lines.

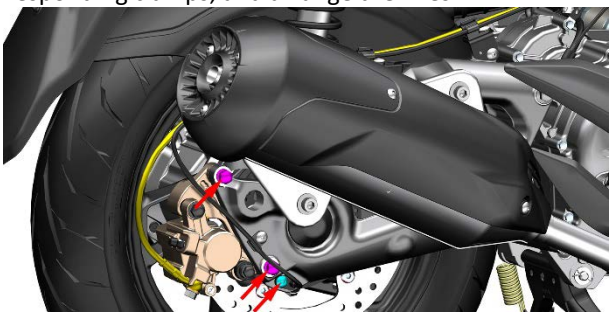

d. Insert the high-voltage package at the front of the engine back, and install one M12 nut back on the cradle to fix the engine, use 17# torx wrench to fix M12 nut, another person uses 15# socket to tighten bolt, torque: 65N.m (6.5 kgf.m, 48 lbf.ft).

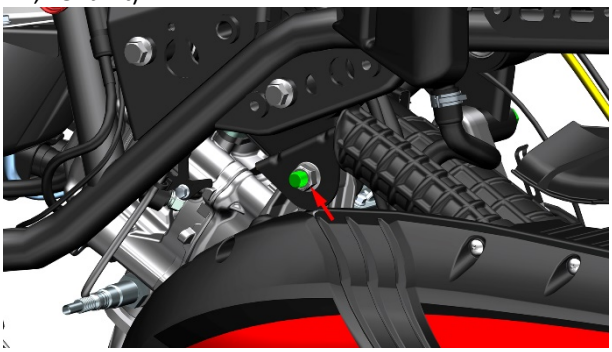

e. Install the rear pedal on the right side of the vehicle to a suitable position, install two M8×25 bolts, and tighten them with a 14# sleeve; connect the small water tank inlet pipe to the corresponding pipeline, and tighten it with a single batch Clamp; then connect the engine water inlet pipe back to the corresponding pipe, and use the water clamp clamp to fix the clamp to the appropriate position to prevent leakage of coolant.

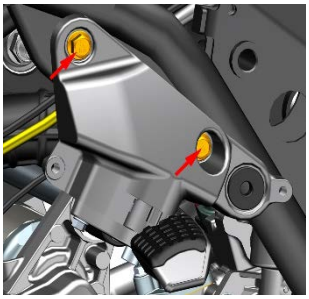

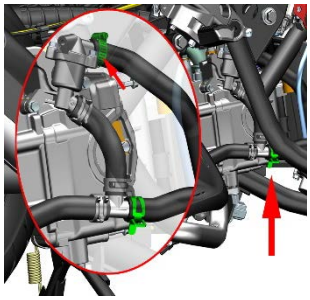

f. Reconnect the plugs of the stepper motor and the three-in-one sensor on the throttle valve body; reconnect the connectors of the high-pressure fuel pipe, fuel injector, oxygen sensor, crankshaft position sensor, magneto stator charging cable, and cylinder head water temperature sensor; Reconnect the negative and positive wires connected to the starter motor and tighten the bolts; install the two tubes that connect the carbon canister to the throttle valve body and the oil-air separator to the air filter.

g. Refer to "Adding Coolant to the Main Water Tank" to add an appropriate amount of coolant.

12. Disassembly and assembly of vehicle covering parts

Caution:

●The vehicle must be parked on a level and stable ground or on a lifting platform.

●The operation can only be performed after the engine and muffler has cooled down completely.

●Attention and sequence when removing the plastic buckle to avoid the buckle from breaking

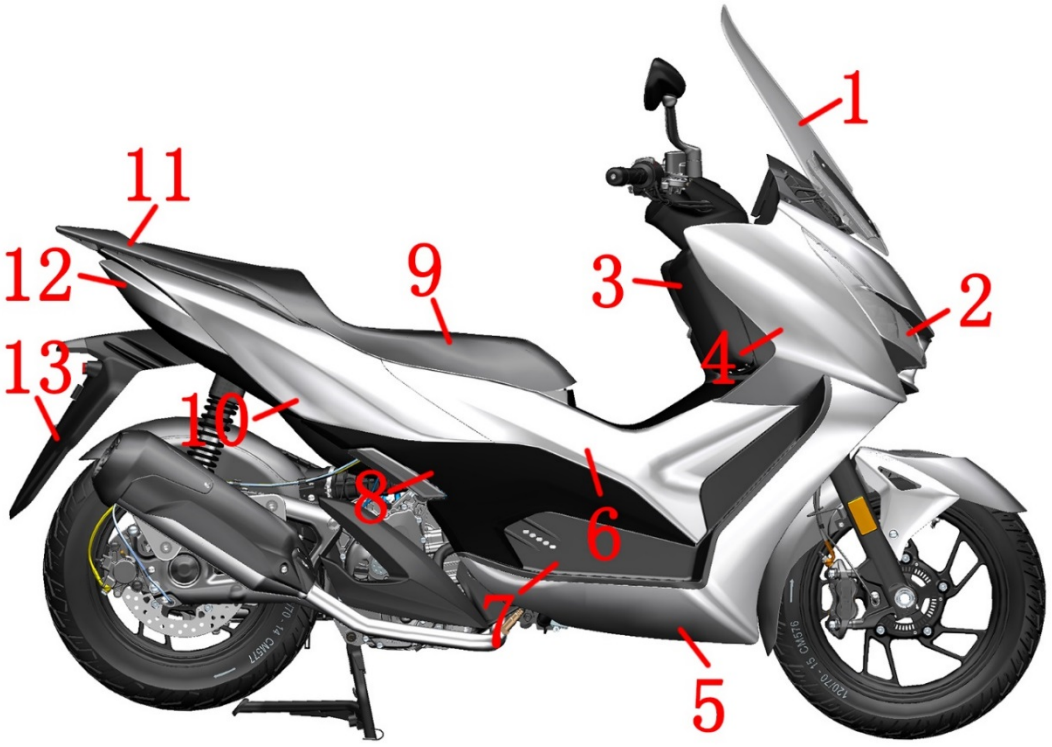

1.Windshield 2.Front headlight 3.Front right storage box 4.Front right panel 5. Srrounding the right 6. Fuel tank cover right part 7. Right pedal 8.Right side cover 9. Seat 10.Tail skirt right part 11.Rear armrest 12.Right rear rear light 13.Rear fender

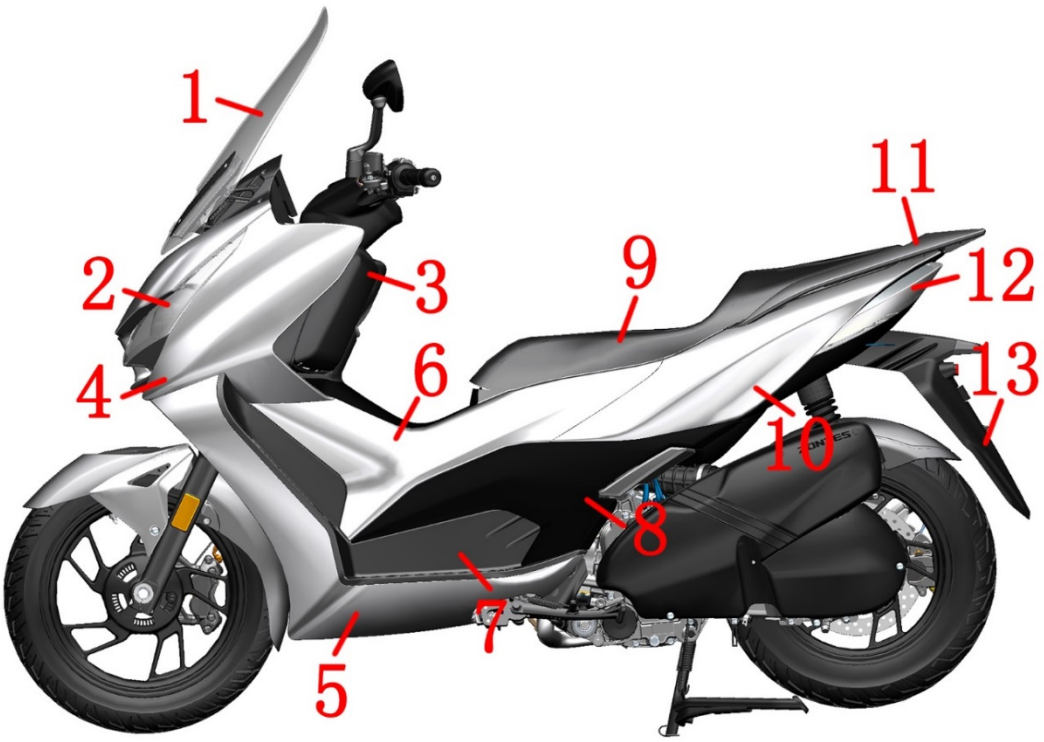

1.Windshield 2.Front headlight 3.Front left storage box 4.Front left panel 5. Srrounding the left 6. Fuel tank cover left part 7.Left pedal 8.Left side cover 9. Seat 10.Tail skirt left part 11.Rear armrest 12.Left rear rear light 13.Rear fender

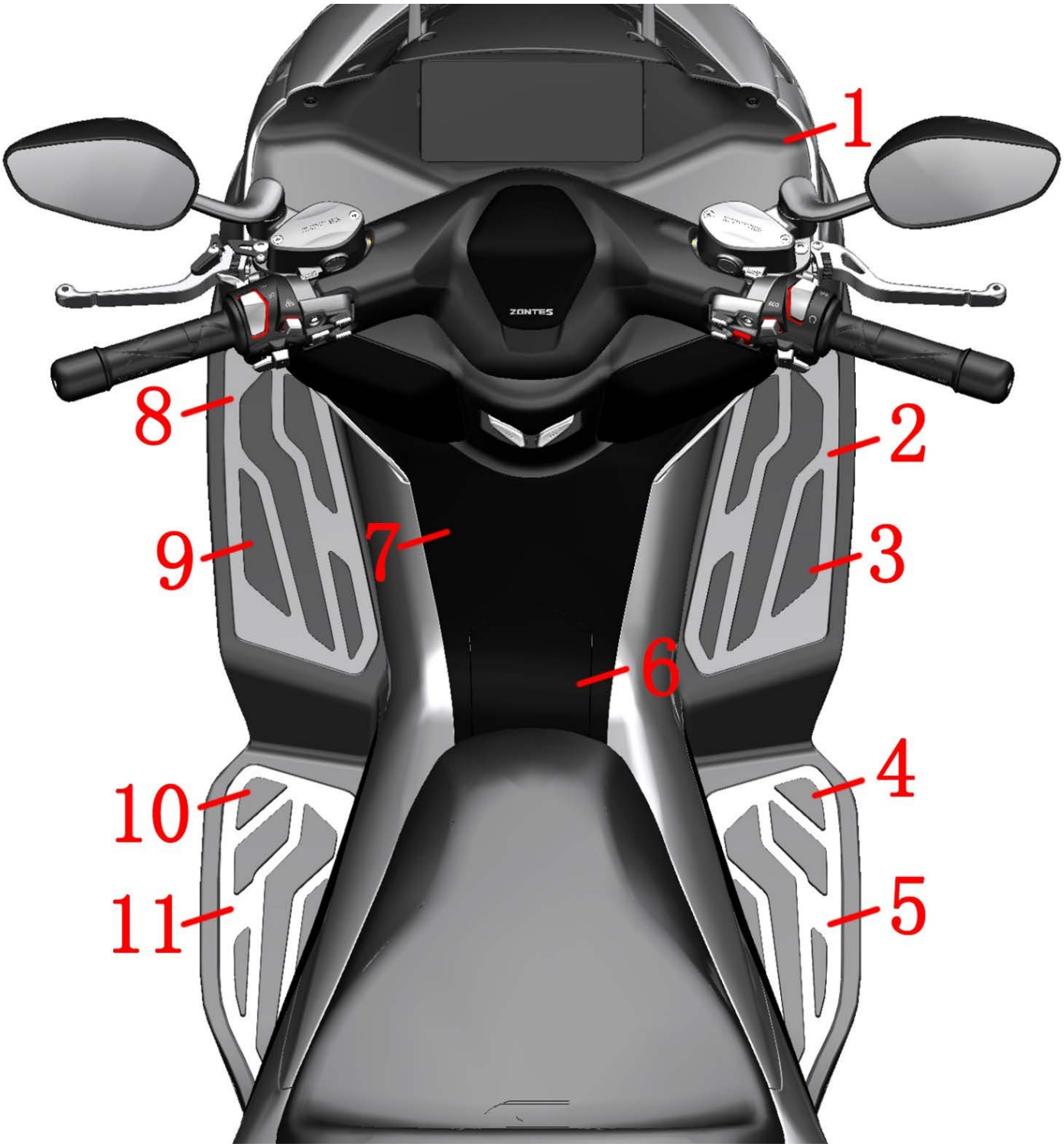

1.Instrument panel 2.Front right pedal pad pressure plate 3.Front right pedal pad 4.Rear right pedal pad 5.Rear right pedal pad presser 6.Fuel tank cover 7.Middle part of the fuel tank cover 8.Front left pedal pad pressure plate 9.Front left pedal rubber pad 10.Rear left pedal rubber pad 11.Rear left pedal pad presser

Disassembly and assembly of vehicle panel

Caution:

●During disassembly, please pay attention to the force to prevent breaking the buckle.

●When removing the panels, please remove them in strict order. Do not forcibly remove the panels to prevent irreparable damage to the corresponding panels.

●When unplugging the plug, please control the force and disassembly method. Do not forcibly unplug the plug to prevent damage to the plug, resulting in poor contact of harness connector and affecting the function of various parts.

●When installing the harness plug, please check whether the harness thimble in the harness male connector is deformed or misaligned, so as to prevent the harness thimble in the harness male connector from being damaged during the installation of the harness plug, thereby affecting the function of each part.

Windshield removal

a. Remove the 4 decorative buckles on the windshield.

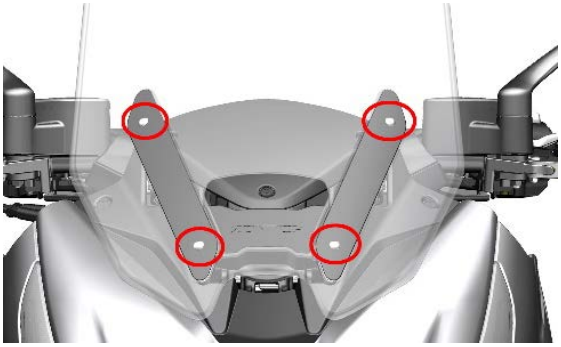

b. Use 4# inner hexagon to loosen the 4 M6×14 bolts on the left and right decorative covers of the windshield.

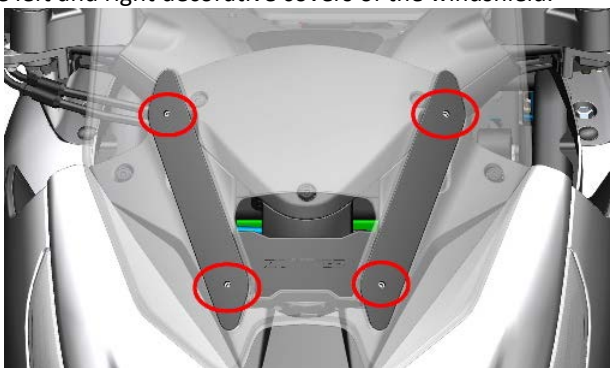

c. Take out the left and right decorative covers of the windshield, the windshield, and the rubber pads of the windshield bracket in turn.



Removal of the front sun visor

a. Use 4# inner hexagon to remove the 3 swell nails on the front sun visor.

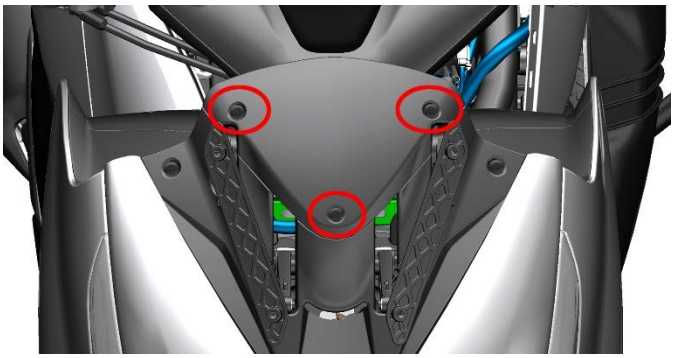

Removal of the front cover and the front panel

a. Use 4# inner hexagon to remove one M6×14 bolt on the front cover. Then use 4# inner hexagon to remove the 4 swell nails on both sides of the front cover.

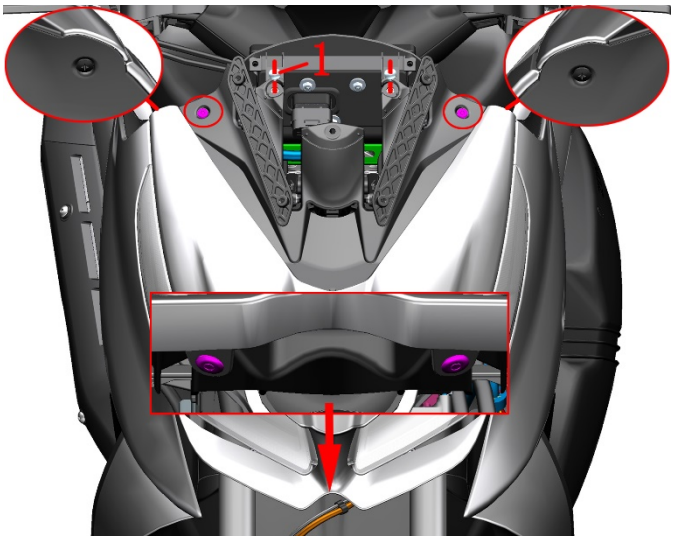

b. Raise the windshield rocker arm to the highest position, grasp the mark of the front cover plate (green rectangle) with your hand, and pull out in the direction of the small arrow; After pulling out the mushroom button (red circle) on one side of the front cover plate, grasp the mark of the front cover plate (blue rectangle) with your hand, pull out in the direction of the small arrow, and pull out the mushroom button (red circle) on the other side of the front cover plate until all three buttons on the front panel are pulled out. Remove the front panel together with the front cover.

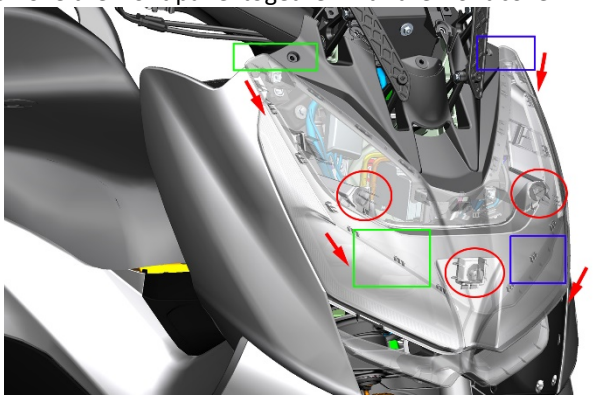

c. Remove 4 M6 × 14 from the front cover plate with 4 # socket head Shoulder bolt (1). Separate the front panel from the front cover.

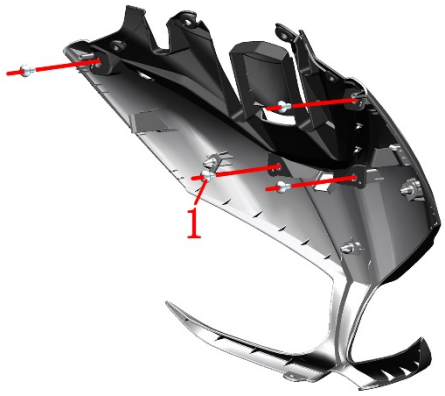

Disassembly of the left &right side cover

a. Put down the rear left foot rest, and use the 4 # hexagonal socket to remove the left cover to connect one M6 × 14 of the rear left foot rest bracket Shoulder bolt (1) and 1 expansion nail; Grasp the mark of the left cover (green rectangle) with your hand, and pull it out alternately from the outside to the inside in the direction of the small arrow until all five mushroom buttons (red circle) on the left cover are pulled out, and then remove the left cover.

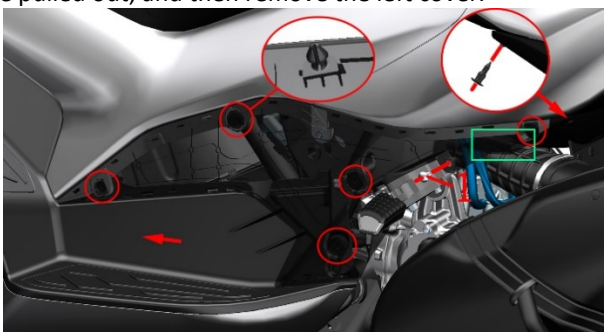

b. Remove the right side cover by the same method.

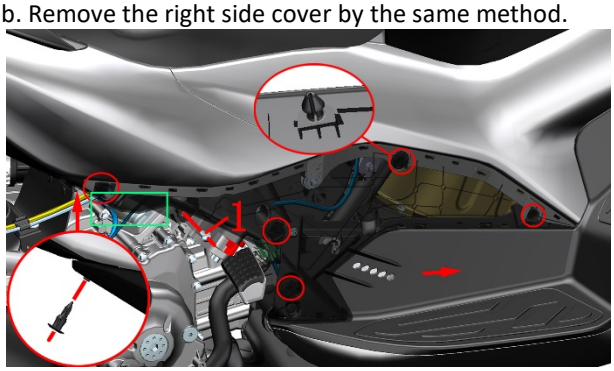

Disassembly of the cushion

a. First press the “ ” power button of the vehicle, then press the seat lock switch of the vehicle to open the seat lock, and then long press the power button for 2 seconds to shut down the vehicle



b. Hold the seat cushion with one hand, remove the 3 M6 nuts fixed on the seat cushion bracket by 10# double offset ring spanner or 10# sleeve , grasp the seat cushion with both hands and pull it out obliquely upward according to the angle of the stud (big arrow direction) cushion.

Caution: When the angle is incorrect and the cushion cannot be pulled out, do not use brute force to forcibly pull out the cushion to prevent damage to the threads on the cushion installation studs.



Disassembly of the storage box

a. Use a 4# hexagon socket to remove the 2 M6×16 bolts (1) that fix the front end of the storage box.Remove the 2 expansion nails on the storage box with a 4# inner hexagon.

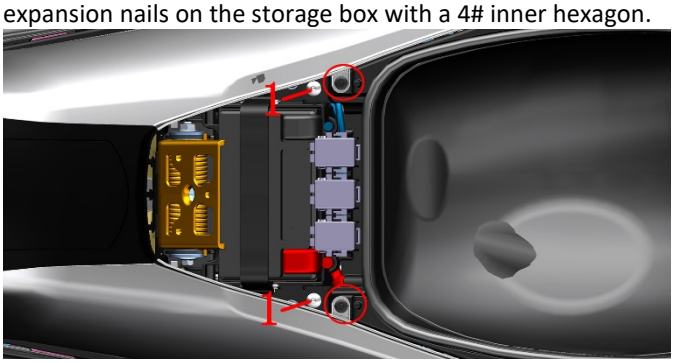

b. Remove 2 bolt decorative buckle (2), and then use 4# hexagon socket to remove 2 M6×16 bolts (1).

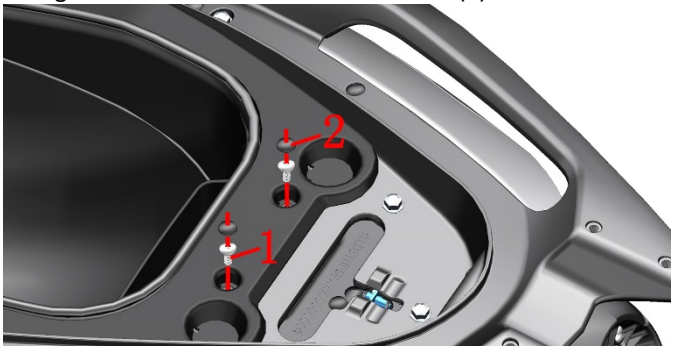

d. Lift the rear of the storage box slightly until the harness connector on the left side of the storage box is exposed, and unplug the atmosphere lamp plug on the left side of the storage box; Unplug the plug and take out the storage box completely.

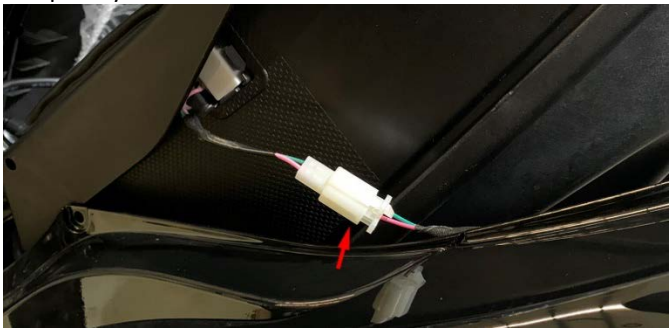

Disassembly of the left, right fuel tank cover

a. Remove 2 expansion nails connecting the fuel tank trim cover and the tail skirt with 4 # hexagonal socket.

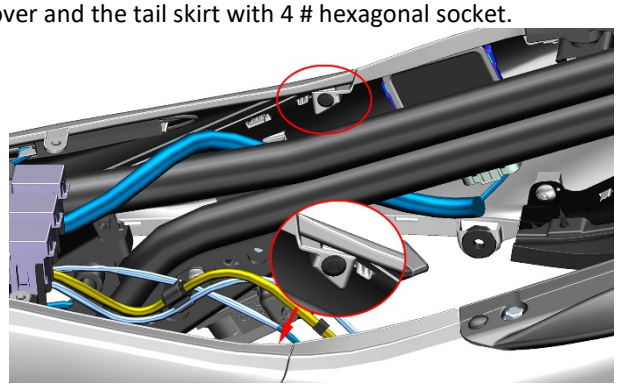

b. Remove one M6 on the right part of the fuel tank cover plate with 8 # socket × 22 bolts (1), remove bushing (2) and buffer rubber (3); Grasp the mark on the right part of the fuel tank cover plate (green rectangle) and pull it diagonally upwards in the direction of the arrow until the buckle of the right part of the fuel tank cover plate is separated from the middle part of the fuel tank cover plate and the right part of the tail skirt (red area).

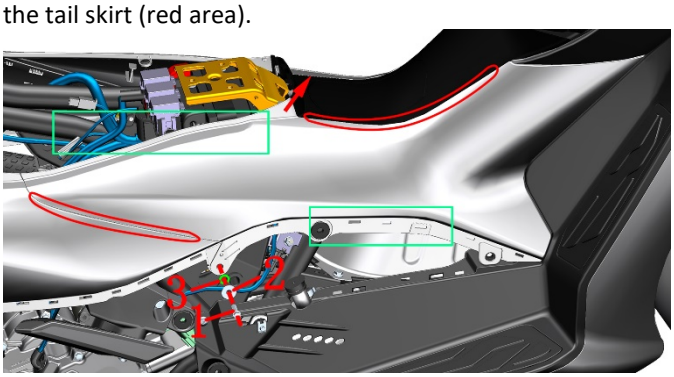

c. Grasp the mark (green rectangle) on the right decorative cover of the fuel tank cover by hand and pull it out in the direction of the arrow until the mushroom button (red circle) on the fuel tank cover is pulled out, and then remove the right part of the fuel tank cover.

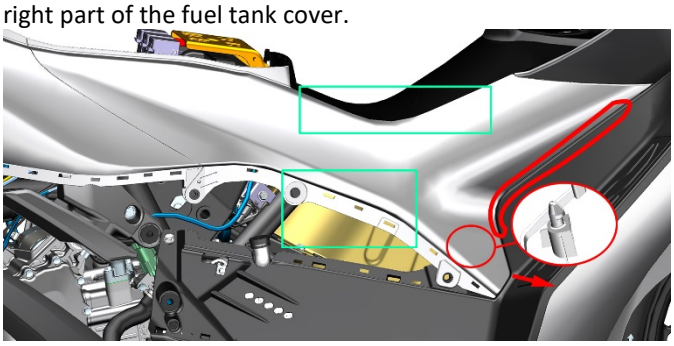

c. Use the same method to remove the left part of the fuel tank cover plate.

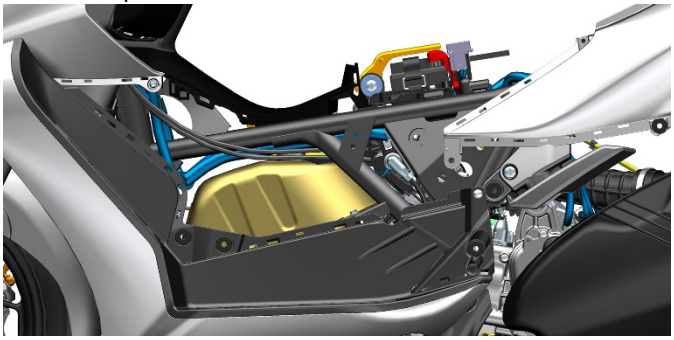

Removal of the front left and right panels

a. Remove M6× 12 bolts (1) from the front left and right panels with 4 # hexagonal socket and expansion nails.

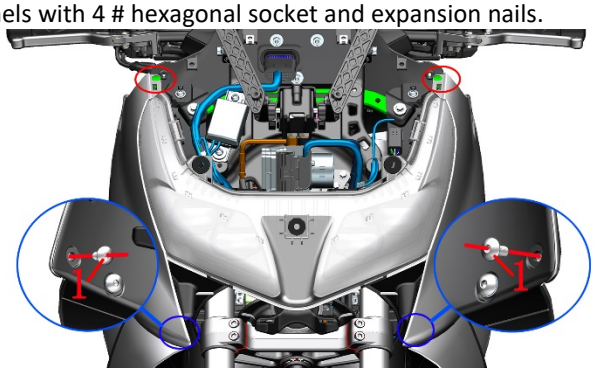

b. Use the 4 # hexagonal socket to remove the M6 × 14 at the lower part of the left panel Shoulder bolt (2). Grasp the mark of the front left panel (green rectangle) with both hands, and carefully pull out in the direction of the big arrow. When pulling out, it is necessary to separate the buckle positions of the connection between the front left panel and the middle cover of the fuel tank, the front storage box panel, the speedometer panel, and the front left panel lining (4 buckles in the red area, 4 buckles in the yellow area, 5 middle covers of the fuel tank, 8 front storage box panels, and 6 speedometer panels) in the order pointed by the small arrow, Remove the front left panel.

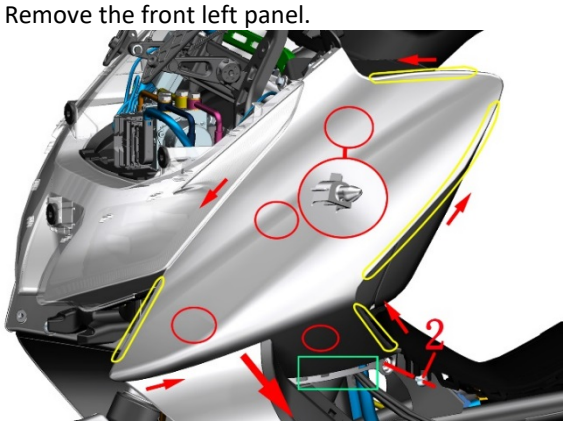

c. Use the same method to remove the front right panel.



Disassembly of the of the Speedometer panel

a. Remove the two M6× 14 Shoulder bolt (1) at the headlamp with the 4 # hexagonal socket.

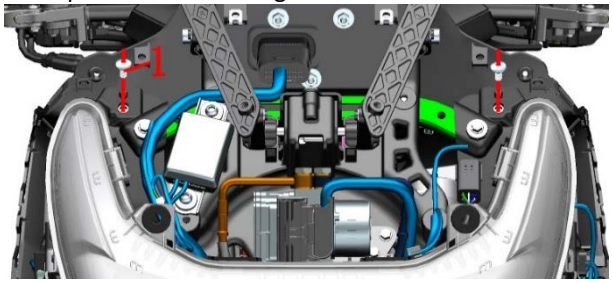

b. Remove the M6× 14 Shoulder bolt (1) at the left of the headlamp with the 4 # hexagonal socket. Remove the expansion nail with 4 # hexagonal socket. Remove the bolts and expansion nails on the other side in the same way.



c. Grasp the speedometer panel with one hand and lift it slightly in the direction of the big arrow, and pull out the speedometer plug connected to the speedometer with the other hand.

Caution: When pulling out the plug, first press the lock catch pointed by arrow a on the reverse side of the plug with your finger, and then pull out the plug. Do not directly pull out the speedometer plug; Finally, grasp both sides of the speedometer panel and lift it in the direction of the big arrow and pull it outward to take out the speedometer panel

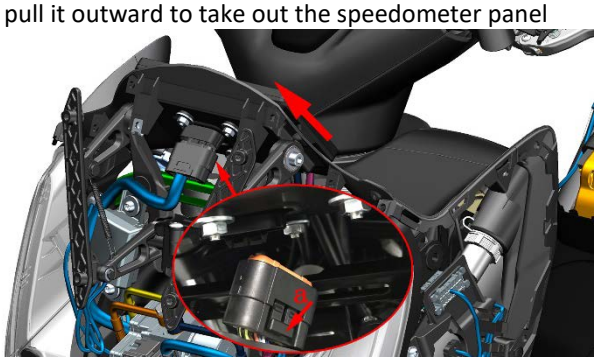

Removal of front left and right panel bottom lining

a. Use the 4 # hexagonal socket to remove one M6 × 14 Shoulder bolt (1) from the bottom lining of the left panel and the surrounding upper part (red circle).

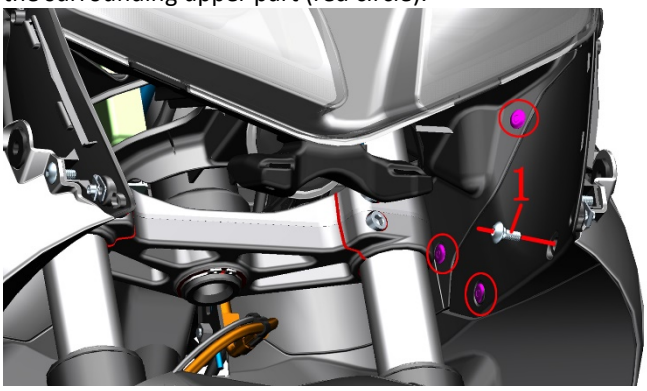

b. Remove 3 expansion nails (red circle) from the bottom lining of the left panel with 4 # hexagonal socket; Remove 2 bolts (1) and 2 bolts (4) from the bottom lining of the left panel with 4 # hexagonal socket, and remove the bushing (2) and buffer rubber (3).

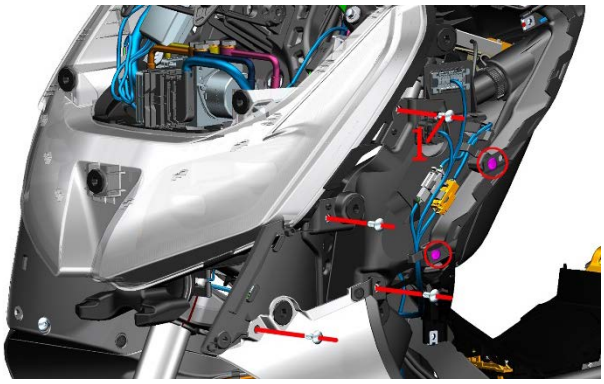

c. Unhook the plug fixed on the left panel lining and arrange it to one side. Remove the bottom lining of the left panel.

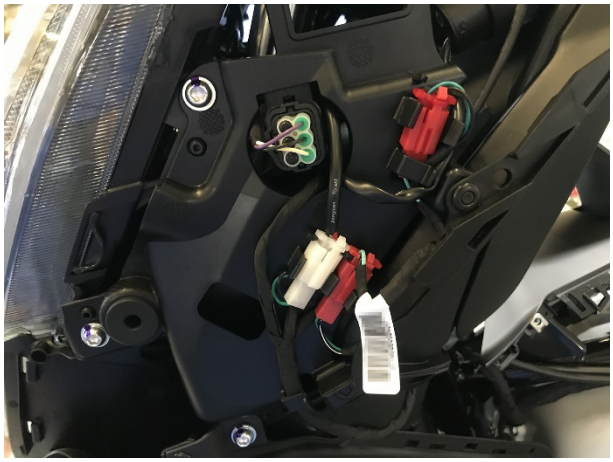

d. Use the same method to remove the right panel underlay



Disassembly of headlights

a. Use 8 # socket to remove two M6 bolts (1) on the headlight, and remove the bushing (2) and buffer rubber (3).

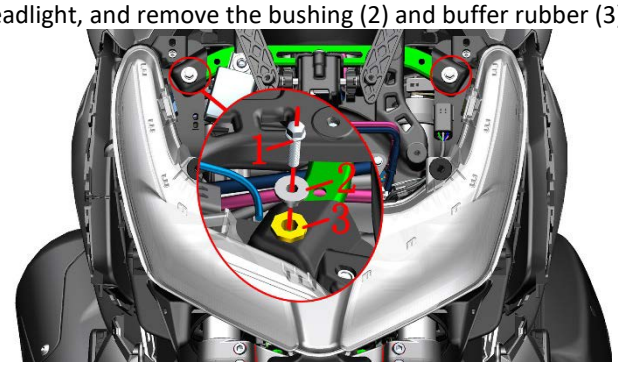

b. Unfasten the wire clamp and tidy up the harness.



c. Push the storage box away slightly, use 8 # socket to remove the bolt (1), and remove the bushing (2) and buffer rubber (3). Remove the bolts on the other side in the same way.

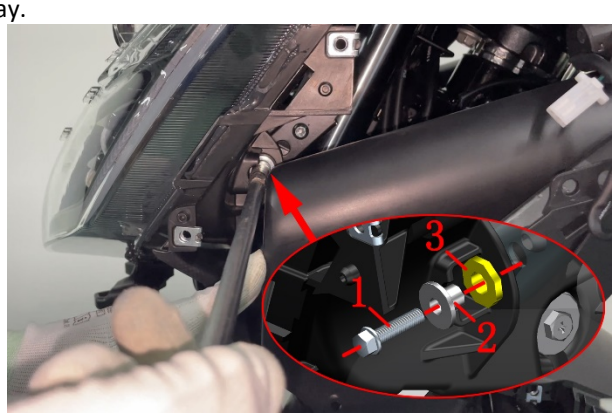

d. Hold the headlamp with one hand and take it out for a distance, pull out the headlamp plug with the other hand and take out the headlamp completely.



Removal of windshield base

a. Find two plugs of the windshield controller at the windshield motor and pull them out. Remove M6 fixing windshield motor with 4 # hexagonal socket × 16. Remove the windshield motor, bushing and buffer rubber.

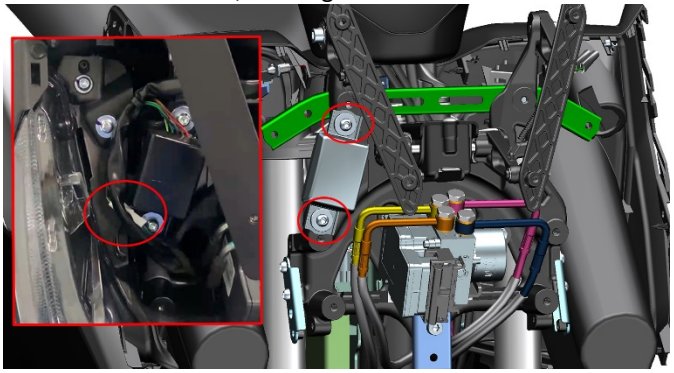

b. Remove the two M6× 16 on the hydraulic control unit bracket with 8 # socket. Remove the hydraulic control unit with bolts. Remove M8 from horn bracket with 6 # hexagonal socket × 30, remove the horn.

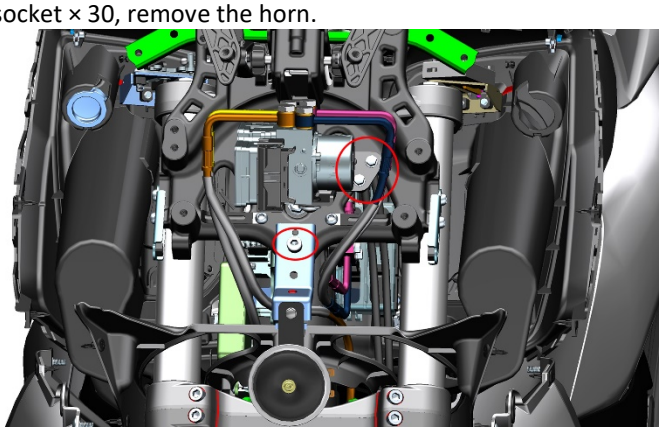

c. Grasp the windshield base assembly and remove 3 M8 × 25 bolts with 12 # socket, remove the windshield base assembly from the motorcycle.

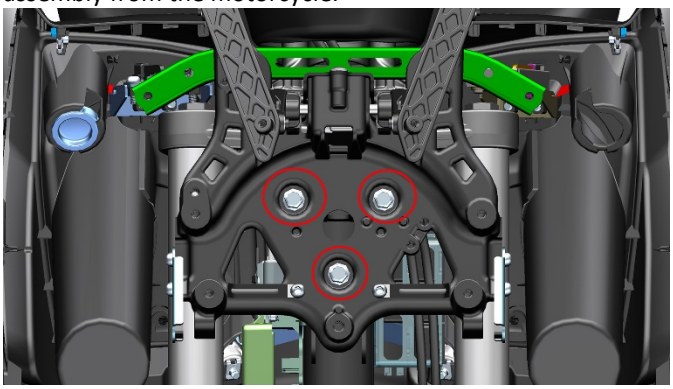

d. Remove 2 circlips with pointed nose pliers, grasp the left windshield bracket, take down the pin shaft and buffer rubber, and take down the rocker arm spring. Remove the right windshield and rocker spring in the same way.

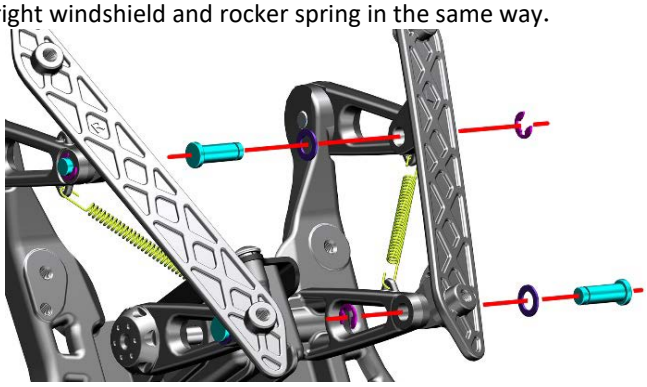

e. Remove 2 M6× 16 with 4 # hexagonal socket. Remove the spring washer. Separate the windshield motor pressing plate, windshield motor assembly and windshield base assembly.

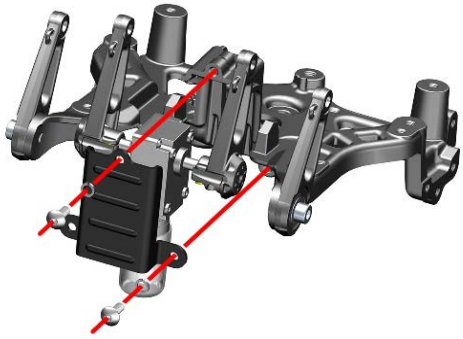

f. Use a Phillips screwdriver to remove two M4 × 16 bolts, separate the rocker arm pressure block from the right lower rocker arm. Remove 2 pieces of rocker arm buffer rubber from the rocker arm pressure block. Remove the left lower rocker arm in the same way.

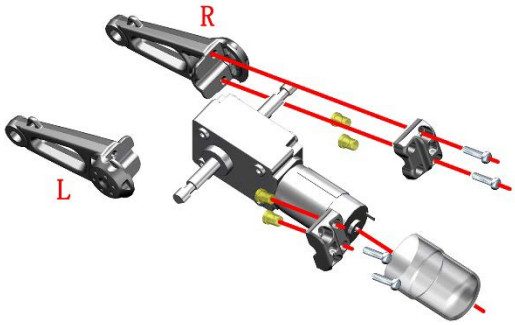

g. Remove M8× 16 Bolts with 6 # hexagonal socket, remove the gasket, bearing and upper rocker arm.

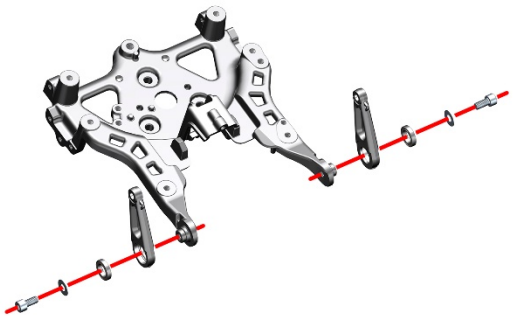

Disassembly the middle cover of the fuel tank

a.Connect the positive and negative terminals of the main wiring harness of the battery to open the tank lock or open the tank lock before removing the battery; Remove the M6x12 bolt(1) fixing the oil tank cover with the 4# inner hexagon, and unscrew the threaded oil tank

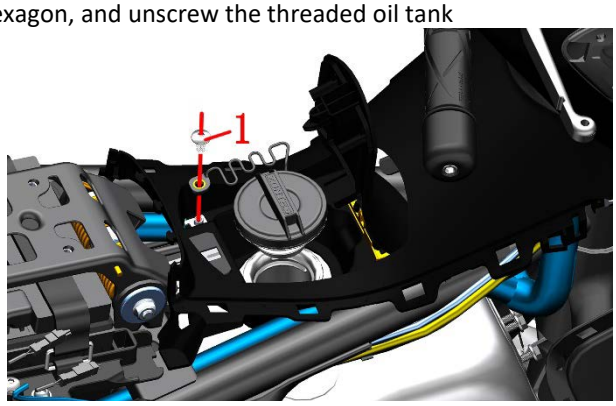

b. Grasp the mark (green rectangle) on the middle cover of the fuel tank and pull it out in the direction of the arrow until the mushroom button (red circle) on the middle cover of the fuel tank is pulled out.

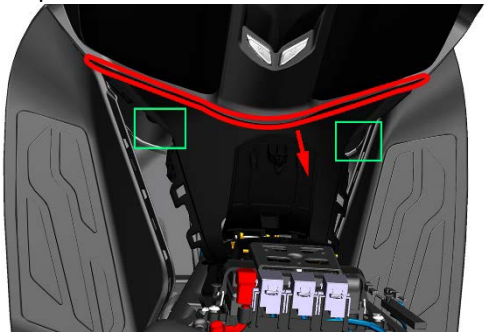

c. Find and unplug the fuel tank lock connector from the left side of the fuel tank, and sort out the harness of the fuel tank lock.



d. Remove the oil tank cover; Press the cushion bracket with one hand and take out the middle of the tank cover plate with the other hand.

Caution: When taking out the middle part of the tank cover plate, it is necessary to pay attention to the wiring harness of the tank lock, so as not to get stuck and avoid pulling the wiring harness of the tank lock; to prevent dirt matters from entering the tank, immediately screw the tank cover back to the tank after removing the middle cover.



e. Press the big arrow to break the clip fixing the fuel tank lock to both sides and then remove the fuel tank lock; Press the small arrow to press the buckle of the fuel tank cover and fuel tank bracket towards the middle, and then remove the fuel tank cover and fuel tank lock. Pay attention to the strength when breaking the buckle to avoid breaking.

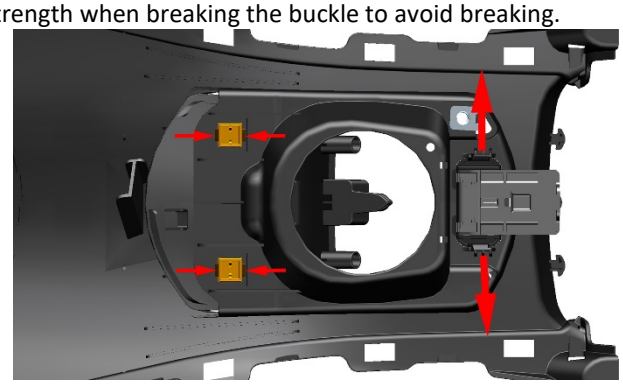

f. Take down the circlip with pointed nose pliers and pull out the rotary shaft. Remove the torsion spring and damping. Pay attention to the position of the torsion spring during installation.

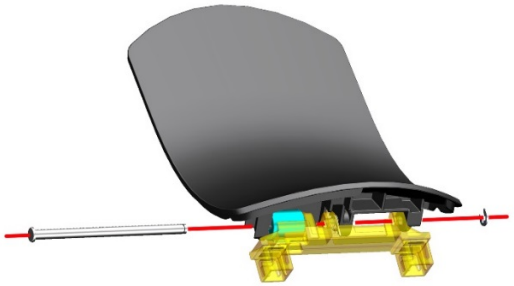

Disassembly the left and right storage boxes

a. Press the switch indicated by the small arrow to open the front right storage box; Remove M6× 14 Shoulder bolt (1) with 4 # hexagonal socket. Remove the front right storage box cover and the front right storage box inner cover bracket togethe



b. Take down the circlip with pointed nose pliers and pull out the rotary shaft. Remove the torsion spring and damping. Pay attention to the position of the torsion spring during installation.

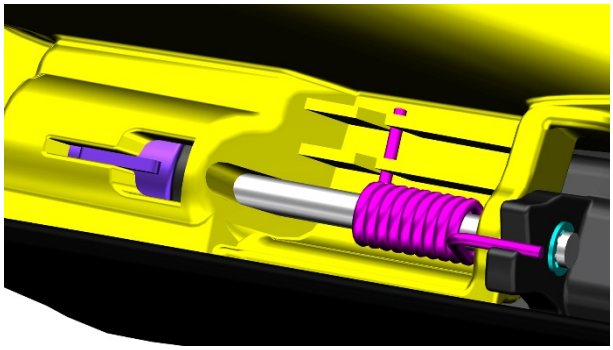

c. Remove 3 M6 × 14 with 4 # hexagonal socket to separate the inner and outer covers. Remove 3 clamp nuts from the outer cover.



d. Open the front left storage box. There are three ways to open the front left storage box:

1. Before removing the battery, press the switch next to the switch for opening the front right storage box to open the front left storage box. 2. Use the battery to connect the positive and negative poles of the main harness to turn on the motorcycle. Press the switch next to the front right storage box switch to open the front left storage box. 3. Find the front left storage box switch next to the tap lock and behind the front left storage box, and turn the protruding part of the switch outward in the direction of the arrow to open the front left storage box.

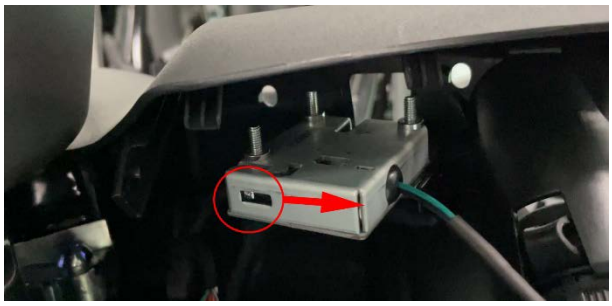

e. Disassemble the left storage box outer cover according to the steps of the right storage box outer cover.

Removal of front storage box panel

a. Remove 2 non-standard M6× 14 on the front storage box panel with 4 # hexagonal socket.

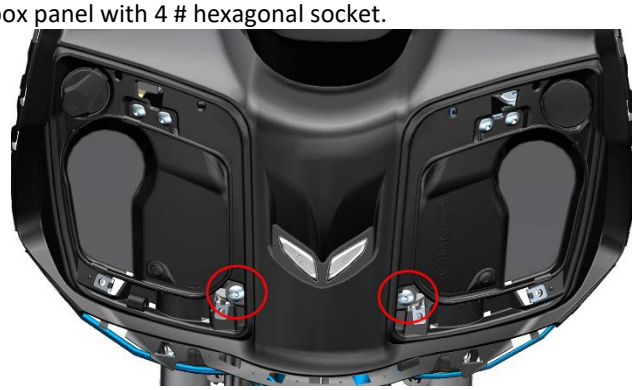

b. Find and unplug the front left storage box lock connector and front storage box switch on the front storage box next to the tap lock on the left side of the front storage box panel.



c. Find and unplug the PKE connector of PKE on the right side of the front storage box panel, and find and unplug the OBD connector on the left side of the front storage box panel. Remove the front storage box panel.



d. Turn to the back and pull the cable out of the lock frame in the direction of the arrow. Turn back the front and remove M6× 14 with 4 # hexagonal socket bolts. At the same time, grasp the right storage box lock assembly ① and the electronic front storage box lock assembly ② on the back.



e. Turn over to the back and remove 3 ST4.2 × 12 with 5 # hexagonal socket After self tapping, remove the front storage box switch from the panel. Remove the latch from the switch.

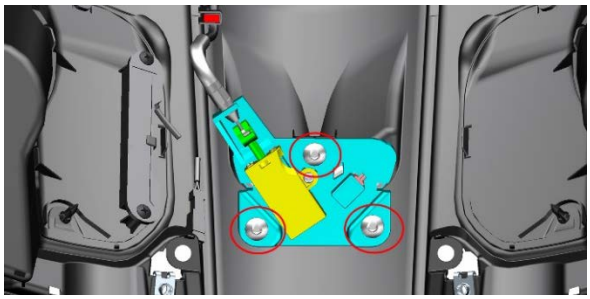

f. Remove 2 expansion nails with 4 # hexagonal socket, and remove the left and right cover plates of the storage box. Use a cross screwdriver to remove the two cross tapping screws on the front left storage box cover, and remove the non inductive antenna. Remove the 2 front left storage box rear glues. Loosen the plastic nut pointed by the arrow, take out the USB charging cable, and remove the matching charging port rubber sleeve.

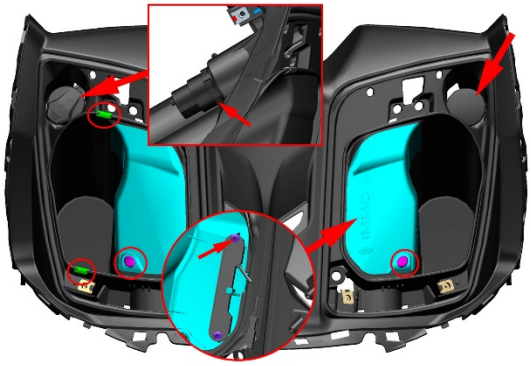

g. Remove 2 M6× 16 with 5 # hexagonal socket. Separate the right storage box lock bracket from the right storage box lock.

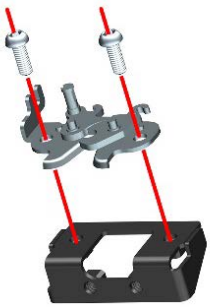

h. Use a Phillips screwdriver to remove three M4 × 25. Remove the electronic storage box lock after the bolt.



Removal of left and right pedals and surrounding left and right parts

a. Use a screwdriver to lift out the pedal rubber pad and pedal rubber pad pressing plate from the position indicated by the small arrow, and pull up the pedal rubber pad and pedal rubber pad pressing plate in the direction of the big arrow until the pedal rubber pad and the rear pedal rubber pad pressing plate are taken out.

Caution: When using the screwdriver, wrap the screwdriver with non-woven fabric and other tools to prevent scratching the paint surface.

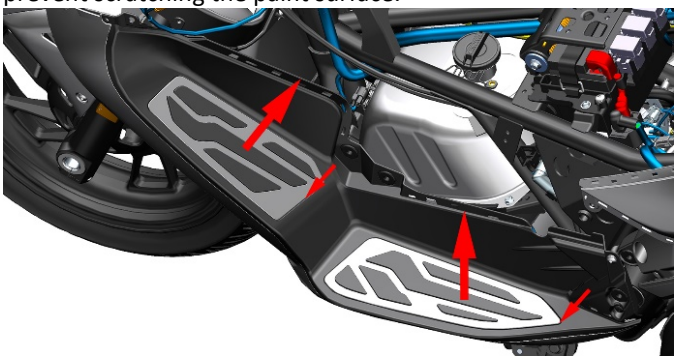

b. Remove the M6× 14 Shoulder bolt (1) at three places on the left pedal with the 4 # hexagonal socket. Remove the pedal together with the left surround.

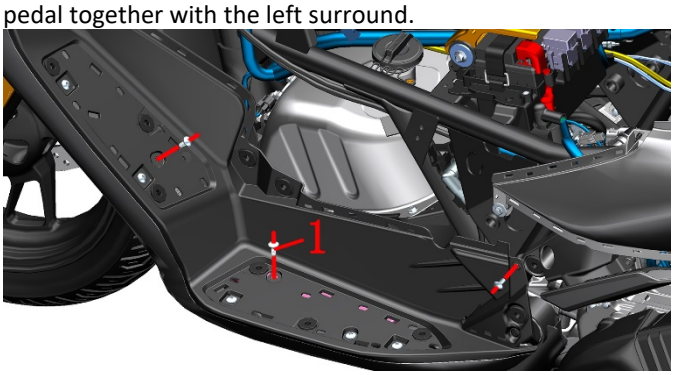

c. Use 4 # hexagonal socket to remove the two M6× 14 Shoulder bolt (1) parts on the left of the middle part of the enclosure.

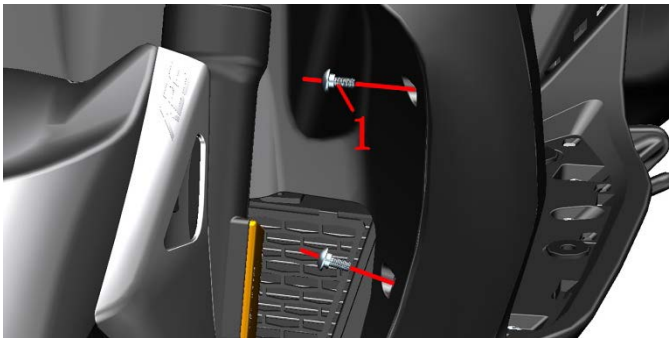

d. Use the 4 # hexagonal socket to remove the 1 M6× 14 Shoulder bolt (1) at the left of the surrounding base plate connection; Then use the 4 # hexagonal socket to remove the 2 expansion nails (2) at the left part of the surrounding base plate connection.

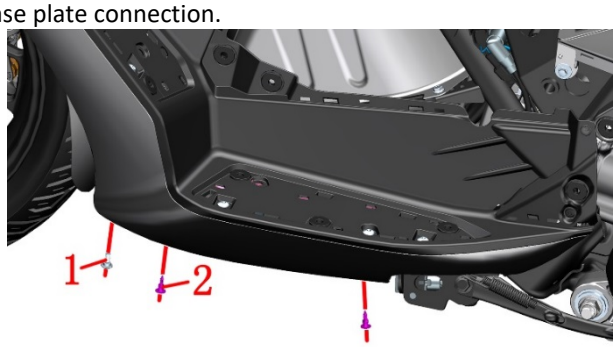

e. Grasp the surrounding left part and left pedal with both hands, and take out the surrounding left part and left pedal in the direction of arrow.

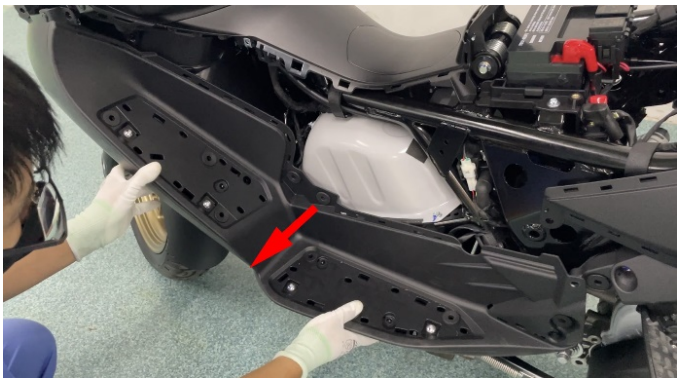

f. Use the same method to remove the surrounding right part and the right pedal.



g. Use the 4 # hexagonal socket to remove the 4 M6 × 14. Bolts (1) positions surrounding the left connecting the left pedal and two expansion nails (2) of the shaft shoulder. Separate the left pedal from the surrounding left part.



h. Separate the right pedal and the surrounding right part in the same way.

Disassembly of the surrounding bottom

a. Grasp the rear part of the around the bottom plate by hand, and pull it back in the direction of arrow until the bottom plate is taken out.

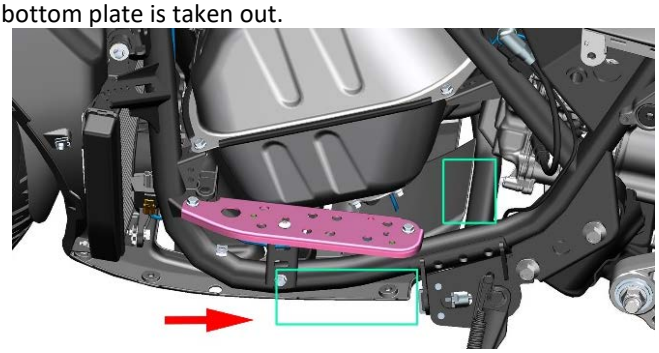

Removal of the surrounding middle part

Use 4# inner hexagon to remove the two M6×12 bolts connecting surround middle part and the front storage box panel and then remove the middle surround.

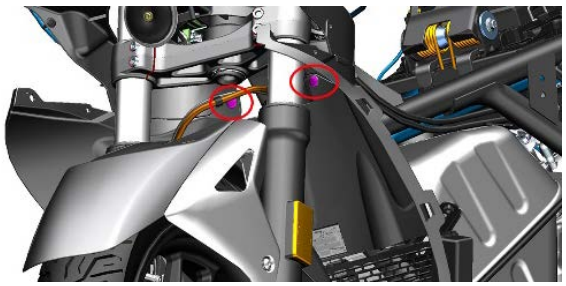

Radiator Deflector Removal

a. Remove two expansion nails with 4 # hexagonal socket and take down the radiator deflector.

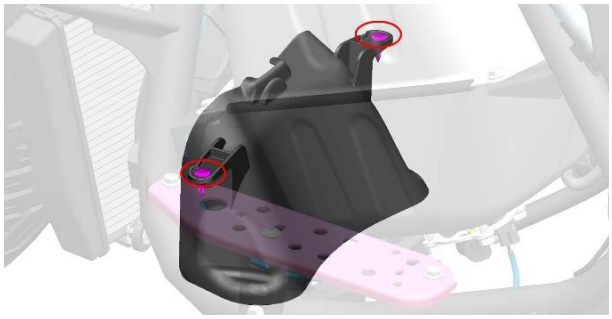

Disassembly of the rear hand rest

a. Remove the bolt decorative buckle on the bolt, and remove 6 M6× 12 bolts (1) with 4 # hexagonal socket; Use 12 # socket to remove 5 M8 × 25 bolts (4); Remove M6× 14 Shoulder bolt (3) at the connection between the middle part of the tail skirt and the rear armrest with 4 # hexagonal socket; Grasp any part of the rear armrest with both hands, lift the rear armrest up in the direction of the arrow, and then remove the rear armrest.

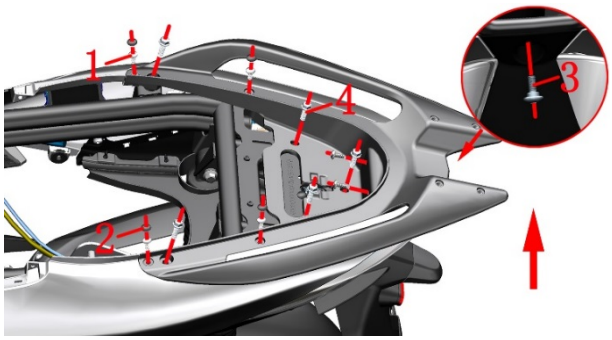

Removal of tail skirt and tail lamp

a. Use the 4 # hexagonal socket to remove the 3 expansion nails (purple) connecting the left tail skirt and the middle of the tail skirt



b. Use the 4 # hexagonal socket to remove the 3 expansion nails (purple) connecting the right apron and the middle of the tail group.

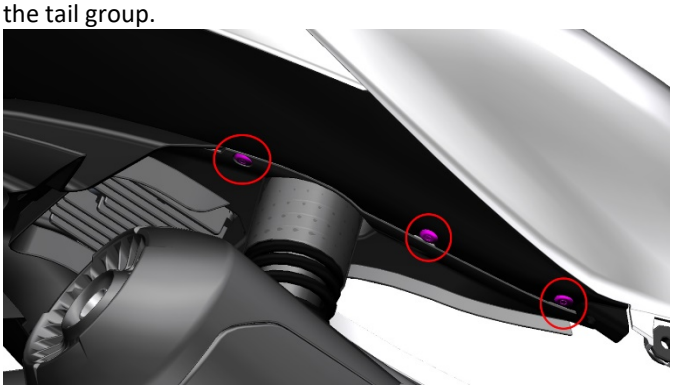

c. Grasp both sides of the tail skirt and pull out the left and right tail skirts together with the left and right tail lamps and the middle of the tail skirt in the direction of the arrow. Note: Pull out carefully to avoid scratching the cover and tail lamp.

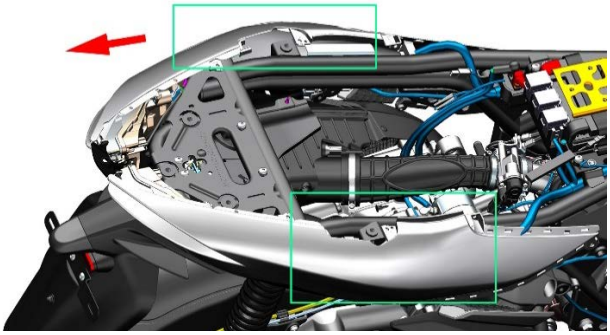

d. Remove the three non-standard M6× 14 Shoulder bolt (4) connecting the left part of the tail skirt and the left tail lamp with the 4 # hexagonal socket and an expansion nail; Use the 4 # hexagonal socket to remove the 2 M6× 12 Bolts (1) connecting the left part of the tail skirt and the middle part of the tail skirt, remove one bushing (2) and one buffer rubber (3). Take off the left part of the tail skirt.

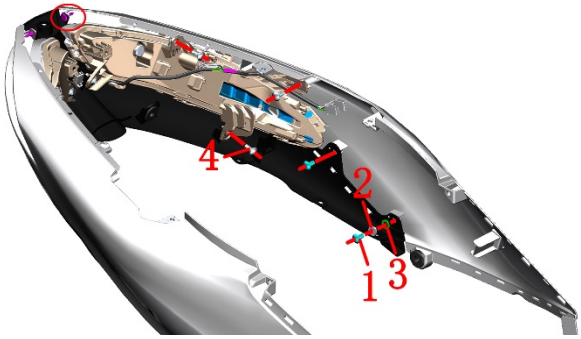

e. Remove the right part of the tail skirt in the same way.

f. Remove two M6 with 4 # socket head × 14 Shoulder bolt (4). Separate the left and right tail lights from the middle of the tail skirt

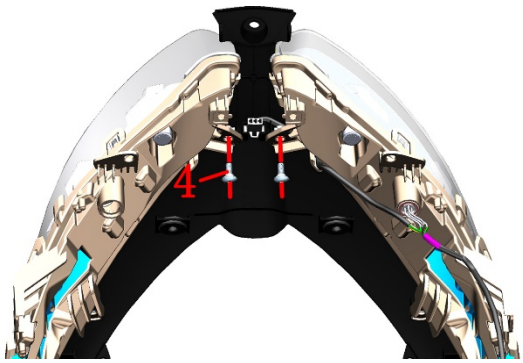

Removal of rear mud flap

a. Use 4 # hex socket to remove the two M6's connecting the rear inner mud pan to the frame × 14 Shoulder bolt (1) and one M6 × 16 Bolts (2).

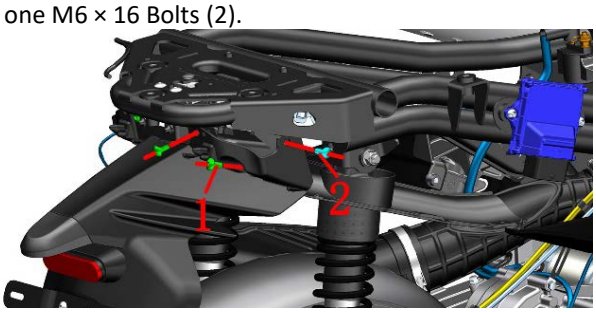

b. Find and remove the connectors of the rear license plate lamp, left turn light lamp and rectifier from the rubber sleeve on the left side of the frame.

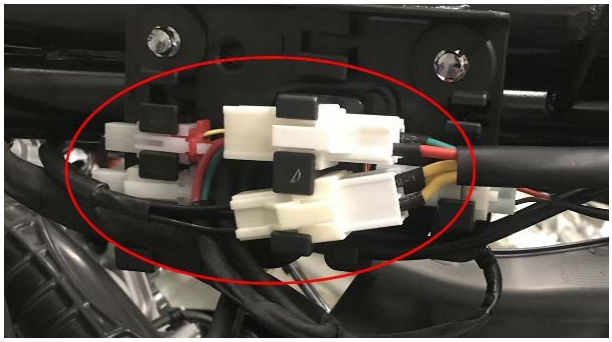

c. Remove the bolts on the left side in the same way, and put down the rear inner mud pan. One person uses 14 # socket+ratchet wrench to fix the non-standard M10 above the rear shock absorber × one point five × 66 bolts (5), one person uses 14 # socket or box wrench to fix the non-standard M10 above the rear shock absorber from the outside of the frame × 1.5 Remove the nut (6), torque: 30N. m (3.1 kgf. m, 22 lbf. ft); Use the same method to remove the bolts and nuts on the other side.

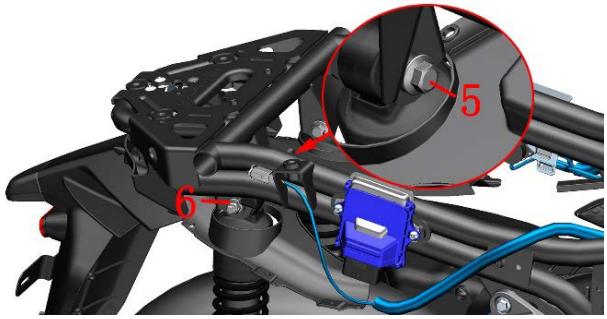

d. Use a ratchet wrench+8 # socket to extend under the rectifier and remove the two outer hexagon M6× 22 bolts (7) fixing the rectifier.

Caution: The rectifier can not be taken out at this time, just hang it in the air

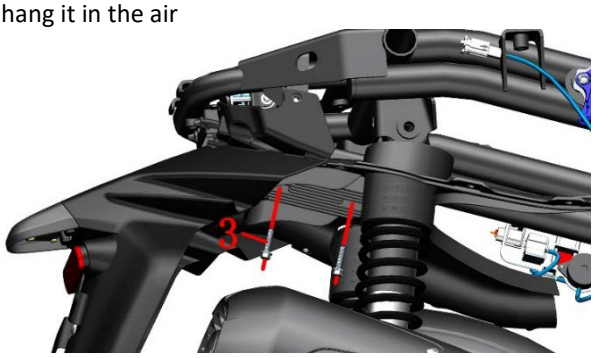

e. After sorting out the harness of the rectifier, grab the rear inner mudguard and pull it down as indicated by the arrow until the gap between the frame and the rear inner mudguard is enough to pass the two connectors of the rectifier through the reserved holes on the rear inner mudguard in turn. (**Caution:** the holes on the rear inner mudguard are not enough for the two rectifier connectors to be taken out at the same time, so it is necessary to take out the rectifier connectors one by one.) Take out the rectifier.

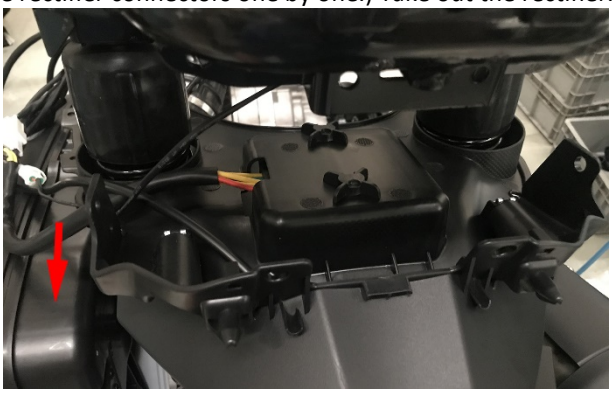

D155 Follow this step, D125/250/350 skip.

After sorting out the harness, grasp the start-stop controller and unplug the three plugs on the controller.(Note: Do not disassemble by force to avoid damaging the controller.) Take out the start-stop controller.



D155:After firmly removing the start-stop controller, remove two M6 × 16 bolts and two bushings at the bottom with 10 # sleeve, and then remove the start-stop controller assembly.Remove 3 M6 × 16 bolts with 10 # sleeve to separate the start-stop controller from the bracket.

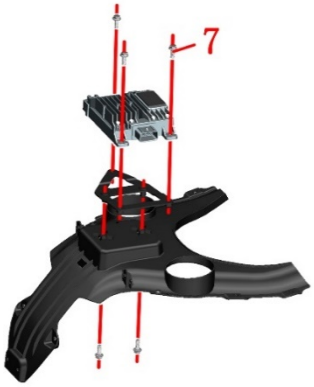

f. One person lifts the rear or both sides of the frame in the direction of the big arrow, until the gap between the frame and the rear shock absorber is enough, and then the inner mudguard is taken out. One person grabs the two sides or the middle of the rear inner mudguard, and then takes it out according to the direction of the small arrow; (**Caution:** When taking out the rear inner mud board, the rear shock absorber will fall forward. To prevent scratching the paint or damaging parts, take the rear inner mud board with one hand and hold the rear shock absorber with the other.) After taking out the rear inner mud pan, align the rear shock absorber with the mounting point on the frame, and slowly lower the frame until the upper part of the rear shock absorber is sleeved into the mounting point on the frame.

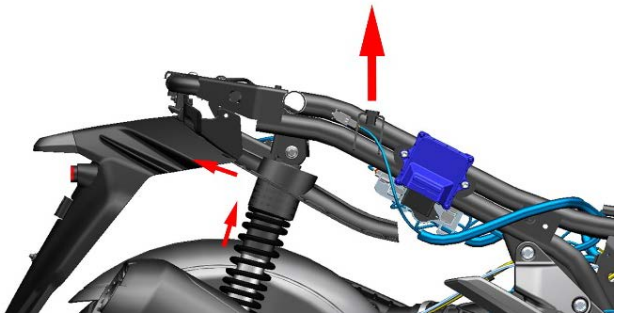

Removing the pke.

After removing one expansion nail, remove the two shaft shoulder bolts fixing the PKE bracket with 4 # hexagon socket, and remove the PKE assembly.Remove the self-tapping screw with a cross screwdriver to remove the charging port seat. Remove the electroless induction antenna.Remove the two shaft shoulder bolts fixing the PKE with the 4 # hexagon socket. Remove the two cleat nuts from the bracket.

