ZT368-250T-G
Maintenance Manual



2026-10-13

Preface

All the information, illustrations, photos, etc. collected in this manual are compiled based on the latest product of ZT368T-G low pedal low seat version of National IV . However, due to the continuous improvement of products and other changes, your motorcycle may be inconsistent with this manual. For color or upgrade, please refer to the part code of ZONTES official website. This manual will not list it in detail; if the part name in this manual is inconsistent with ZONTES official website, ZONTES official website shall prevail.

If some of the contents of this manual are insufficient, please refer to the " Driving Manual". The latest version of the driving manual can be downloaded in PDF format in the corresponding model introduction on the ZONTES official website.

© Guangdong Tayo Motorcycle Technology Co., Ltd.
all rights reserved

User Notice

This manual is compiled by Guangdong Tayo Motorcycle Technology Co., Ltd. for the guidance of dealers or service personnel . This manual cannot provide more detailed knowledge about motorcycles and is only used as a maintenance reference. If you do not have the corresponding knowledge such as electrician and mechanic, improper assembly or maintenance failure may occur during repair .

If you need to clean or wash the body parts of this vehicle, you should use neutral motorcycle wash liquid or tap water or diesel, kerosene, etc. Acidic or alkaline motorcycle wash liquids will cause irreversible corrosion to the paint, electroplated surface, anodized surface, etc. on the surface of the parts ; gasoline will cause premature aging or hardening of sealants, gaskets , rubber parts, etc., reducing the service life . Use non-woven cloth without residue for wiping. Ordinary rags may have cloth scraps or wool left on them , affecting assembly or causing other adverse effects.

Our company will try its best to update this manual in a timely manner after any changes are made to the product .

The following are the meanings of the icons in this manual:

DANGER	Failure to comply may result in personal injury or death of the driver or maintenance personnel ; or cause serious damage to spare parts , shortening of service life, etc.
WARNING	Failure to comply may result in personal injury or death to the driver or maintenance personnel ; or may result in damage to spare parts , abnormality, etc.
CAUTION	Failure to comply with warnings may result in personal injury to the driver or maintenance personnel ; or matters requiring special attention during disassembly and assembly
	Indicates that there is a torque requirement at this location
	Indicates that the part needs to be replaced after disassembly
	To facilitate electronic reading, if there is a symbol on the right side of the step, you can click the symbol to quickly jump to the corresponding chapter

Contents

Preface 2
User Notice 3
Contents 4
1. Vehicle Information 10
Notice before service 10
Motocyle body stickers 11
368G/368G(ETC) Technical Parameters 12
Front wheel/steering system 12
Rear wheel/suspension system 12
Braking system 13
Battery/Charging System 13
Lighting/Instrument/Switch Description 13
Tightening torque 14
Bolt tightening torque for general fastening parts 14
Cable/pipeline/electrical components distribution diagram 15
1. Lighting distribution map 15
2. Throttle cable(ETC witch out Throttle cable) 15
3. Brake pump and brake oil pipe 16
4. Calipers, brake hoses and wheel speed sensors 16
5. Braking system parts distribution diagram 17
6. Oil supply system 18
6.1 Fuel evaporation 18
6.2 Fuel supply 19
7. Cooling system accessories distribution diagram 20
8. Electrical device layout diagram 22
9. Intake and exhaust system 24
Tool 25
Expansion nail description 27
2. Maintenance 28
Notice before service 28
Maintenance cycle table-368G、250G 29
Maintenance cycle table（ETC） 31
Air filter (filter element) , air inlet filter element 34
1. Support the vehicle firmly 34
2. Remove the left engine cover 34
3. Replace the air inlet filter 34
4. Remove the air filter housing 34
5. Replace the air filter element 35
6. Check the air filter waste oil pipe 35
7. Reinstallation 35
Muffler bolts and nuts 36
Spark Plug 37
1、Remove the spark plug 37
2、Check the spark plug 37
Engine oil 38
1. Drain the engine oil 38
2. Replace the fine filter 38
3. Add engine oil 39
4. Replace gearbox oil 39
5. Confirm the oil level 40
Throttle body 40
1. Clean carbon deposits without removing the throttle valve body 40
2. Remove the stepper motor and clean the carbon deposits 40
3. Remove the throttle valve body assembly and clean the carbon deposits 40
4. Remove the sensor from the throttle valve body 41
5. Throttle valve body troubleshooting process 42

Throttle cable 42
1. Inspection 42
ETC do not require adjustment of the free angle 43
2. Adjust the throttle cable clearance 43
Idle -Done 43
Check the idle speed 43
Fuel Evaporative Pollutant Control System 43
Heat sink 46
1. Check the coolant 46
2. Add coolant (antifreeze) to the auxiliary water tank 46
3. Add coolant to the main water tank 46
4. Release coolant 47
5. Check whether the fins of the radiator tank are deformed or the air duct is blocked 47
6. Check all water pipes for leakage and aging 48
Fuel Pipe 50
1、Use an endoscope with LED lights to check for fuel pipe leaks 50
The above image shows a schematic of an LED-equipped endoscopic device. This image is sourced from the internet, and the copyright belongs to the original author. Please do not use it for other purposes. 50
2、Replace high-pressure oil pipe 50
3、fuel pump 50
3.1Measure fuel pressure using an oil pressure gauge 50
3.2Simple Test Fuel Pump 51
4、Abnormal Fuel Pressure Handling 51
Brake System 52
Brake System Component Diagram： 52
1、Check brake components 53
2、Check the front and rear brake switches 54
2.1 Check the brake switch 54
2.2 Replace the brake switch 54
3、Lubricate the moving parts of the brake handle 54
3.1 Pre-lubrication brake handle 54
3.2 Brake lever after lubrication 54
3.3 Replace the brake handle 54
4、Adjust the brake handle 54
5、Replace brake pads 55
5.1 Replace front brake pads 55
5.2 Replace rear brake pads 56
5.3 Brake Pad Abnormal Noise 57
6、Replace the brake disc 57
6.1 Replace the front brake disc 57
6.2 Replace the rear brake disc 57
Brake hose 58
Brake fluid 58
1. Add brake fluid to the front and rear disc brake master cylinders 58
2. Replace brake fluid 58
2.1 Replace the front brake fluid 58
2.2 Replace rear brake fluid 59
3. Exhaust of brake system 59
Tire 59
1. Check the tires 60
2. Replace tires 60
Steering mechanism 61
1、Check the steering mechanism 61
2、Adjust the steering mechanism 61
3、Maintain the steering bearing 61
4、Fault 62
Front fork 62
1. Check the appearance 62
2. Check shock absorption performance 62
3. Disassemble the front shock absorber 63

4. Correct the front fork tube 63
5. Troubleshooting 63
Rear Shock Absorber 63
1、Check 63
2、Adjust preload 63
3、Replace the rear shock absorber 64
Bolts and nuts for body and engine installation 64
1、Check fasteners at critical parts 64
2、Check engine fasteners 65
Side Bracket - Complete 65
1. Inspection 65
2. Lubrication 66
Main bracket 66
1. Inspection 67
2. Lubrication 67
3. Install the main bracket 67
4. Replace the main bracket reset spring column 67
Sound, light and electrical device inspection 67
1. Inspection 67
Charging method 69
2. Headlight height adjustment 70
3. Fuse box 71
4. Troubleshooting 72
4.1 Right-hand switch 72
4.2 Right-hand handle auxiliary switch 72
4.3 Left handlebar switch 73
4.4 Speakers 73
4.5 Left handle switch 75
4.6 Lamps 76
3. Electronic fuel injection system 77
Notice before service 77
Fault Codes 78
1. Read the fault code through the instrument 78
2. Read the fault code through the diagnostic instrument 78
3. Clear fault codes 81
3.1 Manual Removal 81
3.2 Clear using diagnostic instrument 81
EFI parts layout 82
Fault diagnosis and troubleshooting of EFI parts 84
1. EFI relay 84
2. Crankshaft position sensor 84
3. Throttle valve body 84
3.1 Common fault phenomena 84
3.2 Sensors 84
3.3 Troubleshooting process 85
4. Water and oil shared sensor 85
5. Injector 85
6. Oxygen sensor 86
6.1 Detection 86
7. Ignition coil 86
8. Carbon canister solenoid valve 86
9. Fuel pump 87
10. OBD interface 87
11. MSE 6.0 ECU 87
1 2. Dump switch 88
Troubleshooting process 88
Disassembly 88
Examine 88
Engine cannot start and there is no sign of starting fault diagnosis process 89
Engine cannot start with motorcycle fault diagnosis process 89
Acceleration failure 90

High idle speed on hot motorcycle 90
Cooling motorcycle idling unstable 90
Unstable idling speed, easy to stall 91
EFI fault indicator light always on analysis flow chart 92
4. Ignition system 93
Notice before service 93
Troubleshooting 94
Spark plug no spark 94
Ignition system layout 95
Ignition system electrical schematics 95
Ignition system inspection 96
Ignition coil 96
5. Starting system 97
Notice before service 97
Troubleshooting 97
Starter motor does not run troubleshooting process: 97
1. Starter relay 97
2. Starter motor 98
3. The starting motor runs slowly 98
4. The starting motor works normally, but the engine cannot start 98
Starting system layout 98
Starting system electrical schematics 99
Starter motor 99
1. Remove the starter motor 99
2. Disassemble the starter motor 100
Examine 101
Starter motor front cover: 101
Starter motor rear cover: 101
Electrocution: 101
Check the starter relay 102
1. Operational inspection 102
2. Check the relay coil 102
2.1 Input Line 102
2.2 Ground Wire 102
3. Check the starting relay 102
4. Disassembly and assembly of the starting relay 103
6. Fuel supply system 104
Notice before service 104
Fuel tank removal 105
1. Disassemble the fuel tank assembly 105
2. Remove the fuel pump 106
3. Remove the oil level sensor 106
4. Remove the external parts of the fuel tank assembly 106
Examine 107
1. Fuel pressure test 107
2. Fuel pump inspection 107
3. Oil level sensor 107
7. Cooling system 108
Notice before service 108
Troubleshooting 108
1. Engine temperature is too high : 108
2. Engine temperature is too low: 108
3. Coolant leakage 108
Coolant system distribution diagram 109
Coolant flow diagram 111
Cooling system disassembly 113
Coolant system clamp /clamp distribution diagram 113
Thermostat assembly and small loop 114
Cooling system accessories 117
1. Main water tank 117
2. Water tank filling port 117

2.1 Overall sealing inspection 117
2.2 Pressure relief valve inspection 117
3. Auxiliary water tank 117
4. Water and oil shared sensor 117
5. Thermostat 118
5.1 Inspection 118
5.2 Fault phenomenon 118
5.3 Disassembly 118
6. Water pipes 119
7. Check the water pump cover assembly 119
8. Braking system 120
Notice before service 120
Troubleshooting 121
Brake handle soft 121
Brake handle hard 121
Disassembling the disc brake master cylinder and caliper 121
Disassembling the front disc brake master cylinder 121
Disassemble the rear disc brake master cylinder 122
Disassembling the front disc brake caliper 122
Disassemble the rear disc brake caliper 123
Wheel speed sensor and induction gear ring 123
9. Battery /Charging System 124
Notice before service 124
Troubleshooting 125
Charging system layout 126
Electrical Schematic 126
Battery disassembly and assembly 127
1. Disassembly 127
2. Inspection 127
3. Charging 127
Charging system inspection 127
1. Leakage test 127
2. Check the charging voltage 127
3. Inspection of magneto stator charging coil 128
10. Front fork assembly 129
Notice before service 129
Exploded view of the front fork assembly : 130
Exploded view of the steering wheel 130
Front fork exploded view 132
Lower connection board exploded view 133
Replace the steering wheel 134
1. Disassemble the handlebar assembly 134
2. Install the direction handle assembly 134
Replacement of Handlebar（ETC） 136
1、Disassembly of Handlebar Assembly 136
2、Installation of Handlebar Assembly 136
Replace the front wheel 137
1. Disassemble the front wheel assembly 137
2. Install the front wheel assembly 137
Exploded view of the front wheel assembly : 138
Front wheel assembly inspection and maintenance : 139
1. Disc brake 139
1.1 Service life of disc brakes 139
1.2 How to replace the disc brake 139
2. Front wheel oil seal and bearing 139
2.1 Service life of front wheel oil seal and bearing 139
2.2 How to replace the front wheel oil seal and bearing 139
3. Front wheel rim and tire 139
3.1 Service life of front wheel rim and tire 139
3.2 How to replace the front wheel rim and tire 139
3.3 Dynamic balancing 139

Replace the front shock absorber 140
1. Remove the front wheel and front fender assembly 140
2. Remove the left and right front shock absorbers 140
3. Reinstall the shock absorber, front fender, front wheel and other components 140
Replace the lower connecting board 141
1. Disassemble parts in advance 141
2. Remove the direction pad and upper connecting plate 141
3. Remove the lower connecting plate assembly 141
4. Install the lower connecting plate assembly 142
5. Install other disassembled components 142
11. Disassembly and assembly of vehicle covering parts 143
Removal of the hood 145
Removal of windshield instrument assembly 145
Disassembly of windshield instrument assembly 145
Removal of windshield lining 146
Removal of the upper rear trim cover 146
Removal of the head decoration 146
Removal of the fuel tank lock decorative cover and head side panel assembly 146
Removal of head lining and headlights 147
Removal of storage box 148
Removing the middle/left/right part of the fuel tank cover 148
Removing the left/right side cover of the fuel tank 149
Removing the pedal cover 149
Removing the middle/ lower /left/right parts of the fairing 150
Removal of left and right rear armrests 153
Rear cover assembly removal 153
Removal of tail light assembly 153
Rear camera assembly removal 153
Removal of the tail cover trim 153
Removal of rear fender assembly 154
Removal of rear fender assembly 154
Removal of rear cover lining 154

1. Vehicle Information

Notice before service

1、 You need to use good quality tools, or special tools and fixtures designed by our company. Using inferior tools may cause damage to parts, coating shedding, inadequate assembly, etc.

2、 O-rings, paper gaskets , copper gaskets, component sealing rings, etc. used for sealing must be replaced before assembly .

3、 with torque requirements need to use a torque wrench to check the torque; those without torque requirements refer to the general torque values recommended for general fasteners.

4、 It needs to be cleaned before assembly; after assembly, it needs to be checked whether the assembly is correct and in place.

5、 The vehicle should be parked in a balanced position, and attention should be paid to safety during disassembly and assembly, including but not limited to the use of electric tools, hand tools, pneumatic tools, hydraulic tools, and handling ; avoid contact with skin, eyes, burns, etc.

6、 Replaced oils, liquids, batteries, etc. must be collected and handed over to qualified institutions for disposal; it is prohibited to dump them at will to pollute the environment or water sources.

7、 Swallowing or inhaling coolant, brake fluid, etc. will cause certain harm to the human body. Wash hands, face and any exposed skin thoroughly after each addition. If swallowed, contact the poison control center or hospital immediately; if inhaled, go to a ventilated environment immediately. If accidentally splashed into the eyes, rinse the eyes immediately with plenty of running water and seek medical attention or treatment in time. Keep away from children and pets.

The things that need to be paid attention to and the basic requirements for preventing accidental injuries; it is impossible to list all situations in detail. Be sure to stay vigilant during the disassembly and assembly process to prevent accidents.

Motocyle body stickers

① Vehicle Identification Number VIN Located on the rear fender, near the rectifier, in the VIN style cover, the VIN code is engraved on the rear cross tube of the frame
② The storage box warning label is affixed to the rear of the storage box
③ The nameplate is located above the radiator
④ The engine identification code is engraved on the left crankcase
⑤ The muffler regulation code is on the inside of the muffler

Note : The nameplates, muffler regulatory codes and warning stickers for different displacements have different contents .

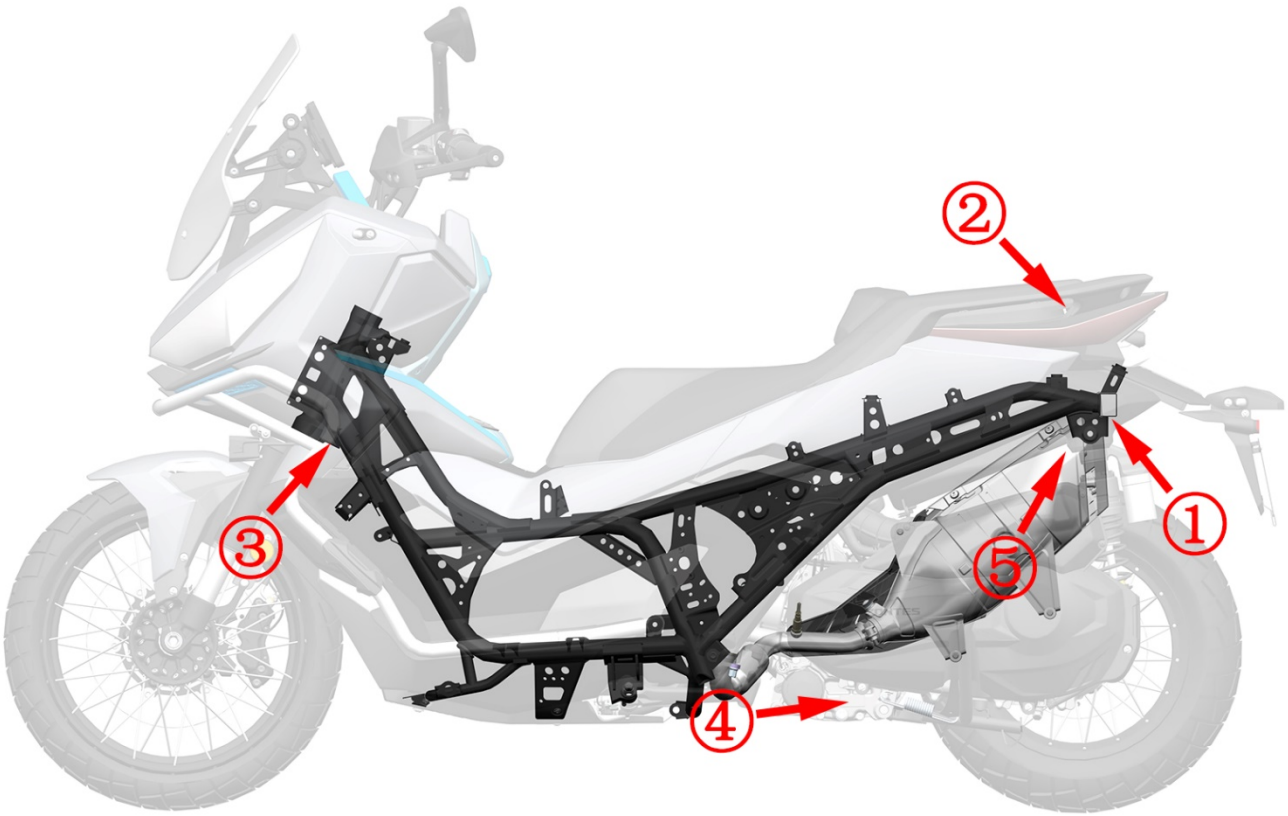

368G/368G(ETC) Technical Parameters

project		parameter	
Complete vehicle	Front tire	110/70—17	
	Rear tire	150/70—14	
	Front rim specifications	MT: 3.0 × 17	
	Rear rim specifications	MT: 4.2 5 × 14	
	Brake fluid	DOT4 0.25L (0.07 US gal,0.06 lmp gal)	
	Oil consumption	Replace the fine filter:	1.75L（0.46 US gal,0.39 lmp gal ）
		Without replacing the fine filter:	1. 55L (0.41 US gal, 0.34 lmp gal)
	Gearbox oil consumption	0.2L (0.05 US gal ,0.04 lmp gal)	
engine	Fuel	95 and above	
	Idle speed (r/min)	1600±100	
spark plug	Spark plug model	LMAR8A-9	
	gap	0.8 ～ 0.9mm(0.031 ～0.035 in)	
	Resistance (kΩ)	3 ~ 7.5	
Cooling system	Total coolant usage	1.54L (0.41 US gal,0.34 lmp gal)	
	Thermostat opening temperature	80～84℃(176 ～183.2 F)	
	Thermostat fully open temperature	95℃(203 F)	
	Thermostat opening stroke	≥3.5 mm (0.13 in)	
	Coolant Type	Ethylene glycol + distilled water	

Front wheel/steering system

project		standard	Limit value
Tread depth		-	≥1.6mm (0.063 in)
Standard tire pressure at normal temperature		230kPa (2.35 kgf/cm ^{2} , 33.4 PSI)	-
Front rim	Radial runout	-	1.5 mm (0.006 in)
	Axial runout	-	1.5 mm (0.006 in)

Rear wheel/suspension system

project		standard	Limit value
Tread depth		-	≥1.6mm (0.063 in)
Standard tire pressure at normal temperature		230kPa (2.35 kgf/cm ^{2} , 33.4 PSI)	-
Rear rim	Radial runout	-	1.5 mm (0.006 in)
	Axial runout	-	1.5 mm (0.006 in)
V- belts 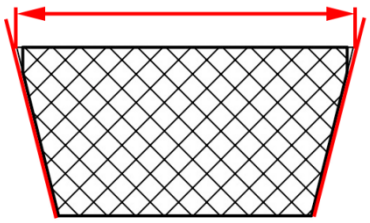	Top Width (1)	27.8mm (1.094 in)	≥ 26.8 mm (1.055 in)

Braking system

project		standard	Limit value
Front disc brake	Brake fluid	DOT4	-
	Brake pad usage limit	-	Bottom of the tank
	Brake disc thickness	≥ 5.0mm (0.197 in)	＜4.5mm (0.177 in)
Rear disc brake	Brake fluid	DOT4	-
	Brake pad usage limit	-	Bottom of the tank
	Brake disc thickness	≥4.5mm (0.177in)	＜4.0mm (0.157 in)

Battery/Charging System

project			standard
Battery	type		YTX12－BS
	capacity		12Ah
	Battery self-discharge current		1.1mA average
	Voltage	Fully charged	13.1 ～13.3V
		Charging voltage required when not installed	≤12.8 V
		voltage required for loading	≤12V
	Constant voltage charging mode	Constant pressure range	14.4 ~ 14.8V
		Initial charging current	0.1 to 0.2 times the battery capacity
		Charging time	6 to 24 hours
	Constant current charging mode	Maximum charging current	0.1 times the battery capacity
		Charging time	5 to 8 hours
		charging current × charging time must be controlled within the current range of 0.5 to 0.8 times the battery capacity.	

Lighting/Instrument/Switch Description

project			parameter
Lighting (LED)	Headlight	High beam	12V ~ 24W
		Low beam	12V ~ 17W
	Front fog lights		12V ~ 2 1W
	Front position lights		3.4W
	Rear position lights		1.8W
	Front turn signal		2.2W
	Rear turn signal		2.2W
	License plate light		0.4W
	Brake lights /tail lights		12V ~ 6.3W
	Storage compartment ambient lighting		0.2W
Insurance	Primary Insurance		40A
	ECM		15A
	ABS hydraulic control unit motor		15A
	Hydraulic control unit ECU		10A
	light		10A
	Constant power supply		15A
	spare		40A*1、15A*4、10A*7、1A*2
Water temperature sensor	Normal temperature		1.5 ～ 4.0KΩ

Tightening torque

Bolt tightening torque for general fastening parts

	4.8-6.8 grade (bolt head marked " 4 ")			8.8 grade (bolt head marked " 7 " or " 8.8 ")		
Bolt diameter	Tightening torque range	Standard value	Breaking torque	Tightening torque range	Standard value	Breaking torque
M4	1-2	1.4	/	1.5-3	2.5	/
M5	2-4	2.9	4.5	3-6	4.5	8
M6	4-7	4.9	10	8-12	10	14.5
M8	10-16	12.2	20	18-28	22	34
M10	22-25	24.5	45	40-60	44	76
M12	35-55	43	75	70-100	77	112
M14	50-80	69	123	110-160	124	200
M16	80-130	110	195	170-250	200	300
M18	130-190	150	285	200-280	270	450

Note: The tightening torque of plastic parts is half of the tightening torque of 6.8 grade bolts.

Cable/pipeline/electrical components distribution diagram

1. Lighting distribution map

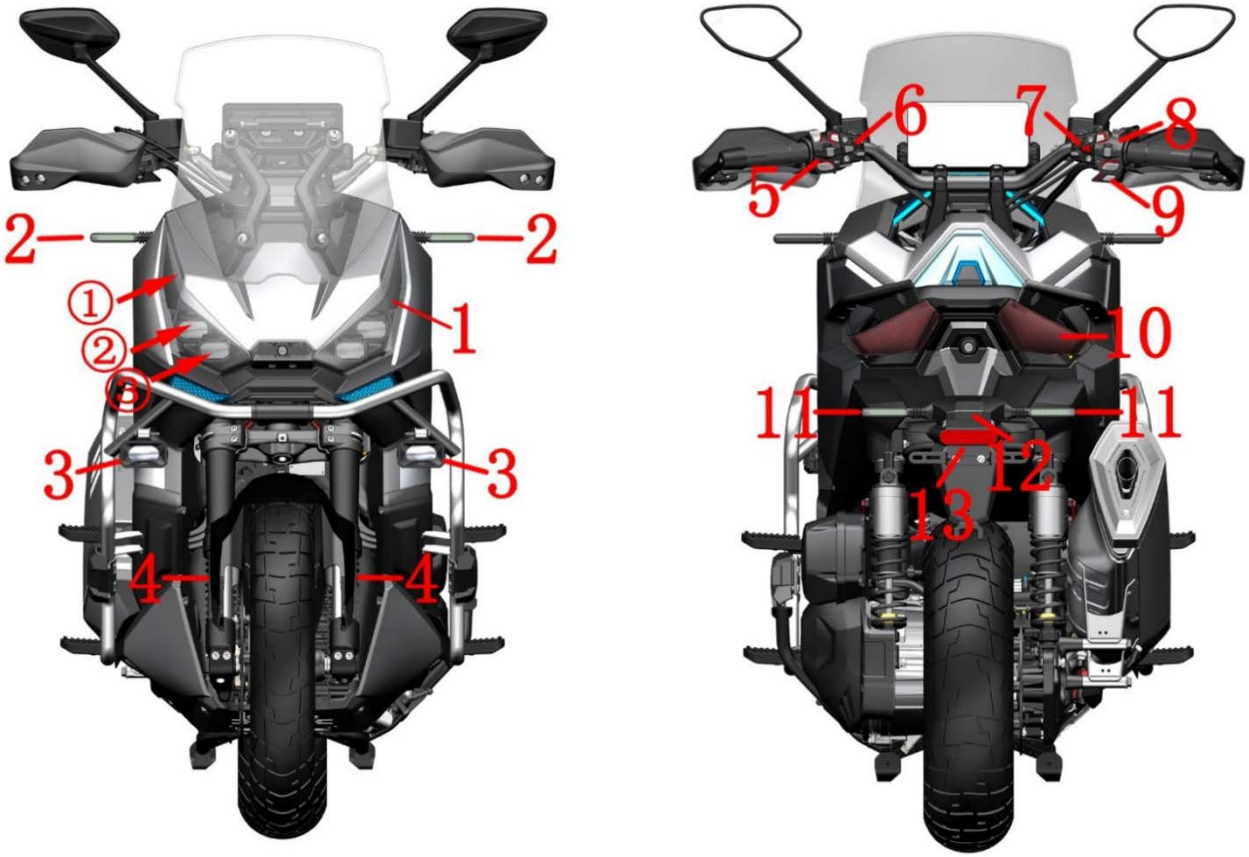

1- Headlight (①- Position light / daytime running light position ②- Low beam position ③- High beam position) 2- Front turn signal 3- Front fog light 4- Side reflector 5- Left handlebar switch 6- Left handlebar auxiliary switch 7- Right handlebar auxiliary switch 8- Right handlebar switch 9- Heated handlebar switch 10- Rear taillight 1 1- Rear turn signal 1 2- Rear license plate light 1 3- Rear reflector

2. Throttle cable(ETC witch out Throttle cable)



1- Throttle cable

3. Brake pump and brake oil pipe

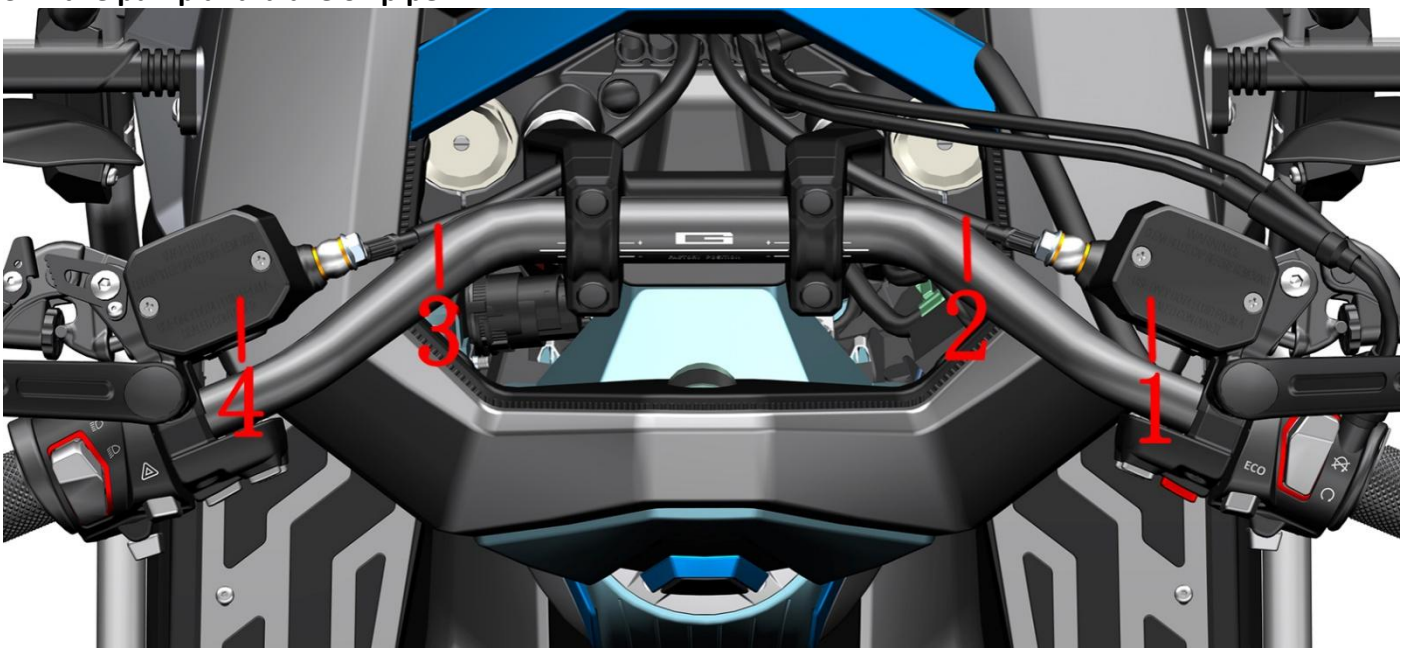

1-Front disc brake master cylinder 2-FMC-HU brake hose 3-RMC-HU brake hose 4-Rear disc brake master cylinder

4. Calipers, brake hoses and wheel speed sensors

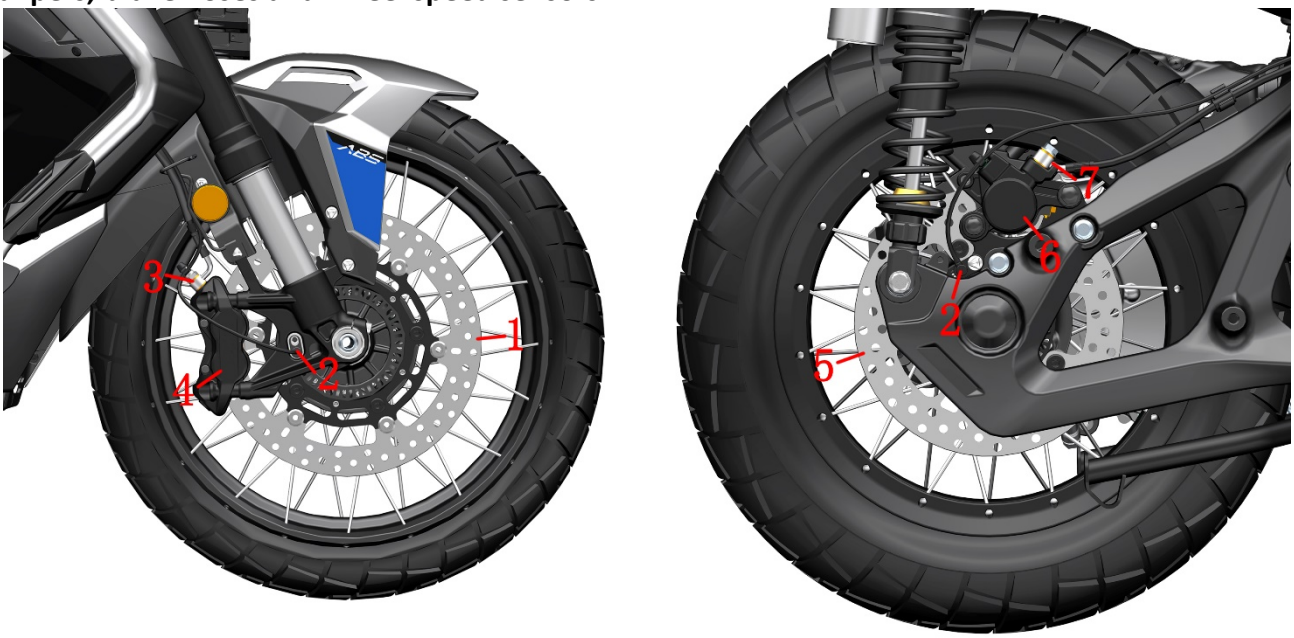

1 - Front brake disc 2 - Wheel speed sensor 3 -FC-HU brake hose 4 - Front disc brake calipers 5 - Rear brake disc 6 - Rear disc brake caliper 7 - RC-HU brake hose

5. Braking system parts distribution diagram

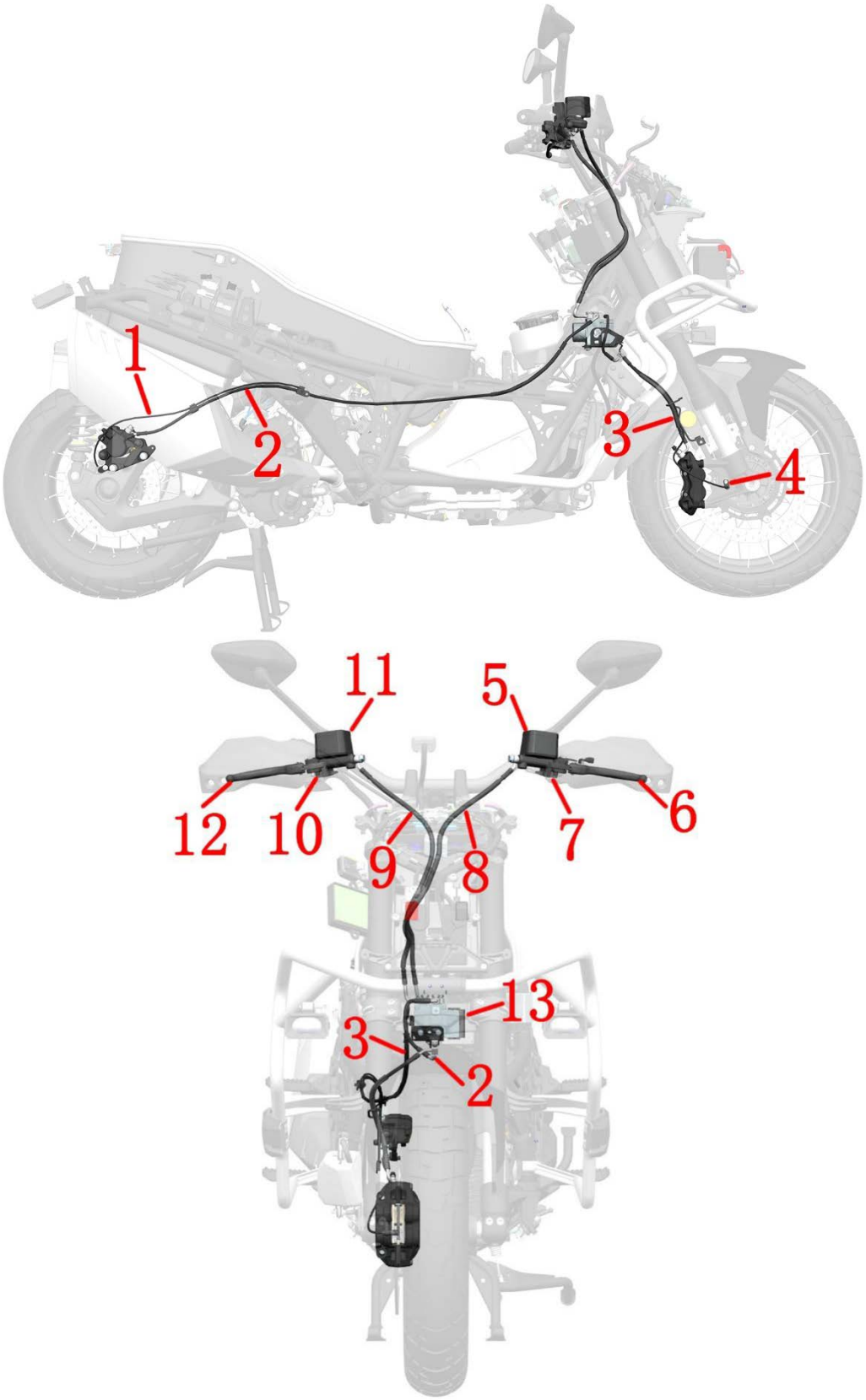

1- Wheel speed sensor (rear wheel) 2-FC-HU brake hose 3-RC-HU brake hose 4-Wheel speed sensor (front wheel) 5- Rear disc brake master cylinder 6 -Rear brake handle 7 -Rear brake switch 8-RMC-HU brake hose 9-FMC-HU brake hose 10 -Front brake switch 1 1 -Front disc brake master cylinder 12 -Front brake handle 13 - Hydraulic control unit

6. Oil supply system

6.1 Fuel evaporation

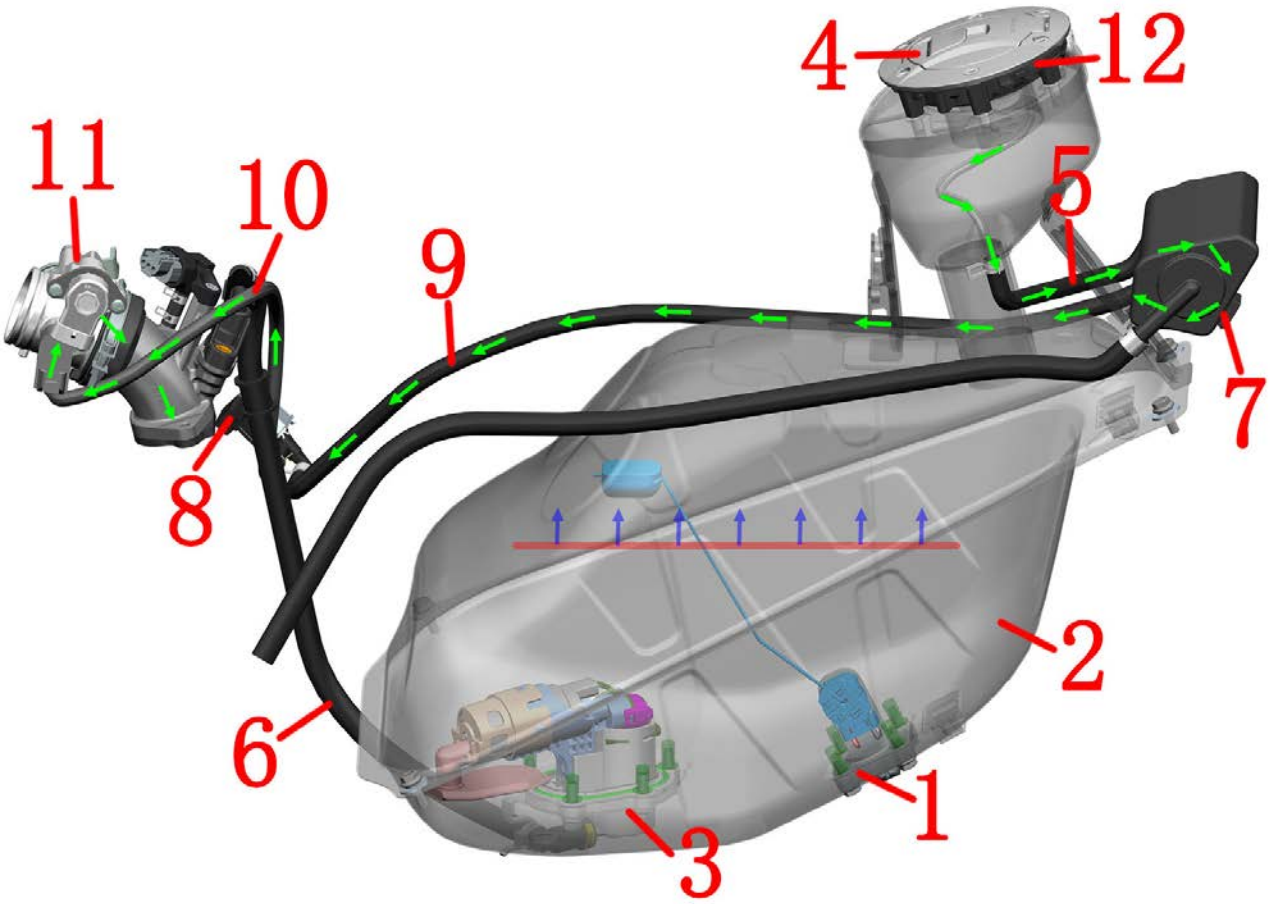

1 - Fuel level sensor 2 - Fuel tank 3 - Fuel pump 4 - Fuel tank cap 5 - Adsorption /vent pipe
6 - High pressure oil pipe 7 - Carbon canister 8 - Carbon canister solenoid valve
9 - Solenoid valve inlet pipe 10 - Solenoid valve outlet pipe 11 - Throttle valve body assembly

Fuel evaporation:
Oil and gas → adsorption /vent pipe → solenoid valve intake pipe → solenoid valve outlet pipe → throttle valve body assembly → intake manifold → cylinder

6.2 Fuel supply

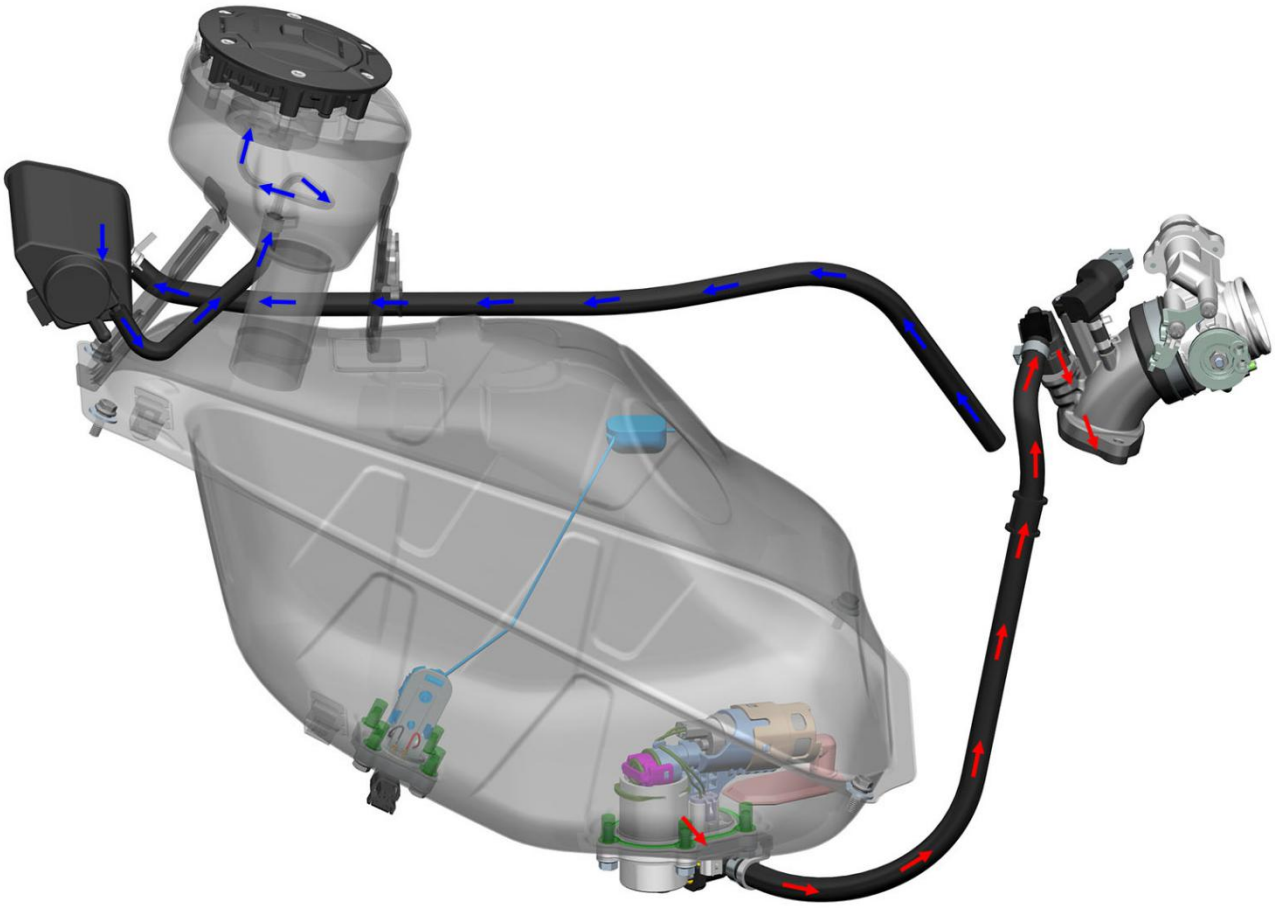

Oil supply system:
Air → Carbon canister → Adsorption /vent pipe
Fuel → fuel pump filter → fuel pump → high pressure fuel pipe → fuel injector → cylinder

7. Cooling system accessories distribution diagram

360G、250G：

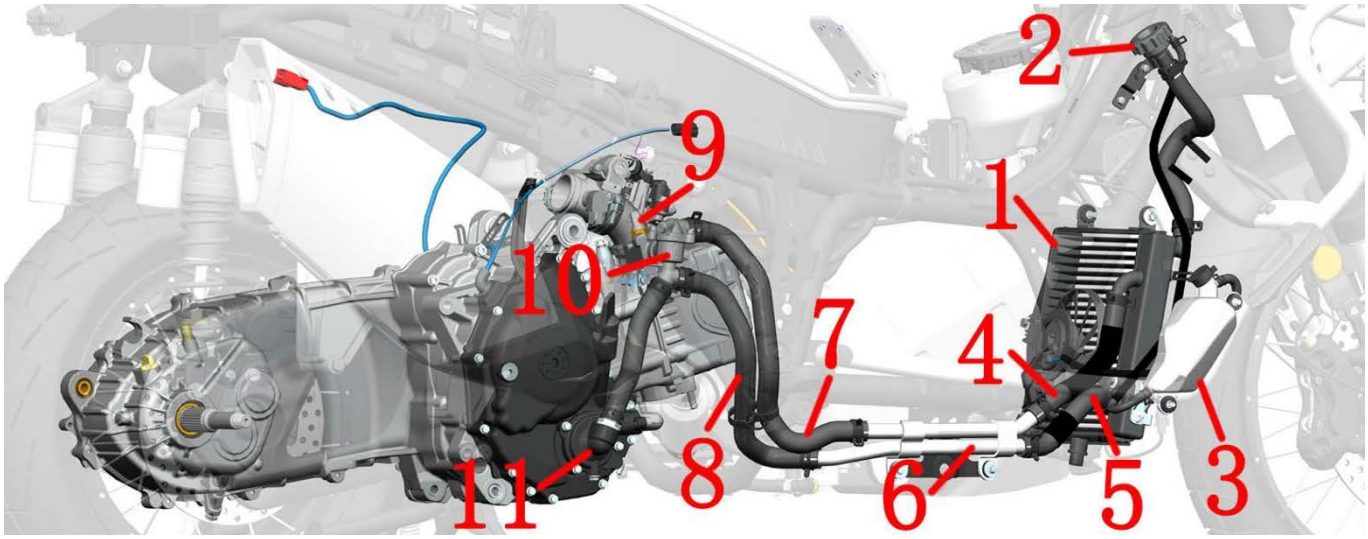

1 - Main water tank 2 - Water tank filling port 3 - Auxiliary water tank 4 - Main water tank inlet pipe 5 - Main water tank outlet pipe 6 - Aluminum water pipe 7 - Thermostat water outlet pipe 8 - Engine water inlet pipe 9 - Water and oil common sensor 10- Thermostat 11- Water pump cover assembly

368G ETC：

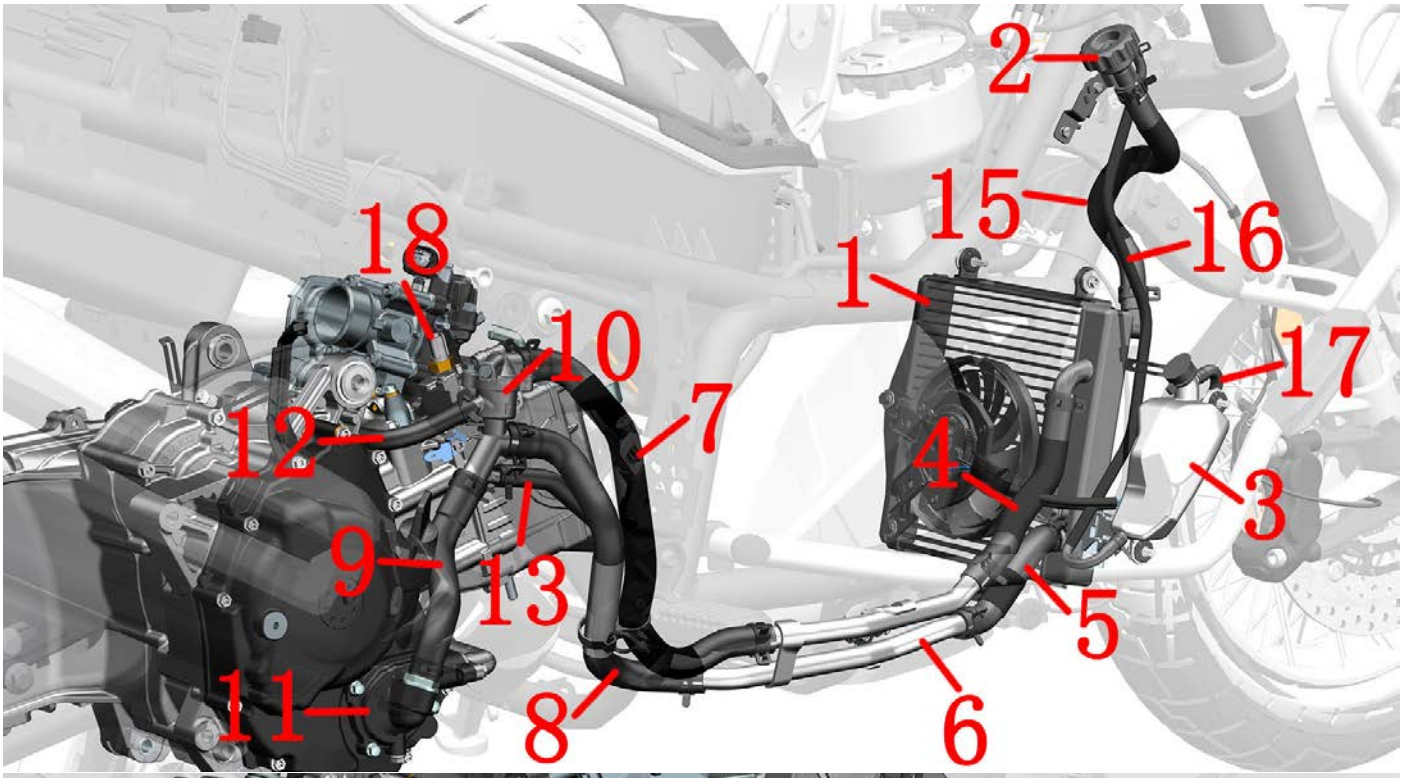

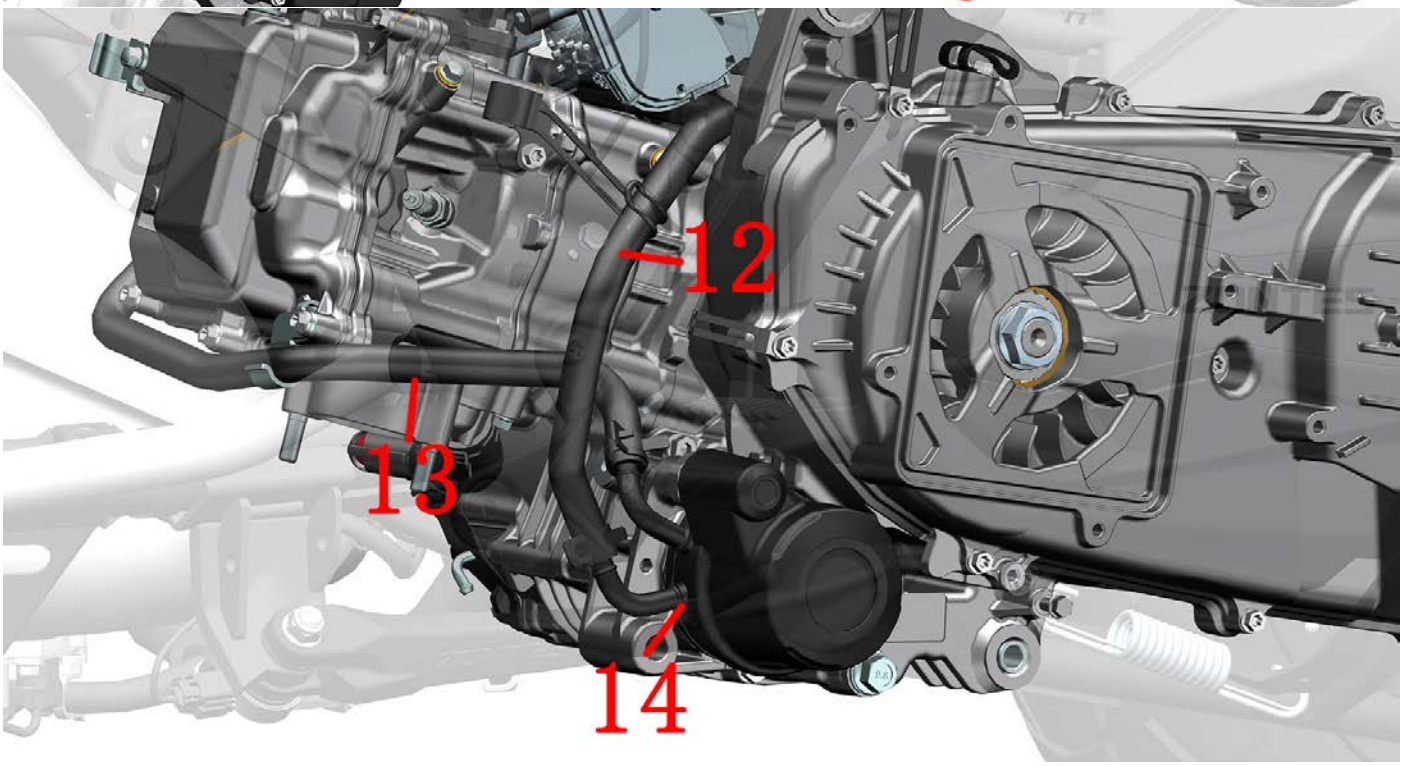

1- Main water tank 2- Main water tank filling port 3- Auxiliary water tank
4- Main water tank water inlet pipe 5- Main water tank outlet pipe 6- Aluminum water pipe
7- Thermostat water outlet pipe 8- Engine water pipe 9- Water pump cover water inlet pipe
10- Thermostat 11- Water pump cover assembly 12- Oil Cooler Water Inlet Pipe
13- Oil Cooler Water Outlet Pipe 14- Oil Cooler 15- water tank water inlet connection water pipe
16- auxiliary water tank connecting water pipe 17- Sub Water Tank Leak Pipe 18- communal sensor of water and oil

8. Electrical device layout diagram

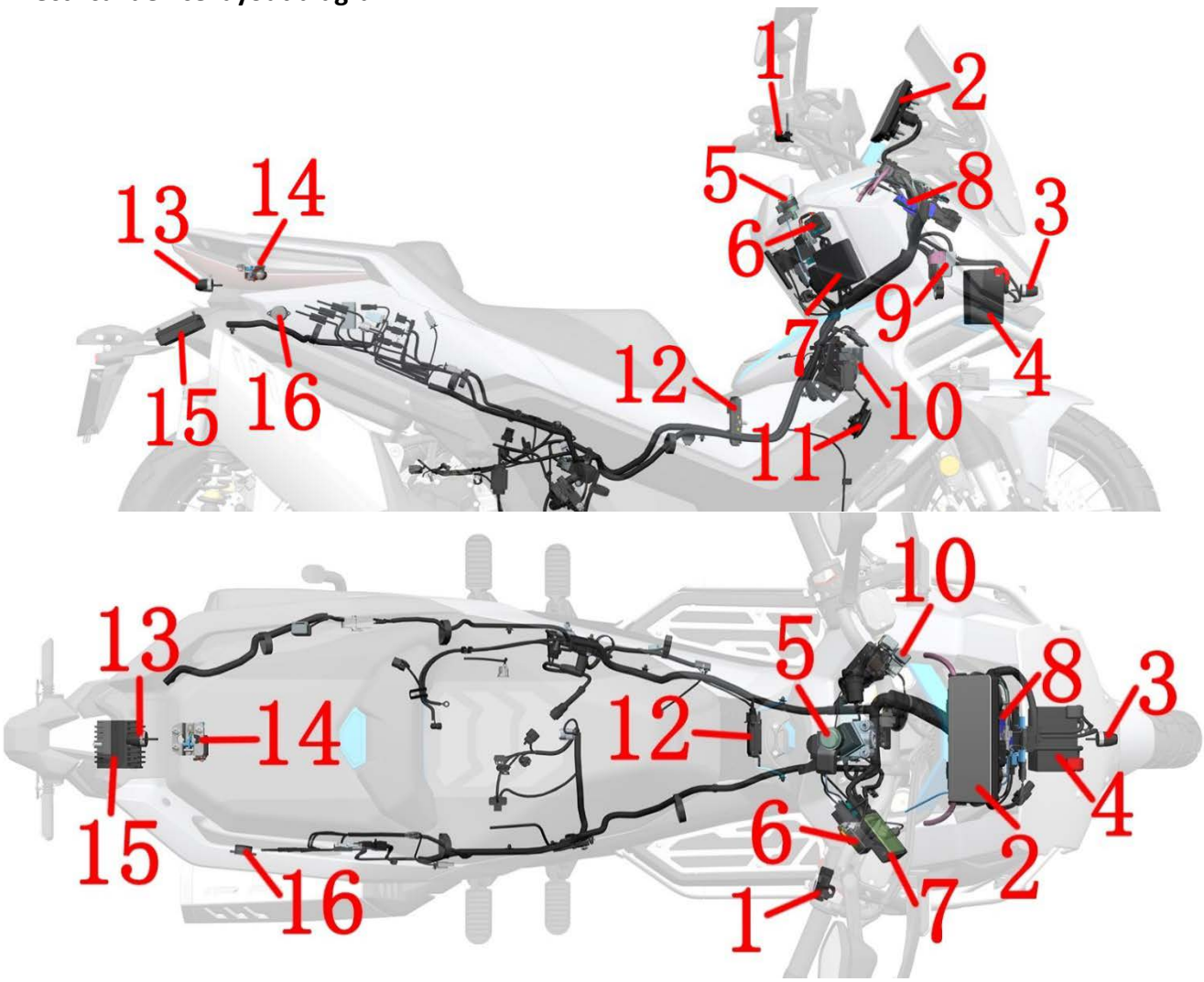

1- Electric heating handle switch 2 - TFT instrument 3 - Front camera 4 - Battery 5 - Flasher 6 - Charging port 7 - PKE host 8 - Engine controller (ECU) 9 - Start relay 10 - EFI relay 11 - Speaker 12 - Fog lamp drive box 13 - Rear camera 14 - Electronic seat lock 15 - Rectifier 16 - Buzzer

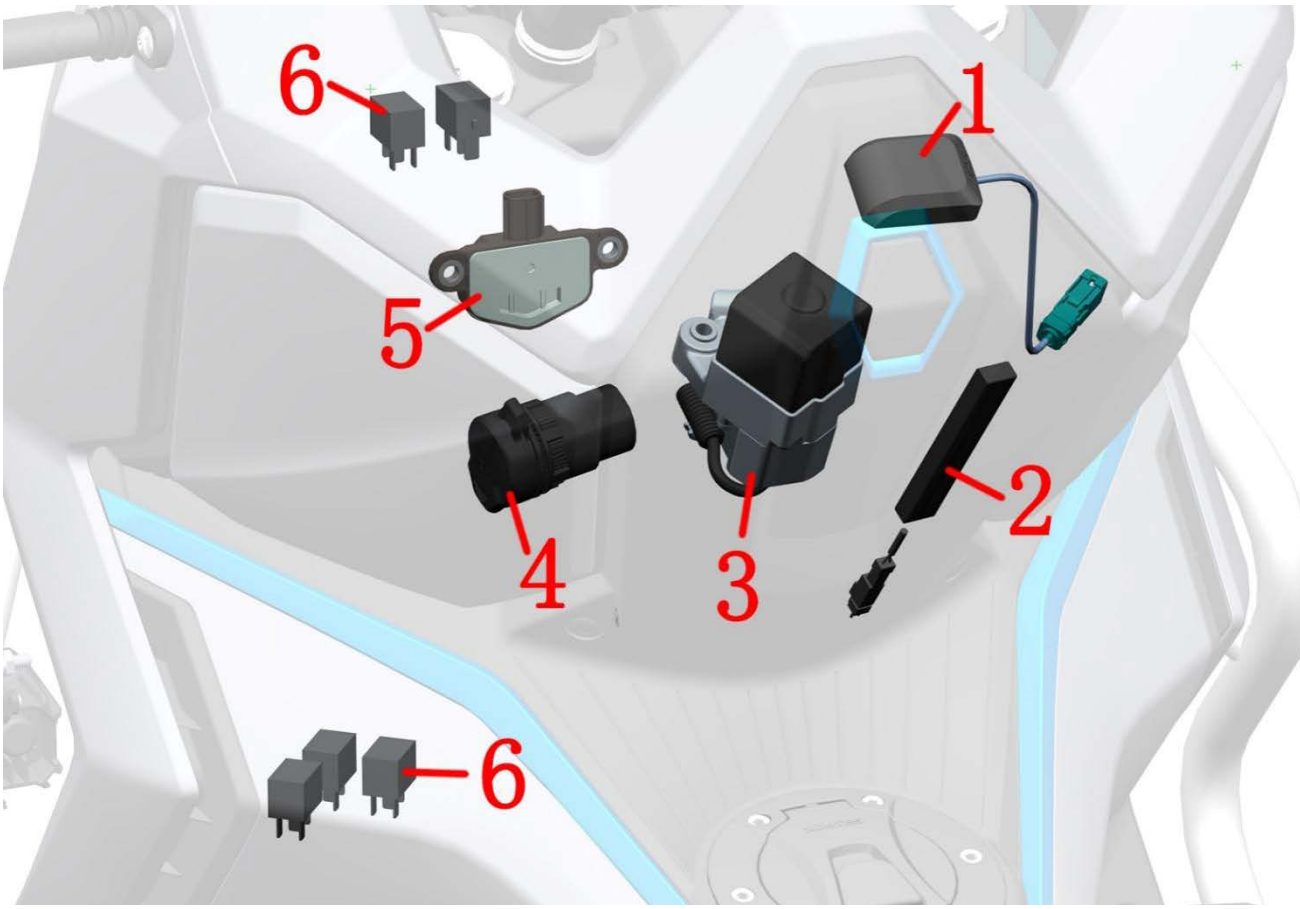

1-GPS antenna 2- PKE external antenna 3-Faucet lock 4-Dual-port universal USB charging cable 5-Dump switch 6-Electric injection rela

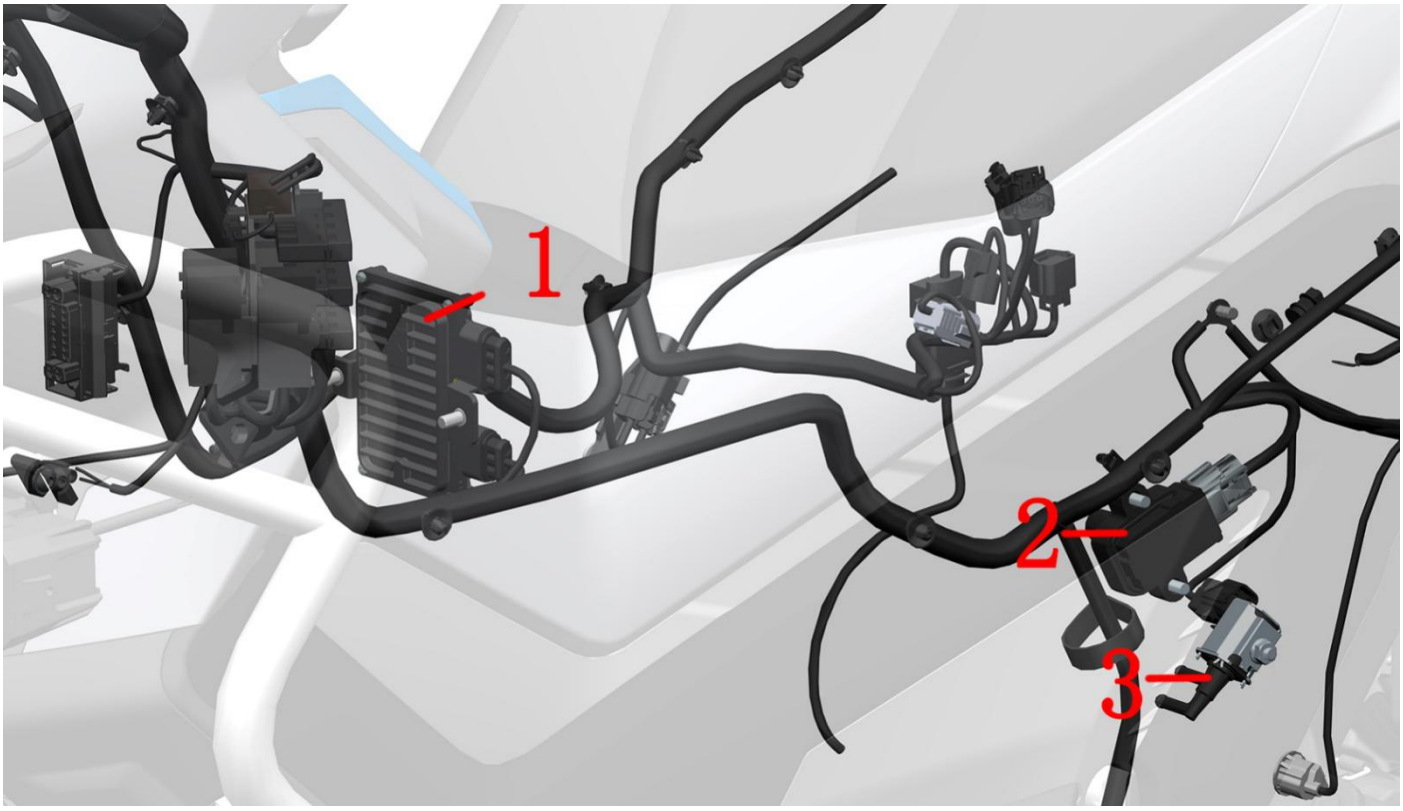

1 - Fog lamp drive box 2 - Ignition coil body 3 - Carbon canister solenoid valve

9. Intake and exhaust system

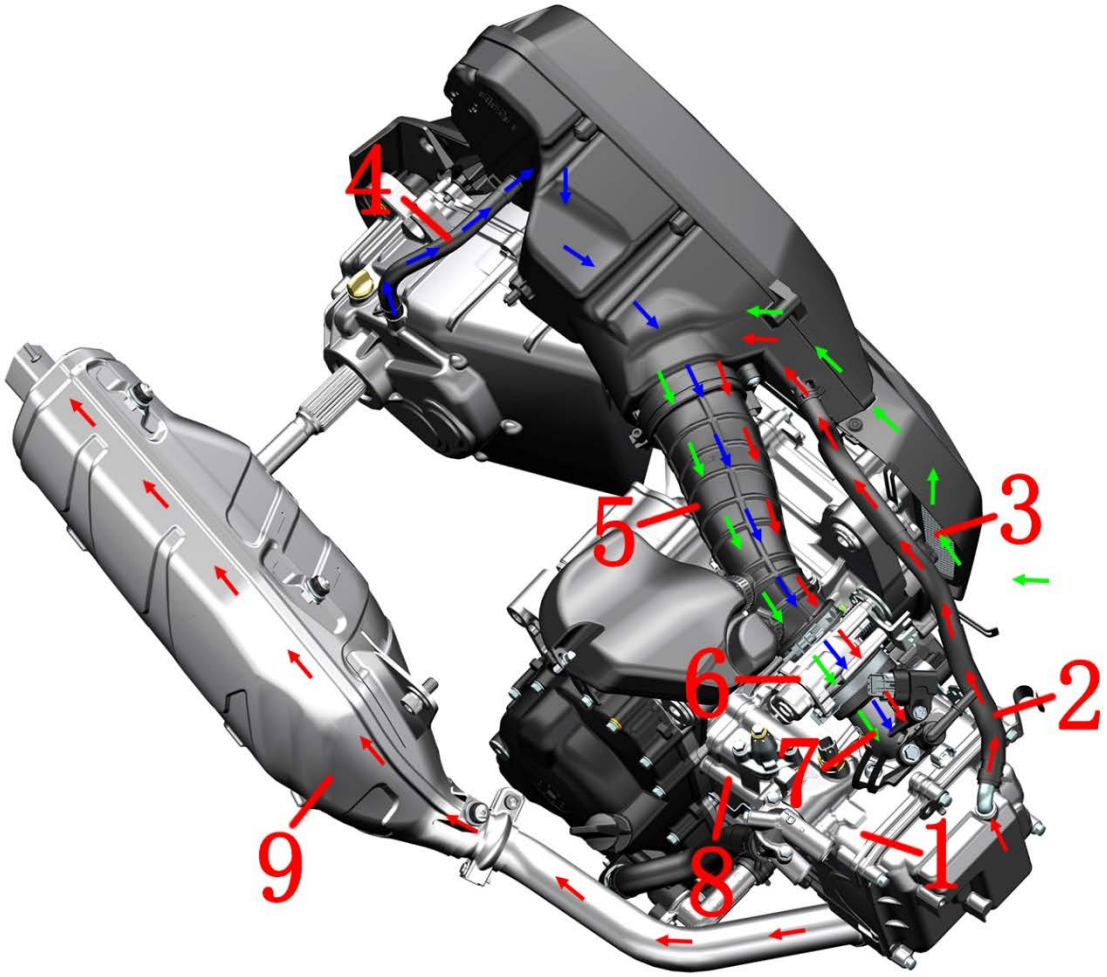

1 - cylinder head 2 - cylinder head exhaust pipe 3 - air filter inlet 4- Gearbox exhaust pipe
5- Air filter outlet pipe 6 - Throttle body assembly 7 - Intake manifold 8 - Cylinder 9 - Muffler

Intake system (indicated by green arrow) :
Air → air filter inlet → air filter element → air filter outlet pipe → throttle valve assembly → intake manifold → cylinder → muffler

Cylinder head exhaust gas control system (indicated by a small red arrow) :
Exhaust gas → cylinder head cover → cylinder head exhaust pipe → air filter → air filter outlet pipe → throttle valve body → intake manifold → cylinder → muffler

Gearbox exhaust gas control system (indicated by blue arrows):
Exhaust gas → gearbox exhaust pipe → air filter outlet pipe → throttle body → intake manifold → cylinder → muffler

Tool

			
125 piece tool set	Torque wrench	Vehicle Tools	Claw hammer
			
Pull code	Rubber hammer	Dynamic balancing machine	Tire Changing Machine
			
Oil pan	Measuring cup	funnel	Taps and dies
			
Micrometer	Depth gauge	Vernier caliper	Feeler gauge
			
Tire pressure gauge	Magnetic seat + dial indicator	PT300 EFI diagnostic instrument (16PIN)	17# Hexagon socket

			
Clamp pliers	Internal circlip pliers	External circlip pliers	Clamp Multimeter
			
multimeter	Blow gun	14-sided 65mm cap filter wrench (for replacing the fine filter of M350)	T45/50 plum socket with hole
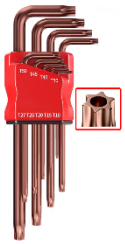			
T25/ 45/50 plum wrench with hole			
Some of the above pictures are from the Internet, and the copyright belongs to the original author. Please do not use them for other purposes.			

Expansion nail description

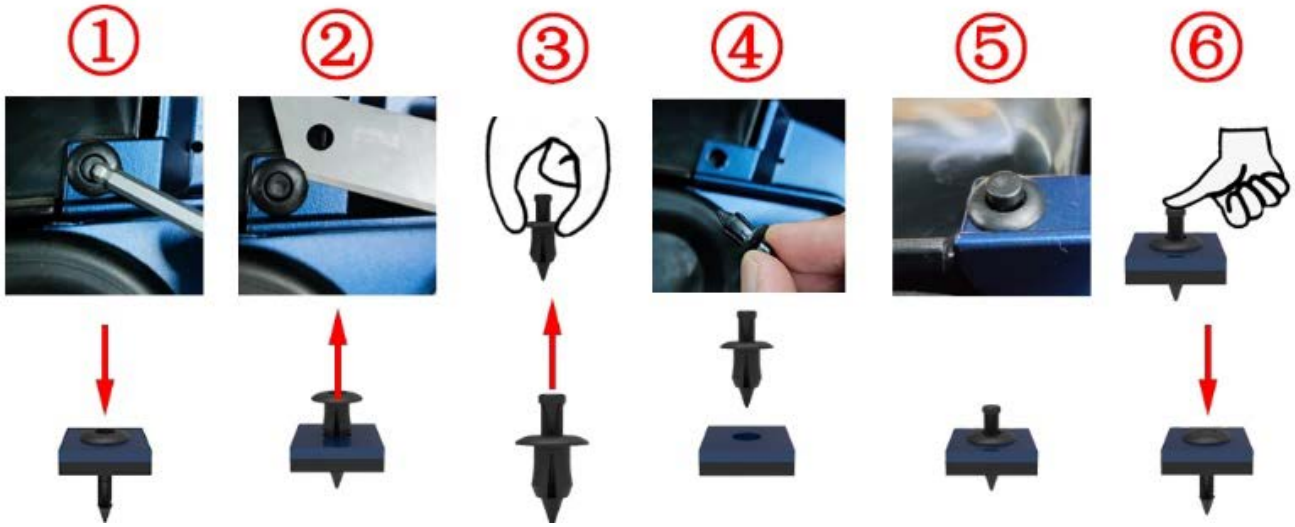

① Use a 4# hexagon socket or other tools to press the center cylinder. You can hear a sound or the center cylinder moves 2mm axially.
② Use a blade, fingernail or carving knife to pry open the gap and remove it. If space permits, you can reach out to the back and push it out.
③ Pinch the outer ring with two fingers and push the center cylinder up to the initial position.
④ Pinch the center cylinder with two fingers and install the expansion nail to the installation position.
⑤ The outer ring fits the connected parts. If not, check whether it is misaligned.
⑥ Press the center cylinder with your fingers or other tools. You can hear a sound or the top of the center cylinder is basically flush with the top surface of the outer ring, indicating that the assembly is in place.

2. Maintenance

Notice before service

1. Use high-quality tools or special tools and fixtures designed by our company. Using inferior tools may cause damage to parts, coating shedding, inadequate assembly , etc.
2. O-rings , paper gaskets , copper gaskets, component sealing rings, etc. used for sealing must be replaced before assembly .
3. For fasteners with torque requirements, a torque wrench should be used to check the torque; for those without torque requirements, refer to the general torque values recommended for general fasteners .
4. Clean before assembly ; check whether the assembly is correct and in place after assembly.
5. The vehicle should be parked in a balanced position and attention should be paid to safety during disassembly and assembly. This includes but is not limited to the use of electric tools , hand tools, pneumatic tools, hydraulic tools, and handling . Avoid contact with skin, eyes, burns , electric shock, etc.
6. All types of replaced oils, liquids , batteries , etc. must be collected and handed over to qualified institutions for disposal; it is prohibited to dump them at will to pollute the environment or water sources.
7. Swallowing or inhaling coolant , brake fluid, etc. will cause certain harm to the human body. Wash hands, face and any exposed skin thoroughly after each addition. If swallowed by mistake, contact the poison control center or hospital immediately; if inhaled, go to a ventilated environment immediately. If accidentally splashed into the eyes, rinse the eyes immediately with plenty of running water and seek medical attention or treatment in time. Keep away from children and pets.
8. If you need to clean or wash the body parts of this vehicle, you should use neutral motorcycle wash liquid or tap water or diesel, kerosene, etc. Acidic or alkaline motorcycle wash liquids will cause irreversible corrosion to the paint, electroplated surface, anodized surface, etc. on the surface of the parts ; gasoline will cause premature aging or hardening of sealants, gaskets , rubber parts, etc., reducing the service life . Use non-woven cloth without residue for wiping. Ordinary rags may have cloth scraps or wool left , which may affect assembly or cause other adverse effects.
9. The following are instructions for disassembly and assembly of expansion nails.
10. If there is a “  ” symbol on the right side of the step , you can click it to quickly jump to the corresponding step.

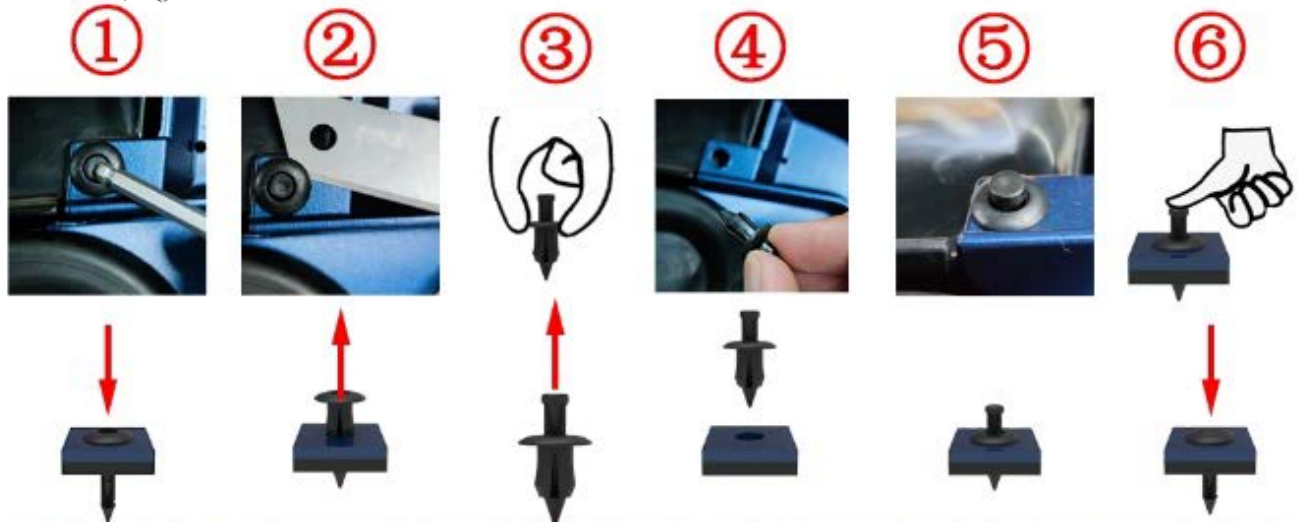

① Use a 4# hexagon socket or other tool to press the center cylinder. You can hear a sound or the center cylinder moves 2mm (0.079 in) axially.
② Use a blade, fingernail or carving knife to pry open the gap and remove it. If space allows, you can reach out to the back and push it out.
③ Pinch the outer ring with two fingers and push the center cylinder up to the initial position.
④ Pinch the center cylinder with two fingers and install the expansion nail to the installation position.
⑤ The outer ring fits the connected parts. If not, check whether it is misaligned.
⑥ Press the center cylinder with your fingers or other tools. You can hear a sound or the top of the center cylinder is basically flush with the top surface of the outer ring, indicating that it is assembled in place.

the things that need to be paid attention to and the basic requirements for preventing accidental injuries ; it is impossible to list all situations in detail . Be sure to stay vigilant during the disassembly and assembly process to prevent accidents.

Maintenance cycle table-368G、250G

I: Check (clean, lubricate, adjust or replace if necessary) R: Replacement T : Tightening ★:annotation

Inspection items	drive inspection	Frequency* 1						Regular replacement (inspection)
		× 1000 km	1	4	8	12	16	
		× 1000 mile	0.6	2.5	5	7.5	10	
Cradle cushion rubber					I		I	1 year or 10,000 km (6214 miles) Check once
Air filter (filter element)				I	R	I	R	
Engine air inlet filter			R	R	R	R	R	★Note 2
Muffler bolts and nuts			T		T	T	T	
** spark plug					I		I	
Engine oil	I		R	R	R	R	R	Note 1
Oil Filter			R		R		R	
* Throttle body			I		I			
* Throttle cable clearance			I	I	I	I	I	2.0～4.0mm
Idle			I	I	I	I	I	
* Fuel evaporative pollutant control system					I			
Radiator pipe			I	I	I	I	I	
* Fuel pipe				I				Check for leaks
V- belts							R	Replace every 2 years
** Braking system				I	I	I	I	
Brake hose					I		I	Check for leaks
Brake fluid				I				Replace every 2 years
** Tire/Whell bearing	I		I	I	I	I	I	
** Bolts and nuts in steering mechanisms			T	T	T	T	T	
Steering bearings in steering mechanisms				I	I	I	I	
Front shock absorber	I				I		I	
** Rear shock absorber	I				I		I	
* Internal mechanism of faucet lock								
** Bolts and nuts for body and engine mounting			T	T	I	T	I	
Engine suspension				I	I			
Coolant	I		I	I	I	I	I	3 years or 30,000 kilometers (18,641 miles)
Gearbox oil			R		R		R	
** Valve clearance (cold check) Inlet: 0.08 ~ 0.12mm (0.003 ~ 0.005 in) Outlet: 0.18 ~ 0.22mm (0.007 ~ 0.009 in)			Check and adjust every 20,000 km (12,427 miles)					
Driving wheel, driven wheel					I		I	Note 2
Rim spokes	I		I	I	I	I	I	
Muffler anti-scalding plate buffer rubber			I	I	I	I	I	
Air filter oil pipe			I	I	I	I	I	
** Vehicle fasteners、bolts、nuts	I				I		I	
Brake pad wear	I		I	I	I	I	I	
** Windshield assembly	I							
Fuel level	I							
** Oil seals and bushings for wheels and sprocket seats				I	I	I	I	
Main Bracket				I	I	I	I	Clean and lubricate every 6000 kilometers

* This service is provided by dealers or qualified repair organizations , and can be performed by the owner if the owner has the

appropriate tools , service information and a certain understanding of mechanics .
**For safety reasons, such items should be provided by dealers or qualified maintenance organizations .
Note 1: The first maintenance is carried out after 1000 kilometers (621 miles) or 3 months (whichever comes first). The second maintenance is carried out when the actual mileage on the instrument reaches 4000 kilometers (2485 miles) . Thereafter, regular maintenance is carried out every 4000 kilometers (2485 miles) or 15 months (whichever comes first).
Note 2: It is recommended to use Shell Gadus S3 V220 C2 extreme pressure grease or high temperature resistant No.2 grease of the same viscosity for maintenance and lubrication of the driving wheel and driven wheel bushing every 10,000 kilometers (6,214 miles) to ensure riding comfort. Transmission system : If the driving speed is found to be significantly reduced, it is recommended to maintain and inspect the CVT transmission system at any time and replace it in advance if necessary.

Maintenance cycle table（ETC）

I: Check (clean, lubricate, adjust or replace if necessary) R: Replacement T : Tightening ★:annotation

Inspection Item	Inspect before driving	Service Interval*1						Regular replacement(Inspect)
		×1000km	1	6	12	18	24	
		×1000mile	0.6	3.7	7.4	11.1	15	
Swingarm Buffer Rubber			I	I	I	I	I	Replace at 30,000 km
Air Cleaner Element				I	R	I	R	★Note 2
Engine Air Intake Filter			I	R	R	R	R	★Note 2
Muffler Bolts&Nuts			T		T	T	T	
** Spark Plug				I	R	I	R	
Engine Oil	I		R	R	R	R	R	★Note 1
Oil Filter			R		R		R	
* Throttle Body			I		I			
* Free Angle of Throttle Grip			I	I	I	I	I	Free angle:±0.5°
Idle Speed			I	I	I	I	I	Check before operation
*EVAP evaporative emission control system					I			
Radiator Pipe			I	I	I	I	I	
* Fuel Line				I				Check for leakage
V-Belt								Every 2 years or 20,000 km (12,428 miles)
** Brake System				I	I	I	I	Check fluid level in reservoir
Brake Hoses				I				Check for leakage
Brake Fluid				I				Replace every 2 years
** Tires	I		I	I	I	I	I	Check tire pressure and tread wear
** Bolts&Nuts on Steering Mechanism			T	T	T	T	T	
** Steering Bearings on Steering Mechanism				I	I	I	I	Re-grease every 15,000 km
**Front Shock Absorber	I				I		R	★Note 9
** Rear Shock Absorber	I				I		I	Check for leakage
Internal Mechanism of Dragon Head Lock								★Note 3
** Bolts&Nuts on Frame and Engine			T	T	T	T	T	
Engine Mounting				I	I			
Coolant	I		I	I	I	I	I	Every 3 years or 30,000 km (18,641 miles)
Gear Oil			R	R	R	R	R	
** Valve Clearance (Cold Check) Intake：0.08 ~ 0.12mm(0.003 ~ 0.005 in)Exhaust：0.18 ~ 0.22mm(0.007 ~ 0.009 in)			Inspect and Adjust every 20,000 km (12,427 miles)					★Note 8
Drive Pulley & Driven Pulley					I		I	★Note 5-6
Wheel Rim Spokes	I		I	I				Check for bending
Muffler anti-scalding plate Buffer Rubber			I	I	I	I	I	★Note 4
Air Cleaner Drain Tube			I	I	I	I	I	
** Vehicle Fasteners, Bolts, Nuts	I				I		I	
** Brake Pad Wear	I		I	I	I	I	I	
** Windshield Assembly	I							
Fuel Level	I							
** Wheels, Rear Swingarm Bushings and Oil Seals				I	I	I	I	★Note 7
Drive Pulley & Driven Pulley					I		I	★Note 5-6
Wheel Rim Spokes	I		I	I				Check spokes for bending
Muffler Heat Shield Buffer Rubber			I	I	I	I	I	★Note 4
Air Cleaner Drain Tube			I	I	I	I	I	
Wheels, Rear Swingarm Bushings and Oil Seals				I	I	I	I	★Note 7

Electronic Seat Lock, Electronic Fuel Tank Lock								Clean and lubricate every 4,000 km
Main Bracket				I	I	I	I	Clean and lubricate every 6000 kilometers

*Service to be provided by an authorized dealer or qualified repair units. lf the owner has suitable tools, service information, and a certain understanding of the machinery, they can implement it themselves.

**For safety reasons, this item must be serviced by an authorized dealer or qualified repair units.

★Note 1：The first maintenance should be carried out after the first 1,000 km (621 miles) or 3 months (whichever comes first). The second maintenance should be carried out when the actual mileage of the instrument reaches 6,000 km (3,726 miles). Subsequently, regular maintenance should be carried out every 6,000 km (3,726 miles) or 15 months (whichever comes first).

★Note 2：If driving under severe conditions (e.g., damp, dusty environments), significantly increase preventive maintenance frequency and shorten regular service intervals to ensure vehicle reliability and service life.

★Note 3：Inspect, clean, and lubricate every 10,000 km (6,214 miles). For detailed maintenance operations, please refer to the official website's "Dragon Head Lock Maintenance Video".

★Note 4：If the motorcycle is hit by external force or the muffler and anti-scalding plate is scraped while reversing, the first step is to carefully inspect the appearance, the stability of the installation points, and whether the muffler buffer rubber has deformed. Also, inspect if there is any air leakage when the engine is at idle speed. Internal abnormal noise or severe appearance damage usually require replacement, and the suspension ears, brackets, buffer rubber, bolts, and damaged parts involved must be replaced before continuing to ride.

★Note 5：①Drive&Driven Pulley Bushings: Maintain and lubricate every 10,000 km (6,214 miles) using Shell Gadus S3 V220 C2 extreme pressure grease or high-temperature resistant No.2 grease of the same viscosity to ensure riding comfort.②Transmission System: lf there is a significant decrease in driving speed, it is recommended to maintain and inspect the CVT transmission system at any time, and replace it in advance if necessary.

★Note 6：The warranty for CVT system failure caused by quality issues of parts is 1 year or 6,000 km, and any warranty beyond one of them will be invalid. The normal wear and tear of parts generated during vehicle use is not within the scope of the three guarantees, and sensory phenomena that do not affect mechanical performance, such as sound and vibration, are not within the scope of the three guarantees.

★Note 7: Inspect the oil seal lip for wear. Apply grease if necessary.

★Note 8: Valve Clearance (with engine cold) Intake: 0.08 ~ 0.12mm, Exhaust:0.18 ~ 0.22mm.

★Note 9：Maintain the shock absorbers every 20,000 km (12,000 miles) by replacing oil seals, dust seals, and damping fluid.

DANGER

● Initial maintenance should be performed strictly according to the above table, otherwise it may cause vehicle damage or other unpredictable failures.
● To keep your vehicle running normally, it is recommended that you have it serviced by a dealer or a qualified repair unit . Improper maintenance or care may cause vehicle damage or other unforeseen failures.
● Replacing unqualified parts will cause your vehicle to wear out faster and shorten its service life.
●When checking brake discs, mufflers, spark plugs, coolant, etc., wait until they have cooled down before proceeding.
●When replacing brake fluid and coolant, pay attention to protection to avoid contact with skin and eyes and cause harm. At the same time, avoid dripping onto the surface of parts and damaging the paint or surface.

CAUTION

● Waste generated during maintenance , such as cleaning agents, waste oil , etc., should be properly handled and are prohibited from being dumped at will to avoid causing environmental pollution.
● The items listed above are for normal use . If the product is often used in harsh environments, the frequency of maintenance should be increased .
●The steering system, braking system, electronic fuel injection system, shock absorbers and wheels are all key components and it is recommended that they are repaired by a qualified maintenance unit.

Air filter (filter element) , air inlet filter element

step :

1. Support the vehicle firmly

Prop the vehicle up on the main stand as shown .



2. Remove the left engine cover

a. Use a 4 # hexagon socket to press down the center cylindrical pin of the expansion nail on the inside of the air filter decorative cover , and then remove the expansion nail .

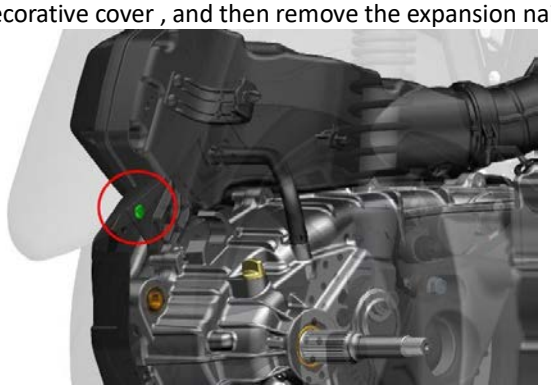

b . Use T30 plum wrench with hole to remove the small flange bolt M6×16 or use 4# hexagon socket remove the M6×14 shoulder bolts shown in the figure . The bolt here cannot be removed for the time being, so just loosen it completely.

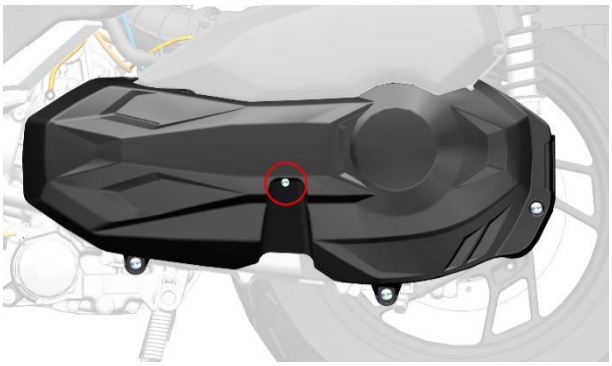

c . Use a 8 # sleeve or T30 plum wrench with hole to remove the three small flange bolt M6×16+flaning bushing+buffer rubber,be careful not lose flanging bushing and buffer rubber. or use 4# hexagon socket remove the three M6×14 shoulder bolts shown in the figure . Use a 4 # hexagon socket to press down the center cylindrical pin of the expansion screw of the air filter decorative cover , and then remove the expansion screw . Remove the decorative cover.

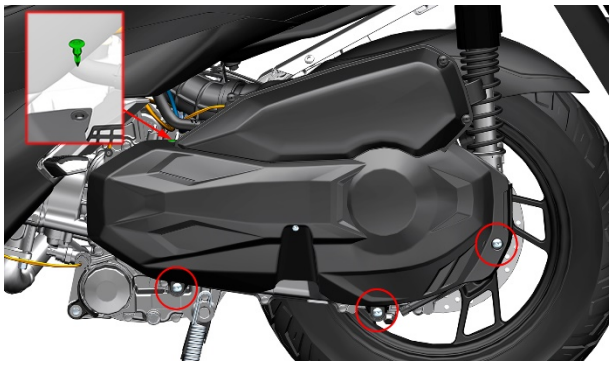

3. Replace the air inlet filter

a. Use a Phillips screwdriver to remove the five self-tapping screws that come with the intake sponge filter assembly. After removing the front cover, take out the intake sponge. After replacing it with a new sponge, reinstall the front cover, ensuring that the screws are installed vertically and that the torque is not excessive.

Model 24: The air inlet sponge filter element should be replaced every 8,000 kilometers (4,971 miles).

ETC: The intake sponge filter element should be replaced every 12,000 kilometers (7,456 miles).

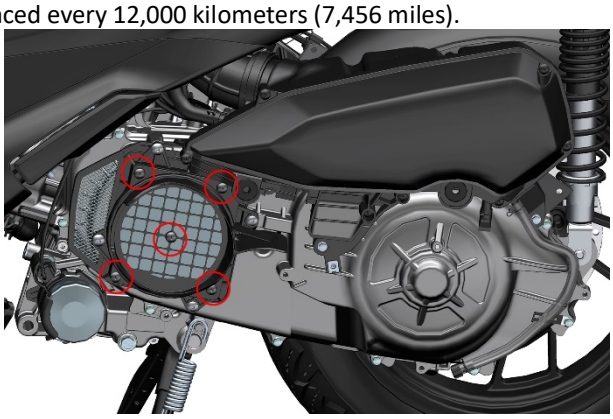

b . Remove the sponge and replace the new filter element, with the black side facing the engine and the white side facing outwards .



4. Remove the air filter housing

a. Use a Phillips screwdriver to remove the 10 self-tapping screws.

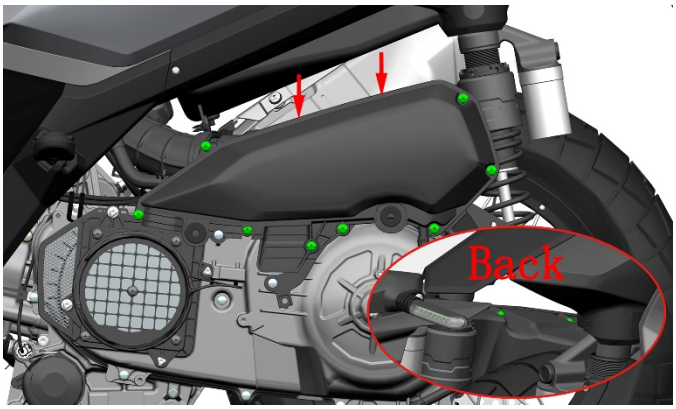

b. Remove the air filter housing.

5. Replace the air filter element

a. Take out the air filter element assembly.

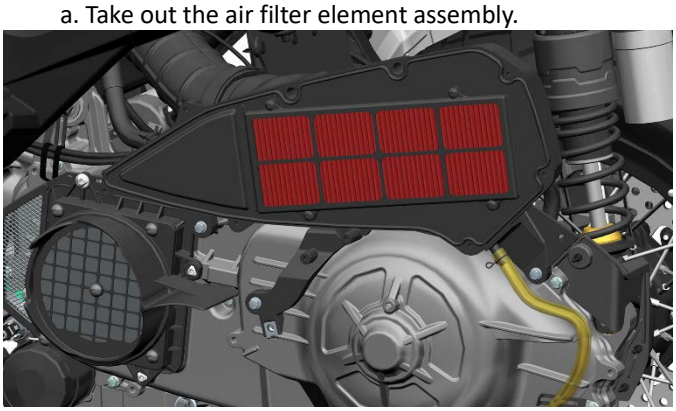

b. Remove the old air filter element. Use a dust gun to blow away the dust inside the intake pipe and then wipe the inner wall clean with a clean non-woven cloth.

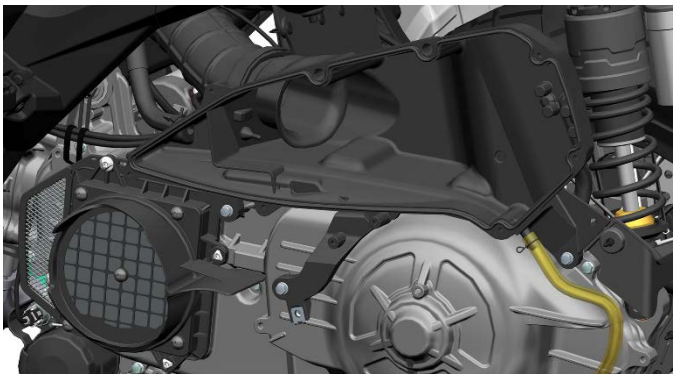

c. Replace the filter element and sealing strip with a new one .

d. Model 24: Replace the air filter element every 8,000 kilometers (4,971 miles).

ETC: The air filter element should be replaced every 12,000 kilometers (7,456 miles).

6. Check the air filter waste oil pipe

Observe whether there is dirt or water accumulation in the waste oil drain pipe . If there is, use pliers to remove the waste oil pipe clamp ① and then pull out the black plug , and reinstall it after draining the waste oil or sewage. Note that when the air humidity is high, the inspection frequency should be appropriately increased. If there is too much dirt in the hose, be sure to check whether there is too much dirt or damage in the air filter element , and replace the air filter element if necessary .

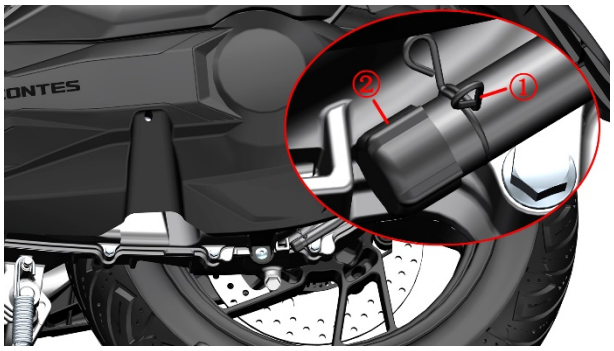

7. Reinstallation

Reinstall according to the disassembly steps.

DANGER

● The vehicle must be parked on a flat, stable ground or a lift.

WARNING

● Model 24: Check the air filter element every 4,000 km (2,485 miles) or 15 months, whichever comes first, and replace it every 8,000 km (4,971 miles) or 30 months, whichever comes first. Replace the intake sponge filter element every 8,000 km (4,971 miles) or 30 months, whichever comes first.
● ETC: Replace the air filter element every 12,000 kilometers (7,456 miles). Replace the intake sponge filter element every 12,000 kilometers (7,456 miles).
● The air filter element and engine air inlet filter element should be cleaned regularly according to the regular maintenance and lubrication table.
● If you often ride in humid or dusty areas, you should inspect the air filter element more frequently. Be sure to check the air filter waste oil pipe frequently.
●If the filter element is damaged, it must be replaced, otherwise the dirt will flow into the engine and cause engine damage.
● Make sure the filter element is properly assembled.

CAUTION

●If the air filter is clogged with dust, the intake resistance will increase and the output power will decrease.
●If the engine air inlet filter is clogged with dust, the air intake resistance will increase, which will reduce the heat dissipation of the belt and affect the life of the belt.
● If the replacement cycle has not yet arrived, and the filter element is not damaged and the surface is relatively clean , you can use a dust blower to blow air from the clean side of the filter element to blow away the dust on the filter element surface .
Do not allow water to enter the air filter when washing the vehicle .

Muffler bolts and nuts

1、 Check for leaks at the engine exhaust.

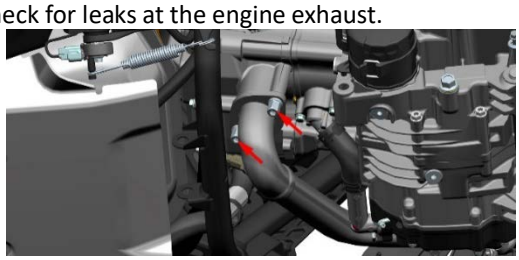

a. If there is a slight air leak, try to tighten the exhaust port nut with a 6 # hexagon socket; if the problem is not solved, remove the muffler and replace the engine exhaust port gasket with a new one.

b. If there is no sign of leakage, use a 6 # hexagon socket to check whether the M8 nut at the engine exhaust port is loose(torque 25±2N.m).

c. Remove the muffler anti-scalding plate if necessary.

368G:

1、Use a T25 Torx socket to remove the five M6×16 bolts on the muffler. Remove the front, middle, and rear parts of the heat shield. (If only the rear section of the muffler needs to be removed, this step can be skipped.)

2、Use an 8# hexagon socket to remove the M10 bolt securing the upper part of the muffler, and use a 14# socket to remove the two M10 bolts at the bottom(torque 53±2N.m). Use a T45 slotted Torx wrench to remove the M8 bolt on the inside (6# hexagon socket for early models) (torque 25±2N.m), loosen the clamp, and the rear section of the muffler can be removed.

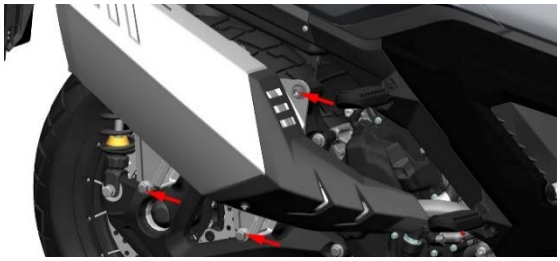

250G、ETC:

1、Use a T25 Torx socket wrench to remove the 7 M6×16 bolts on the muffler. Remove the front and rear parts of the heat shield. (If only the rear section of the muffler needs to be removed, this step can be skipped.)

2、Use a 13# socket to remove 2 M10 bolts (torque: 53±2 N.m), use a T45 slotted Torx wrench to remove the inner M8 bolt (6# hexagon socket in early models) (torque 25±2 N.m), and after loosening the clamp, the rear section of the muffler can be removed.

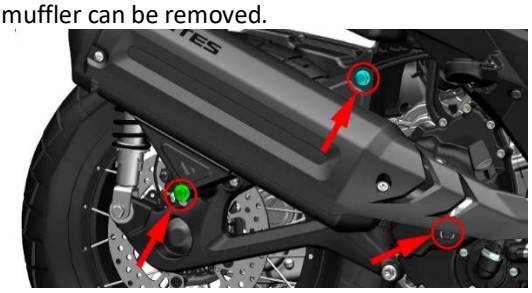

DANGER

● Do not touch any metal surface of the muffler when the engine is running or after riding to prevent burns.

● The vehicle must be parked on a flat, stable ground or a lift.

● If you need to replace the exhaust port gasket with a new one, you must wait until the muffler is completely cooled before starting the operation.

WARNING

●Never stand still for a long time while stepping on the accelerator.

● Long-term low-speed driving with heavy load may damage the engine and muffler.

●It is prohibited to use leaded gasoline to avoid catalyst failure and loss of exhaust purification ability.

CAUTION

● If you need to remove the muffler for other operations, it is recommended to cover the muffler air inlet and outlet holes with masking paper to prevent foreign matter from entering.



●Keep the drainage holes at the bottom of the muffler unobstructed to prevent condensed water from accumulating inside the muffler chamber .

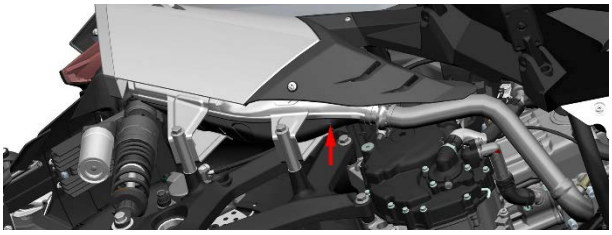

● Oil, dirt and other stains on the surface of the muffler should be cleaned promptly .

Spark Plug

Attention：

●Before disassembly, use a dust blower gun to blow clean the dust and other debris around the spark plug.

●After removing the spark plug, it is necessary to prevent foreign objects from falling into the engine。

1、Remove the spark plug

a. The spark plug position is as shown in the figure.



b. Use a dust blower gun to blow clean the dust, debris, etc. near the spark plug.

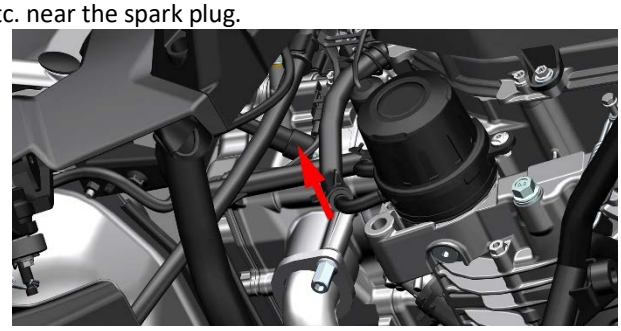

c. Pull out the ignition coil high voltage cap.

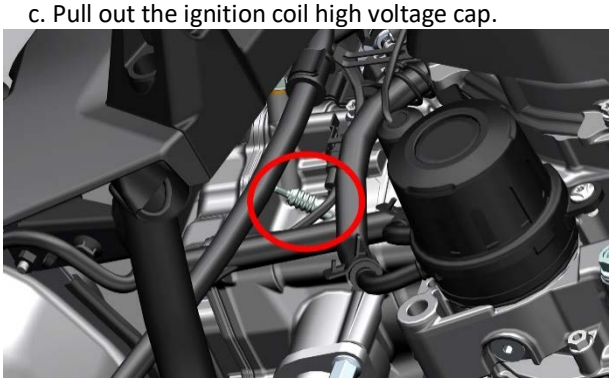

d. Use the vehicle's built-in tool or a dedicated 14# spark plug socket to rotate counterclockwise to remove the spark plug.

e. It is recommended to seal the spark plug installation holes with masking tape or other soft plastic bags to prevent foreign objects from entering the engine.

2、Check the spark plug

a. Check whether the insulator has cracks or damage, and whether the center electrode has wear, fouling, corrosion, excessive carbon deposition, or discoloration (the color of the ceramic insulator around the center electrode of the spark plug should be light brown). If so, a new spark plug needs to be replaced.。

b. Clean the electrodes with a special spark plug cleaner. Use a hard wire or steel needle to remove the attached carbon deposits.

c. Check the gap between the center electrode and the side electrode with a feeler gauge.



d. If necessary, the gap can be adjusted by bending the side electrodes, and pay attention to the force during adjustment.

e. Clean the surface and mating surface of the spark plug washer thoroughly, and wipe off the dirt on the threads.

f. First, manually screw it back onto the engine, then use a tool to rotate it clockwise until it reaches the standard torque.

Spark plug model: LMAR8A-9

Resistance value between the terminal screw and the center electrode: 3 - 7.5 kΩ

Clearance: 0.8-0.9mm (0.031-0.035 in)

Torque： 14N.m(1.4kgf.m,10 lbf.ft)

Engine oil

DANGER

● The vehicle must be parked on a flat, stable ground or a lift.
● Wait until the engine and muffler have cooled down before operating.
When adding engine oil, prevent the oil from dripping onto the surface of the muffler.
● Keep engine oil away from children and pets. Short-term contact with engine oil may irritate the skin. Please wear long-sleeved clothes or sleeves and anti-shake gloves before changing the oil. If you accidentally get engine oil on your skin, clean it thoroughly with soapy water.
●The used engine oil must be collected and handed over to professional organizations for proper disposal. It is prohibited to dump it at will, pour it into the trash can or pour it directly onto the ground.

WARNING

● The engine oil and gearbox oil should be replaced according to the periodic table specified in the instruction manual .
●You need to purchase regular and qualified engine oil. Inferior engine oil will aggravate engine wear, and in severe cases it will cause engine failure and shorten its service life.
● The amount of engine oil should meet the requirements. Too much or too little may cause engine damage.

CAUTION

●The copper gasket and combined sealing gasket need to be replaced after removal; it is recommended to replace both the O-ring and the sealing gasket.
●The O-ring must be assembled in place to avoid cutting edges .
● After removing the oil dipstick and oil filler nut, prevent foreign matter from falling into the engine.

1. Drain the engine oil

a. Start the vehicle, let it idle for 3-5 minutes, then shut it off for 3-5 minutes (when the temperature is below 10℃ (50F), the idling time should be extended appropriately) .

b. Use the main stand to park the vehicle securely.

c. Rotate the dipstick（1） on the right side of the engine counterclockwise and remove the dipstick（1） and O-ring（2）. Leave the dipstick on the fuel filler port without removing it to prevent foreign matter from falling into the engine.

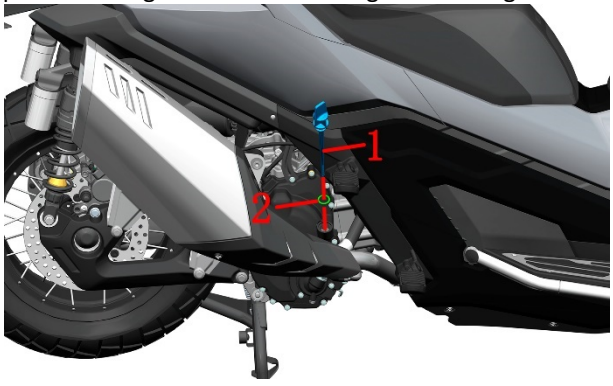

d. Place an oil pan under the drain bolt and use a 14# socket to remove the M12×1.5×15 drain bolt（3） and the 12×ϕ20×2 combined sealing gasket（4） .

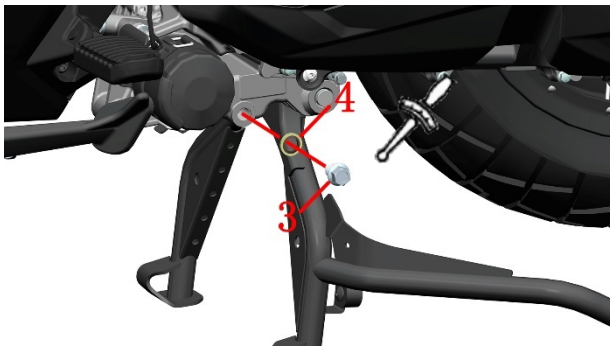

e. Wipe the joint surface clean with non-woven cloth. Check whether the joint surface of the drain bolt（3） is scratched; if so, replace it with a new one, otherwise wipe it clean.

f. Replace the new combined seal gasket（4）, and use a 14# sleeve to install the drain bolt（3） and the combined seal gasket（4） back to the engine case. Torque: 25 Nm (2.6 kgf.m, 18 lbf.ft).

2. Replace the fine filter

368G、250G:

Untie the battery strap（6） that secures the filter guard（5）, and remove the filter guard（5）. Note: When installing, the limit column of the filter guard needs to be installed into the corresponding limit hole of the engine.

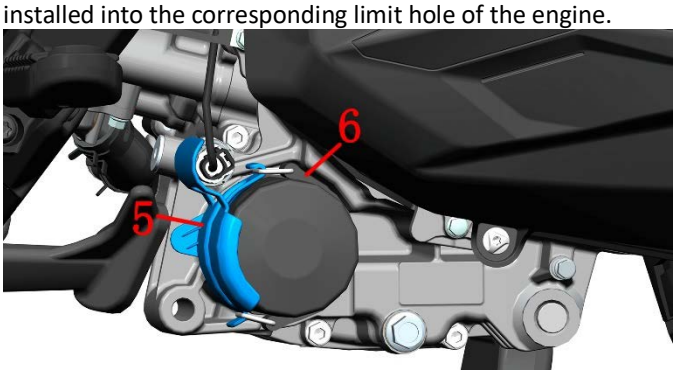

368G、250G

368G ETC:

Use a T25 hexagonal wrench to remove the seven M6×14 bolts on the muffler, Remove the Oil filter guard plate。（ETC）

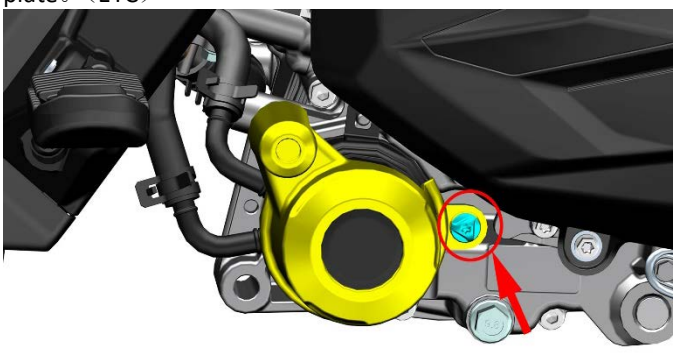

ETC

b. Place the oil pan under the fine filter cover, and use a 14-sided 65mm cap filter wrench +1/2" (12.5mm) ratchet wrench to remove the fine filter by rotating it counterclockwise. The filter wrench model of SATA is 97401. Replace it every 1000 kilometers or 3 months (whichever comes first) for the first time, and then every 4000 kilometers or 15 months (whichever comes first).



c. Drain the oil in the fine filter.



d. Use a clean non-woven cloth to wipe off the residual oil and impurities on the engine.

e. Apply a layer of engine oil to the new fine filter seal and install it on the engine. Torque: 20 N.m (2 kgf.m , 15 lbf.ft).

Be careful not to miss the sealing ring, and check whether the sealing ring surface is damaged, hardened or other defects before assembly .



3. Add engine oil

a. If you replace the filter element, use a measuring cup to fill 1.75L (1.85 US qt, 1.54 lmp qt, 0.46 US gal, 0.39 lmp gal) of a new API SN grade or higher motorcycle-specific engine with a viscosity of SAE5W-40/10W-40/10W-50. If you do not replace the filter element, use a measuring cup to fill 1.55L (1.64 US qt, 1.36 lmp qt, 0.41 US gal, 0.34 lmp gal).

b. Remove the oil dipstick and use a funnel and measuring cup to add oil to the oil filling port on the right crankcase cover of the engine.



c. Clean the fuel filler port with a non woven cloth.

d. Check whether the O-ring (2) is damaged or aged. If not, clean it. If so, replace it. The specification of the O-ring used for the oil dipstick is: 18×3×3.5.

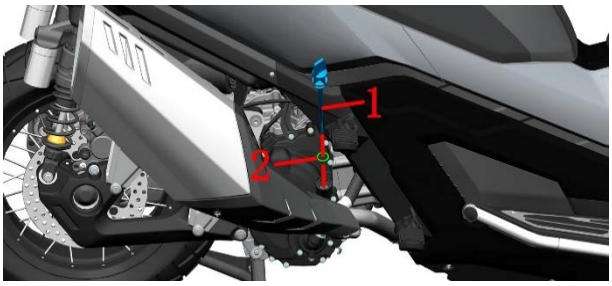

e. Wipe the oil dipstick clean, and install the oil dipstick (1) and O-ring (2) back to the right crankcase cover of the engine by rotating them clockwise by hand.

4. Replace gearbox oil

a. Rotate the oil filler nut (1) counterclockwise and remove the nut (1) and O-ring (2). The specification of the O-ring used for the oil filler nut is: 13.8×2.5. Place the nut (1) on the oil filler port without removing it to prevent foreign matter from falling into the engine.

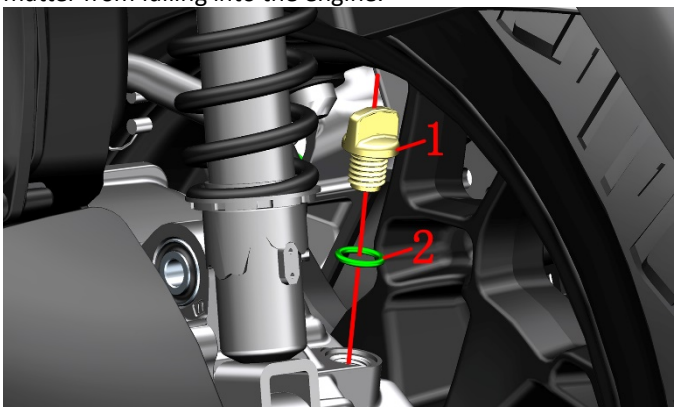

b. Place the oil pan under the rear of the left engine. For the ETC model, use a 10# socket; for the early 24 model, use a 14# socket, and the currently produced models use a 10# socket; loosen the oil drain bolt (3) counterclockwise .

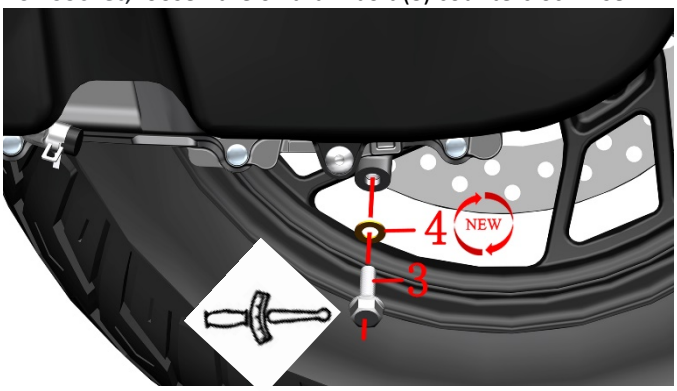

c. Remove the M8×25 drain bolt (3) and 8.3×16×1.5 copper gasket (4).

d. After the gearbox oil is completely drained, wipe the surface of the oil drain port clean with a non-woven cloth.

e. Replace the new copper gasket (4), check whether there are any scratches on the joint surface of the oil drain bolt (3), if not, wipe it clean and reinstall it in order. Torque: 20 Nm (2 kgf.m , 15 lbf.ft) .

f. Use a measuring cup to fill with 0.2L of engine oil or gearbox oil (0.21 US qt, 0.18 lmp qt, 0.05 US gal, 0.04 lmp gal).

g. Check whether the O-ring (4) is damaged or aged. If not, wipe it clean; if so, replace it.

h. Clean the nut (3) and the oil filling port with a non woven cloth, first insert the O-ring (4) into the nut (3) and then rotate it clockwise by hand to install it back to the oil filling port of the gear box .

5. Confirm the oil level

a. Start the vehicle and run it at idle speed for a few minutes, then check all disassembled locations for leaks. If found, check for leaks.

b. After the engine has been idling for 5 minutes, turn it off for 3 minutes and check whether the engine oil level meets the standard. If not, drain the oil or add it to the standard.



Throttle body

Notice:

●The throttle valve body sensor and stepper motor cannot be immersed in any liquid.

●It is prohibited to adjust the idle speed adjustment screw on the valve body.

●368G 、250G、368G(ETC)are basically the same,you can refer to the steps for the 368G。

1. Clean carbon deposits without removing the throttle valve body

a. During riding, increase the throttle appropriately to increase the speed to above 7000 without affecting safety and complying with traffic regulations, and continue riding for at least 2 minutes. High-speed scavenging can effectively remove carbon deposits.

b. Use a regular and qualified fuel saver to add fuel according to the instructions. Frequent use may cause damage to the fuel supply pipeline.

2. Remove the stepper motor and clean the carbon deposits

a . Remove the rear storage box according to the " Z T368T-G Rear Storage Box Disassembly and Assembly Video Tutorial" in the assembly video of ZONTES official website .

b. Unplug the stepper motor ① and sensor ②.

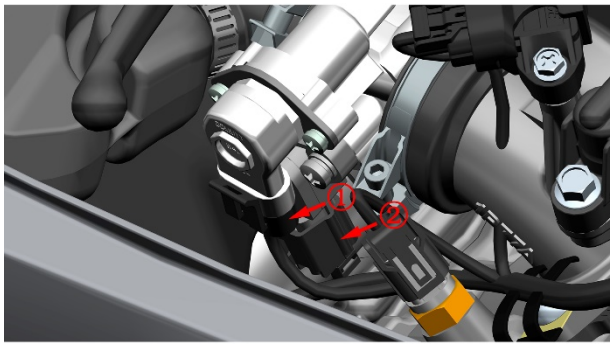

c. Use a short Phillips screwdriver to remove the two bolts and anti-drop card that come with the throttle valve body assembly, and then remove the stepper motor.

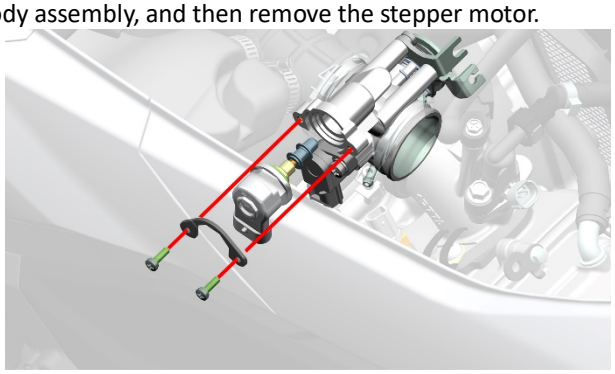

d. Use throttle cleaning agent to clean the carbon deposits on the head of the stepper motor. Spray a small amount of cleaning agent into the valve body hole. Do not soak the stepper motor with any liquid.



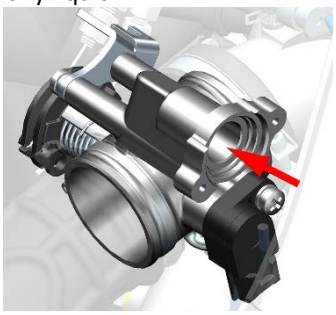

e. Install the stepper motor back onto the valve body, making sure the sealing ring is not missing. Plug the plug back in.

3. Remove the throttle valve body assembly and clean the carbon deposits

a. Unplug the stepper motor ① and sensor ②.

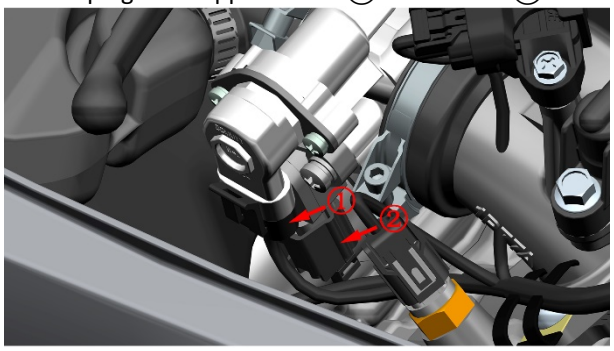

b. Place a small container under the high-pressure fuel pipe and untie the cable tie. Press the green buckle indicated by the arrow and pull out the high-pressure fuel pipe at the same time. A small amount of fuel will flow out when pulling it out, and it is forbidden to drip onto the surface of the parts.

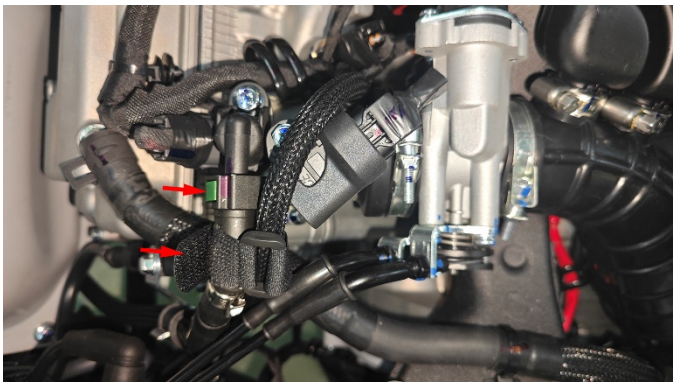

c. Find the retaining ring at the bottom of the valve body, pinch both ends of the retaining ring and move it out, then pull out the desorption tube.

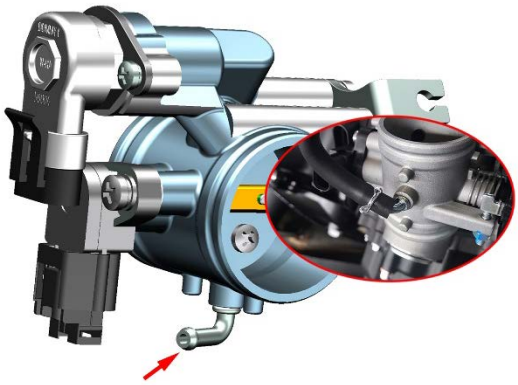

d. Use a 4# hexagon socket to loosen the bolts of the clamp and then pull the air filter outlet pipe and the clamp out of the throttle valve body in the direction of the arrow.

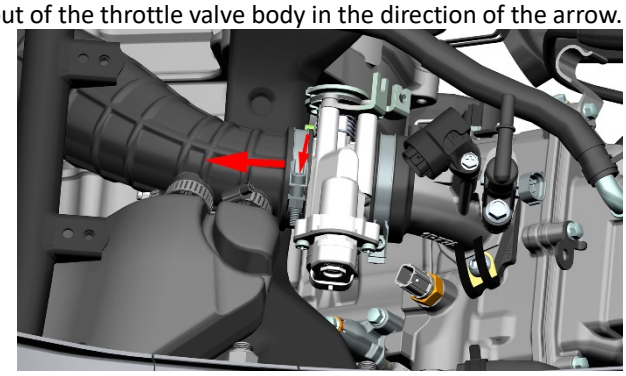

e. Use a 5# hexagon socket to remove the two bolts and remove the valve body assembly from the engine.

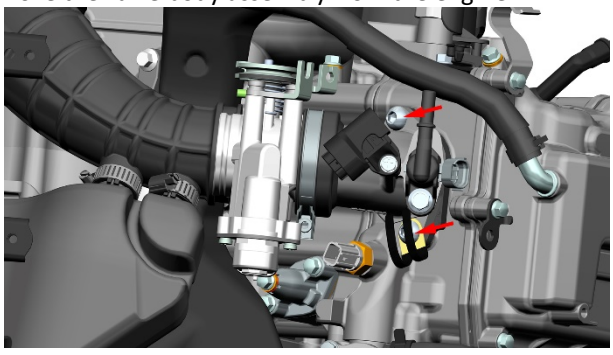

f. Remove the insulation pad and O-ring assembly, and remove the O-ring. Use a 4# hexagon socket to loosen the clamp and separate the intake manifold from the valve body assembly. Use two 10# open-end wrenches to loosen the two nuts on the fuel line and pull it out to remove it from the bracket; remove the cylindrical head of the throttle line from the turntable. After loosening the two nuts of the return oil line, completely loosen the bottom nut from the threaded sleeve and then pull out the bracket in the axial direction. Do not pull it directly outwards. Remove the cylindrical head of the return oil line from the turntable.



g. Use throttle body cleaning agent to clean the carbon deposits on the intake manifold and throttle body outlet. Do not soak the throttle body assembly and intake manifold assembly directly with any liquid.

h. After cleaning the insulation pad, replace two new O-rings ⑩ and assemble them in place. Clean the contact surface between the intake manifold and the insulation pad and the insulation pad and the engine end surface. Reset all parts in reverse order of disassembly.

4. Remove the sensor from the throttle valve body

a. If the idle speed is abnormal, the engine is prone to stalling, and the spark plug and high-voltage coil are excluded, the sensor needs to be removed for inspection. It should not be removed under normal circumstances.

b. Refer to the steps for removing carbon deposits without removing the throttle valve body and unplug the stepper motor ① and sensor ②.

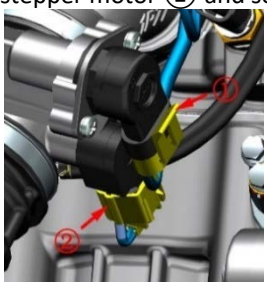



Simple test method: After turning off the power, take out the stepper motor, do not loosen the cable plug, press the flameout switch when turning on the machine, do not ignite, check whether the motor plug can shrink back and forth, and finally turn off the flameout switch to check whether the plug returns to its original position.

If you need to check whether the stepper motor is abnormal, you can measure the resistance between A and B to see if it is 53±5.3Ω.

c. Use a short cross screwdriver to remove the GB9074.4 M5×16 bolts ③ that come with the throttle body assembly, and remove the position sensor ④. When reinstalling, be sure to align the shaft ⑤.

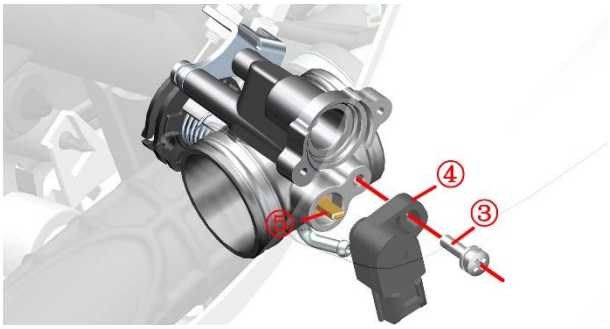

Simple test method: Connect the vehicle to the diagnostic instrument, press the ignition switch (no need to start the ignition), turn the throttle handle from the initial position to full open, and check whether the throttle position signal changes from 0 to 100.

Position sensor output voltage value Idle position: 0.7±0.1V; Full open position: 3.6-3.9V, input voltage DC5V±0.1V. f. Check the external intake pressure sensor:

Loosen the connector and check if the pins are crooked or broken.

Connect the vehicle to the diagnostic instrument, and without starting the engine, check the engine parameters and see if the pressure parameters are consistent with the local atmospheric pressure.

d. If you need to remove the intake pressure sensor, hold the bushing (2) firmly and remove the bolt (1) with an 8# short sleeve. If it is inconvenient to operate, remove the battery and the electrical device box before proceeding. Use pliers to clamp the clamp at the bottom and move it up to the top to remove the intake pressure sensor connecting hose (3) and the sensor together. Then remove the hose from the sensor.

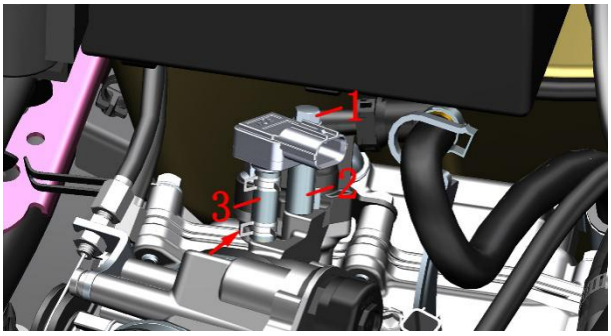

5. Throttle valve body troubleshooting process

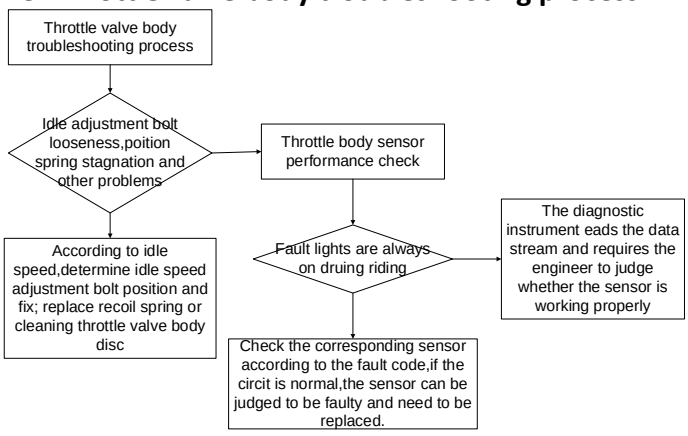

DANGER

●The vehicle must be parked on a flat, stable ground or a lift.

● Wait until the engine and muffler have cooled down before operating.

●When removing the high-pressure fuel pipe, prevent fuel from dripping onto the surface of the parts.

●Smoking, making phone calls, etc. are prohibited in the workplace.

CAUTION

●When removing the throttle valve body to clean the carbon deposits, the operation must be carried out in a dust-free environment to prevent dust from entering the engine.

●Prevent foreign objects from falling into the engine or air filter.

●If the stepper motor, sensor and thermal insulation pad are disassembled, do not miss the sealing ring and ensure that the sealing ring is properly assembled without any cutting edge.

●Never use carburetor cleaner or compressed air to clean the throttle body.

●After reinstalling the battery, the electronic fuel injection system needs to be reset. The specific method is as follows:

a. Unlock the vehicle and raise the main stand;

b. Press the brake and start the vehicle;

c. Increase the engine speed to over 3000rpm;

d. After releasing the accelerator, turn off the ignition switch and lock the vehicle;

e. Wait for 5 seconds and then unlock the vehicle again to complete the reset of the EFI system.

Throttle cable

1. Inspection

a. Check whether the right handlebar rubber sleeve and throttle cable are damaged.

b. Check whether the rubber sleeve can rotate smoothly with the right hand and can return to its original position automatically.

c. Hold the steering handle with both hands and turn it to the right hand while rotating the rubber sleeve of the right handle. Check whether the throttle can be reset normally after each turn. If it cannot be reset, lubricate the cable or the inside of the right handle; or replace the throttle cable or the rubber sleeve of the right handle.

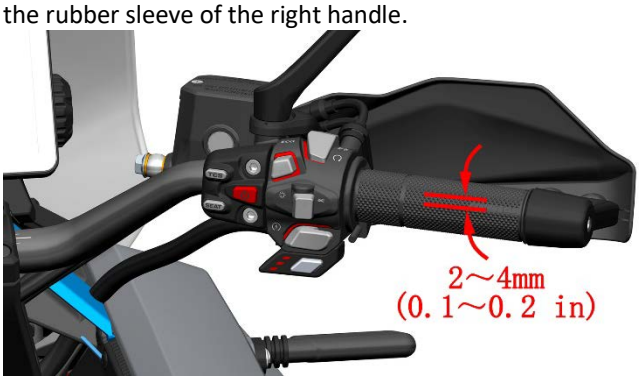

d. After starting the engine , turn the steering handle left and right to ensure that the idle speed remains unchanged during the steering process , and then turn off the engine.

e. Turn the rubber sleeve with your right hand to check whether the cable gap is between 2 and 4 mm (0.1 and 0.2 in).

ETC do not require adjustment of the free angle

2. Adjust the throttle cable clearance

a. After removing the protective rubber sleeve, use an 8 # open-end wrench to fix the adjusting screw ②, and then use a 10 # open-end wrench to loosen the nut ① counterclockwise. Turning the adjusting screw ② clockwise can reduce the free travel , and turning it counterclockwise can expand it; adjust the gap to the specified value. After adjusting the gap, tighten the nut ① and then reset the protective rubber sleeve.

Torque: 3.8 Nm (0.4 kgf.m, 2.8 lbf.ft).

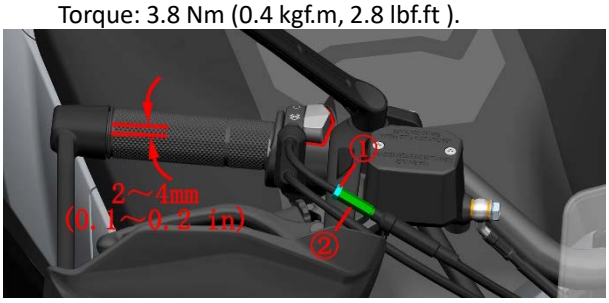

b. If the above adjustment cannot achieve the expected effect, refer to the description in " Removing the throttle body assembly to clean carbon deposits" to remove the throttle body assembly. Use a 10# open-end wrench to loosen the two nuts on the bracket to adjust. Torque: 3.0 Nm (0.3 kgf.m, 2.2 lbf.ft).

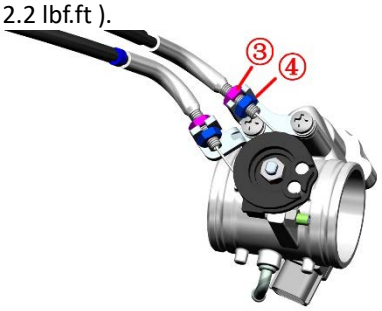

c. If the above two adjustments are ineffective, replace the throttle cable with a new one.

Idle -Done

Notice:

● Before checking the idle speed, you should first check other engine maintenance items and make sure they are in normal condition .

● Before checking the idle speed , check the following items:

maintenance reminder light “ ” should not light up.

spark plug condition has been checked.

air filter element and air inlet filter element have been checked or replaced.

Check the throttle clearance.

● It is forbidden to adjust the limit screw on the valve body without authorization .

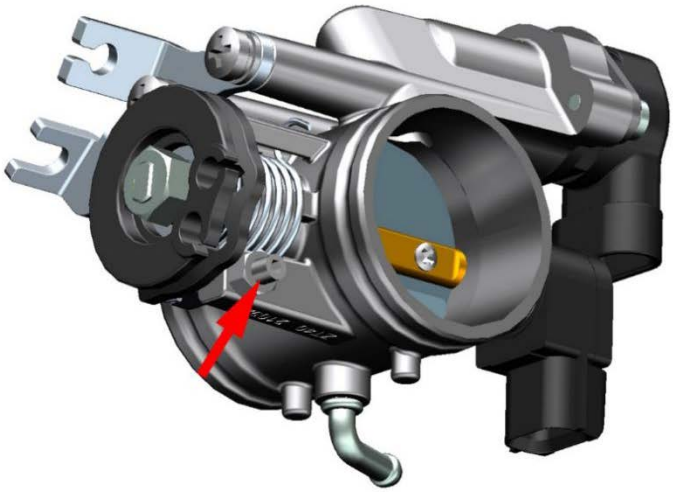

Check the idle speed :

The engine idle speed should be checked when the engine is hot.

The engine idle speed range should be between 1500-1700 rpm .

If the idle speed is not within the standard range or the vehicle stalls at idle, you should go to a ZONTES authorized maintenance point or a qualified maintenance unit to have professional service personnel inspect and handle it.

idling or flameout requires inspection or repair according to the troubleshooting process in the "Electronic Fuel Injection System " chapter of this manual.

Fuel Evaporative Pollutant Control System

368G、250G：

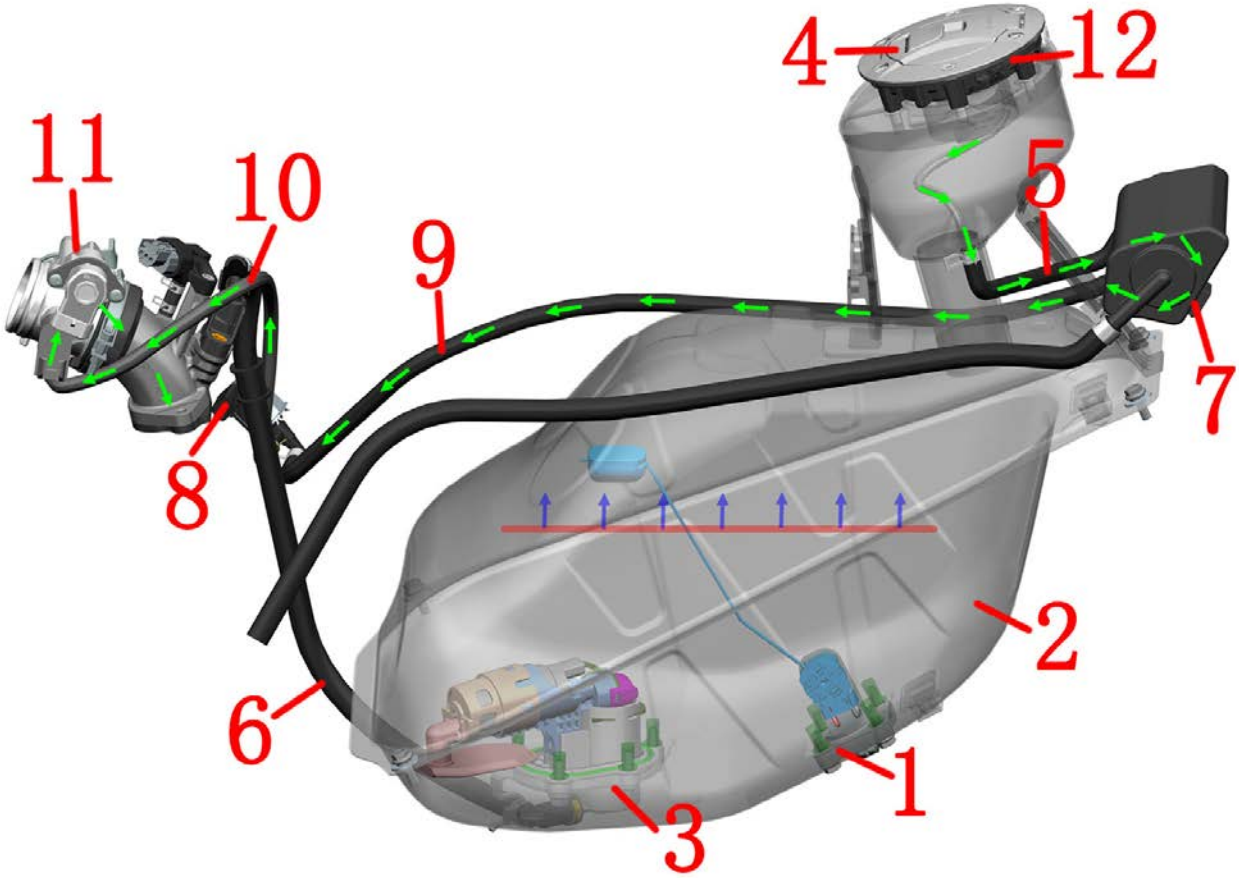

1 - Fuel level sensor 2 - Fuel tank 3 - Fuel pump 4 - Fuel tank cap 5 - Adsorption /vent pipe
6 - High pressure oil pipe 7 - Carbon canister 8 - Carbon canister solenoid valve
9 - Solenoid valve inlet pipe 10 - Solenoid valve outlet pipe 11 - Throttle valve body assembly

Fuel evaporation:
Oil and gas → Oil and gas separator (inside the fuel tank) → Adsorption /vent pipe → Solenoid valve inlet pipe → Solenoid valve outlet pipe → Throttle valve body assembly → Intake manifold → Cylinder

368G ETC:

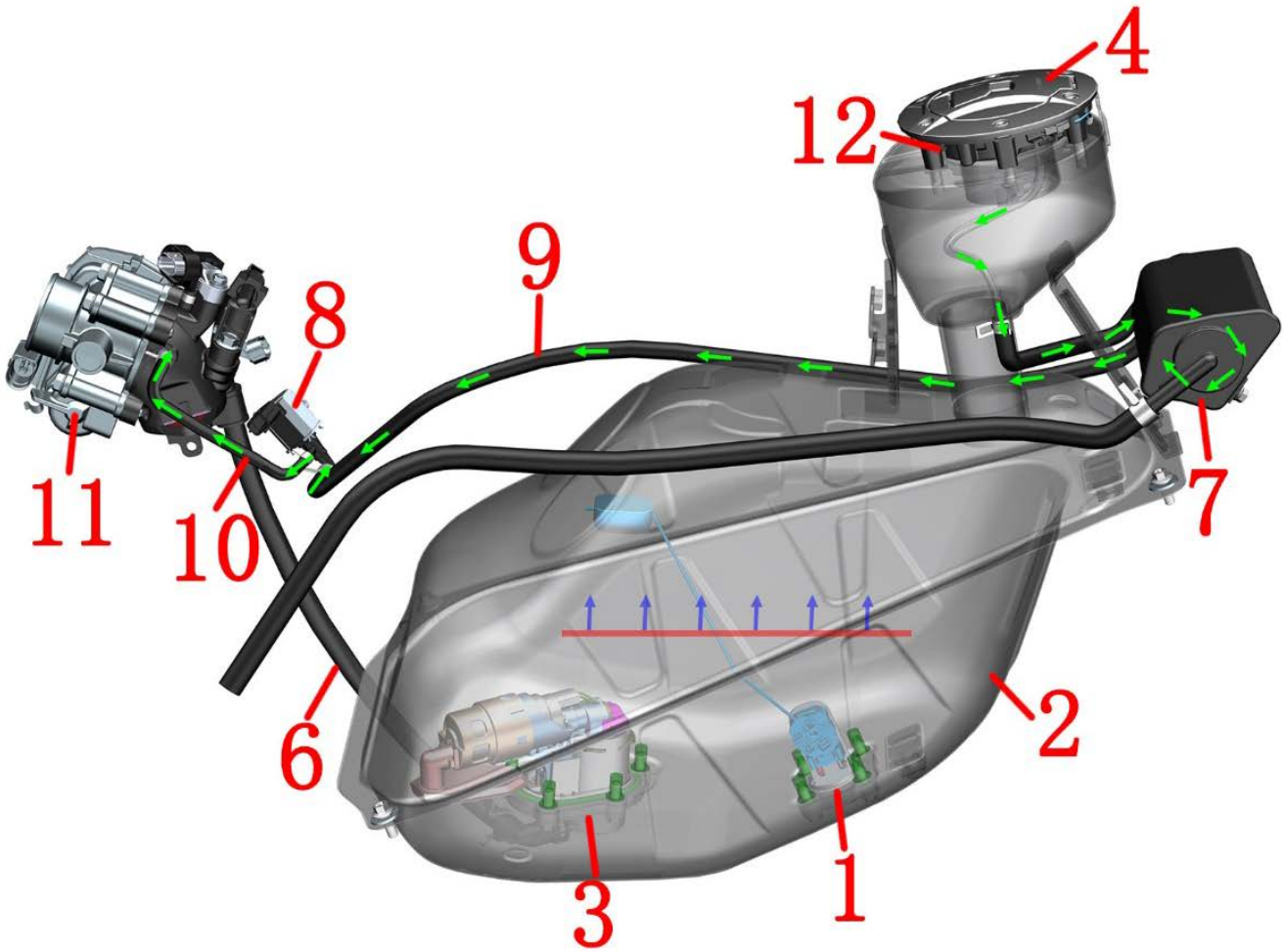

1 - Fuel level sensor 2 - Fuel tank 3 - Fuel pump 4 - Fuel tank cap 5 - Adsorption /vent pipe
6 - High pressure oil pipe 7 - Carbon canister 8 - Carbon canister solenoid valve
9 - Solenoid valve inlet pipe 10 - Solenoid valve outlet pipe 11 - Throttle valve body assembly

Fuel evaporation:
Oil and gas → Oil and gas separator (inside the fuel tank) → Adsorption /vent pipe → Solenoid valve inlet pipe → Solenoid valve outlet pipe → Throttle valve body assembly → Intake manifold → Cylinder

The evaporative pollutant control system can only be inspected after the covers are removed.
Inspect the canister for cracks or damage.
Inspect suction/vent tube for cracks or damage.
Check whether the carbon canister solenoid valve is working properly.
Check whether the inlet and outlet pipes of the solenoid valve are cracked or damaged.
Check whether the hoses are bent or not, which may cause airflow obstruction.

Heat sink

DANGER

● The vehicle must be parked on a flat, stable ground or a lift.
● Wait until the engine and muffler have cooled down before operating.
●Swallowing or inhaling coolant can be harmful to the human body.

CAUTION

●Check the coolant level regularly and always keep it above the “L” line.
●It is recommended to replace the coolant every 4 years or 40,000 kilometers (24,855 miles) .
● Swallowing or inhaling coolant will cause certain harm to the human body. Wash hands, face and any exposed skin thoroughly after adding coolant each time. If swallowed by mistake, contact the poison control center or hospital immediately; if inhaled, go to a ventilated environment immediately. If splashed into the eyes, rinse the eyes immediately with plenty of running water and seek medical attention or treatment in time. Keep away from children and pets.
● The engine coolant must be a model suitable for aluminum radiators, based on ethylene glycol. Use a coolant suitable for aluminum radiators, which is a mixture of coolant concentrate and distilled water in a certain proportion. If water needs to be added, only distilled water can be added. Other water qualities may corrode the engine cooling system or cause more serious consequences.
● The corresponding antifreeze should be selected according to the lowest temperature that can be reached in the local area. The vehicle is factory-added with Total -35 ℃ (-31F) green antifreeze. The total amount of coolant is 1.44L (1.52 US qt, 1.27 lmp qt, 0.38 US gal, 0.32 lmp gal).
● Coolant may damage the paint surface, so be careful when adding it. Any small amount of splashes should be wiped off immediately with a clean soft cloth.

1. Check the coolant

a . Straighten the vehicle and check from the right rear gap with a flashlight whether the coolant level is between "H" and "L". Make sure the ground is as flat as possible and do not check on a slope. The engine must be cold.



2. Add coolant (antifreeze) to the auxiliary water tank

If the water level in the auxiliary water tank is lower than the "L" line, you need to add an appropriate amount of coolant . If there is no coolant in the auxiliary water tank, you need to first check whether the cooling system has leaks, and you can only add it after the inspection is completed.

Open the auxiliary water tank cap and add an appropriate amount of coolant with the help of a funnel. Straighten the vehicle and use a flashlight to check whether the liquid level in the auxiliary water tank is between "H" and "L". Make sure the ground is as flat and level as possible and do not check on a slope. The engine must be in a cold state.

3. Add coolant to the main water tank

a. Use a 4# hexagon socket to remove the two expansion nails (1) that fix the right decorative cover (2) of the fuel tank lock, and then push the right decorative cover (2) of the fuel tank lock in the direction of the arrow until the right decorative cover (2) of the fuel tank lock is removed.

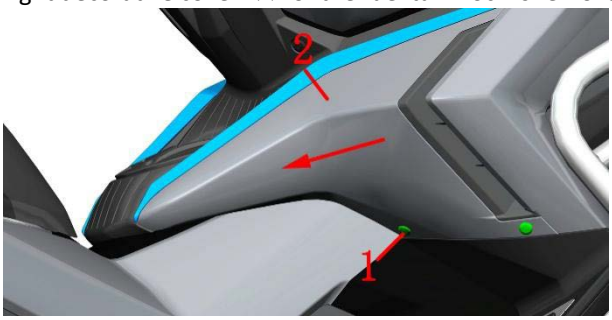

b. Use an 8# socket to remove the M6 × 12 bolt (3) that secures the water inlet , press down the water inlet cover (4), turn it counterclockwise, and remove the water inlet cover (4).

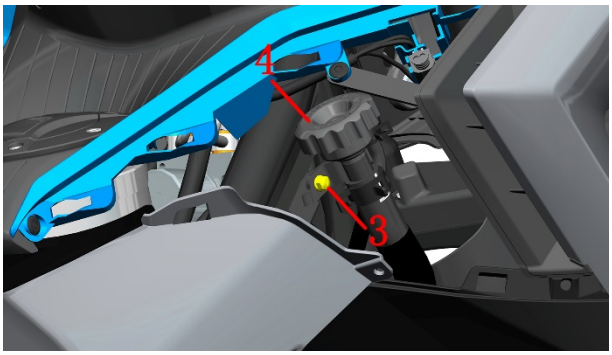

c. Use a 10# sleeve to loosen the thermostat's M6×12 bleed bolt (5) counterclockwise for 4 to 5 turns. Do not remove it completely. Note that a small container should be used to collect the coolant overflowing from the bleed bolt. Do not allow the coolant to drip directly onto the surface of the part. The O-ring at the bleed bolt is ϕ 5.6×ϕ1 .

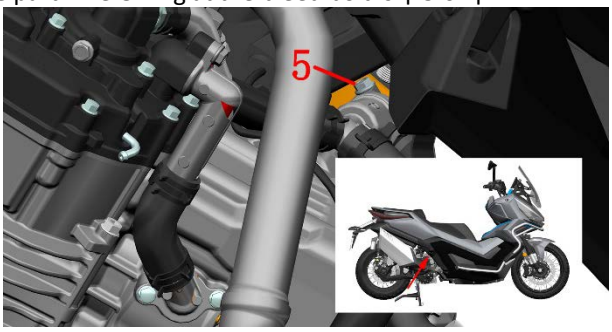

d. Wear waterproof gloves and use an extended funnel to add coolant to the main water tank water inlet. Wait until the thermostat bleed bolt position is stable and the coolant overflows, and the coolant level can be seen at the water inlet.

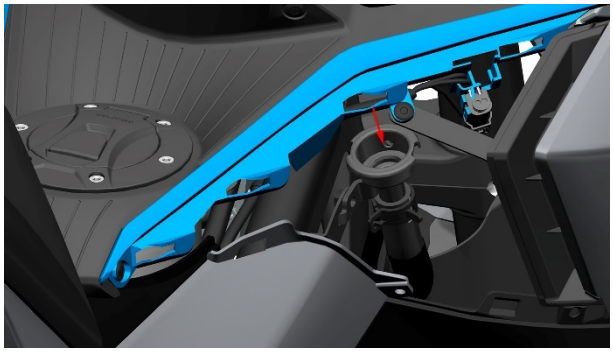

d. Tighten the main water tank water inlet cover. Tighten the exhaust bolt (2) ; torque: 8 ~ 10N. m (0.8 ~ 1 kgf.m, 6 ~ 7 lbf.ft) .

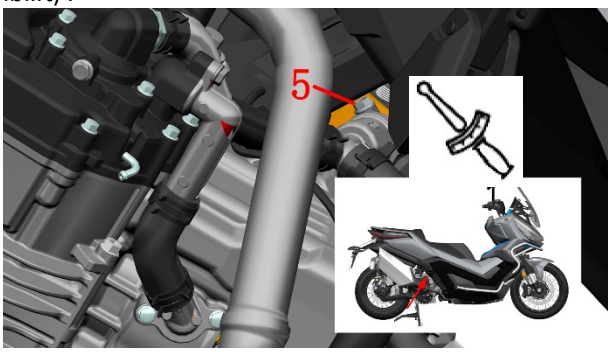

4. Release coolant

a. Place the oil pan underneath, wear waterproof gloves and use a 10# socket to remove the M6×12 drain bolt (6) and the ϕ 5.6×ϕ1 O-ring (7) .

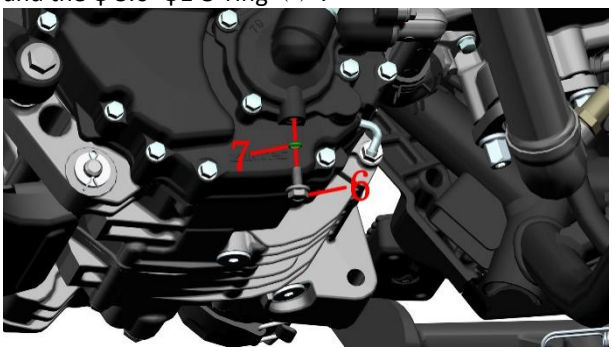

b. Remove the main water tank filler cap to speed up the coolant outflow.

all joint surfaces clean with non-woven fabric , check whether the joint surface of bolt (6) is scratched, if so , replace it with a new one . The O-ring (7) needs to be replaced every time it is disassembled .

d. Put the new O-ring (7) onto the bolt (6) first , and be careful not to scratch the O-ring . Torque of bolt (6) : 8～10N.m (0.8 ～ 1kgf.m,6 ～ 7lbf.ft) .

5. Check whether the fins of the radiator tank are deformed or the air duct is blocked

a. Use compressed air or low-pressure water guns, brushes, etc. to remove dirt such as sand and insects from the surface of the radiator . When using compressed air, be careful not to get too close to the fins. Do not use high-pressure water guns to directly flush the radiator to avoid deformation of the fins and blockage of the air duct.

6. Check all water pipes for leakage and aging

368G、250G:

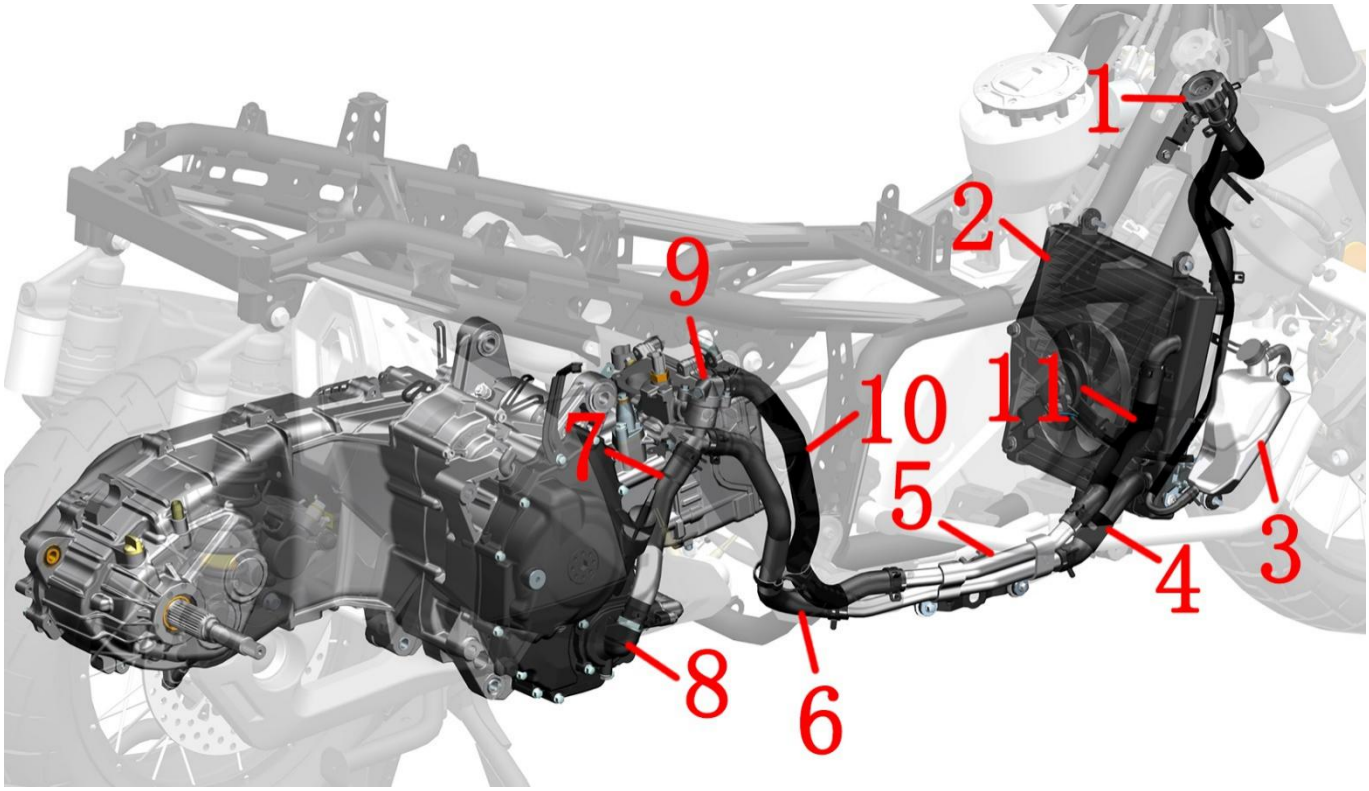

1 - Main water tank filling port 2 - Main water tank 3 - Auxiliary water tank
4 - Main water tank outlet pipe 5 - Aluminum water pipe 6 - Engine water pipe
7 - Water pump cover water inlet pipe 8 - Water pump cover assembly 9- Thermostat assembly
10- Thermostat water outlet pipe 11- Main water tank water inlet pipe

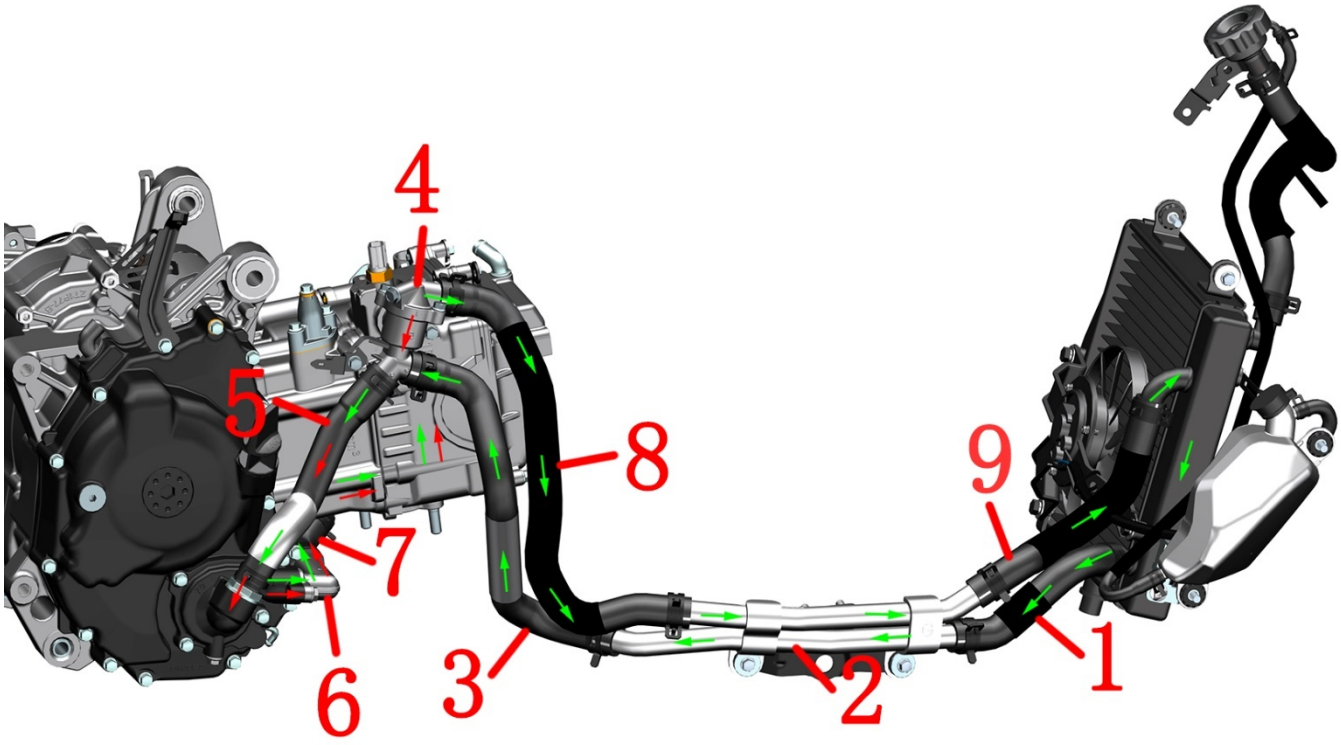

1- Main water tank outlet pipe 2- Aluminum water pipe 3- Engine water pipe 4 - Thermostat
5 - Water pump cover water inlet pipe 6 - Water pump cover water outlet pipe joint
7 - Water pump cover water outlet pipe 8 - Thermostat water outlet pipe
9 - Main water tank water inlet pipe

ETC:

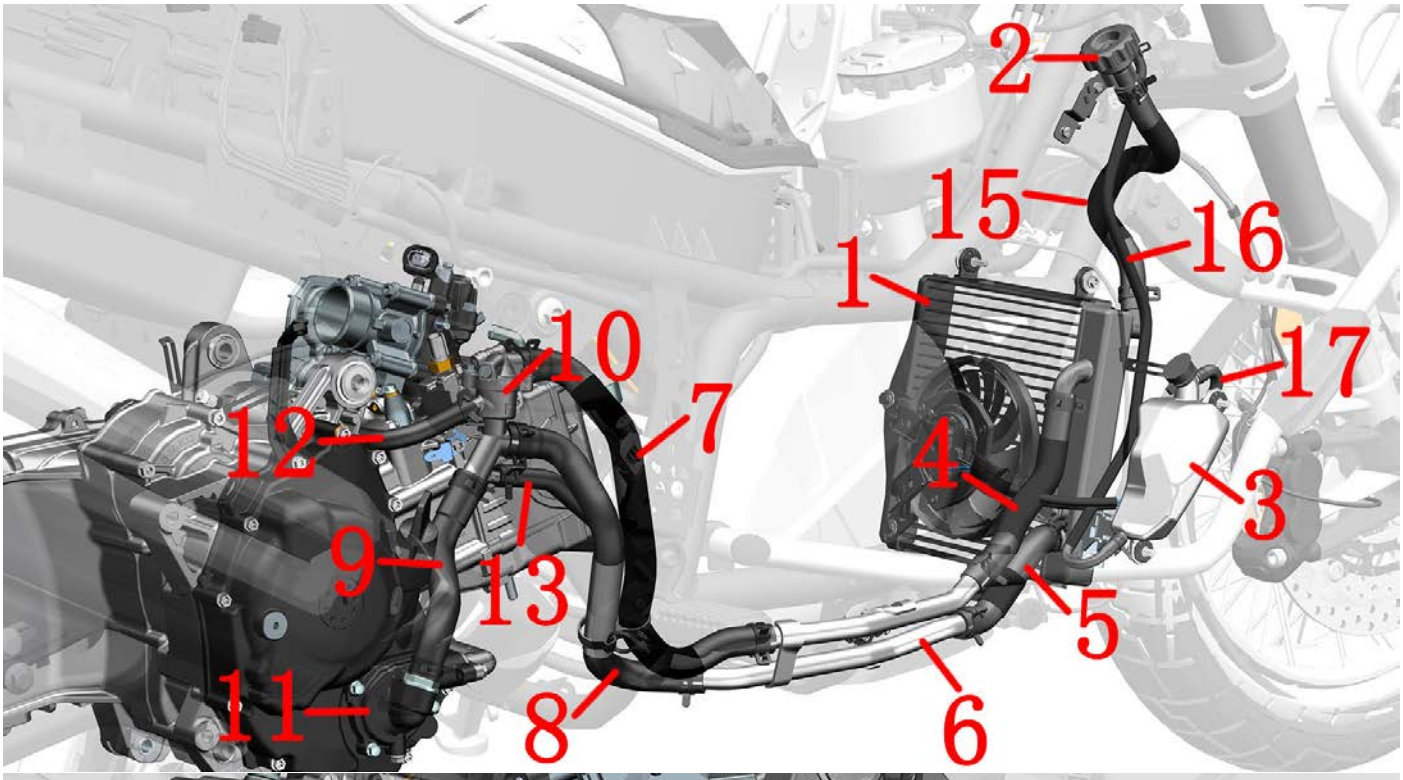

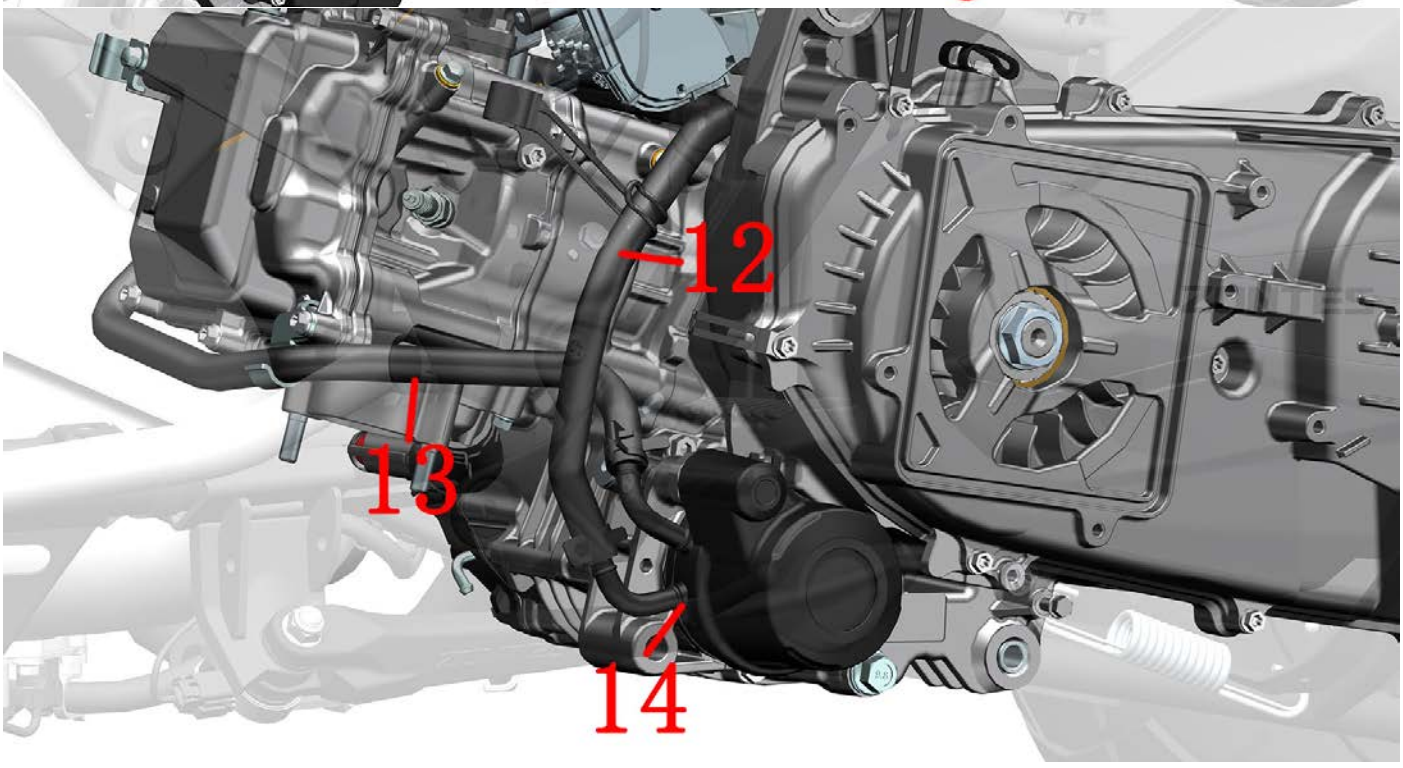

1- Main water tank 2- Main water tank filling port 3- Auxiliary water tank
4- Main water tank water inlet pipe 5- Main water tank outlet pipe 6- Aluminum water pipe
7- Thermostat water outlet pipe 8- Engine water pipe 9- Water pump cover water inlet pipe
10- Thermostat 11- Water pump cover assembly 12- Oil Cooler Water Inlet Pipe
13- Oil Cooler Water Outlet Pipe 14- Oil Cooler 15- water tank water inlet connection water pipe
16- auxiliary water tank connecting water pipe 17- Sub Water Tank Leak Pipe

Fuel Pipe

Note:

●When disassembling the high-pressure fuel pipe, a small amount of fuel will flow out, and an oil pan should be used to catch it properly.

●Operations should be carried out in open and well-ventilated areas. Smoking, making mobile phone calls, and all other behaviors that may cause sparks are prohibited at the work site.

1、Use an endoscope with LED lights to check for fuel pipe leaks

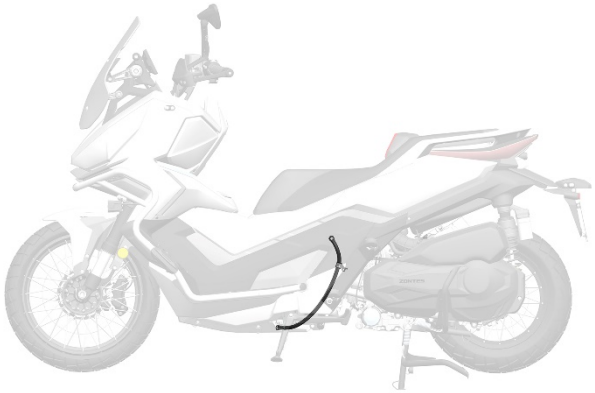

368G



The above image shows a schematic of an LED-equipped endoscopic device. This image is sourced from the internet, and the copyright belongs to the original author. Please do not use it for other purposes.

2、Replace high-pressure oil pipe

a. Remove the rear storage box according to the "ZT368T-G Rear Storage Box Disassembly and Assembly Video Tutorial" in the Shengshi official website assembly video, disassembling it to the state shown in the figure below.

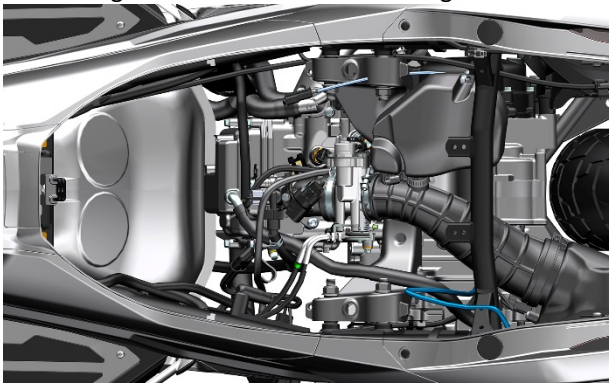

b. Use a T25 Torx wrench to remove the 5 M6×12 bolts (1) on both sides and the 4 M6×16 bolts (2) in the middle. Remove the bottom of the lower cowling (3).

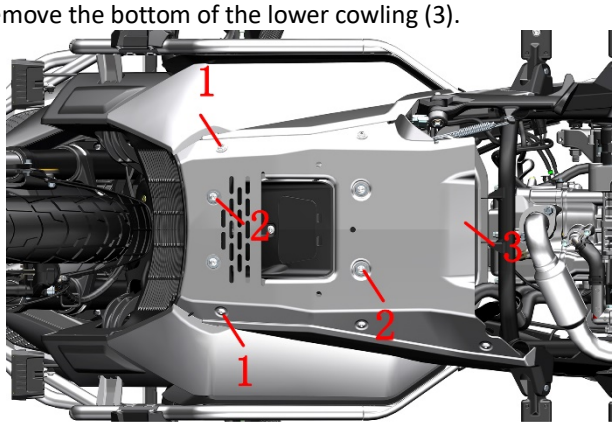

c. Disconnect the fuel pump plug, start the engine and let it idle until it stalls. Turn the engine stop switch to "", turn off the vehicle's power, and then lock the vehicle.

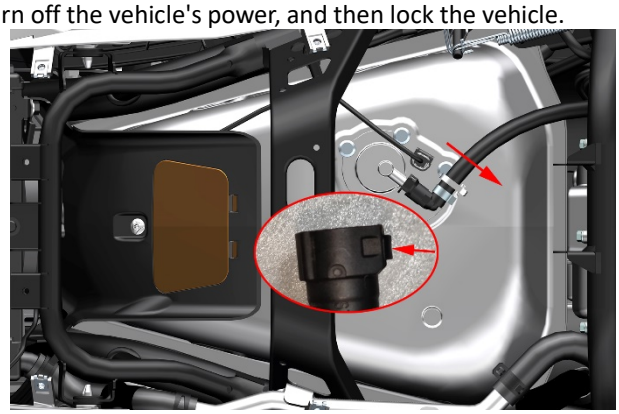

d. Press the anti-drop locking buckle at the fuel injector and then pull out the high-pressure oil pipe in the direction of the arrow.

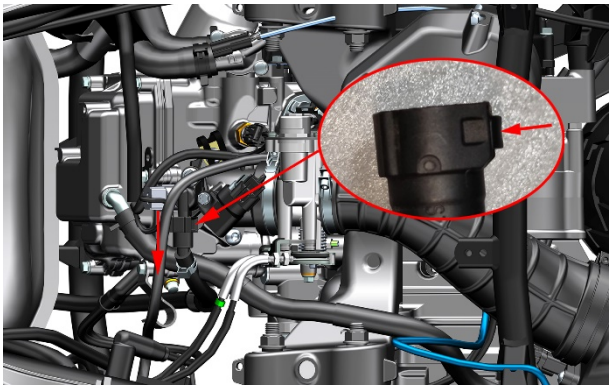

e. After replacing the new high-pressure oil pipe, refer to the disassembly steps for reinstallation.

3、fuel pump

3. 1Measure fuel pressure using an oil pressure gauge

Pull out the high-pressure oil pipe at the fuel injector according to the above steps. Connect the original high-pressure oil pipe to the pressure gauge, and then find another high-pressure oil pipe to connect the pressure gauge and the fuel injector.

Start the vehicle and let the engine idle, then measure the fuel pressure.

Standard pressure: 350±10kPa (3.57±0.1 Kgf/cm2, 50.8±1.45 psi). Check valve performance: After holding pressure for 1 minute, the pressure should be ≥300kPa (3.06 Kgf/cm2, 43.5 psi).

3. 2**Simple Test Fuel Pump**

If the conditions for dedicated instruments and equipment are not met, a simple test can be conducted.

When the vehicle is in the off state and then unlocked, turn the ignition switch to the position without starting the engine, and you should be able to hear the sound of the fuel pump working; or, by pinching the high-pressure fuel pipe from the bottom with your hand, you should be able to feel obvious pressure. Be careful to avoid the muffler area to prevent burns. If the engine is in the starting state, cut off the power to the entire vehicle for more than 10 seconds and then perform the above operations for inspection.

4、Abnormal Fuel Pressure Handling

If the fuel pressure is higher than the standard value, the fuel pump needs to be replaced. If it is lower than the standard value, the following items need to be checked:

a. Is the fuel pipe leaking?；

b. Is the fuel tank vent tube blocked or excessively bent?；

c. Is the fuel pump filter clogged?；

d. Is the fuel pump malfunctioning?；

e. Is the fuel insufficient?。

DANGER

●When pulling out the high-pressure oil pipe, ensure that it is pulled in the axial direction, and do not press, push, or pull the protruding parts of the fuel pump and nozzle holder.

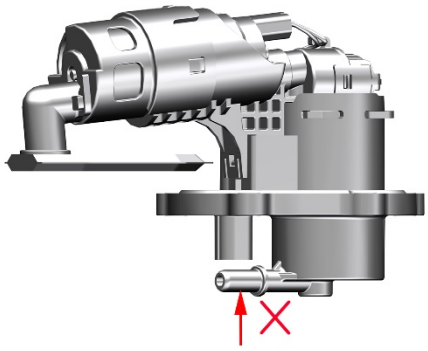

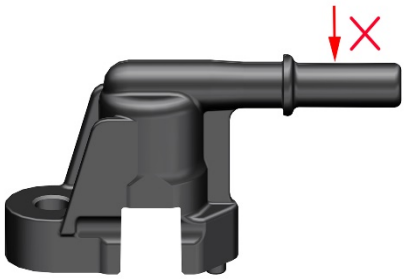

●Smoking, making mobile phone calls, and all other actions that may potentially cause a fire are prohibited at the disassembly site.

●The fuel pump is a precision component that needs to be assembled in a dust-free workshop and requires strict testing, so self-disassembly is prohibited.

DANGER

●After reinstalling the battery, the electronic fuel injection system needs to be reset. For specific operations, please refer to the driving manual or the precautions in the throttle body section of this manual.

Brake System

Attention：

●For details on the arrangement of brake hoses on the vehicle, please refer to the brake system component distribution diagram in the "Vehicle Information" chapter of this manual.

Note:

For the convenience of after-sales tracking, all purchases of brake hoses, disc brake calipers, disc brake master cylinders, and hydraulic control units must be approved by our company before they can be purchased.

●The 250G, 24 models of 368G, and ETC 368G braking systems have basically the same functions and component positions. The following content will take the ETC 368G as an example for explanation.

Brake System Component Diagram：



制动系统总成示意图

Brake system assembly sketch map

Attention:

●This inspection shall be completed by a qualified maintenance unit.

●The brake fluid level should be checked regularly to ensure it is at 3/4 of the observation window.

●If brake fluid is accidentally swallowed, contact the Poison Control Center or a hospital immediately; if it gets into the eyes, rinse with clean water and seek medical attention immediately.

●Brake fluid must be kept away from children and pets.

●It is strictly prohibited to directly flush the main pump with high-pressure water.

1、Check brake components

a. Check whether the fluid levels of the front disc brake master cylinder and rear disc brake master cylinder are above the "LOWER" line. Check whether there is brake fluid leakage at the tubing joints. Observe the color of the brake fluid, which should normally be light yellow; if the color darkens, it is recommended to replace the brake fluid.



b. Park the vehicle on a flat surface or a lift platform, and lower the main stand. Check whether there is brake fluid leakage at the oil pipe joints of the main pump, ABS hydraulic control unit, and caliper. An endoscope with LED can be used to facilitate the inspection of the oil pipe joints of the ABS hydraulic control unit and the main pump, or the corresponding covers can be removed for inspection.

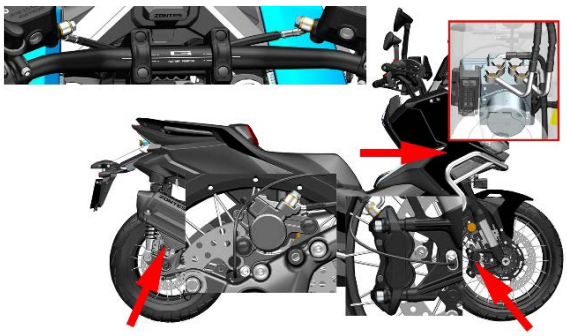

c. Measure the thickness of the front and rear brake discs before and after measurement. If it is less than 4.0mm (0.16 in), replacement is required. Lift the front wheel off the ground, turn the front wheel by hand, and observe whether there are any obvious damages on the surface, such as pits, deep scratches, grooves, etc. If so, replacement is recommended. Use your hand to feel whether there is an obvious sound of the brake disc being rubbed when turning the front wheel. Observe from the front whether the brake disc wobbles when turning the front wheel; if there is wobbling, remove it by referring to the steps for removing the brake disc, place it on a standard platform, use a dial indicator to measure the runout, or use a feeler gauge to check the clearance between the brake disc and the standard platform; if it is >0.08mm (0.003 in), a new brake disc needs to be replaced. Check the rear brake disc in the same way.

⚠WARNING

●Before performing the brake disc inspection operation, it is essential to wait until the brake disc has cooled down.

●Do not use water spraying to reduce the temperature of the brake disc, as it may cause deformation of the brake disc and produce abnormal noise.

●If a brake disc anti-theft lock has been used, it should be confirmed whether it has been removed before driving the vehicle.

●Sediment adhering to the brake disc should be cleaned regularly.

d. Check the brake caliper bolts

Use an 8# hexagon socket to remove 2 M10×1.5×60 bolts. The standard torque for these bolts is 45～50 N.m (4.6～5.1 kgf.m, 33～37 lbf.ft). Do not operate the brake lever after removing the caliper.

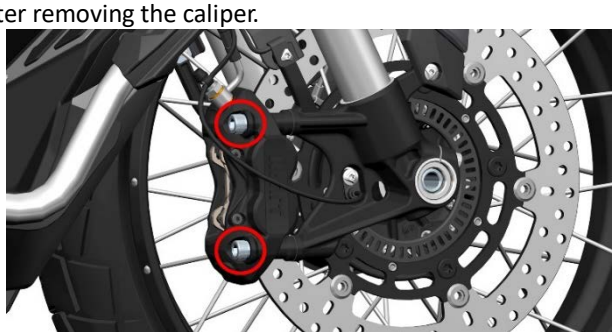

e. Pull out the front brake caliper assembly and check the wear of the brake pads. If they are worn or nearly worn to the limit position, new brake pads need to be replaced in pairs.



f. Refer to the section on bolts and nuts of the muffler, and remove the rear section of the muffler.

For early production models, use a 14# socket; for later production models, use a 10# socket to remove bolt (3). Use a T25 Torx wrench to remove bolt (4) and take out the wheel speed sensor (5). The standard torque for bolt (3): 24 N.m (2.4 kgf.m, 18 lbf.ft).

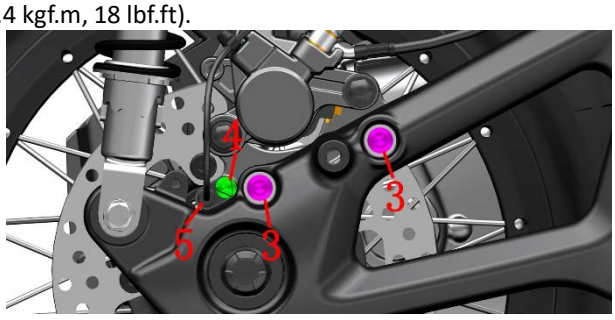

g. Pull out the rear caliper assembly and check the wear of the brake pads. If they are nearly worn or have worn to the limit position, new brake pads need to be replaced in pairs.



DANGER

●Qualified maintenance units should be required to regularly inspect and maintain brake pads.
●Do not drive immediately after replacing new brake discs or brake pads. Be sure to grasp and release the brake lever several times to allow the brake discs and brake pads to fully fit together, restore normal gripping force, and ensure stable circulation of the brake fluid.
●After replacing with new brake discs or brake pads, the braking distance may be longer than the original one. It takes about 300 kilometers (186 miles) of use for the brake discs and brake pads to fully run in before achieving the optimal braking effect. Before full running-in, sufficient braking distance should be allowed to ensure driving safety.

WARNING

●Brake pads must be replaced in pairs; replacing only one side will cause uneven braking.
●If the brake pads are not in the correct position, do not operate the brake handle. Otherwise, it will cause difficulty in piston reset and may lead to brake fluid leakage.

2、Check the front and rear brake switches

2.1 Check the brake switch

Respectively hold the brake levers of the front and rear disc brake master cylinders, and observe whether the rear brake light comes on. If it does not light up, it is necessary to troubleshoot: whether the brake switch is faulty; whether the rear brake light is faulty; whether the fuse has blown; whether the circuit is open.

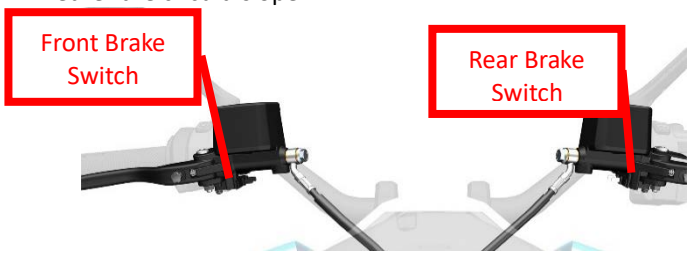

2.2 Replace the brake switch

Take the replacement of the rear brake switch as an example for explanation.

a. Pull out the two plugs of the brake switch in the direction of the arrow, without distinguishing between positive and negative poles.

b. Remove the bolt ① with a Phillips screwdriver to remove the rear brake switch.

c. Replace with a new switch, and pay attention to aligning the switch boss with the limit hole of the brake master cylinder.



The replacement steps for the front brake switch are the same as those for the rear brake switch. Simply remove bolt ① to replace the brake switch.



3、Lubricate the moving parts of the brake handle

3.1 Pre-lubrication brake handle

a. Use a 10# box wrench to rotate counterclockwise to remove the nut (3).

b. After grasping the handle, use a 5# hexagon wrench to rotate counterclockwise to remove bolt (1); then remove the brake handle.

c. Wipe clean the handle pusher head and the outer end of the piston (the position shown in Figure (2)) with a clean non-woven fabric, and evenly apply high-vacuum silicone grease.

d. Wipe bolt (1) clean and evenly apply high-vacuum silicone grease.

e. Reloading.

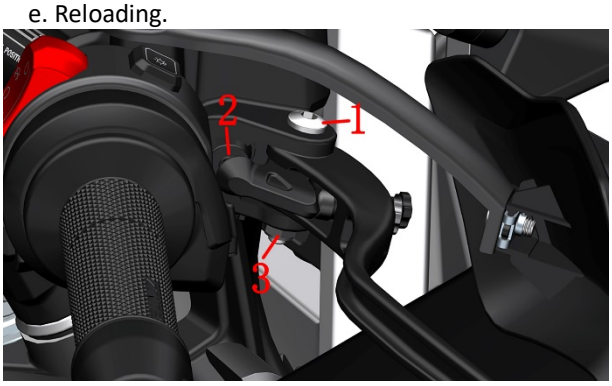

3.2 Brake lever after lubrication

Lubricate the brake lever according to the above method.

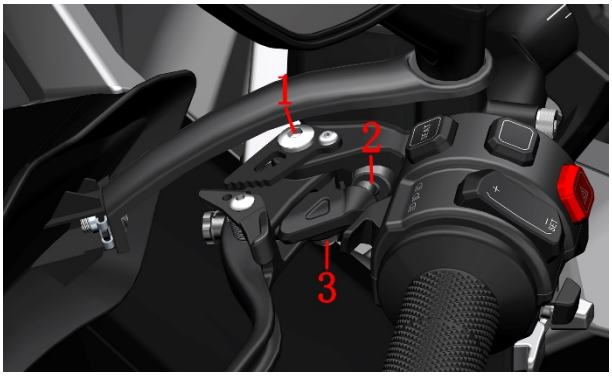

3.3 Replace the brake handle

After removing nut (3) and bolt (1) according to the previous steps, a new brake handle can be replaced.

4、Adjust the brake handle

To accommodate more drivers operating this vehicle model, an adjustable brake handle is provided.

24 models of 368G, 250G：

Taking the right front brake lever as an example, in the perspective shown in the figure below, push the end of the lever all the way in the direction of the arrow, then use your hand to adjust the wheel clockwise. When the push head extends, the distance between the lever and the rubber sleeve will increase; conversely, it will decrease. The

adjustment method for the left rear brake lever is the opposite of that for the right one.



ETC：

Rotate the adjusting bolt in the direction of the arrow to increase the distance between the handle and the rubber sleeve; conversely, it will decrease.



Front brake lever

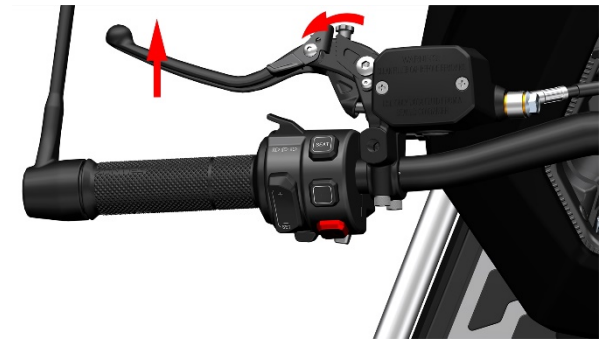

Rear brake lever

5、Replace brake pads

DANGER

●Qualified maintenance units should be required to regularly inspect and maintain brake pads.

●Do not drive immediately after replacing the brake pads. Be sure to grasp and release the brake lever several times to allow the brake disc and brake pads to fully fit together, restore normal gripping force, and ensure stable circulation of the brake fluid.

●After replacing with new brake pads, the braking distance may be longer than the original one. It takes about 300 kilometers (186 miles) of use, and only after the brake discs and brake pads are fully run-in can the optimal braking effect be achieved. Before full run-in, sufficient braking distance should be allowed to ensure driving safety.

WARNING

●Brake pads must be replaced in pairs; replacing only one side will cause uneven braking.

●Brake pads must be correctly installed.

●Do not operate the brake lever after removing the brake pads.

5.1 Replace front brake pads

a. Remove the two M10×1.5×60 bolts using an 8# hexagon socket. The standard torque for these bolts is 45～50N.m (4.6～5.1 kgf.m, 33～37 lbf.ft). Do not operate the brake lever after removing the caliper.

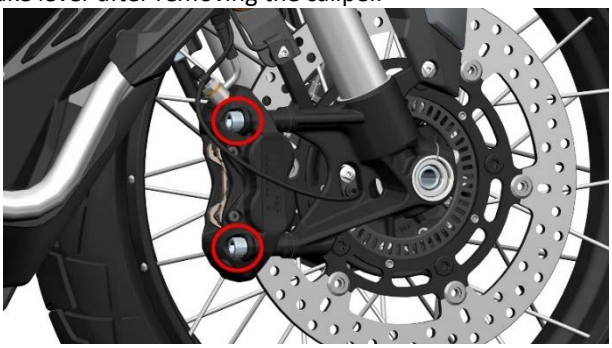

b. Use a T25 hexagon socket torx wrench to first remove the pin ② in the figure, and then remove the lower pin.



c. Remove shrapnel ③, remove brake pad (1).

d. Clean foreign matter such as dust from the outer edge of the piston and the pin shaft.

e. Push the piston all the way down in the direction of the arrow.



f. If the resistance is very large, you can refer to the method of adding brake fluid to the front brake master cylinder, remove the upper cover, and then push. Use a Phillips screwdriver to remove bolt ④ on the front disc brake master cylinder assembly, remove upper cover ⑤, cover plate ⑥, and sealing gasket ⑦.

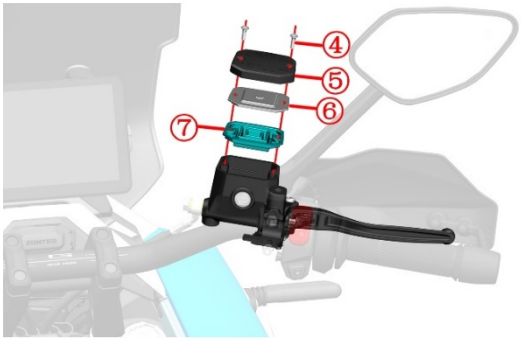

g. Before restoration, the disc brake master cylinder assembly must be accurately installed in place.

h. Install the two brake pads (1) back into the caliper, and install the spring clip ③ between the two brake pads. During assembly, the direction indicated by the arrow on the spring clip should be upward.

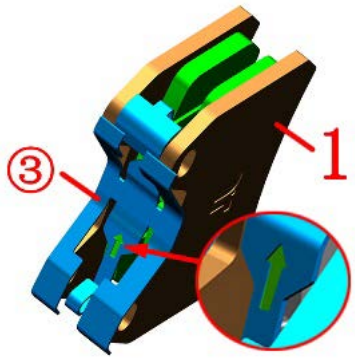

i. Use your hand to press the sheet body at the position indicated by arrow ⑨ inward in the direction of the arrow, insert the pin shaft ② into the hole to fix the brake pad (1), and tighten the pin shaft ② with a T25 hexagon socket wrench.



j. Use your hand to press the sheet body at the position indicated by arrow ⑧ inward in the direction of the arrow, insert the pin shaft ② into the hole to fix the brake pad (1), and tighten the pin shaft ② with a T25 hexagon socket wrench.

k. Install the two snap rings ① back onto the pin shaft. Once the snap rings click into place, the assembly is complete. When installing the snap rings, ensure that the flanges face outward. If the snap rings are deformed, they can be corrected with a hammer using appropriate force.

l. Repeatedly operate the control handle until the braking force is restored.

5.2 Replace rear brake pads

a. Refer to the disassembly steps of the reference muffler, and remove the rear section of the muffler after disassembly.

As shown in the figure below, use a 10# socket to remove the two M8 bolts ①. (Early production models use a 14# socket, while later production models use a 10# socket)



b. Use a T25 Torx wrench to remove Bolt ②, and take out the wheel speed sensor on the left side of Bolt ②. To remove the rear caliper, refer to the caliper removal method for operation.

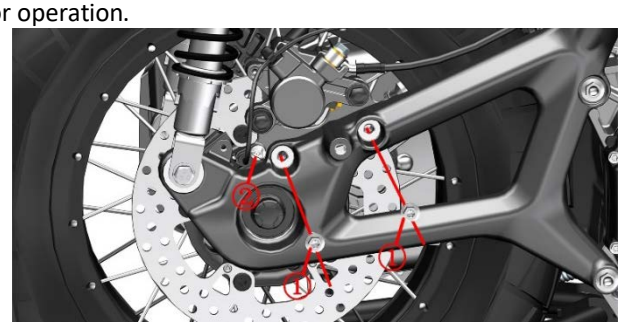

c. Use a No. 5 hexagon socket wrench to remove one pivot pin ③ of the rear brake caliper.



d. Remove the rear brake pad ④.



e. Use a tool to push the piston all the way in the direction of the arrow. If the resistance is very large, you can refer to the method of adding brake fluid to the front brake master cylinder, remove the upper cover, and then push. If the spring clip on the caliper falls off, it needs to be reinstalled in the direction shown in the figure.

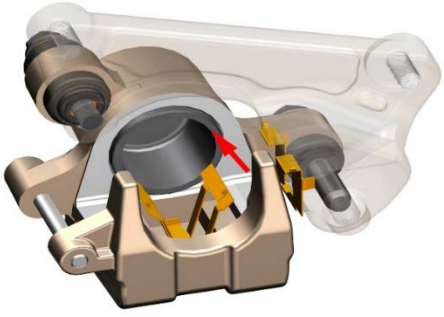

f. Grasp the outer brake pad with your left hand, insert

the pin shaft ③ with your right hand, and be careful not to insert it all the way. After installing the inner brake pad in place, insert the pin shaft all the way and use a 5# hexagon socket to lock the pin shaft ③. Note that it must not be installed backwards; the grooved side faces the brake disc, and the black metal backplate faces the caliper.

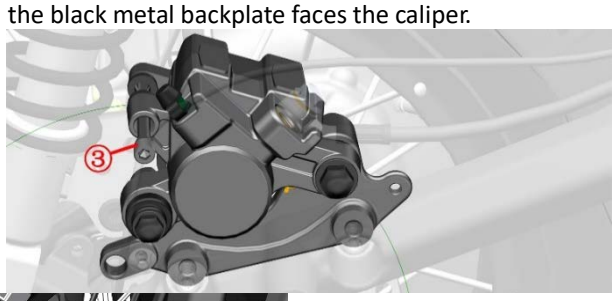

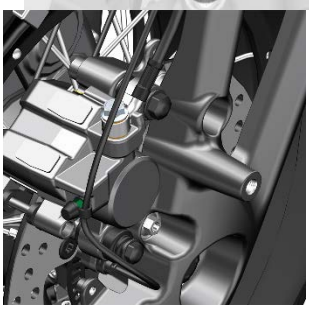



g. After adjusting the brake pads to the correct position, reinstall bolt ① and tighten it with a 10# socket. Reinstall according to the disassembly method. (Use a 14# socket for early production models and a 10# socket for later production models)

5.3 Brake Pad Abnormal Noise

The main reasons for abnormal noise in brake pads are as follows:

a. Brake pads are worn to the limit. If they are new brake pads, check whether there are foreign objects caught between the brake disc and the brake pads. Normal operation can be restored after replacing the new brake pads or removing the foreign objects.

b. Used non-original brake pads with excessive hardness; replace them with original parts.

c. Brake disc bolts are loose, tightening the bolts can restore normal operation.

d. Brake system failure, such as rust on the caliper sliding shaft causing non - reset; incorrect installation of brake pads and spring plates. Remove rust or reinstall correctly.

e. The brake disc runout exceeds the tolerance, and replacing it with a new one can restore normal operation.

6、Replace the brake disc

DANGER

●The vehicle must be parked on a flat and stable ground or lift platform.

●After replacing the brake disc, brake pads, or reassembling the front and rear wheels, the brake lever must be repeatedly operated until the brake restores its braking effect.

●Contaminated disc brake rotors and pads will reduce braking effectiveness. Please replace the pads with new ones and clean the contaminated brake rotors.

DANGER

●Do not operate the brake lever after the brake disc or rim assembly has been removed.

●New brake discs should be checked for runout ≤0.08mm (0.003 in) before assembly.

6.1 Replace the front brake disc

Refer to the steps for disassembling the front wheel assembly described in the "Front Fork Assembly" section of this manual to remove the front brake disc.

6.2 Replace the rear brake disc

a. Refer to "Bolts and Nuts of the Muffler" to remove the rear section of the muffler.

b. Remove the dust cover ④ of the rear wheel output shaft, squeeze the rear brake handle, and use a 21# socket to remove the rear wheel M16×1.5 nut ③ (the reinstallation torque is 125 N.m).

c. Refer to "Disassembled Disc Brake Caliper" to remove and secure the rear caliper properly to prevent air from entering the braking system due to improper operation.

d. Refer to "Replace Rear Shock Absorber", and remove the bolt ② that secures the connection between the right rear shock absorber and the frame.

e. After removing the two bolts ① that secure the rear swingarm using a 14# socket (use a 13# socket for ETC) (reassembly torque is 55 N.m), remove the rear swingarm assembly.

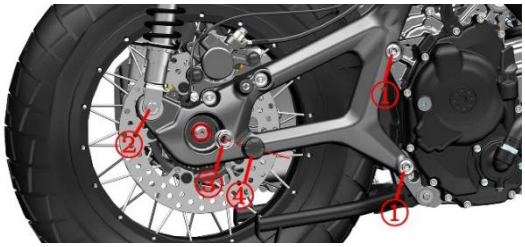

f. Remove the rear wheel as shown in the figure below.

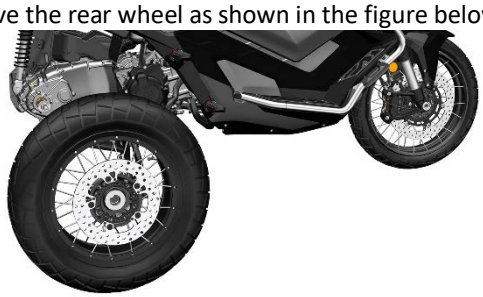

g. Replace the rear brake disc.



h. Use a T45 slotted Torx hexagon socket wrench to remove the bolts securing the disc brake rotor assembly, then remove it.

i. Restore according to the disassembly sequence. Note that bolts with torque requirements need to be calibrated to the standard values.

Brake hose

Notice:

●This inspection should be completed by a qualified maintenance unit .

● Inspect the brake hose regularly according to the maintenance period table .

●It is recommended to replace the brake hose every 4 years .

Refer to steps 1 and 2 of inspecting brake accessories in the brake system. You can use an endoscope with LED to inspect the oil pipe joints of the ABS hydraulic control unit and the main pump, or remove the corresponding covering parts for inspection.

Brake fluid

Notice:

●This inspection should be completed by a qualified maintenance unit .

● It is strictly forbidden to flush the main pump directly with high-pressure water .

● After disassembly, make sure all parts are reinstalled correctly.

● It is strictly forbidden to mix water, dust, impurities, and silicate or petroleum liquids, otherwise it will cause serious damage to the brake system.

●This vehicle uses DOT 4 brake fluid and it is forbidden to mix it with other brake fluids.

●You need to wear protective gloves / protective clothing /protective eyes /protective mask.

● Brake fluid must be used promptly after opening, and be sealed and moisture-proof during storage; it is recommended not to exceed 1 month. Poor quality or damp brake fluid will have adverse effects on the brake system, and in severe cases may cause brake failure.

● Avoid dripping brake fluid onto the painted surface of covering parts or the surface of components . If accidentally splashed, rinse with clean water immediately .

⚠DANGER

● If brake fluid is swallowed by mistake, contact a poison control center or hospital immediately; if it gets into eyes, rinse with clean water and seek medical attention immediately.

● Keep brake fluid away from children and pets.

● The vehicle must be parked on a flat, stable ground or a lift.

1. Add brake fluid to the front and rear disc brake master cylinders

a. Take adding brake fluid to the front disc brake master pump as an example. The steps for adding fluid to the rear brake master pump are the same.

b. Place the vehicle in a horizontal position.

c. Wrap the main pump with oil-resistant plastic film to prevent brake fluid from dripping onto the surface of components and damaging the paint layer.

d. After wearing waterproof gloves, use a cross screwdriver to remove the bolts ①, and take off the upper cover ②, cover plate ③, and sealing gasket ④.

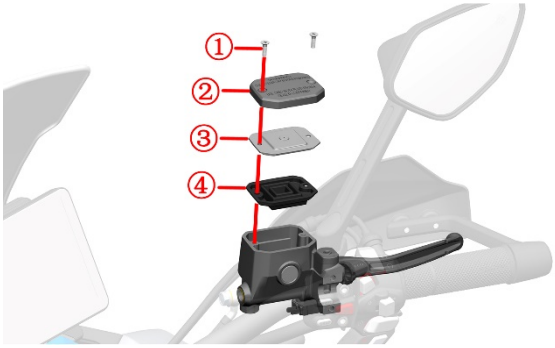

e. Use a brake fluid water content tester to measure the water content. If it is > 2%, replace all brake fluid ; if it is ≤ 2 %, add newly opened DOT 4 brake fluid to 3/4 of the transparent observation window of the front disc brake master cylinder. The recommended water content should be less than 1.5 %. This vehicle is factory-added with TOTAL Total HBF 4 (DOT 4) Brake fluid.



The above picture is a brake fluid water content tester. The picture comes from the Internet and the copyright belongs to the original author. Please do not use it for other purposes.

f. Clean away any foreign matter before reassembling.

2. Replace brake fluid

Refer to the steps for adding brake fluid on the previous page. If the water content is > 2%, the brake fluid needs to be replaced. This inspection should be done every 4,000 kilometers (2,485 miles) or every 15 months. It is recommended to replace the brake fluid every 2 years. If the brake fluid is not replaced for a long time, flocs will form and block the oil pipe , the oil hole of the disc brake master pump or the piston, causing the braking effect to deteriorate or fail, thereby affecting driving safety.

2.1 Replace the front brake fluid

a. Wrap the front brake master cylinder with oil-resistant plastic film as shown in the previous section.

b. Remove the rubber cap of the bleed nozzle① and put on a 8# plum wrench. Put a 6mm (0.23 in) hose into the bleed nozzle②, and be careful not to remove the plum wrench.

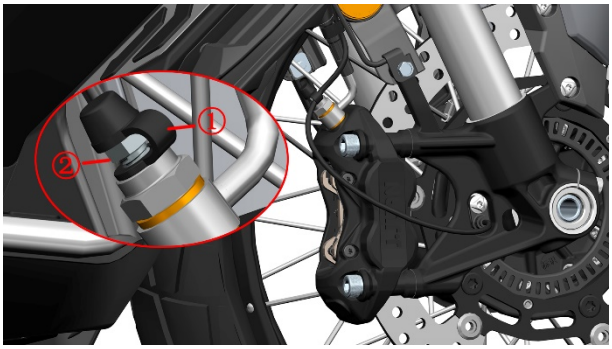

c. Place the other end of the hose into the oil container.

d. Refer to the steps for adding brake fluid on the previous page to remove the upper cover of the front brake master cylinder.

e. Use your right hand to rotate the 8 # plum wrench counterclockwise to loosen the bleed nozzle, and use your left hand to slowly and evenly squeeze the front brake handle to the bottom and keep it still. Tighten the bleed nozzle clockwise and then slowly loosen the handle. Pay close attention to the fluid level of the front brake master pump. If it is too low, add it in time to prevent bubbles from entering the brake hose. Repeat the previous steps until transparent and clean light yellow brake fluid flows out.

f. Observe whether the liquid level of the main pump is at the 3/4 position of the transparent inspection. If not, add liquid or draw out or discharge it with a syringe.

g. After replacing the brake fluid, unplug the 6mm (0.23 in) hose and tighten the bleed nozzle to the standard torque of 10 Nm (1 kgf.m, 7 lbf.ft) with a torque wrench. Then put the rubber cap back on the bleed nozzle.

h. Reinstall the main pump cover.

i. Repeatedly squeeze and release the brake handle to check whether the brake returns to normal hydraulic resistance.

⚠WARNING

● The discharged waste brake fluid must be properly handled and is prohibited from being used. It is prohibited to dump it at will to pollute the environment; or to place it at will. It should be properly disposed of by a qualified recycling unit.
● The steps for draining the brake fluid must be strictly followed and not confused; avoid bubbles entering the brake pipe.
●Pinch and release the brake handle slowly and evenly to avoid air bubbles entering the brake line.
The brake handle can only be released after the bleed nozzle is locked in place. Half-locking is prohibited; and do not use excessive force.

2.2 Replace rear brake fluid

Replace the rear brake fluid by referring to the steps for replacing the front brake fluid.

3. Exhaust of brake system

If the brake handle feels soft and the braking performance is significantly reduced , first check whether the brake fluid level of the main pump is below the "LOW" line and whether the brake system is leaking. If the problem still exists after eliminating the above two items, try to bleed the brake fluid. The bleed operation is similar to the previous operation of replacing the brake fluid. When replacing the brake fluid, clean, transparent, light yellow brake fluid should flow out steadily, while the bleed operation will cause foamy brake fluid to flow out.

bleeding is completed, check whether the brake fluid level of the main pump meets the standards.

⚠WARNING

● The discharged waste brake fluid must be properly handled and is prohibited from being used. It is prohibited to dump it at will to pollute the environment; or to place it at will. It should be properly disposed of by a qualified recycling unit.
● During operation, pay close attention to the fluid level in the main pump and replenish it in time to prevent air from entering the brake hose.

Tire

⚠DANGER

● Check the condition and tire pressure of the tires before driving .
●When the tire is worn to the limit or has cracks or scratches on the surface, it should be replaced in time .
●When using new tires, you must pay special attention to driving safety. New tires that have not been run-in may slip and cause the vehicle to lose control.
● Avoid sudden acceleration , sharp turns, emergency braking, etc. within 150 kilometers (93 miles) after replacing new tires.
The standard front tires of this vehicle are 110 / 70-17 and the rear tires are 150 /70-14. When replacing tires, you should use standard tires. Using non-standard tires may cause problems.
●It is not recommended to use external patching to repair tires . You need to remove the tire for internal patching. External patching can be used for temporary emergency, but you should reduce the speed of the vehicle and go to the maintenance unit for internal patching as soon as possible. If the sidewall is hit, punctured, or scratched, and the tread is damaged and has a large hole, it should be replaced directly. Dynamic balancing should be performed again after the tire is repaired.

⚠WARNING

● Check tire pressure regularly. The standard is 230 kPa (2.35 kgf/cm2, 33.4 PSI) at normal temperature, and 230 kPa (2.35 kgf / cm2 , 33.4 PSI) for the rear wheels. The maximum tire pressure in cold state shall not exceed 300 kPa (3.1 kgf/cm2 , 44 PSI).

●When you find that the tire pressure has dropped, you should check whether there are nails or small holes in the tire; whether the side of the rim has been deformed or cracked due to collision.
● When using a tire changer to remove a tire, be careful to avoid the valve stem . Be careful to protect the contact area between the rim and the tire lip. If scratched, it may cause air leakage.
● Too high tire pressure will reduce the contact area with the ground, which may cause slipping and loss of control , and it is also more likely to cause tire blowouts in summer . Too low tire pressure will cause steering difficulties, accelerate wear, increase engine load and increase fuel consumption.
● Frequent exposure to the sun can cause tires to crack and age. It is recommended to park the vehicle in a dustproof, sun-proof, and ventilated place; or cover the vehicle with a motorcycle cover to protect both the body parts and the tires. If the vehicle is not driven for a long time, the vehicle should be supported firmly and the tires should be suspended to avoid deformation caused by long-term load at the contact point with the ground.

●Tire self-filling fluid should not be used because it may clog the air holes of the tire pressure monitoring sensor, causing difficulty in inflation or tire pressure monitoring failure.

1. Check the tires

a. Park the vehicle on a flat and stable ground or a lifting platform and lower the main bracket.



b. Support the front wheel with a suitable tool so that the front tire is suspended in the air, then rotate the tire and carefully check if there are any abnormalities, such as uneven wear, nail punctures, cracks, etc. Clean the small stones or other foreign objects embedded in the tread. Check if the tread and sidewall have been worn to the mark. If they are nearly worn to the mark or have been worn to the mark, replace them with new tires of the same specifications in time. Use a tire pressure gauge to measure the tire pressure when the tire is cold, and add or deflate it to the standard value.



of the raised wear mark on the tread is 1.6mm (0.06 in). The triangle mark (△TWI) on the sidewall indicates the position of the wear strip . If the wear reaches the mark point, it means that the wear has reached the limit. Continuing to drive will be a safety hazard and you must replace the tire with a new one of the same specification.

c. The inspection of the rear tire is the same as that of the front tire and will not be repeated here.

2. Replace tires

a. Replace the front tire

Refer to the steps for disassembling the front wheel assembly in the "Front Fork Assembly" section of this manual to remove the front wheel assembly. Use a tire remover to remove the tire. When removing the tire, be careful to avoid the valve position. Do not use a crowbar to pry open the tire at the valve position to avoid damaging the tire pressure sensor. Before pressing the tire, install it according to the rotation direction indicated on the sidewall, and align the yellow mark lightly with the valve position. After replacing a new tire or repairing a tire, you need to re-do dynamic balancing to avoid front wheel shaking due to imbalance that affects the driving experience.



b. Replace the rear tire

Refer to "Bolts and Nuts of the Muffler" to remove the rear section of the muffler.

Remove the dust cover of the rear wheel output shaft, squeeze the rear brake handle, and use a 21# socket to remove the M16×1.5 nut of the rear wheel (the reinstallation torque is 125 N.m).

Refer to "Disassembled Disc Brake Caliper" to remove and secure the rear caliper properly to prevent air from entering the braking system due to improper operation.

Refer to "Replace Rear Shock Absorber", and remove the bolts securing the connection between the right rear shock absorber and the frame.

Use a 14# socket (13# socket for ETC models) to remove the two bolts securing the rear swingarm (reassembly torque is 55 N.m), then remove the rear swingarm assembly.

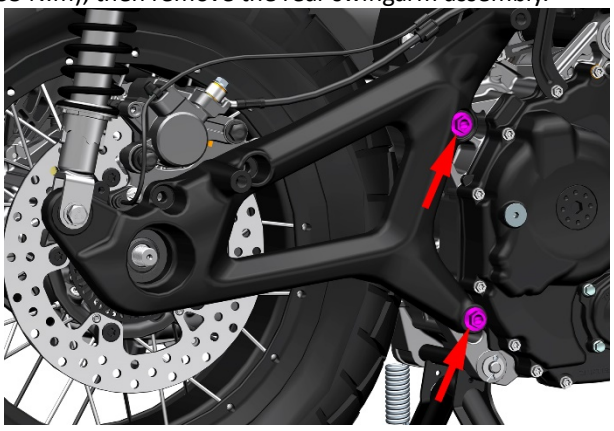

Use a tire changer to remove the tire. When removing, be careful to avoid the valve stem position—never use a tire iron to pry the tire at the valve stem, as this could damage the tire pressure sensor. Before mounting the tire, install it according to the rotation direction indicated on the sidewall, with the yellow-marked light point aligned with the valve stem. After replacing the tire or repairing a puncture, the wheel must be re-balanced to prevent rear-

wheel vibration caused by imbalance, which affects the driving experience.

Steering mechanism

Attention：

●Regularly inspect the steering mechanism according to the requirements of the regular maintenance schedule.

●Park the vehicle on a flat and stable ground or lift platform, and lower the main support.

●If the clearance of the steering mechanism is too small, it will lead to inflexible steering and accelerate bearing wear. If it is too large, it will cause driving jitter and abnormal noise when braking.

1、Check the steering mechanism

a. Support the front wheel with appropriate tools to keep the front tire suspended, then turn the steering handle left and right to confirm whether the rotation is flexible and smooth; check whether there are signs of pulling on the cables and wires.

b. Keep the front wheel suspended, shake the front wheel assembly in multiple directions (front, back, left, and right), and confirm whether there is axial play or radial looseness in the front fork assembly.



2、Adjust the steering mechanism

If steering is inflexible or loose, the axial bearing clearance should be adjusted.

a. Refer to the section "Replace the Lower Triple Clamp" in the "Front Fork Assembly" chapter of this manual to remove the upper triple clamp. Since it involves relatively difficult disassembly steps, it is recommended to visit a qualified dealer for adjustment.

b. To facilitate the explanation, other components are omitted here. First, use a hook wrench with a thickness of 38-42 within 6mm (0.24 in) to loosen the adjusting nut (1a); then move the lock washer (2) upward and loosen the adjusting nut (1b).

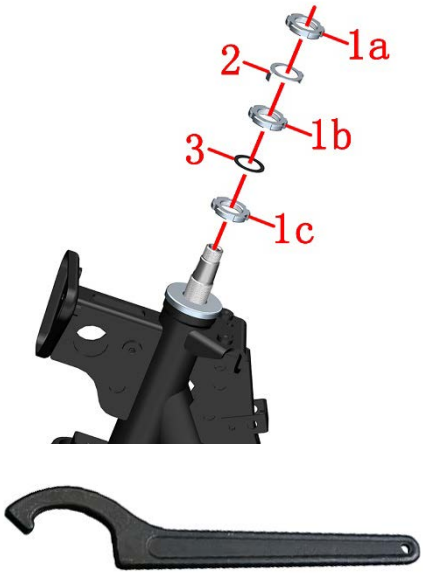

c. If the steering is heavy, loosen the adjusting nut (1c) counterclockwise. First, tighten it clockwise to 35 N.m (3.6 kgf.m, 26 lbf.ft), then loosen it counterclockwise by 1/4 turn, and then tighten it to the following torque: 15 N.m (1.2 kgf.m, 11 lbf.ft) .

d. If there is any looseness, directly tighten it clockwise to 35 N.m (3.6 kgf.m, 26 lbf.ft), then loosen it counterclockwise by 1/4 turn, and then tighten it again to the specified torque: 15 N.m (1.2 kgf.m, 11 lbf.ft).

e. After adjustment, confirm whether the steering has returned to normal. If it has returned to normal, rotate the nut (1b) clockwise until it contacts the rubber pad (3), then align the lock washer (2) with the grooves of nuts (1b) and (1c). tighten the nut (1a) to 100 N.m (10.2 kgf.m, 74 lbf.ft).

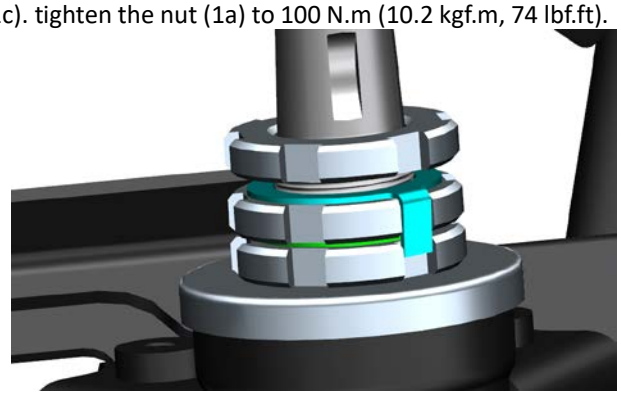

f. With the front wheel suspended, straighten the handlebars, and gently push and pull the handlebars by hand to feel whether the steering mechanism is smooth without jamming. When the front fork assembly is slightly deflected to one side, it should be able to slowly deflect to the end under its own weight; if it deflects quickly to the end, readjustment is required.

3、Maintain the steering bearing

If adjusting the steering bearing clearance fails to restore normal operation, the steering bearing must be removed to check for wear, rust, lack of grease, etc., on the bearing and race.

Refer to the steps for replacing the lower yoke in the "Front Fork Assembly" section of this manual; they will not be repeated here.

4、Fault

Turn the handle in the normal direction. If it feels strenuous, the following causes need to be checked:

a. Check if the steering mechanism is too tight, and refer to the previous steps for adjusting the steering mechanism to resolve it;

b. The steering mechanism bearing is rusted, and the race or steel ball is damaged, requiring replacement after disassembly;

c. The front tire pressure is insufficient and needs to be inflated to the standard tire pressure. Under normal temperature conditions, the standard is 260 kPa (2.7 kgf/cm², 37.7 psi), and for the front wheels, it is 240 kPa (2.5 kgf/cm², 35 psi);

d. The lower connecting plate column is deformed and needs to be removed and replaced.

Front fork

Notice:

● Every 8000km (4971mile), check whether the front fork is leaking or deformed, and whether the shock absorber rebound is normal.

● Before each ride, check whether the front shock absorber has leakage and whether the fasteners are loose to ensure driving safety.

● Torque of bolts at the hollow shaft of the front wheel of the shock absorber bottom tube : 20N.m (2.0 kgf.m, 15 lbf.ft).

● When replacing hydraulic oil, use kerosene or diesel to thoroughly clean all parts and use a measuring cylinder to measure 497 ± 5ml (16.8 ± 0. 17 US oz , 17.5 ±0. 18 lmp oz , 30.3 ±0. 3 cu-in) Pour 10W hydraulic oil at one time to avoid mixing different hydraulic oils.

●After driving on dusty or muddy roads, foreign objects on the front fork tube (exposed chrome-plated section of the barrel) should be cleaned promptly to avoid scratching the dust seal or oil seal and causing leakage ; it can be wiped clean with a soft cloth .

●Never use a high-pressure water gun to wash the dust seal directly at close range .

● If the vehicle is not driven for a long time , it should be parked in a ventilated and dry environment. A dark and humid environment will easily cause the front fork tube to rust and other parts of the vehicle to rust. The front shock absorber should be maintained more frequently in coastal areas than inland areas. After wiping it clean, a small amount of anti-rust oil can be sprayed to prevent rust.

1. Check the appearance

a. After parking the vehicle firmly, let the front wheel hang in the air, turn the handlebar to check if there is leakage on the front shock absorber; check if there are scratches, pits , rust, etc. on the surface of the front fork tube . Shallow scratches, small pits, and slight rust can be smoothed with fine sandpaper of about 2000 mesh. Wipe clean the dust or foreign matter on the dust seal.



b. Check the bottom of the drum for paint peeling; check the front fender , front wheel hollow shaft and front brake caliper mounting points for signs of breakage or cracking . Check the bottom of the drum for leakage.



c. If there is a lot of hydraulic oil on the front fork tube, wipe it clean and then ride and observe. If there is no oil stain or slight oil stain, it is the hydraulic oil accumulated during the assembly of the dust seal , and it can be judged that the oil seal is not leaking. If there is a small amount of oil stain or oil sludge mixture , remove the dust seal and wipe the surface of the front fork tube and the oil seal clean , compress the front shock absorber once, wipe it clean, and then compress it again ; repeat the above operation 10 times . Observe whether there is still oil on the front fork tube . If there is, the front shock absorber is leaking and the dust seal and oil seal need to be replaced. If there is no oil stain, it is a normal phenomenon that a small amount of hydraulic oil has accumulated during assembly .

d. Use a mirror or mobile phone camera to check if there is any leakage at the bottom of the bottom tube . If there is slight leakage, first check if the bolts are loose . The bolt torque here is 20 ~ 26N.m (2 ~ 2.7 kgf.m, 15 ~ 19 lbf.ft). If there is still leakage after tightening , replace the gasket .



2. Check shock absorption performance

Hold the front brake handle and press down the direction handle firmly. After releasing it , it should be able to compress smoothly and then return to normal. Repeat the operation several times to check . If there is any blockage, remove the shock absorber for inspection. If there is a collision with the front wheel or high-speed crossing, check whether the shock absorber is deformed. Check the shock absorber performance according to the maintenance period

table. Prevent the vehicle from rolling over during operation .

3. Disassemble the front shock absorber

"Front Fork Assembly " of this manual to remove the front shock absorber.

4. Correct the front fork tube

If the front wheel of the vehicle passes over a bump at high speed or after a collision, check whether the front fork tube is deformed. Take the left shock absorber as an example. Use the end face of the shock absorber bottom tube at the front wheel axle and the end face of the front fender mounting point to fix the shock absorber ; or remove the front fork tube . Use a dial indicator to detect the deformation of the front fork tube in the axial direction , and rotate the front fork tube to measure different positions.

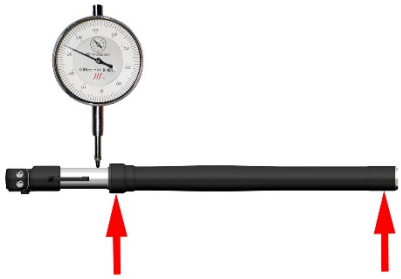

For slight deformation of less than 0.2 mm (0.008 in), the front fork tube can be supported by a V -shaped iron block and soft glue or rubber, copper sheet, etc. can be placed on the contact surface to prevent scratches on the front fork tube. Use a press to slowly straighten it with small pressure and small stroke for multiple times , and measure while straightening. The radial runout after correction should be less than 0.05 mm (0.002 in) . If the original bent and deformed part loses roundness after correction, it should be replaced . If the deformation is too large, the shock absorber should be replaced.

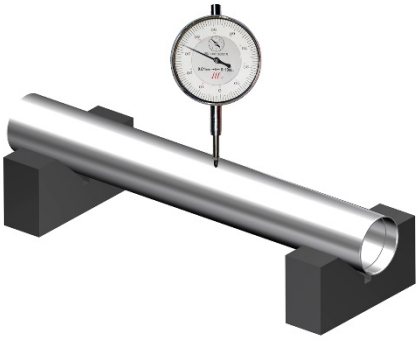

5. Troubleshooting

a. If there is a noticeable knocking sound when driving on an uneven road or during emergency braking , the following items need to be checked:

Whether the shock absorber spring is broken or the elastic force is reduced ;

Whether the hydraulic oil is insufficient or air has entered ;

Is there too much hydraulic oil ?

Check whether the spring is axially bent and rubs against the front fork tube .

b. If the shock absorption is too strong , check the following items:

Is there too much hydraulic oil ?

Whether the front fork tube is bent or deformed;

Have the springs been modified ?

c. If the shock absorber is too soft, check the following items:

Whether the hydraulic oil with low viscosity has been replaced ;

Whether the spring force decreases ;

Is hydraulic oil too low?

Rear Shock Absorber

Attention：

●If there is a large amount of sediment adhering to the rear shock absorber, it should be cleaned promptly to prevent large stones from scratching the chrome-plated parts and causing rust.

●Non-professionals must not disassemble the rear shock absorber by themselves.

●should be maintained according to the regular maintenance schedule.

1、Check

a. One person should right and steady the vehicle, while another presses the rear handrail from behind to observe whether the rear shock absorber can smoothly return to its original position.

b. Check if the shock absorber bolts are loose.

c. Grasp the upper part of the shock absorber spring and rotate it radially; it should be able to rotate slightly. Check the bottom using the same method. If the upper part cannot rotate, it indicates that the rubber buffer sleeve of the shock absorber has aged and failed; if the bottom cannot move, it means that the buffer sleeves on the rear swing arm and engine case have failed and need to be replaced. The buffer sleeves on the engine case and rear swing arm are available for sale on the Shengshi official website, while the buffer sleeve on the rear shock absorber needs to be purchased through other channels.

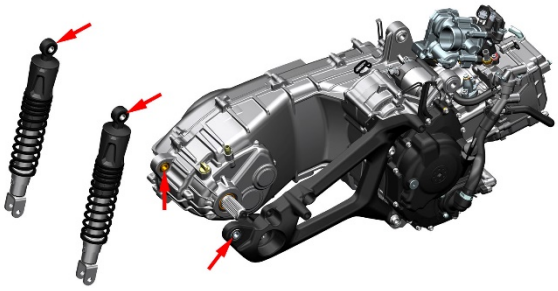

d. Check if there is any leakage at the weld of the shock absorber bottom.

2、Adjust preload

24 models：

The rear shock absorber equipped on this vehicle can be adjusted according to the owner's needs. The preload can be freely adjusted, and the rebound damping adjustment range has 7 levels. After supporting the vehicle with the main stand and leaving the rear wheel hanging, use a No. 3 hexagon wrench to loosen the locking screw of the preload adjustment seat, then turn the preload adjustment seat to

adjust the spring preload. Turning it in the H direction compresses the preload length of the spring, making the shock absorber stiffer; conversely, it makes the shock absorber softer. Turning the rebound damping in the "+" direction increases the damping (stiffer), turning it in the "-" direction decreases the damping (softer), and the standard damping position is 4 levels in the "-" direction after turning it all the way in the "+" direction. Note: Both rear shock absorbers need to be adjusted to the same level.

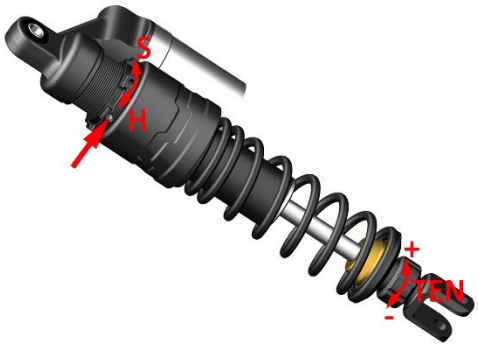

ETC：

The rear shock absorbers equipped on this vehicle can be adjusted according to the owner's needs. They are sorted into 5 levels, with level 1 being the softest and level 5 the hardest. Prop up the vehicle with the main stand, let the rear wheel hang in the air, then turn in the H direction to compress the preload length of the spring, making the shock absorber stiffer; conversely, it will become softer. The two rear shock absorbers need to be adjusted to the same level. An adjustment wrench should be used for adjustment, or an appropriate method should be selected. Be careful to prevent pinching injuries during operation.

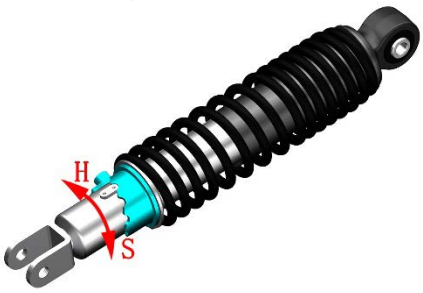

3、Replace the rear shock absorber

The steps of G250/368/368 (ETC) are similar to those of G368, taking G368 (ETC) as an example.

a. Use a pick to remove the plug of the left rear shock absorber bolt.

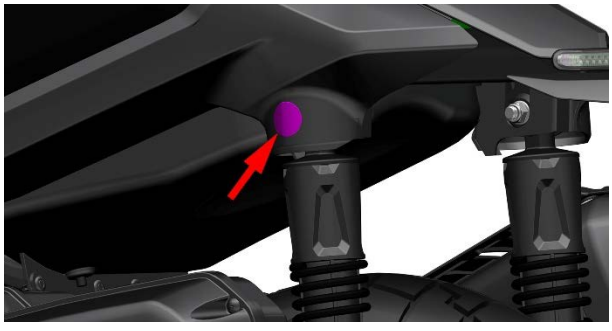

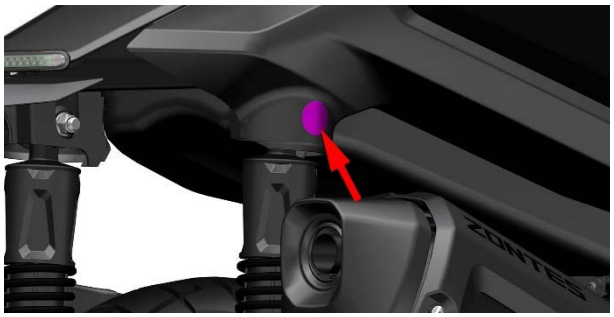

b. Refer to the section on replacing the engine air intake filter element and remove the air filter decorative cover.

c. Use a 14# socket to secure nut (2), a 13# socket (14# socket for G250/368) to remove bolt (1) (torque 50±3 N.m), and a 16# socket (14# socket for early G250/368, 16# socket for later models) to remove bolt (3) (torque 24±2 N.m), then the rear shock absorber can be removed. It is recommended to remove one side and install it before removing the other side; do not remove both sides simultaneously.

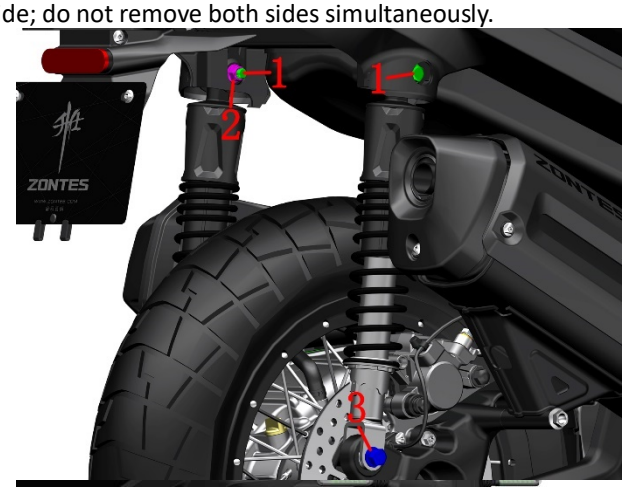

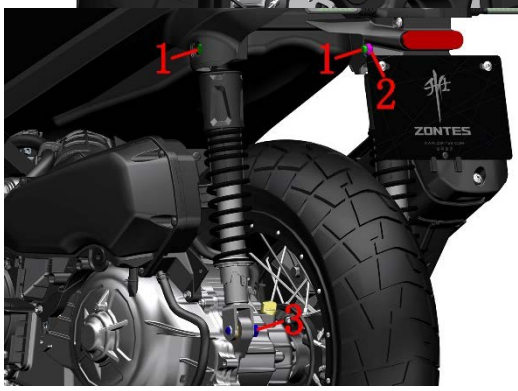

Bolts and nuts for body and engine installation

Attention：

●Regularly check the body fasteners according to the maintenance cycle schedule.

●Loose engine fasteners can cause increased vibration and affect the driving experience.

●The steps for G250/368/368 (ETC) are similar, taking 368G as an example.

1、Check fasteners at critical parts

Check whether the front disc brake caliper bolts, front shock absorber bottom tube bolts, lower yoke bolts, rear swing arm to engine connection bolts, rear wheel spline shaft nuts, rear disc brake caliper bolts, and side stand nuts are loose. Check whether the cotter pin of the main stand shaft is abnormal.



24 款

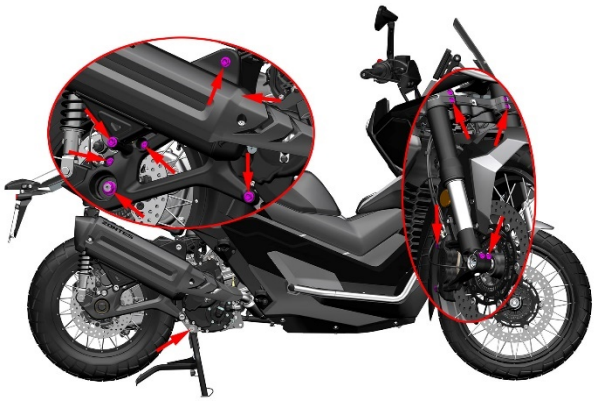

ETC

2、Check engine fasteners

Standard torque for the 5 M12 nuts on the engine cradle: 65 N.m (6.6 kgf.m, 48 lbf.ft). Tools: 14# socket, 17# socket.

a. Remove it by referring to the steps for removing the seat cushion and rear storage box, and check whether the 5 nuts securing the engine rear swingarm shown in the illustration are loose.

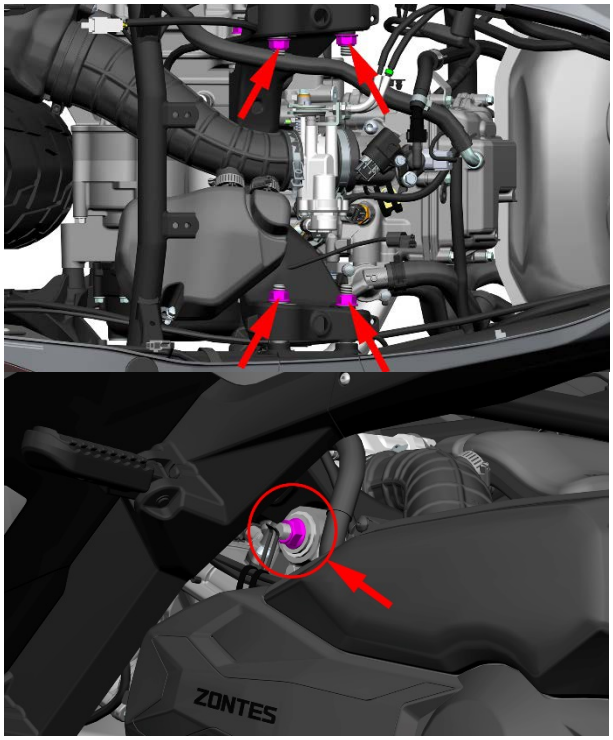

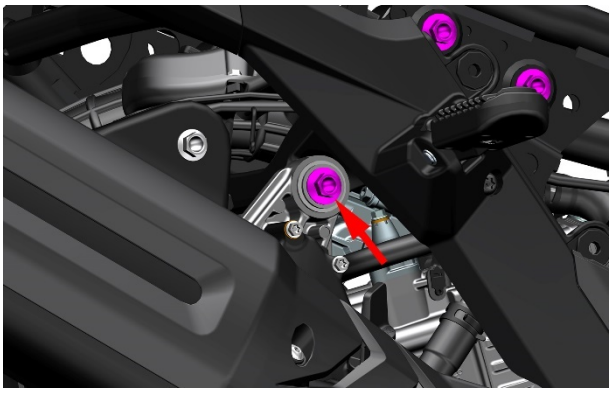

b. Refer to the steps for removing the seat cushion, rear storage box, tail skirt, and fuel tank cover to remove the cover parts until reaching the level shown in the illustration (i.e., the level where the bolts securing the rear swingarm are exposed), and then re-tighten the 4 securing bolts.

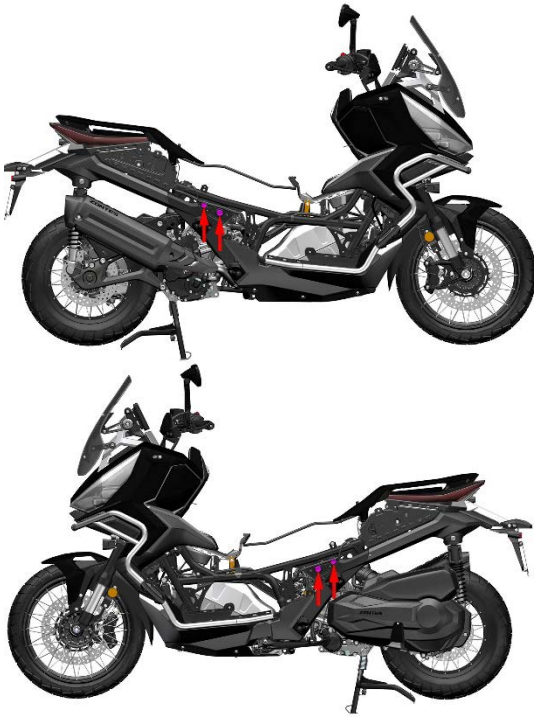

Side Bracket - Complete

Notice

●Park the vehicle on a flat and stable ground or a lifting platform and lower the main bracket .

When removing or installing the spring, prevent the spring from flying off suddenly and causing personal injury.

1. Inspection



1. Side stand 2. Side stand spring 3. Side stand flameout switch

① is the parking position ② is the driving position

a. Check whether the side bracket spring is damaged and whether the elastic force is normal.

b. Check whether the side stand rotates normally. When it turns to the angle shown in Figure 1, it should be able to automatically turn to the parking position under the spring force ; when it turns to the angle shown in Figure 2, it should be able to automatically turn to the driving position. If necessary, remove the side stand for lubrication.

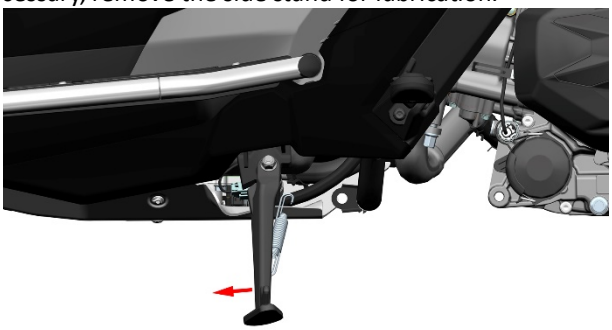



c. Check whether the shutdown switch functions normally

should not be able to be started when the side stand is lowered (parking position) ; the vehicle should not be able to be started when the side stand is retracted (driving position) without pinching the front or rear brake handle ; the vehicle should automatically shut down when the side stand is lowered after starting the vehicle, otherwise the shutdown switch or brake switch needs to be checked .

d. Check whether the side bracket mounting plate is deformed or cracked.

2. Lubrication

a. Fold up the side bracket and put the spring in the shortest position for easy disassembly.

b. You can use thick steel wire to roll it into a circle and put it into the spring (1) hook . Be careful to ensure that the steel wire does not loosen or spread out during the pulling process .

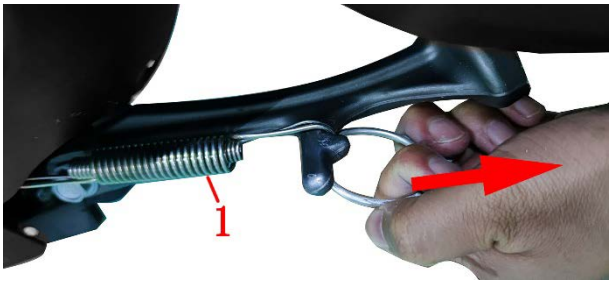

c. Grasp the side bracket with one hand and pull it in the direction of the arrow with the other hand to remove the spring .

d. Lower the side bracket, remove the bolt (4) with a 8 # socket or a plum wrench , and take out the gasket (3) and the flameout switch (2).

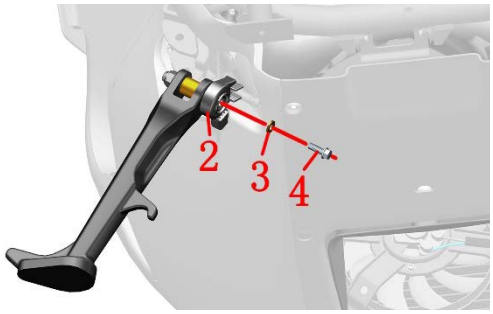

e. Use a 14 # sleeve to secure the bolts on the inside and a 14 # sleeve to remove the nuts on the outside.

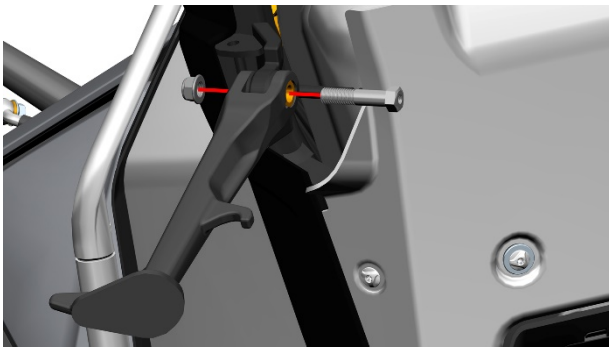

f. Remove the side stand bushing from the frame.

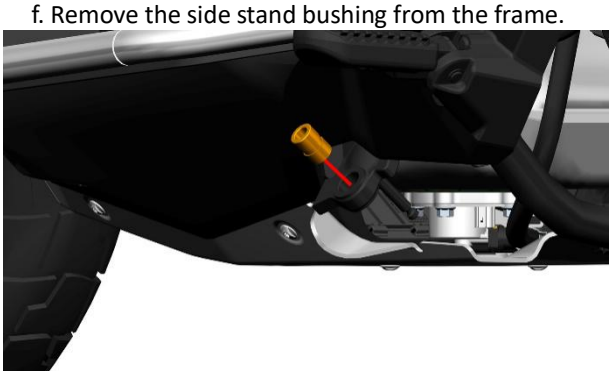

g . Use diesel or kerosene, or a clean rag to wipe off the remaining grease. Apply a proper amount of grease to the two mounting surfaces inside the side bracket and the outer surface of the bushing , and try not to apply it to the threaded holes.



Main bracket

Notice

●Park the vehicle on a flat, stable surface or a lift and lower the side stand .

When removing or installing the spring, prevent the spring from flying off suddenly and causing personal injury.

1. Inspection

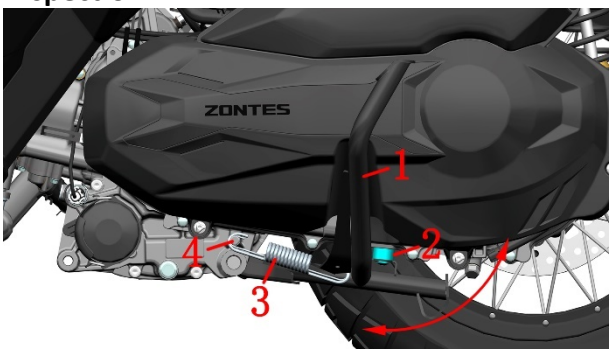

1. Main bracket 2. Buffer rubber 3. Main bracket spring 4. Main bracket reset spring column

a. Straighten the vehicle, step on the force-saving rod of the main bracket with your foot , and check whether the spring force is normal . The main bracket should be able to quickly return to the driving position under the action of the spring's own elastic force .

b. Check whether the buffer rubber is aged and ineffective.

c. Check whether the main bracket return spring column is deformed.

d. Check whether the main bracket has obvious deformation and whether the welding parts are cracked.

2. Lubrication

a. Keep the main bracket in the stowed position, use pliers to remove the retaining spring (1) on the right side , and remove the gasket (2). Knock out the main bracket shaft (3) from right to left . Note that protective measures must be taken at the main bracket spring to prevent the main bracket spring from suddenly loosening and flying out, causing personal injury. You can use hard objects to cover it, or tie the spring with ropes or thin wires.

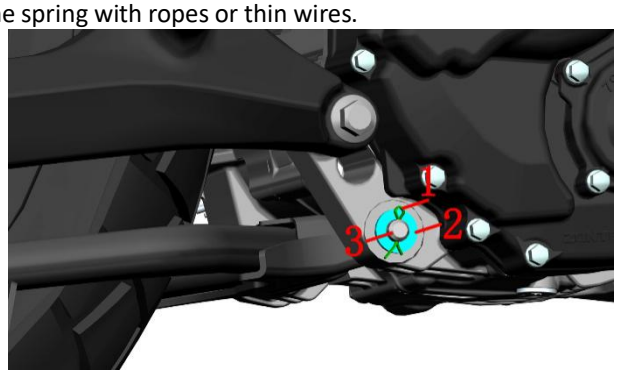

b. Remove the spring from the main bracket .

c. Apply an appropriate amount of grease to the end face , inner hole of the engine case bushing and the surface of the main bracket shaft.

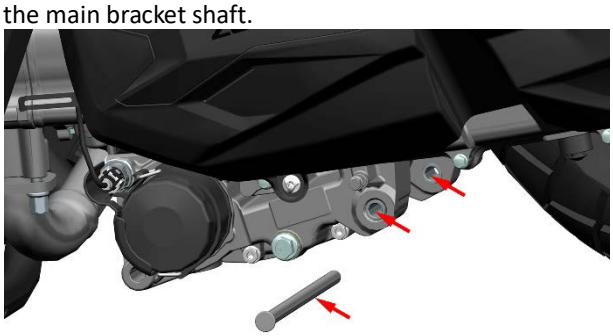

3. Install the main bracket

First align the main bracket with the mounting hole, and then insert the main bracket shaft from the left side . After inserting the gasket , insert the split pin and bend the two legs of the split pin to both sides to prevent it from falling off .

Hang the main bracket spring onto the main bracket first , and then use a cross screwdriver to hang the spring onto the main bracket return spring column.

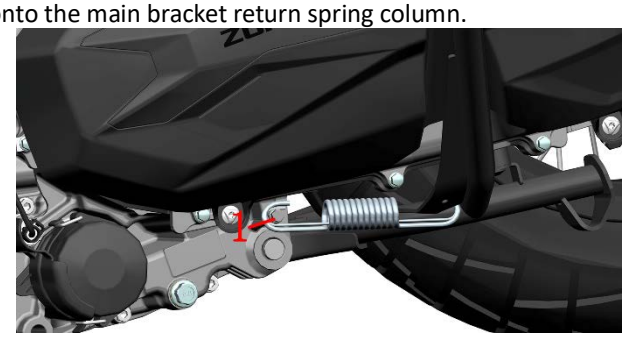

4. Replace the main bracket reset spring column

according to the previous steps, use an 8 # socket to remove the main bracket return spring column counterclockwise . It is recommended to apply an appropriate amount of thread fastener before assembly . Torque : 12 Nm (1.2 kgf.m , 9 lbf.ft).

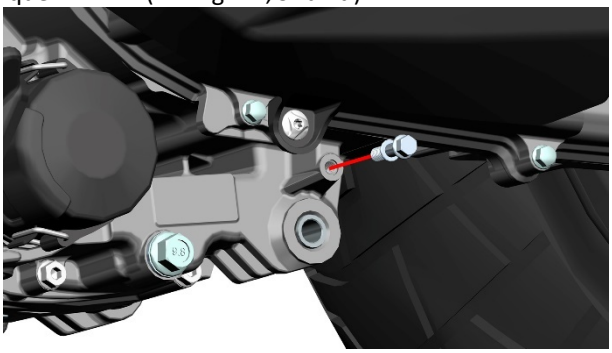

Sound, light and electrical device inspection

Notice:

● Before driving, check whether all vehicle lights are working properly, including turn signals, tail lights, brake lights, headlights , etc. Check whether the horn is working properly and whether the windshield is rising or falling normally.

1. Inspection

368G、250G

For details of all vehicle lamps, please refer to the lamp distribution diagram in the vehicle information of this manual.

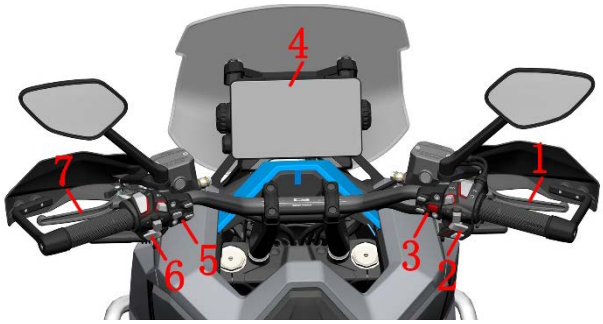

1. Front brake handle 2. Right handle switch 3. Right auxiliary switch 4. Instrument 5. Left auxiliary switch 6. Left handle switch 7. Rear brake handle

a . Park the vehicle on flat ground or on a lifting platform, lower the main stand , and fold up the side stand.

b. Press the unlock button on the right auxiliary switch

①After unlocking and powering on the vehicle , make sure the ignition switch is turned to " ", hold the front or rear brake handle, and press the start button.

②Start the engine.

③Light switch : Keep it in the " ● " position , check whether the front position lights, rear position lights and license plate lights are on normally ; pull it to " " to check whether the handlebar backlight, headlight, front position lights, rear position lights and license plate lights are all on .

⑤ ECO button: Press the instrument and "E" will light up. Press it again and "S" will light up . The two modes can be switched freely .

⑥SEAT: Press to check whether the seat lock opens normally.

⑦TCS : By default, TCS is on . Press and hold the button to switch between off and on.

⑧Electric heated handlebar button: For detailed instructions, see the driver's manual included with the vehicle.（This function is only available for models with heated handle.）

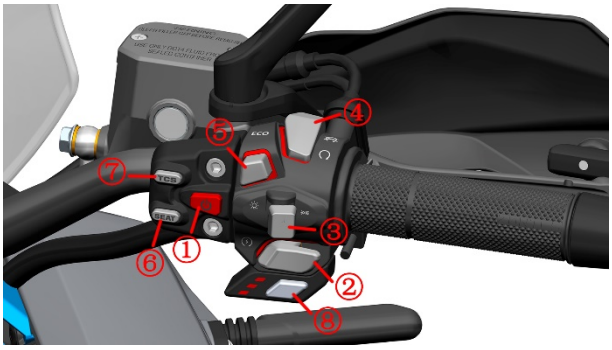

c . Test the left switch button . If you need to know more about the functions of each button, please refer to the driver's manual . Here we only briefly explain how to test whether it is normal.

①SET button : Short press SET to enter the main menu /confirm the selection . Long press to return to the main interface. Do not operate this button while driving the vehicle.

②MOD button : Select the next item. Do not operate this button while driving the vehicle.

③Fog lamp switch : Press to turn on the fog lamp switch, and the fog lamp logic is controlled by the fog lamp driver.

Fog light control logic

When the fog lights are off, short press the switch to illuminate white light, and long press the switch to illuminate yellow light.

After the fog lights are turned on, short press the switch and the fog lights will cycle through white light → white light flashing → yellow light . Long press the switch to turn off the fog lights .

④Hazard warning lights: Press to make the 4 turn signals flash, press again to turn them off. Traffic regulations must be followed and they should not be used except in emergency situations .

⑤ Horn : Press the horn once to confirm whether the sound is clear and loud.

⑥ Steering switch: Push it all the way to the right to check whether the right front and right rear turn signals are flashing normally ; press the turn signal to turn it off; push it all the way to the left to check whether the left front and left rear turn signals are normal.

⑦ Dimming switch : Pull it to " " to check whether the high beam is on and the high beam indicator on the instrument is on at the same time. Pull it to " " to check whether the low beam is on. Traffic regulations should be followed to use high and low beams reasonably .

⑧ Overtaking warning light switch : Pressing it when the low beam is on will turn on the high beam .

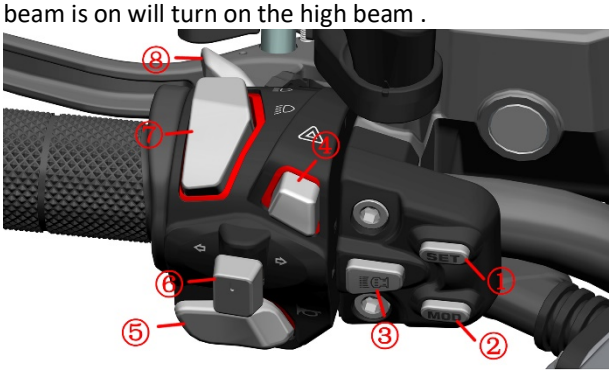

d. Check the battery voltage

After removing the front panel, use a multimeter to measure the battery voltage. If it is lower than 12V, use the charger provided with the vehicle to charge it in time. Be careful not to overcharge or over-discharge , and the charging voltage of the charger should not be higher than 15V. If the vehicle is not used for a long time , it should be charged regularly according to the requirements of the driver's manual . If the battery fails, it should be handed over to a professional recycling agency for proper disposal . Do not discard it at will to avoid polluting the environment.

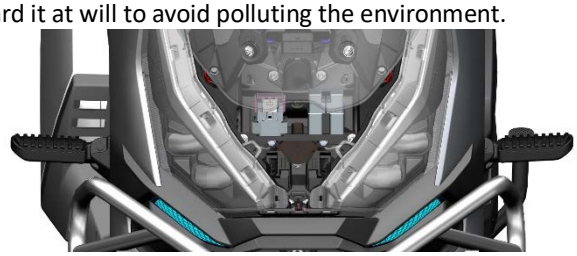

ETC:

For all vehicle lighting, please refer to the "Lighting Distribution Diagram" in the Vehicle Information section of this manual.

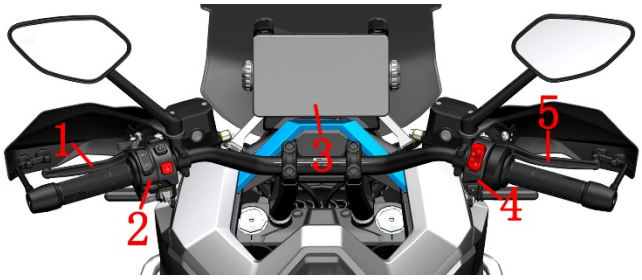

1.Rear Brake Lever 2.Left Handlebar Switch 3.Meter 4.Right Handlebar Switch 5.Front Brake Lever

a.Park the vehicle on a level surface or lift platform. Deploy the main stand and retract the side stand.

b.Press the unlock button on the right switch

①With the vehicle unlocked and powered on, confirm the engine stop switch④Ensure the switch is set to "🔄"position. Squeeze the front or rear brake lever, then press the start button to crank the engine.
②Light Switch: Press shortly to turn on the lights. Before pressing, check that the front position, rear position, and license plate lights illuminate. After pressing, check that the handlebar backlight, headlight, front position, rear position, and license plate lights are all on.
③M Switch: Only functions when the engine stop switch is pressed. Press the M switch to illuminate the 'T' indicator on the meter. Press it again to switch to the 'S' indicator.



c.Left handlebar switch button test

For a more detailed understanding of the functions of each button, please refer to the Driving Manual. Here is only a brief explanation of how to test whether it is normal.

① High/Low Beam & Pass Switch:Pull and press the switch to the "≡D" position and check that the high beam lights up, and the corresponding high beam indicator symbol on the meter lights up simultaneously. Return the switch to the "≡D" position and check that the low beam is on. Use high and low beams appropriately in compliance with traffic regulations.
② SEAT Button:Press shortly to open the seat lock.
③ Cruise Control Switch: Only operable while driving (see the user manual for details).
④ Fog Light Switch: Press shortly to turn on the fog lights. The fog light logic is controlled by its driver. Do not turn on the fog lights for a long time while idling, as it may cause voltage alarms.⑤Hazard Warning Lights: Press to turn on 4 turn signals flashing, press again to turn off. It should comply with traffic regulations and should not be used except in emergency situations.
⑥ Turn Signal Switch: Push the switch fully right to check if the front and rear right turn signals flash properly. Press the switch to cancel. Push the switch fully left to check if the front and rear left turn signals flash properly.
⑦ Horn: Press to sound the horn once. Confirm the sound is clear and audible.
⑧ OK Button & Toggle Directional Keys: Press and hold to enter the main menu. Press shortly to confirm selections or move the cursor up, down, left, or right (please refer to the user manual for details).



d. Check the battery voltage

After removing the front panel, use a multimeter to measure the battery voltage. If it is lower than 12V, use the charger provided with the vehicle to charge it in time. Be careful not to overcharge or over-discharge , and the charging voltage of the charger should not be higher than 15V. If the vehicle is not used for a long time , it should be charged regularly according to the requirements of the driver's manual . If the battery fails, it should be handed over to a professional recycling agency for proper disposal . Do not discard it at will to avoid polluting the environment.

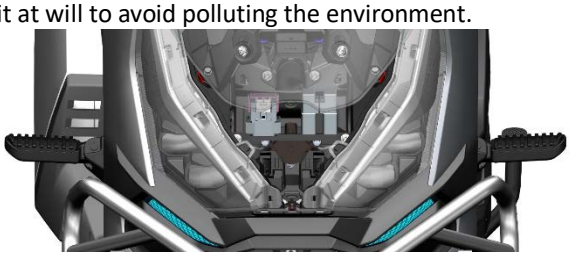

Attention:

●Before driving, check whether all vehicle lights, including turn signals, taillights, brake lights, headlights, etc., are functioning properly, as well as whether the horn is working properly.

Charging method

main cable has an OBD interface . For details on its location, see the official website assembly video "ZT368T-G Charging Port, OBD Interface, and Fuse Box Location Instructions" . Remove the expansion pins at the bottom of the right storage box cover, and you can see it after removing it.

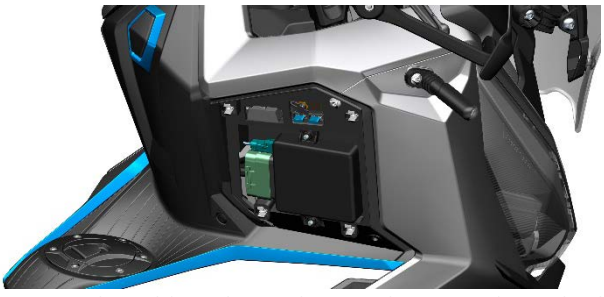

Open the rubber plug and insert the original standard charger DC plug. Then plug the AC socket into a 110-220V power source. If the battery is damaged by using a low-quality charger, it is not covered by the warranty.



●Note: When reassembling the battery or fuse, be sure to reset the EFI hardware. For detailed instructions , see the service information in this chapter.

2. Headlight height adjustment

Notice

● Headlight height that is too high or too low will affect safe driving. The headlight height should be adjusted reasonably according to the presence or absence of passengers and the weight change of the driver.
to adjust the light height on a flat road with a straight-line distance of about 150 meters at night without affecting traffic safety .

a cross screwdriver with a rod diameter of 6mm (0.24 in) and a length of 150-200mm (6-8 in) to penetrate the dimming hole from the bottom to the top , align the dimming bolt serrations , and rotate counterclockwise to lower, and vice versa to raise . For specific methods, please refer to the "ZT368T-G Headlight Height Adjustment Video Tutorial" in the assembly video of the corresponding model.

3. Fuse box

Notice:

●If the fuse blows, it must be replaced with a fuse of the same specification . It is prohibited to use wires such as copper or iron wire for direct connection .

●If the fuse blows again after replacement, you need to check the entire vehicle cable fault before replacing it.

●This vehicle uses a small fuse , about 11mm (0.43in) wide , 17mm (0.67in) long, and 4mm (0.16in) thick .

●You can use the buzzer function of a multimeter to connect the exposed metal part of the upper part of the fuse to determine whether it has blown , or use a tool to unplug it and observe .

"ZT368T-G Charging Port, OBD Interface, and Fuse Box Location Instructions" in the corresponding vehicle assembly video to remove the left decorative cover of the fuel tank lock to find the fuse box. Open the fuse box cover and check whether the fuse is normal.

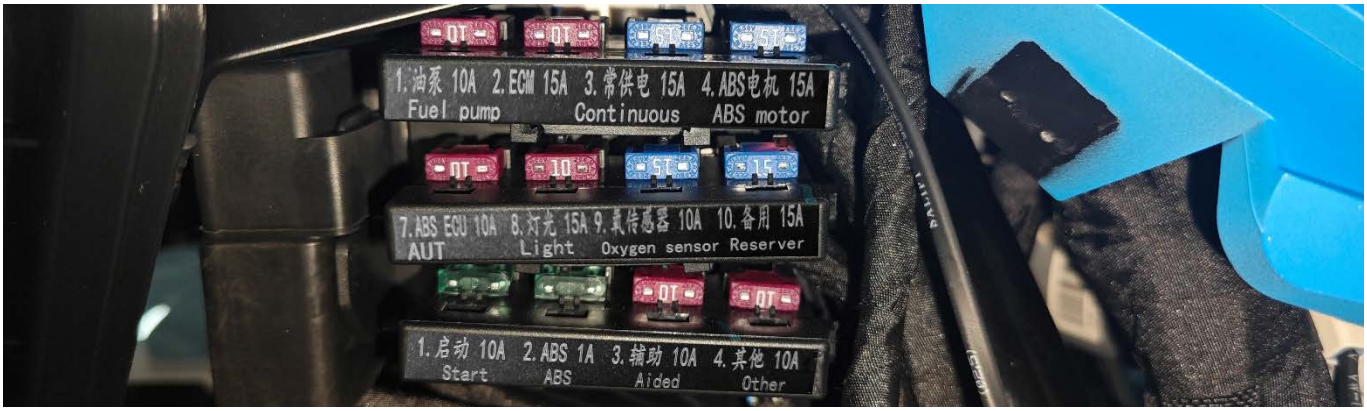



4. Troubleshooting

If the button cannot be pressed, it can be directly judged that there is a problem with the switch. If there is no response when pressing, it is necessary to judge whether there is a problem with the switch, circuit or electrical component itself .

4.1 Right-hand switch

a. Press the start button and there is no response :

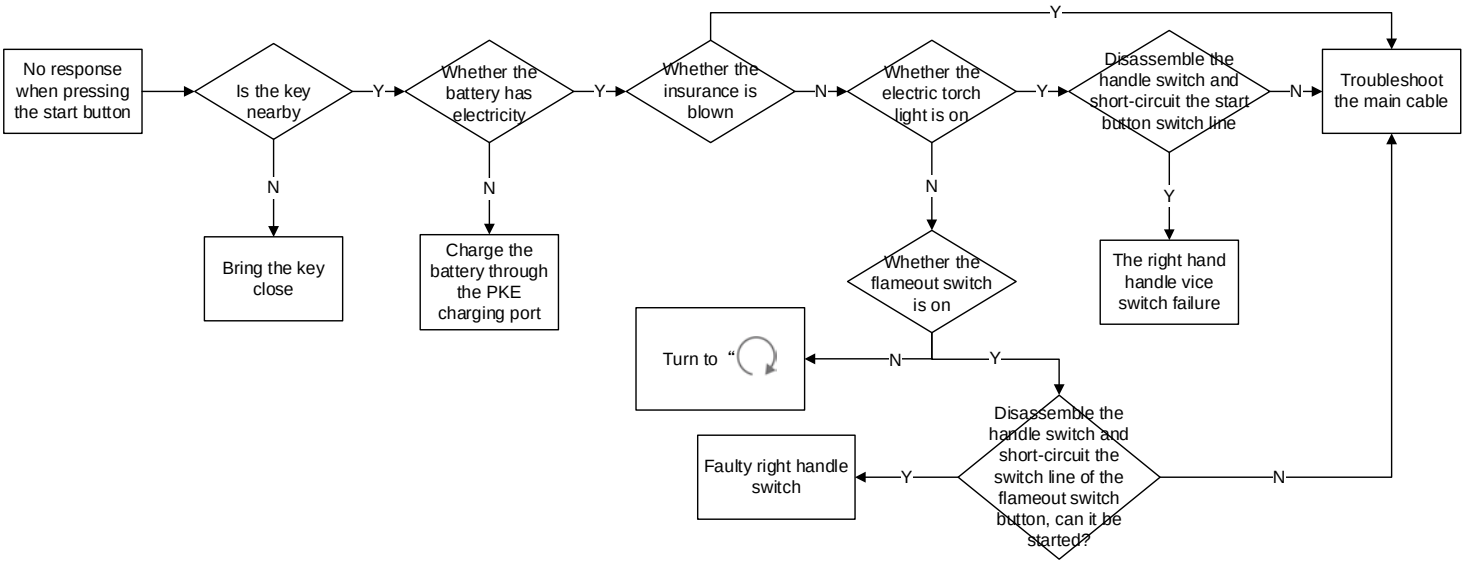

b. If the headlights do not light up when the light switch is turned to " " , check whether the light fuse is blown. If so, check for cable faults. If normal , remove the handle switch to short-circuit the light switch wires. If they light up, it is a switch fault. Otherwise, check for cable or headlight faults.

c. If pressing the ECO button fails to switch to "E"/"S" mode , disassemble the switch and short-circuit the ECO button switch line. If it lights up , it is a switch failure. If it does not light up, check the instrument or cable for failure.

4.2 Right-hand handle auxiliary switch

a. No response at startup

If the engine cannot be started , refer to the previous " No response when pressing the start button " steps to troubleshoot.

b. " SEAT" button failure

If the battery is dead and it is inconvenient to charge or the seat lock fails and cannot be opened, you can fill in the quality feedback form and ask the engineer to guide you on how to manually open the seat. For safety reasons, this manual does not provide this method.

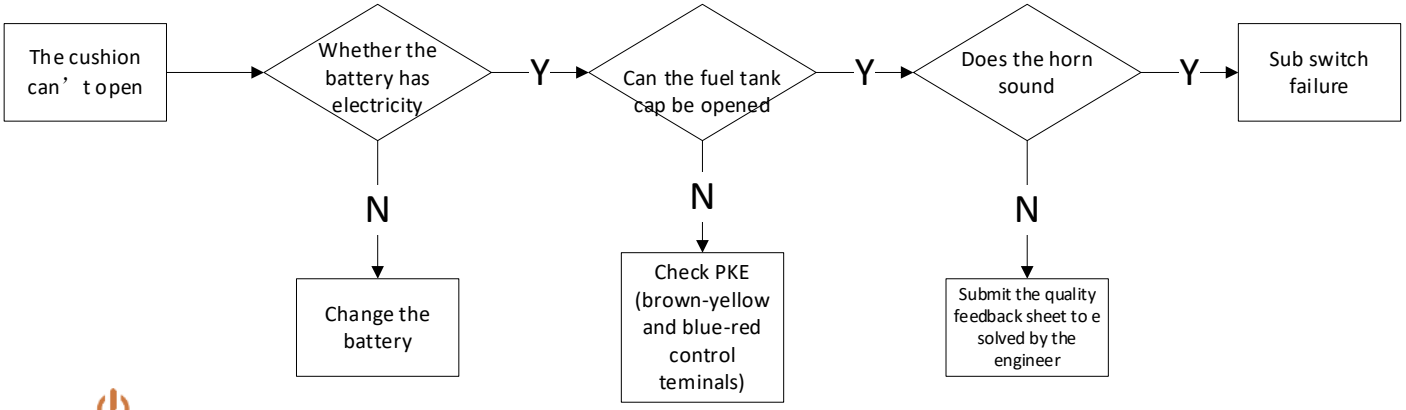

c. " " No response

The driver's manual contains a detailed description of the PKE function , including how to start the vehicle in an emergency when the induction key runs out of power, and the specific meaning of the buzzer tone . I will not repeat it here .

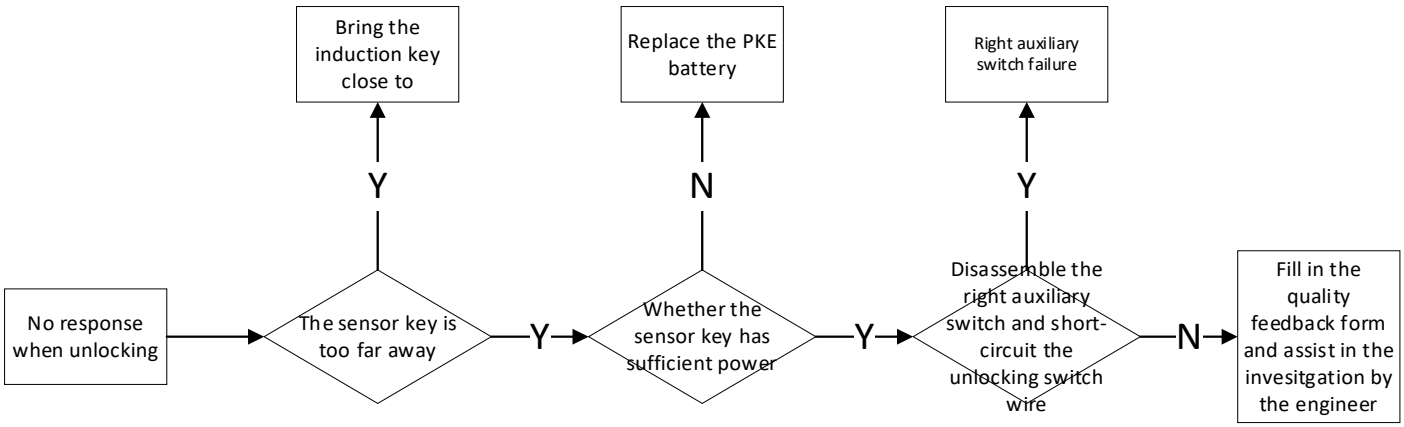

4.3 Left handlebar switch

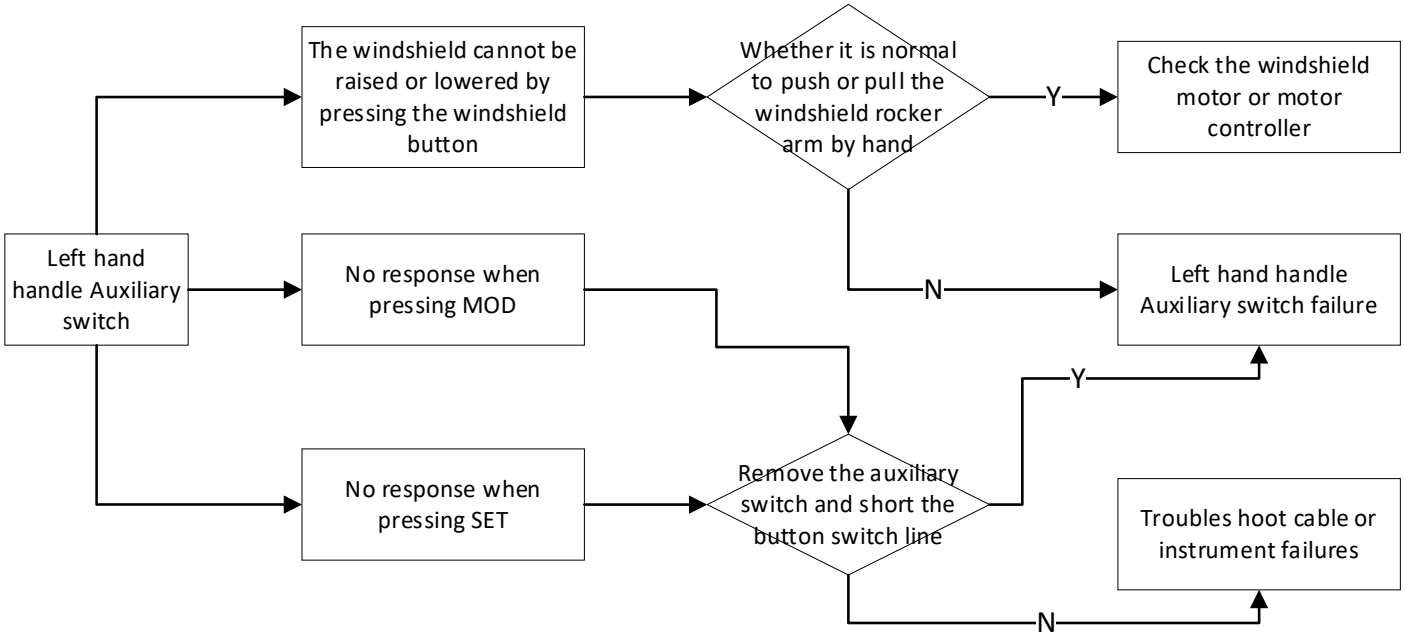

4.4 Speakers

Notice:

● When adjusting or checking the horn , the interval should be more than 5 seconds . Continuous sounding may cause the internal coil of the horn to burn out .

●The speaker is riveted and difficult to restore after being disassembled .

●The bracket nut ③ is prohibited from being adjusted.

a. If the horn switch does not respond, refer to the next page for the left handlebar switch troubleshooting process.

b. Abnormal speaker sound

If the sound is low or hoarse , first check whether the battery is sufficient. You can turn on the headlights and judge whether the battery is sufficient by the brightness of the light . If the sound is normal when starting the engine and increasing the speed , but abnormal at low speed , it can also be judged that the battery is insufficient. The battery needs to be charged.

If the battery is sufficient, check whether the speaker adjustment bolt ① and nut ② are loose. If they are loose, tighten them and check again. If the fault cannot be eliminated after tightening , try to loosen the nut ② and then use a cross screwdriver to fine -tune the bolt ① . If the speaker does not sound, turn it counterclockwise about 270 degrees . If it is hoarse , turn it clockwise until the sound is normal ; tighten the nut ② after the sound is normal . If the fault persists , it is judged that the speaker is faulty and needs to be replaced.




①
②
③

4.5 Left handle switch

The left-hand switch controls the turn signal, horn, high and low beam lights , hazard warning lights , and overtaking lights. There are many lines, making it difficult to check .

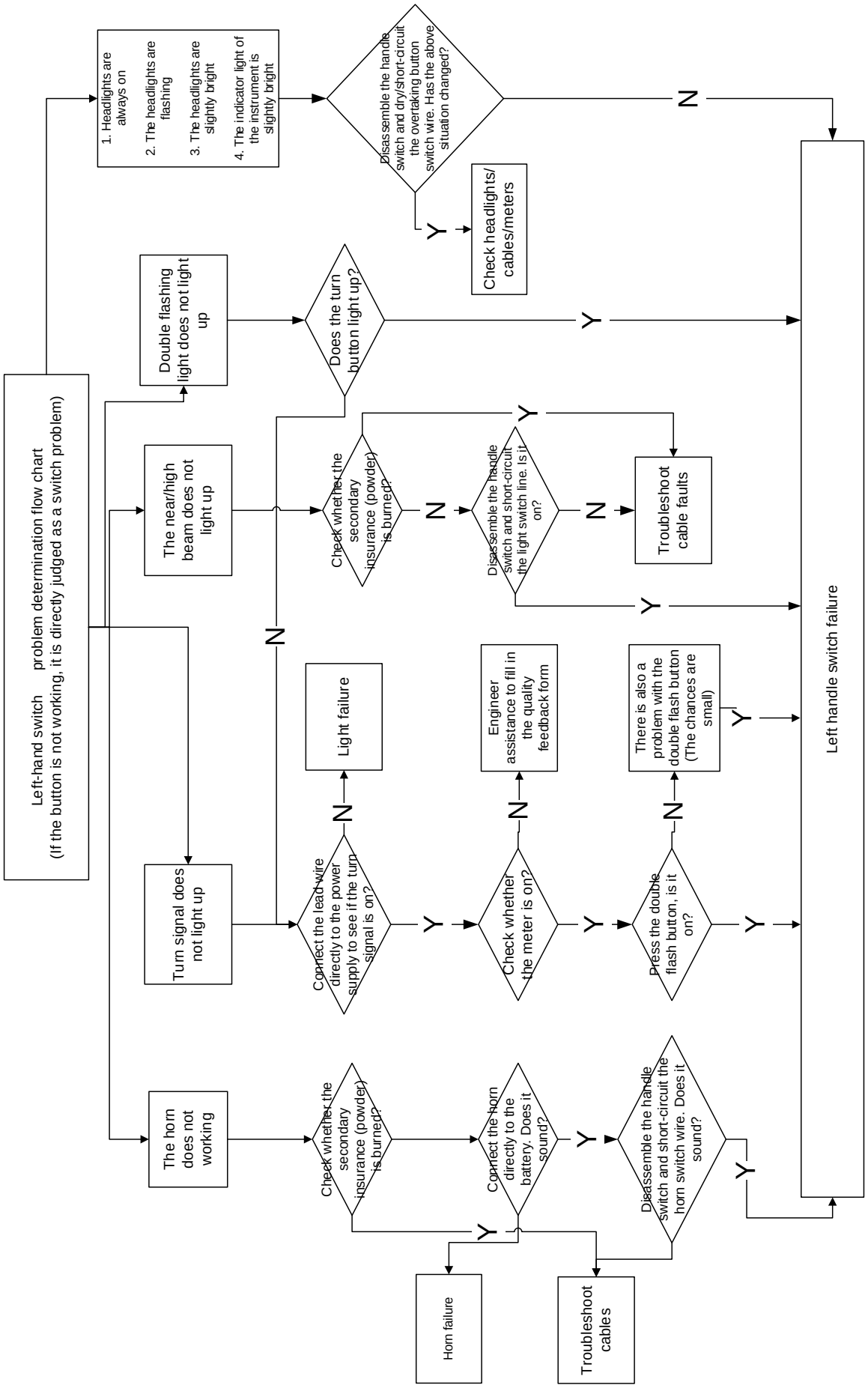

4.6 Lamps

Notice:

● When using wires to test lamps, be careful to distinguish between positive and negative poles. For detailed wire colors, please refer to the electrical schematic diagram in the driver's manual that comes with the vehicle .

The troubleshooting method for lamps is basically the same. You can first directly lead the wire to the battery with a battery. If the lamp is normal, you need to check the cable or switch failure. If it is not normal, it is a lamp failure. The lamps on this vehicle are all LED, and the lamp housing is generally ultrasonically welded or sealed with glue. The waterproof performance will be invalid after disassembly .

●There are ventilation holes reserved on the lamp . When the ambient humidity is high , water mist may form inside the lamp , which generally does not affect the use . It will disappear automatically when the humidity drops.

● The surface of the lamp should be kept clean. You can wet it with clean water and then wipe it gently with a clean soft cloth . After each wipe , the soft cloth should be moved to another position or cleaned with clean water . If you wipe it directly, the remaining fine sand may scratch the surface of the lamp.

lamp troubleshooting:

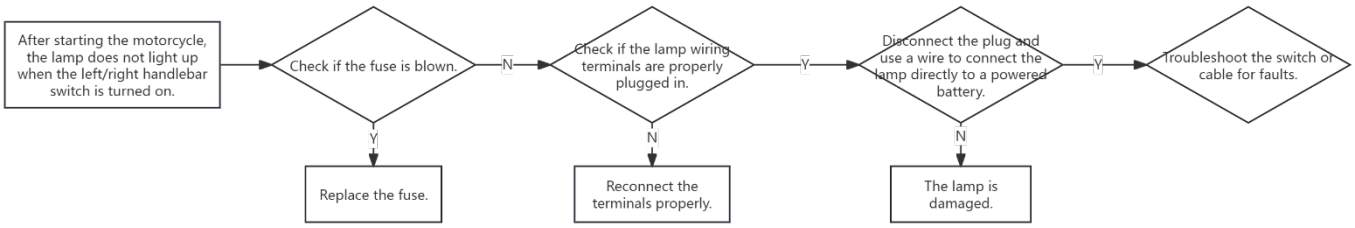

3. Electronic fuel injection system

Notice before service

1. The structure and working principle of the EFI system are relatively complex. Before checking and troubleshooting, you need to have a certain understanding of the working principle and structural characteristics of each EFI system . The content of this chapter requires certain maintenance experience . It is recommended to go to a qualified maintenance unit for inspection or maintenance.
2. Please keep the fuel in the fuel tank at least 3 L (3.17 US qt, 2.64 lmp qt, 0.79 US gal, 0.66 lmp gal), otherwise it will affect the normal operation of the electronic fuel injection system. Please add fuel as soon as instrument display is 1 grid.
3. Before starting the vehicle for the first time after it has been parked for more than 3 hours, you should first power on the vehicle, turn on the ignition switch " " and wait for the fuel pump to complete fuel pressurization before starting the vehicle.
4. If the start fails several times, the cylinder may be flooded. You need to turn the throttle to the bottom and press the start button for 3 seconds to perform the cylinder cleaning procedure.
5. If the low battery voltage indicator flashes, the battery should be charged in time ; too low voltage may cause the electronic fuel injection components to not work properly, fail to start or start with difficulty, insufficient power, etc.
6. When reinstalling the battery , when there is a sudden power outage during driving , when the idling speed is abnormal, when replugging the fuse, etc., the EFI system needs to be reset. The specific method is as follows:
   a. Unlock the vehicle and raise the main stand;
   b. Press the brake and start the vehicle;
   c. Increase the engine speed to over 3000 rpm ;
   d. After releasing the accelerator, turn off the ignition switch and lock the vehicle;
   e. Wait for 5 seconds and then unlock the vehicle again to reset the EFI system.
7. When checking or troubleshooting the EFI system, please note:
   a. After power is turned on, do not remove components connected to the 12V power supply at will to avoid the coil in the appliance generating self-inductance and causing instantaneous voltage to damage the ECU or sensor.
   b. Do not blindly dismantle and inspect when a fault occurs . Make sure the mechanical part is normal before checking the electronic control part.
   c. When diagnosing a fault, give priority to using a diagnostic instrument to read the fault code or determine the fault code based on the flashing frequency of the fault indicator light , and conduct targeted inspections.
   d. Check whether the EFI components are oxidized and whether the connections are reliable.

tool:

MST-500P diagnostic instrument	PT300 EFI diagnostic instrument (16PIN)	multimeter
		

● Both diagnostic instruments can read fault codes ; the PT300 diagnostic instrument can be flashed with programs.

8. The driving conditions and maintenance status of each vehicle are different, so it is impossible to list all the fault phenomena and troubleshooting procedures. Only some of the more common faults can be listed. The maintenance personnel themselves also need to have certain professional knowledge and experience accumulation process.
9. If there is a " " symbol on the right side of the step , you can click it to quickly jump to the corresponding step.

WARNING

● For new vehicles or vehicles that are about to run out of fuel, do not turn on the shutdown switch. Be sure to add enough fuel before turning it on, otherwise the fuel pump will run idle without oil and cause damage.
● Do not plug or unplug the plugs of the components at will, and do not clean the plugs directly with water. Be sure to check whether they are plugged back in correctly after plugging or unplugging .

Fault Codes

Notice:

●Unlock the vehicle and turn on the ignition switch. It is normal for the EFI fault light to be on when it is not started. If it is not on , the vehicle cannot be started.

● If the fault light comes on after starting the vehicle, indicating an EFI fault, it means there is something wrong with the EFI system.

●When the EFI system reports a fault, continuing to drive the vehicle may cause damage. Please contact a qualified maintenance unit or our authorized maintenance point for inspection in a timely manner .

1. Read the fault code through the instrument

When the engine is running, if the instrument EFI fault indicator light " " is on, it means that there is a fault in the EFI component that needs to be eliminated.

read the fault code in the ZONTES Smart APP .

Shengshi Smart APP QR code

2. Read the fault code through the diagnostic instrument

Power on the vehicle, remove the cover of the storage box and the OBD protective cover , connect the diagnostic instrument to read the fault code . The color of the OBD plug may be different in different batches. There are two colors, black and white, and the functions are the same.

368G、250G

Code	illustrate	Code	illustrate
P0030	Upstream 1 cylinder oxygen sensor heating control circuit open	P0116	The engine coolant temperature sensor signal is unreasonable
P0031	The voltage of the upstream cylinder 1 oxygen sensor heating control circuit is too low	P0117	Engine coolant temperature sensor circuit voltage is too low
P0032	The voltage of the upstream cylinder 1 oxygen sensor heating control circuit is too high	P0118	Engine coolant temperature sensor circuit voltage is too high
P0106	Intake pressure sensor/atmospheric pressure sensor is unreasonable	P0122	Throttle position sensor circuit voltage is below the limit
P0107	Intake air pressure sensor short circuit to ground	P0123	Throttle position sensor circuit voltage exceeds limit
P0108	Intake air pressure sensor short circuit to power supply	P0130	The upstream cylinder 1 oxygen sensor signal is unreasonable
P0112	Intake air temperature sensor signal voltage is too low	P0131	Upstream cylinder 1 oxygen sensor signal is too low
P0113	Intake air temperature sensor signal voltage is too high	P0132	Upstream 1 cylinder oxygen sensor signal circuit voltage is too high
P0134	Upstream 1 cylinder oxygen sensor circuit signal failure	P0627	Oil pump relay control circuit open
P0201	1 cylinder injector control circuit open	P0629	The oil pump relay control circuit is short-circuited to the power supply
P0261	1 cylinder injector control circuit short circuit to ground	P0650	MIL lamp driver circuit failure
P0262	1 cylinder injector control circuit short circuit to power supply	P0444	Carbon canister solenoid valve open circuit
P0322	No speed sensor pulse signal (open circuit or short circuit)	P0459	Carbon canister solenoid valve short circuit to power supply
P0480	Fan control circuit open	P0458	Carbon canister solenoid valve short circuit to ground
P0691	The fan control circuit is short-circuited to ground	P2300	1 cylinder ignition coil short circuit to ground
P0692	The fan control circuit is short-circuited to the power supply	P0628	The voltage of the oil pump relay control circuit is too low
P0511	Idle actuator control circuit open	P1098	The signal voltage of the tipping sensor is too low
P0563	System battery voltage is too high	P1099	The signal voltage of the dump sensor is too high

368G ETC：

Code	illustrate	Code	illustrate
P0571	Brake Lamp Signal Circuit Malfunction	P0628	Oil Pump Relay Control Circuit Malfunction
P0116	Engine coolant temperature exceeds reasonable threshold limit fault	P0627	Oil Pump Relay Control Circuit Malfunction
P0118	Engine Coolant Temperature Sensor Circuit Voltage Too High	P2270	Bank 1 rear oxygen sensor aging - signal consistently rich
P0117	Engine Coolant Temperature Sensor Circuit Voltage Too Low	P2271	Bank 1 rear oxygen sensor aging - signal consistently lean
U0073	CAN1 Busoff fault	P0133	Bank1 oxtgen sensor shows delayed response to both rich and lean mixtures
P0121	Electronic Throttle Position Sensor 1/2 Signal Unreasonable	P0692	Fan Control Circuit Voltage Too High
P0123	Electronic Throttle Position Sensor 1 Signal Circuit Voltage Too High	P0691	Fan Control Circuit Voltage Too Low
P0122	Electronic Throttle Position Sensor 1 Signal Circuit Voltage Too Low	P0480	Cooling Fan Control Circuit Open
P0223	Electronic Throttle Position Sensor 2 Signal Circuit Voltage Too High	P0138	The rear oxygen sensor signal wire is shorted to the power supply
P0222	Electronic Throttle Position Sensor 2 Signal Circuit Voltage Too Low	P0137	Rear oxygen sensor signal wire shorted to ground
P0420	Aging of the oxygen storage capacity of the three-way catalytic converter	P2232	The signal wire of the rear oxygen sensor is coupled to the heating wire
P0106	Intake air pressure sensor over upper limit fault	P0136	Post-oxygen sensor signal open circuit
P0106	Intake air pressure sensor below lower limit fault	P0132	Bank1 Oxygen Sensor Signal Voltage Too High Malfunction
P0108	Intake Manifold Pressure Sensor Voltage Too High Malfunction	P0131	Bank1 Oxygen Sensor Signal Voltage Too Low Malfunction
P0107	Intake Manifold Pressure Sensor Voltage Too Low Malfunction	P0130	Bank 1 oxygen sensor signal voltage too low
P0105	No change in the intake pressure sensor 1 signal	P0134	Bank1 Oxygen Sensor Signal Circuit Open Malfunction
P2106	Electronic throttle actuator stage failure (short circuit)	P0301	engine misfired
P2106	Electronic throttle actuator stage failure (overheating or overcurrent)	P1530	AD converter zero test monitoring failure
P2106	Electronic throttle actuator stage fault (unreasonable)	P1531	AD converter given voltage test monitoring failure
P2106	Electronic Throttle Drive Stage Malfunction (Open Circuit)	P060D	Second Layer Throttle Pedal Signal Rationality Malfunction
P1568	Return Spring Check Maximum Malfunction	P061C	Second Layer Engine Speed Monitoring Malfunction
P1545	DVE Position Deviation Malfunction	P1527	First Layer Safety Fuel Cut-off Monitoring Malfunction
P1559	Throttle Limp Home Position Self-Learning Malfunction	P1528	Second Layer Safety Fuel Cut-off Monitoring Malfunction
P1545	Throttle body PID control maximum fault	P1530	Caused a failure in the electronic control unit (ECU) leading to irreversible fuel cut-off (ICO).
P1545	Throttle body PID control minimum fault	P061A	Second Layer Torque Monitoring Malfunction
P1579	Electronic Throttle Self-Learning Conditions Not Satisfied	P1573	Monitoring Error Response Malfunction
P1564	System Voltage Does Not Satisfy Electronic Throttle Self-Learning Conditions	P1574	Errorpin is activated, but monitoring communication is normal
P1559	Electronic throttle lower limit position initialization self-learning failure	P2123	Electronic Throttle Pedal Position Sensor 1 Signal Voltage Too High
P1565	Throttle Mechanical Lower Stop Point Re-Learning Failure	P2128	Electronic Throttle Pedal Position Sensor 2 Signal Voltage Too High
P0262	No.1 Cylinder Injector Control Circuit Voltage Too High	P2122	Electronic Throttle Pedal Position Sensor 1 Signal Voltage Too Low
P0261	No.1 Cylinder Injector Control Circuit Voltage Too Low	P2127	Electronic Throttle Pedal Position Sensor 2 Signal Voltage Too Low

P0201	No.1 Cylinder Injector Control Circuit Open	P0651	5V Power Supply Module 2 Malfunction Occurred
P0322	Speed sensor signal lost fault	P2138	Electronic Throttle Pedal Position Sensor Signal Unreasonable
P061A	The rear oxygen sensor's heater resistance is unreasonable	P0459	Charcoal Canister Control Valve Control Circuit Voltage Too High
P1573	The voltage of the rear oxygen sensor heater control circuit is too high	P0458	Charcoal Canister Control Valve Control Circuit Voltage Too Low
P1574	The voltage of the rear oxygen sensor heater control circuit is too low	P0444	Charcoal Canister Control Valve Control Circuit Open
P0036	Rear oxygen sensor heater control circuit open	P0119	Engine temperature reasonableness fault
P0053	Bank1 front oxygen sensor's heater resistance is unreasonable	P0563	The system battery voltage is too high
P0032	Bank1 Oxygen Sensor Heater Voltage Too High Malfunction	P0501	Vehicle speed signal failure
P0031	Bank1 Oxygen Sensor Heater Voltage Too Low Malfunction	P06B8	Error occurred while reading NVMBlock
P0030	Bank 1 Oxygen Sensor Heater Control Circuit Open Circuit Fault	P06B8	Error occurred while writing NVMBlock
P0351	Single-cylinder ignition coil control open circuit		
P2301	The voltage of single-cylinder ignition coil control is too high		
P2300	The voltage of single-cylinder ignition coil control is too low		
P0111	Inlet air temperature exceeds the reasonable threshold limit fault		
P0113	Intake Air Temperature Sensor Circuit Voltage Too High Malfunction		
P0112	Intake Air Temperature Sensor Circuit Voltage Too Low Malfunction		
P0114	Intake air temperature sticking fault		
P0629	Oil Pump Relay Control Circuit Voltage Too High		

3. Clear fault codes

After troubleshooting the EFI fault, it needs to be cleared manually or through a diagnostic instrument .

3.1 Manual Removal

Manually clear historical faults and reset the ECU : Power on the vehicle and turn the ignition switch on and off for more than five times (on - off counts as one time). If the ignition switch is turned on and the fault light does not light up, it means that the ECU has been reset successfully.

3.2 Clear using diagnostic instrument

different brands or models may vary , so please refer to the description in the diagnostic tool manual to clear the fault code.


CAUTION

If the fault light does not light up during engine operation and flashes after the engine is turned off, it is a historical fault that will not affect the performance and life of the vehicle and will disappear automatically later.

EFI parts layout

368G、250G：

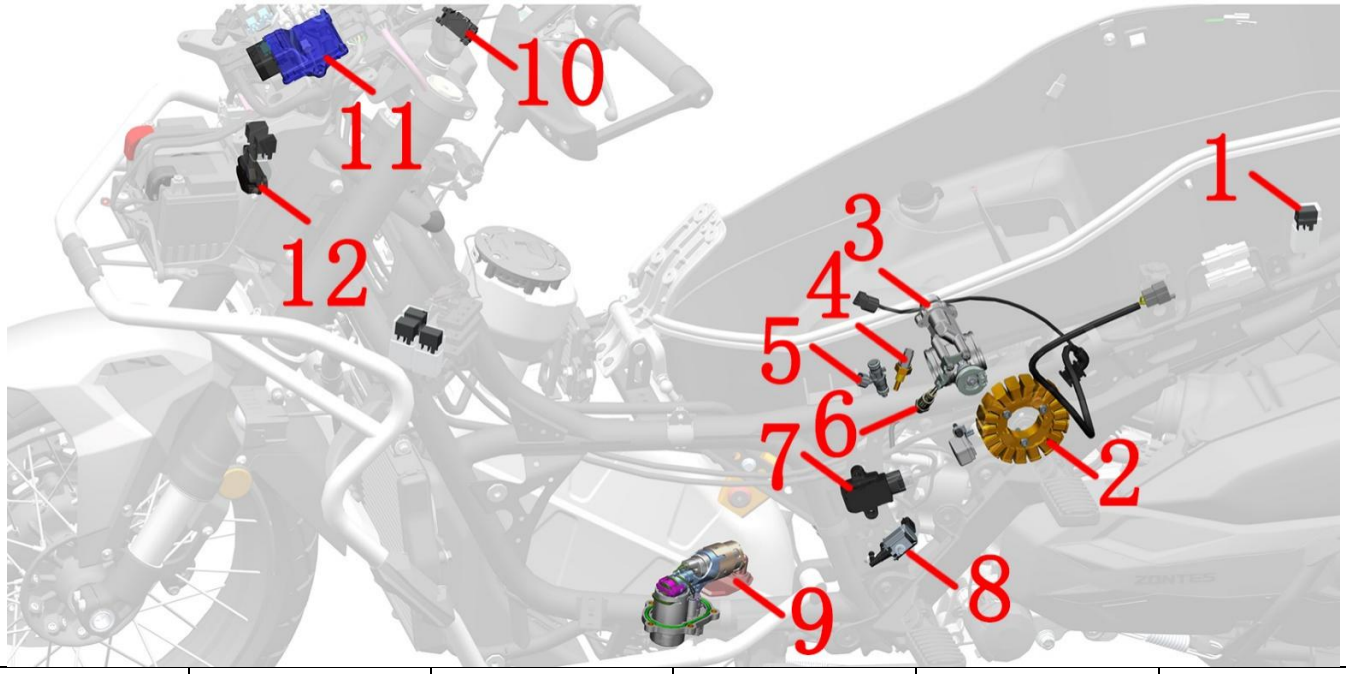

1	2	3	4	5	6
EFI relay	Crankshaft Position Sensor	Throttle body	Water and oil common sensor	Fuel Injector	Oxygen Sensor
					
7	8	9	10	11	12
Ignition coil	Carbon canister solenoid valve	Fuel Pump	OBD diagnostic interface (main cable)	ECU	Dump switch
			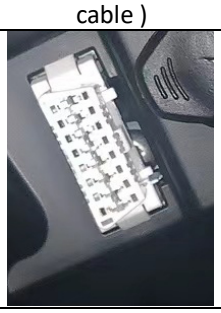		
* The throttle valve assembly includes (sensor, idle speed control valve, stepper motor) . The crankshaft position sensor is integrated with the magneto stator.					

ETC：

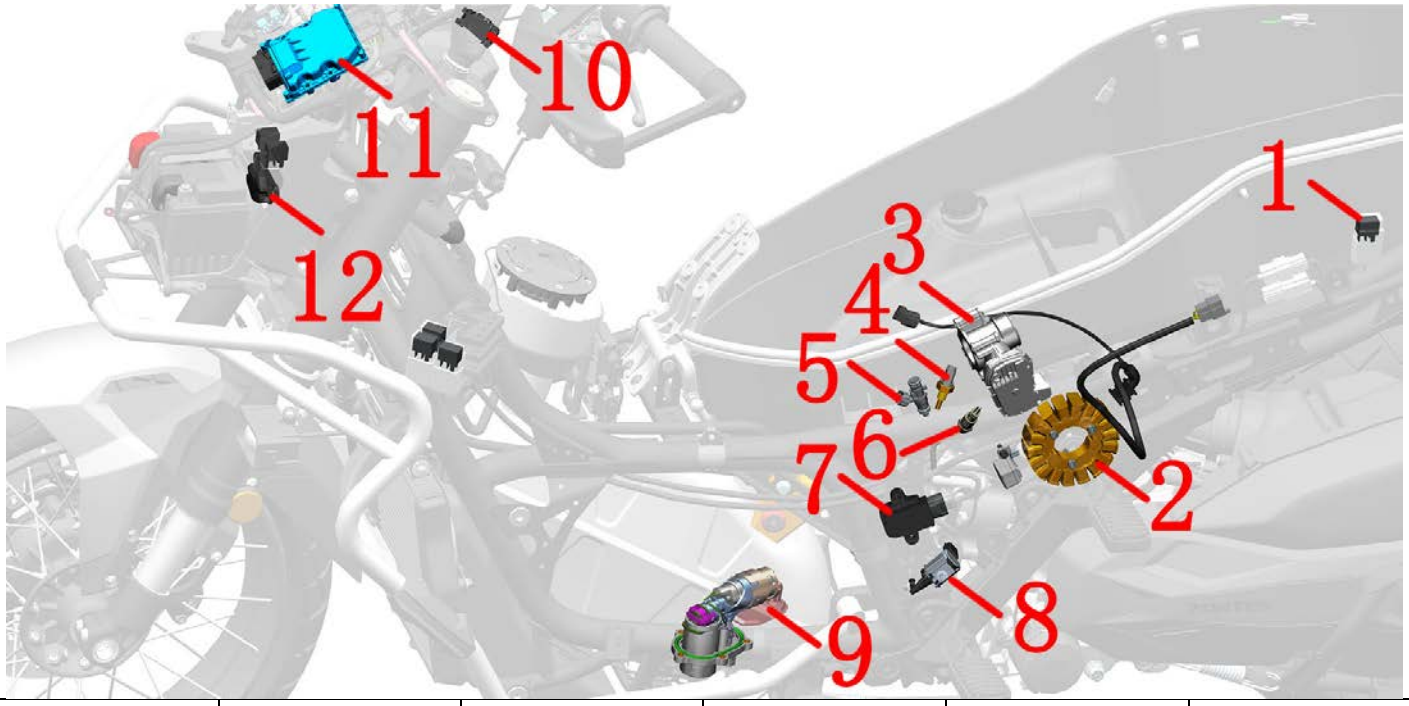

1	2	3	4	5	6
EFI relay	Crankshaft Position Sensor	Throttle body	Water and oil common sensor	Fuel Injector	Oxygen Sensor
					
7	8	9	10	11	12
Ignition coil	Carbon canister solenoid valve	Fuel Pump	OBD diagnostic interface (main cable)	ECU	Dump switch
			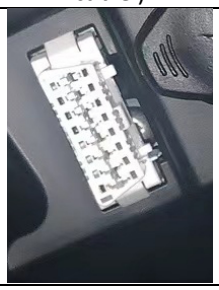		
* The crankshaft position sensor is integrated with the magneto stator.					

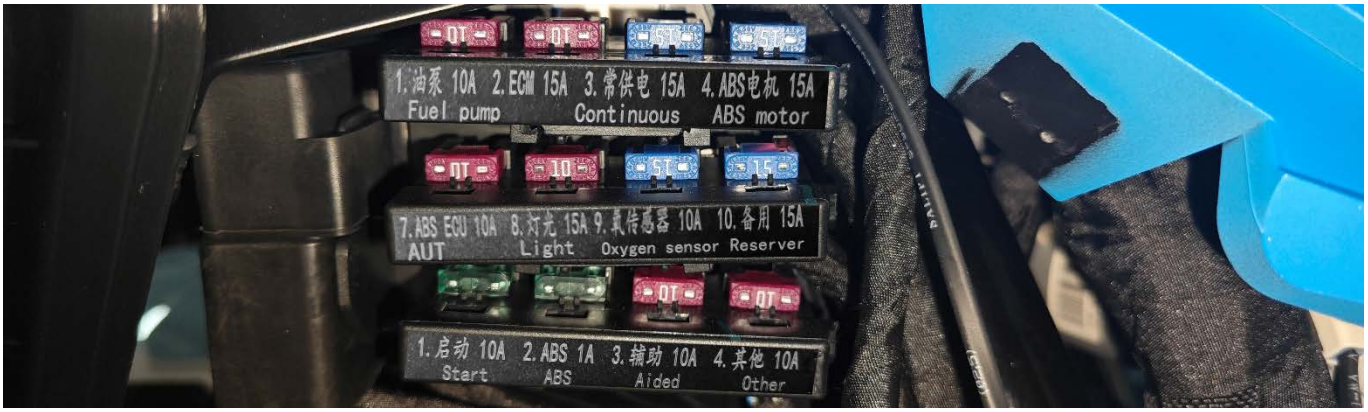

Fault diagnosis and troubleshooting of EFI parts

Notice:

● Once the EFI parts are removed, the EFI system needs to be reset. For detailed methods, refer to the service information in this chapter.

●Fuel pump, three-in-one sensor, stepper motor, ECU, etc. are precision parts. If they are disassembled without permission, they may be damaged, and they are not covered by the three guarantees due to human factors .

● After removing the throttle body, use lint- free cloth or masking paper to seal the air filter outlet and intake manifold to prevent foreign matter from entering .

1. EFI relay

6 relays (starting aid, light, fuel tank lock, fuel pump, ECM main relay, cooling fan) on the relay bracket on the left side of the head front riser . 2 are on the head bracket, 3 are near the fuse box, and 1 is on the left tail cover.

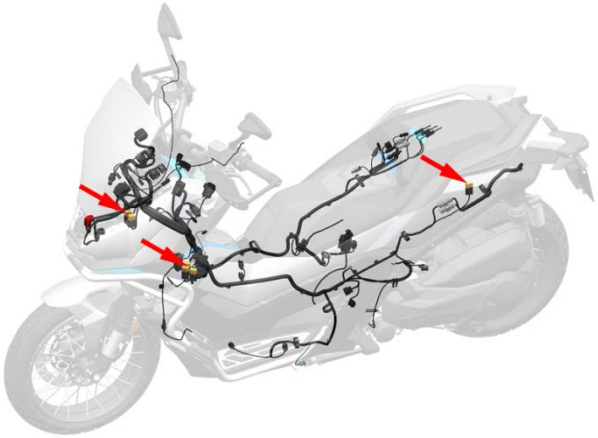

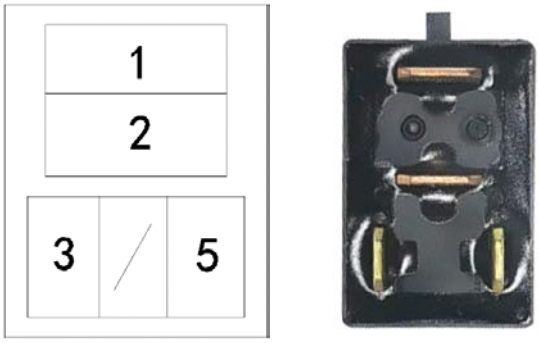

Cable end relay

3 and 5 are normally closed contacts, which can be tested with the beeping mode of a multimeter. 1 and 2 are normally open contacts. Otherwise, it can be judged as a relay failure.

2. Crankshaft position sensor

When the engine fails to start cleanly or has difficulty starting, poor acceleration, unstable idle speed, or intermittent flameout, check whether the crankshaft position sensor is normal.

crankshaft position sensor is installed on the right crankcase cover and integrated with the magneto stator . Find the sensor plug in front of the right side cradle of the vehicle body , press the head anti-drop lock and pull it out. Use a multimeter to measure the resistance of the crankshaft position sensor at 25 ℃ (77F). It should be 150±20Ω , otherwise it should be replaced.

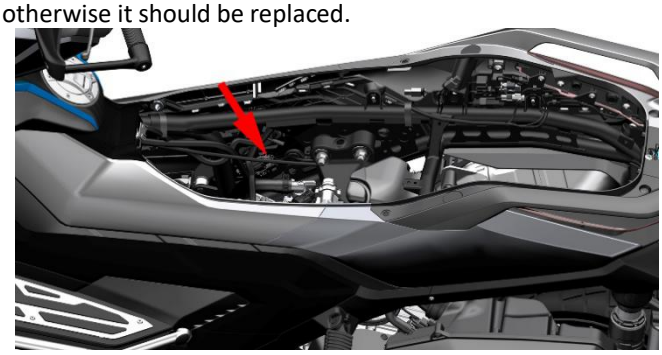

Find the plug on the inside of the left tail cover of the motorcycle body. In addition, use a multimeter to measure the phase-to-phase resistance of any two terminals of the three -pin plug of the magneto stator. It should be 0.7 ± 0.15Ω at 25 ℃ (77F) .

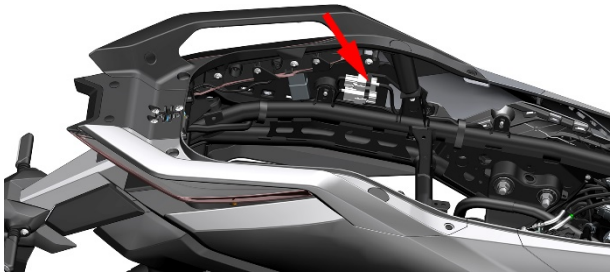



3. Throttle valve body

3.1 Common fault phenomena

1. The engine is prone to stalling while the vehicle is driving and is difficult to start , especially when it is cold.

2. The idle speed is unstable or there is no idle speed, and there is intermittent shaking when accelerating .

3. Insufficient power leads to poor acceleration performance and unstable operation.

3.2 Sensors

For details on the disassembly, assembly and inspection of the throttle valve position sensor and external intake pressure sensor, please refer to the previous section on the throttle valve body .



Air filter intake temperature sensor

Remove the temperature sensor from the air filter, place it in an ambient temperature (20 to 30 °C), and use a multimeter to check whether the resistance of the two pins is between 2726 and 1770 Ω.

3.3 Troubleshooting process

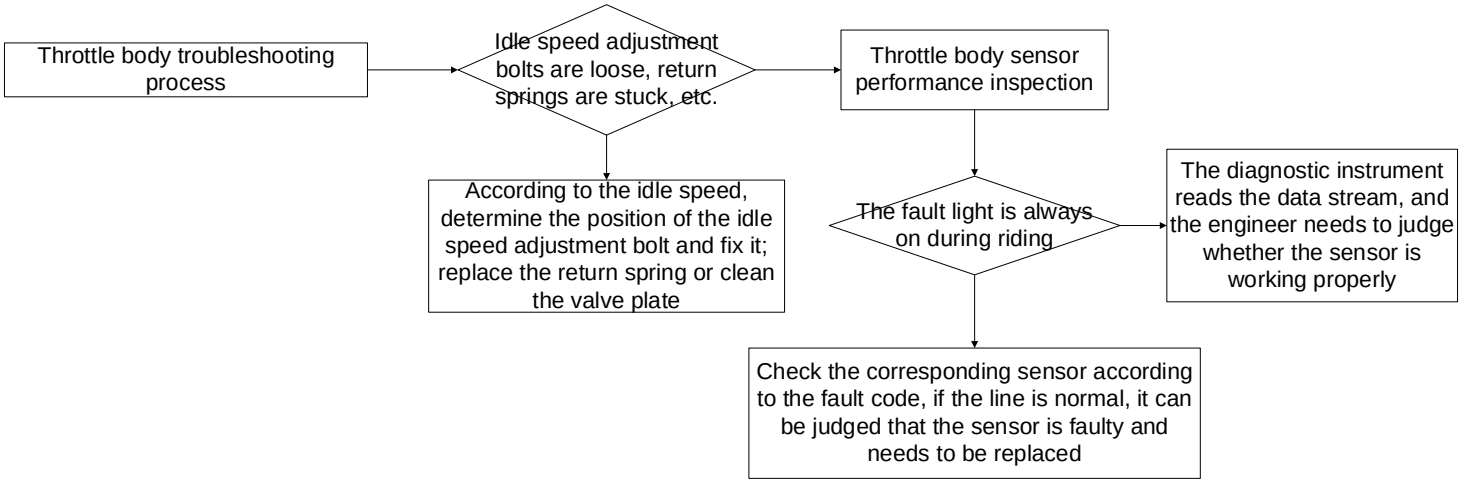

4. Water and oil shared sensor



When the engine is difficult to start, the idle speed is unstable, the engine performance is poor, and it is easy to stall, you need to check whether this sensor is abnormal. You can use the diagnostic instrument to read the fault code to confirm whether the water-oil shared sensor is faulty.

First , refer to the steps for removing the storage box to remove the storage box , and refer to the steps for removing the throttle body to remove the throttle body to facilitate the removal of the water-oil common sensor. Located on the right side of the intake manifold . First, pinch the top of the plug, press the anti-drop card, and then pull out the plug.

of the two pins of the multimeter at room temperature is: 1.5 ~ 4.0kΩ .

Due to limited space , it is recommended to use a 72-tooth 17 # ratchet wrench to remove the water-oil common sensor counterclockwise and remove the 9×2 EPDM rubber O-ring. When reassembling, replace the new O- ring to avoid leakage.



Standard torque: 13 ± 1.5 Nm (1.3 ± 0.2 kgf.m, 10 ± 1 lbf.ft)

5. Injector

When the engine is unstable, has poor acceleration and poor power performance , you need to check whether the injector is normal .

The seat cushions and storage box must be removed first .



can be determined by the following methods :

a. After parking the vehicle firmly, start the engine and let it run at idle speed. Use a stethoscope or a stethoscope to listen to the working sound of the cylinder. You should be able to hear the rhythmic working sound of the injector. If the sound is crisp and even, it is working properly. If the sound is small or inaudible, remove the injector for inspection. Or if the engine shuts down when the injector plug is unplugged , it means the injector is normal .



b. Press the anti-drop lock and pull out the plug. Use a multimeter to measure the static coil resistance, which should be 12 ± 0.6Ω , otherwise the injector is faulty and needs to be replaced.



If you need to replace the injector, wait until the engine and muffler are cooled before you proceed. After placing the oil container at the bottom, refer to the steps for removing the high-pressure oil pipe to pull out the high-pressure oil pipe at the fuel pump end and release the remaining fuel . Use a 10 # sleeve to remove the bolt (1), remove the nozzle holder (2), and then remove the injector (3) .

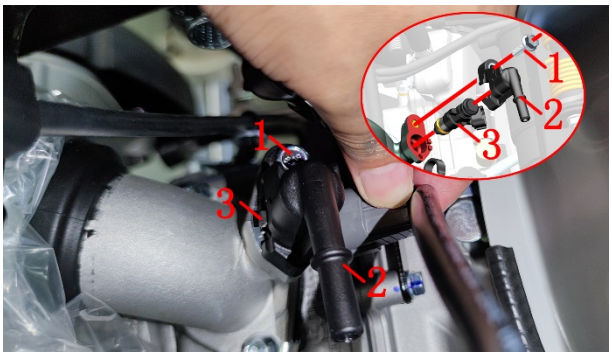

6. Oxygen sensor

WARNING

●Be sure to wait until the engine and muffler are completely cooled before removing the oxygen sensor.

When the engine performance is poor, the idle speed is unstable, the fuel consumption is high, and the air-fuel ratio is incorrect, the oxygen sensor needs to be checked. The fault code can be read through the diagnostic instrument to confirm whether the oxygen sensor is faulty.

6.1 Detection

Find the oxygen sensor plug above the oil dipstick on the right side of the vehicle and unplug it . Use an 8# socket to remove the bolts and pull out the oxygen sensor together with the bracket.



Use a multimeter to measure the resistance of the heating element of the two white wires to be 9 ±2kΩ ; or measure the current to be ≤2.1A. Otherwise, it can be judged that the oxygen sensor is faulty. The ceramic inside the oxygen sensor is hard and brittle. Do not use hard objects to knock or blow with strong gas, otherwise it will easily cause damage.

Or remove the oxygen sensor and observe the color of the top of the head . Normally it is light gray. If it is white, it means that the silicon is poisoned and damaged and needs to be replaced. If it is black, it means that there is carbon deposit and it can be cleaned and continued to be used . If it is brown, it is lead poisoning and needs to be replaced.

7. Ignition coil

No high-voltage spark ; low -voltage spark intensity ; when the engine cannot start, check whether the ignition coil is normal. Common ignition coil faults such as coil winding short circuit, open circuit or grounding will result in no high-voltage electricity; in addition, aging of the ignition coil insulation material , poor insulation performance, and leakage of the ignition coil will make the spark weak and the ignition energy insufficient, resulting in unstable idle speed, intermittent flameout, and failure to ignite. In case of such a fault, it is necessary to check whether the resistance and insulation performance of the ignition coil meet the requirements. If not, it must be replaced.

Refer to the steps in the section “Maintenance - Spark Plug - Removal of Spark Plug” to remove the spark plug from the engine and install it on the high-voltage cap. Put away the side stand, use the main stand to park the vehicle firmly, unlock the vehicle, turn the ignition switch to “ ” , hold the brake handle and move the spark plug close to the engine cylinder head cover or box (should be away from the spark plug installation screw hole) for about 6 mm (0.24 in), press the start button, if blue sparks are found at the spark plug electrode, the ignition system is normal, otherwise it should be repaired by a qualified maintenance unit.

If you want to replace the ignition coil, follow these steps:

a. First remove the seat cushion and storage box, and find the ignition coil above the cylinder head on the left side of the vehicle body.

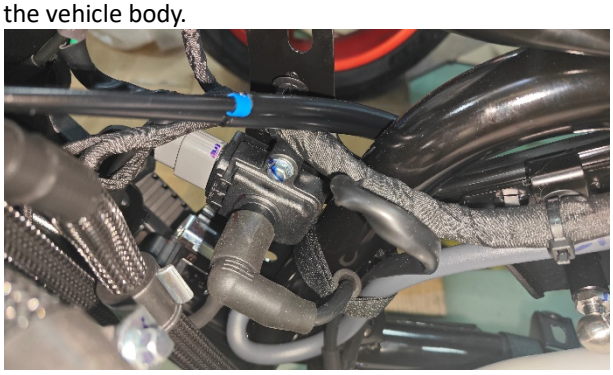

Remove the cable tie and pull out the high-voltage wire near the ignition coil.

Hold the ignition coil body with one hand and press the plug anti-drop buckle with the other hand to pull out the plug. It is difficult to pull out the plug because there is a waterproof rubber plug inside.

Use 8 # to remove the M6×22 bolts and remove the ignition coil body.

8. Carbon canister solenoid valve

When the engine performance is poor, the idle speed is bad, or the air-fuel ratio is incorrect, the carbon canister solenoid valve needs to be checked .

Use a multimeter to measure the resistance between the two plugs of the carbon canister solenoid valve plug, which should be 35±2Ω , otherwise it can be judged that the solenoid valve is faulty.



9. Fuel pump

Notice:

●The fuel pump is a precision component that needs to be assembled in a dust-free workshop and requires strict testing, so it is prohibited to disassemble it by yourself.

● The engine of this vehicle is designed with a high compression ratio. It is recommended to add 95 # and above unleaded gasoline for a long time . In order to extend the service life of the vehicle, please be sure to refuel at a regular gas station .

●The fuel pump is prohibited from running in dry state or in water , otherwise its service life will be shortened, and in serious cases, it will be directly damaged. The positive and negative wires of the fuel pump cannot be connected in reverse. It is prohibited to disassemble the fuel inlet filter, which may easily cause foreign matter to enter the fuel pump or block the injector.

● Disassembly of the fuel pump or high-pressure oil pipe should be carried out in a well-ventilated, dust-free or dust-free environment; dangerous operations such as fireworks or making phone calls are strictly prohibited at the disassembly site .

When the engine is difficult to start or dust-free starting occurs; the engine is not working properly, running unsteadily, etc.; the injector does not spray fuel; the engine runs weakly and the acceleration performance deteriorates , it is necessary to check whether the fuel pump is abnormal.

After lifting the vehicle , use a T 25 box end wrench to remove the 4 bolts with threaded fasteners in the middle of the bottom of the lower air deflector, and remove the flanged bushing. Then use a T 25 box end wrench to remove the 5 bolts on both sides. Remove the bottom of the lower air deflector, and then remove the high-pressure oil pipe. Use an oil pressure gauge to measure the fuel pressure, or use a simple test method to test whether the fuel pump is normal.

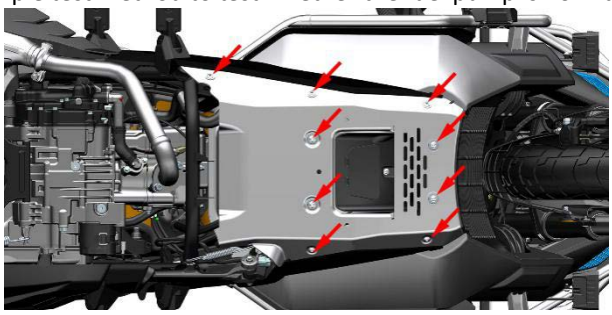

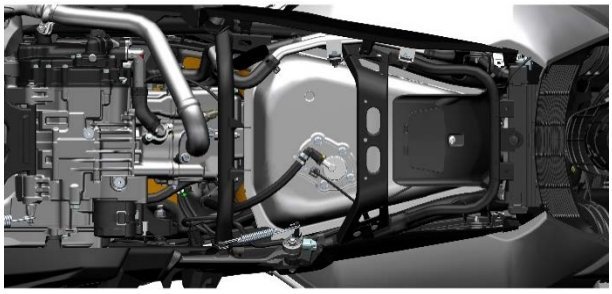

If you need to remove the fuel pump from the vehicle, use the fuel pump to drain the fuel in the fuel tank. Lift the vehicle and press the plug buckle shown in the figure to pull out the cable. Remove the 5 bolts from the bottom with a 10 # socket , and remove the high-pressure oil pipe bracket to remove the fuel pump .



Be careful not to press the oil outlet pipe circled in red . Once damaged, the entire fuel pump assembly can only be replaced.



When reassembling, you need to pre-tighten the bolts diagonally first and then tighten the 5 bolts . Otherwise, the uneven compression of the fuel pump 's sealing rubber ring may easily lead to leakage and cause safety hazards .

10. OBD interface

main cable has an OBD interface . For details on its location, see the official website assembly video "ZT368T-G Charging Port, OBD Interface, and Fuse Box Location Instructions" . Remove the expansion pins at the bottom of the right storage box cover, and you can see it after removing it. Through the diagnostic interface, you can use a diagnostic instrument to read historical fault codes , current fault codes , clear fault codes, and read the status of the ECU .

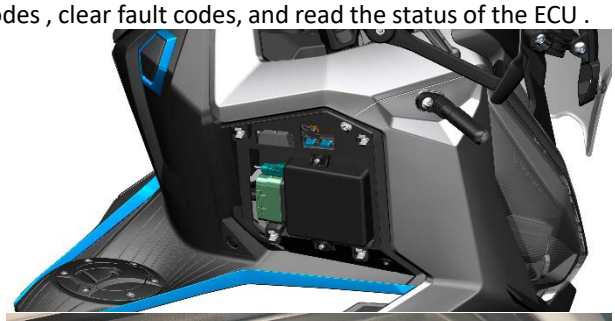



11. MSE 6.0 ECU

When the engine fails to start or has poor performance,

you need to check whether the ECU is normal . Because the ECU is complex and difficult to judge , you can generally use the elimination method to remove the ECU from a normal vehicle of the same model and replace it with the faulty vehicle.

The index finger and middle finger are located under the pull rod . While pressing the buckle with the thumb , use the index finger and middle finger to turn the ECU plug in the direction of the thumb to unplug it. Remove the bolt with a 5# hexagon socket to remove the ECU .

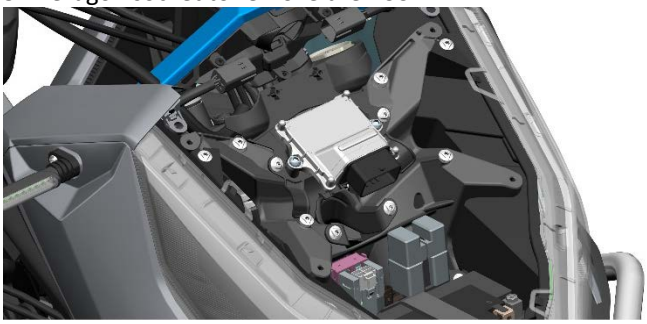

1 2. Dump switch

Troubleshooting process

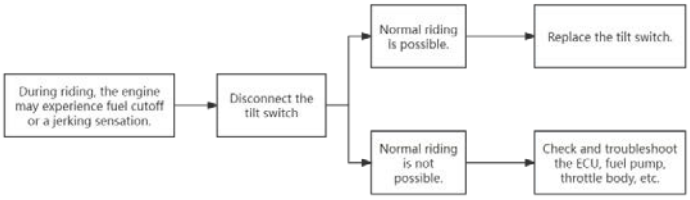

Disassembly

After removing the front panel and battery, the dump switch is exposed. Unplug it and use an 8# socket to remove the bolts to remove it.

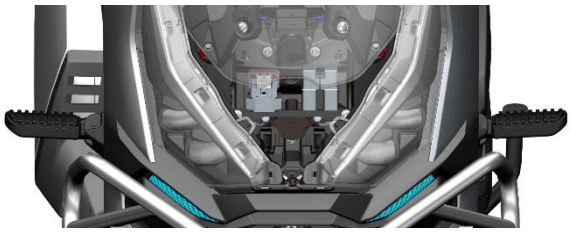

Examine

Remove the dump switch without disconnecting the plug.

Use OBD diagnostic instrument to detect whether the dump switch is faulty.

If there is no diagnostic instrument, use a multimeter to detect the output voltage to determine whether there is a fault.

standard:

Horizontal position: 0.4-1.4V

About 60°: 3.7-4.4V

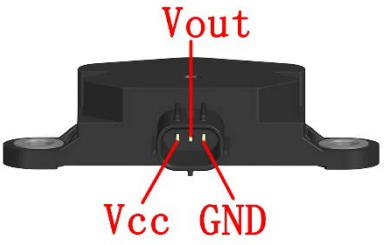

Functional Check

Remove the dump switch without unplugging it, place the dump switch horizontally, and start the engine. Tilt the dump switch to the left or right by about 60 °. The engine should shut down in a short time, otherwise the dump switch is faulty.

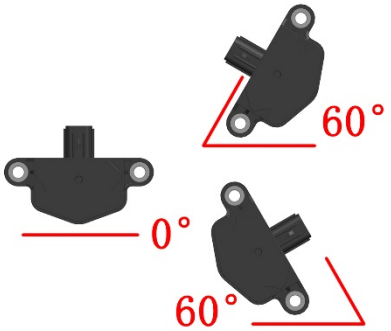

Engine cannot start and there is no sign of starting fault diagnosis process

When the starter motor can drive the engine to run normally when the start button is pressed , but the engine cannot work normally and there is no sign of starting, refer to the following diagnostic process to identify the cause of the fault.

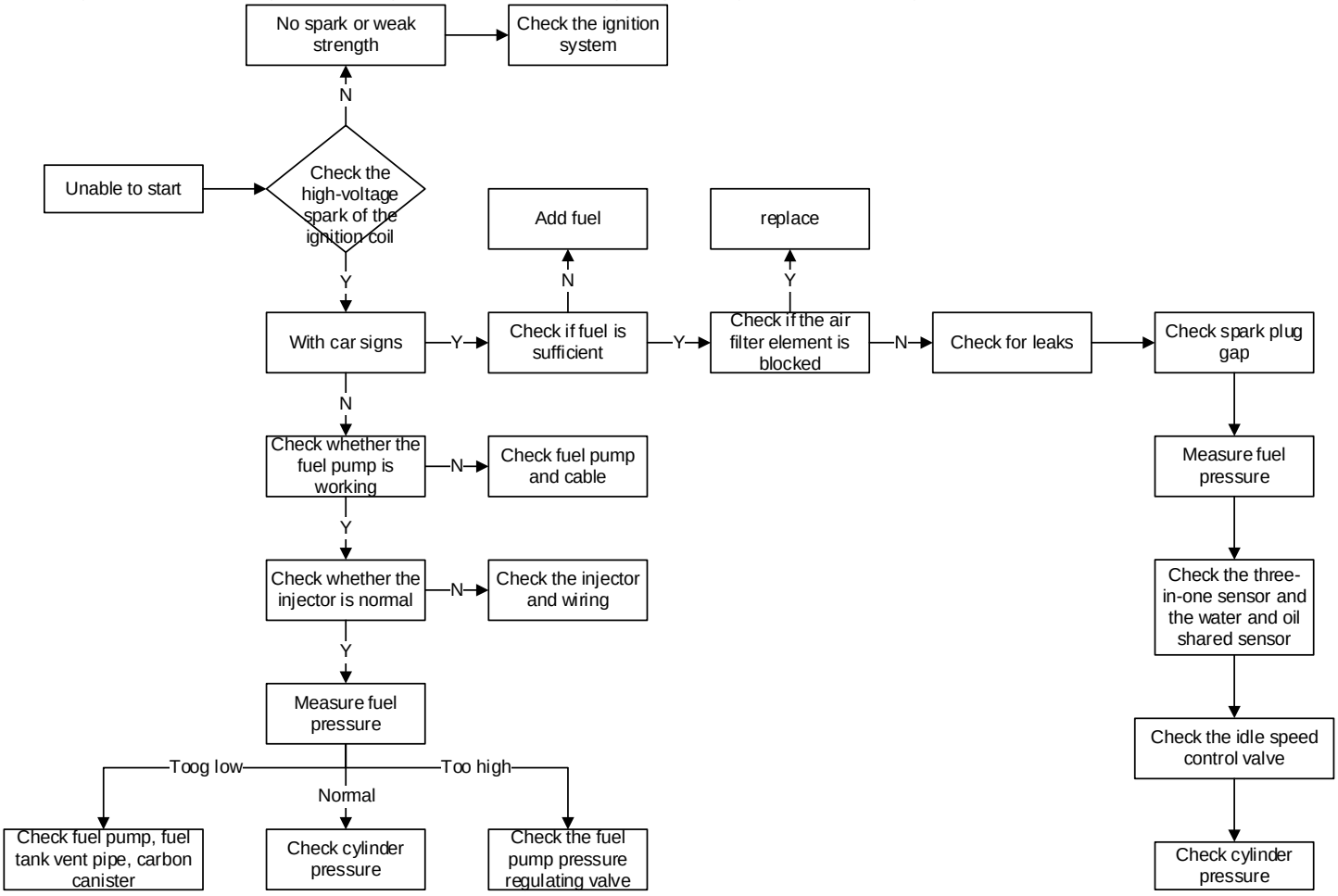

Engine cannot start with motorcycle fault diagnosis process

When the starter motor can drive the engine to run normally when the start button is pressed , and there are signs of starting but it cannot start, refer to the following diagnostic process to find the cause of the fault.

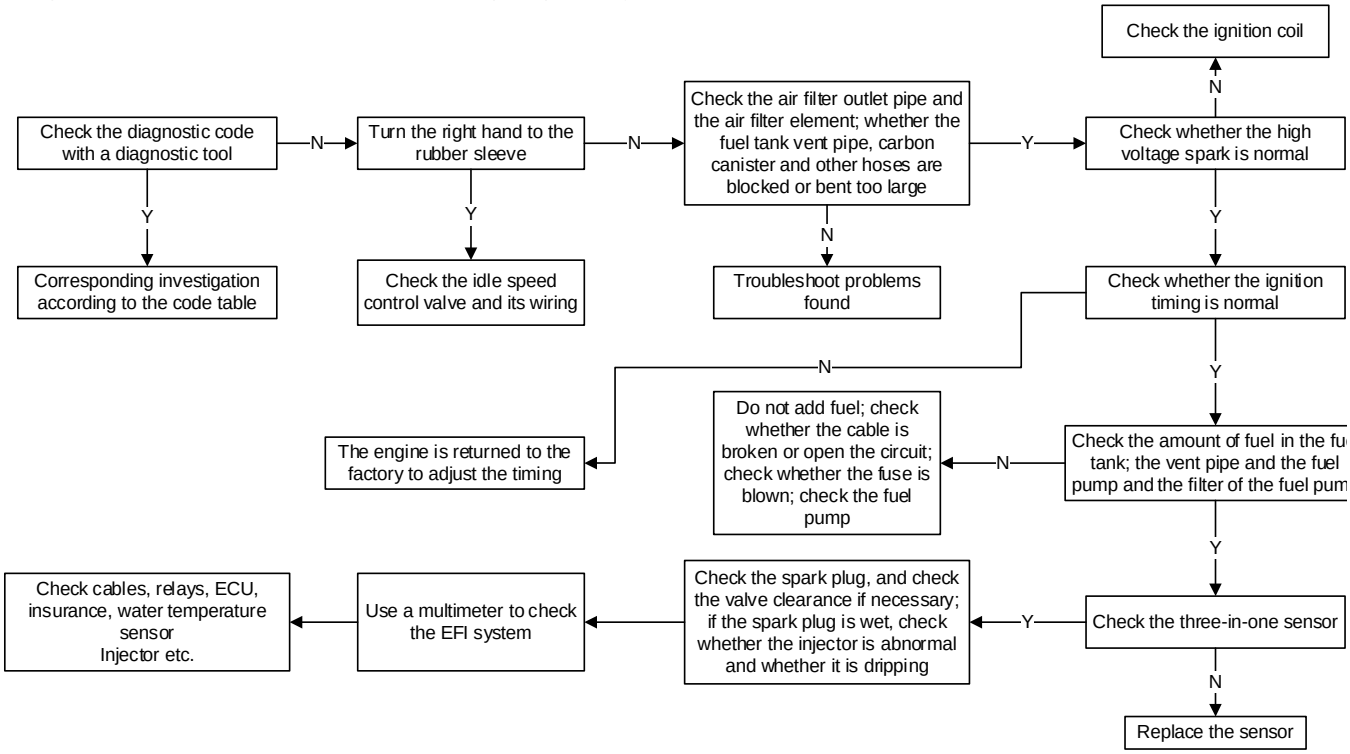

Acceleration failure

The engine speed cannot be increased immediately by turning the right-hand handle, and there is hysteresis and slow acceleration. Please refer to the following diagnostic process to find out the cause of the fault.

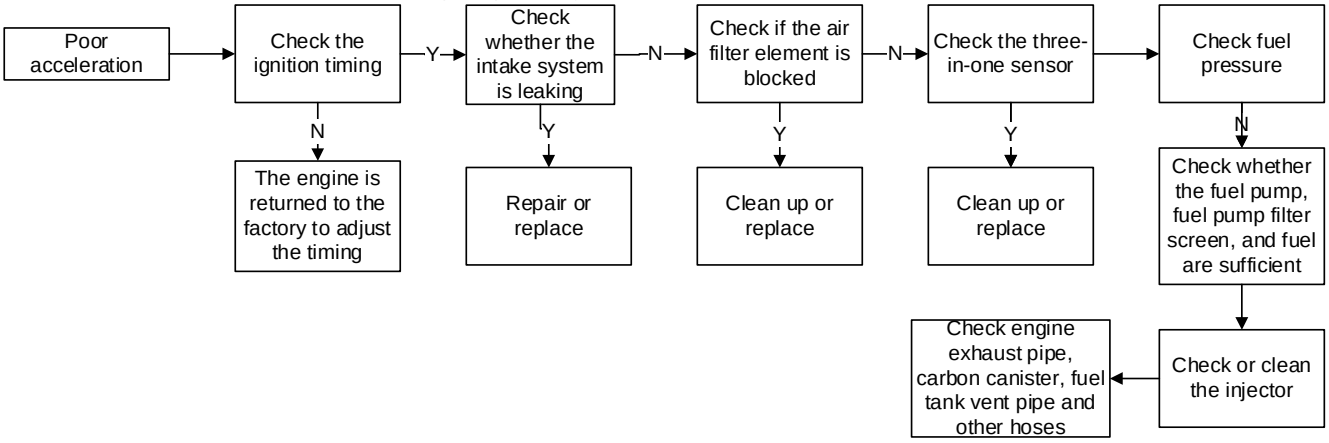

High idle speed on hot motorcycle

If the engine can run normally at fast idle when it is cold , but the idle speed does not drop back to 1500-1700 rpm after warming up , you can refer to the following diagnostic process to troubleshoot the cause of the fault.

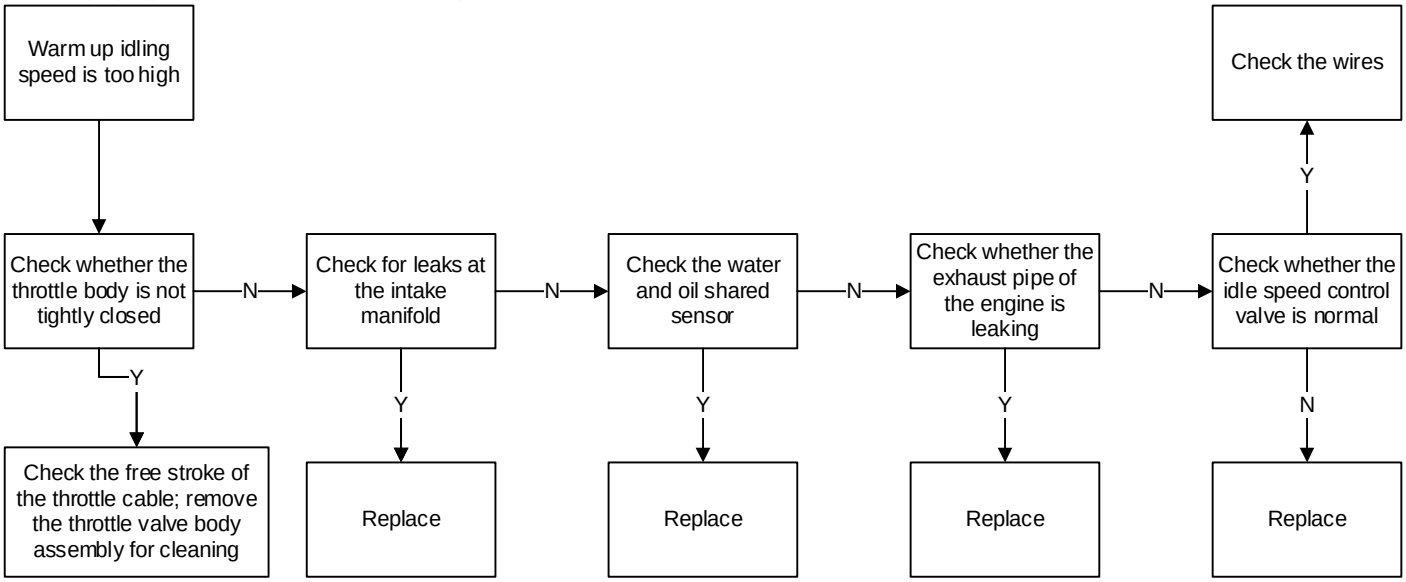

Cooling motorcycle idling unstable

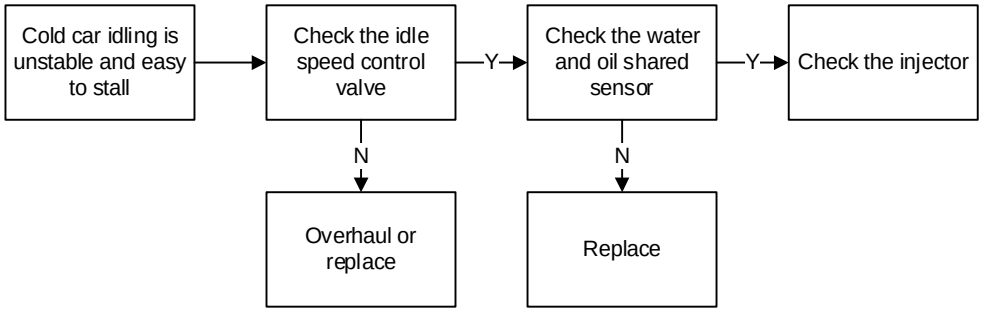

Unstable idling speed, easy to stall

The engine idle speed is unstable and easy to stall, but it can return to normal after warming up. Please refer to the following diagnostic process to find out the cause of the fault.

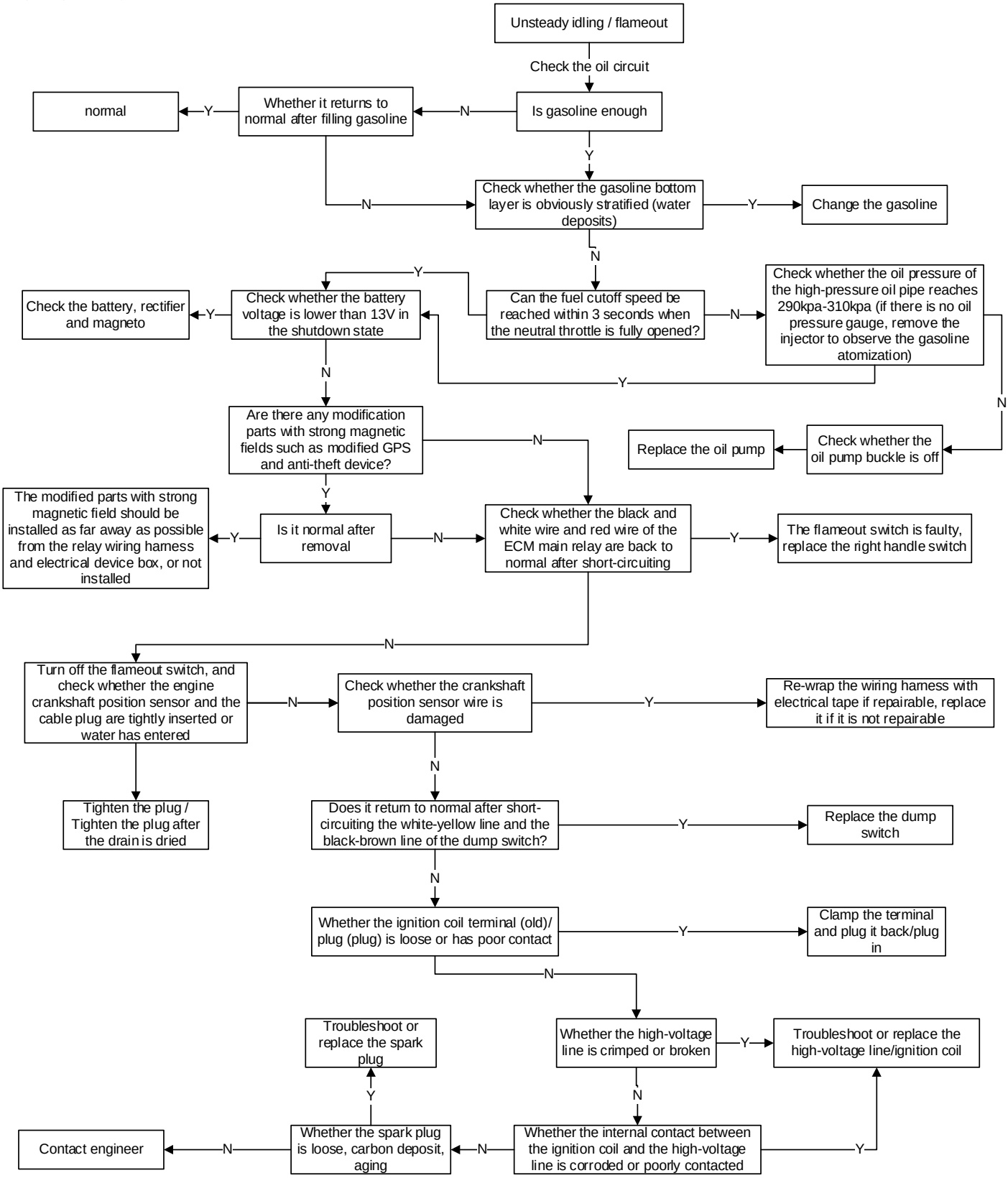

EFI fault indicator light always on analysis flow chart

If the EFI fault indicator light " " is always on, you should first check whether the wire plugs of each EFI sensor are loose .

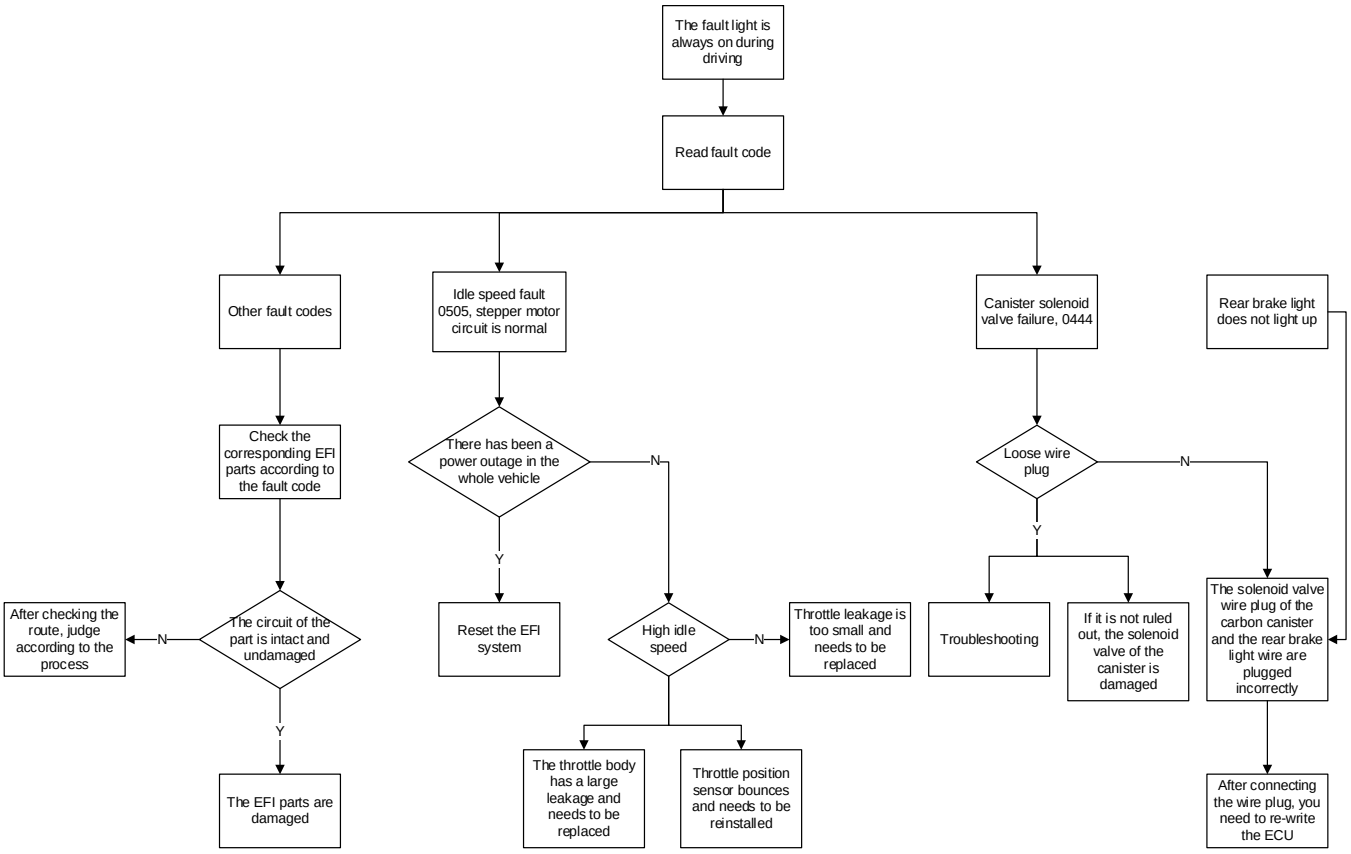

4. Ignition system

Notice before service

1. The content of this chapter requires certain maintenance experience . It is recommended to go to a qualified maintenance unit for inspection or maintenance.
2. After power is turned on , do not remove components connected to the 12V power supply at will to avoid the coil in the electrical appliance generating self-inductance and causing instantaneous voltage to damage the ECU or sensor.
3. Use spark plugs with the correct calorific value. Spark plugs with inappropriate calorific value may damage the engine.
4. Ignition system failures are most commonly caused by poor plug connection and corrosion of terminal blocks , so these two items should be checked first.
5. Since the ECU is preset at the factory , the ignition timing cannot be adjusted. If the ignition timing needs to be adjusted, it can only be returned to the factory for repair.
6. Make sure the battery is fully charged. Insufficient battery may result in slow starting speed or weak or no spark .
tool:

multimeter


7. The driving conditions and maintenance status of each vehicle are different, so it is impossible to list all the fault phenomena and troubleshooting processes one by one. Only some of the more common faults can be listed. The maintenance personnel themselves also need to have certain professional knowledge and experience accumulation process.
8. For details on spark plug disassembly and inspection, please refer to the " Spark Plug " section in the " Maintenance " chapter of this manual . Before removing the spark plug, you need to use a dust blower to clean up the surrounding debris and dust. After removal, you need to block the spark plug port to prevent foreign matter from falling into the engine.
9. If there is a “  ” symbol on the right side of the step , you can click it to quickly jump to the corresponding step.

WARNING

● Do not plug or unplug the plugs of the components at will, and do not clean the plugs directly with water. Be sure to check whether they are plugged back in correctly after plugging or unplugging .

Troubleshooting

Check the following items before diagnosing the ignition system

a. Check whether the spark plug is abnormal ;

b. Check whether the high-voltage cap or plug of the ignition coil is loose ;

c. Check whether the high pressure cap has water in it;

d. If there is no spark, first find an ignition coil of the same model that is confirmed to be fault-free and install it on the faulty vehicle to test whether there is spark;

e. Check whether the "initial voltage " of the ignition primary coil is consistent with the battery voltage by unlocking the vehicle and turning the ignition switch to " " without starting the engine .

Spark plug no spark

1. Improper spark plug gap

the gap is too small, the electrode will have a " flame extinguishing " effect , suppressing the flame generation, and the spark intensity will be weak; if it is too large , the ignition voltage will result in no spark. Adjust to the standard 0.8-0.9 mm (0. 0 31-0.035 in).



2. A layer of oil film adheres to the surface of the spark plug electrode

Engine oil or gasoline leaks into the combustion chamber and adheres to the electrode surface, causing the electrode to short-circuit and resulting in no sparks. Engine oil generally leaks in from the gap between the piston and the cylinder wall or the valve guide . Check whether the gap is normal. If it is not normal, replace the corresponding parts. The accumulated gasoline may be caused by the mixture being too rich when the cold engine is started . You can clean it first and then try to ignite it.

3. Spark plug cover is damaged

high voltage current breaks through the damaged cover and causes leakage, and the spark plug needs to be replaced.

4. There is carbon deposit on the electrode, and the central electrode leaks electricity to the surrounding area instead of discharging to the electrode.

Excessive accumulation of carbon or oil on the electrode may cause a short circuit and burn out the insulator . Clean the carbon deposits or replace the spark plug.

5. Electrode damage

The center electrode is damaged due to long-term spark erosion or chemical corrosion by combustion gas ; it needs to be replaced .

6. Spark plug insulation is reduced

Deterioration of insulation performance will weaken the ignition voltage, resulting in weaker or no spark ; replacement is required

7. The high voltage wire of the ignition coil is short-circuited

Ignition coil needs to be replaced

8. Low battery level

Insufficient power leads to weak spark or no spark. Please charge it with the charger provided with the vehicle. Or charge it during long-distance riding .

9. ECU failure

After eliminating the above reasons, you can remove a good ECU from a vehicle of the same model and replace it with the faulty vehicle to make a judgment.

Ignition system layout



1- Right Handlebar Auxiliary Switch 2-Engine controller (ECU) 3- Relay 4-Battery
5-Side stand flameout switch 6- Ignition coil body 7-Crankshaft position sensor 8- Spark plug
9- High voltage wire 10-Dump switch 11-Start relay 12-PKE 13- Steering lock 14- Right handlebar switch

Remark:

● The fuse box is built into the main wiring harness, and there are 3 in total . For detailed diagrams, see "Layout of Electronic Injection Components" in the " Electronic Injection System " chapter of this manual .

●The magneto stator and crankshaft position sensor are integrated into one part and cannot be replaced separately. For details on crankshaft position sensor troubleshooting, please refer to the crankshaft position sensor section in the " Electronic Injection System" chapter of this manual, "Electronic Injection Parts Fault Diagnosis and Troubleshooting " .

Ignition system electrical schematics

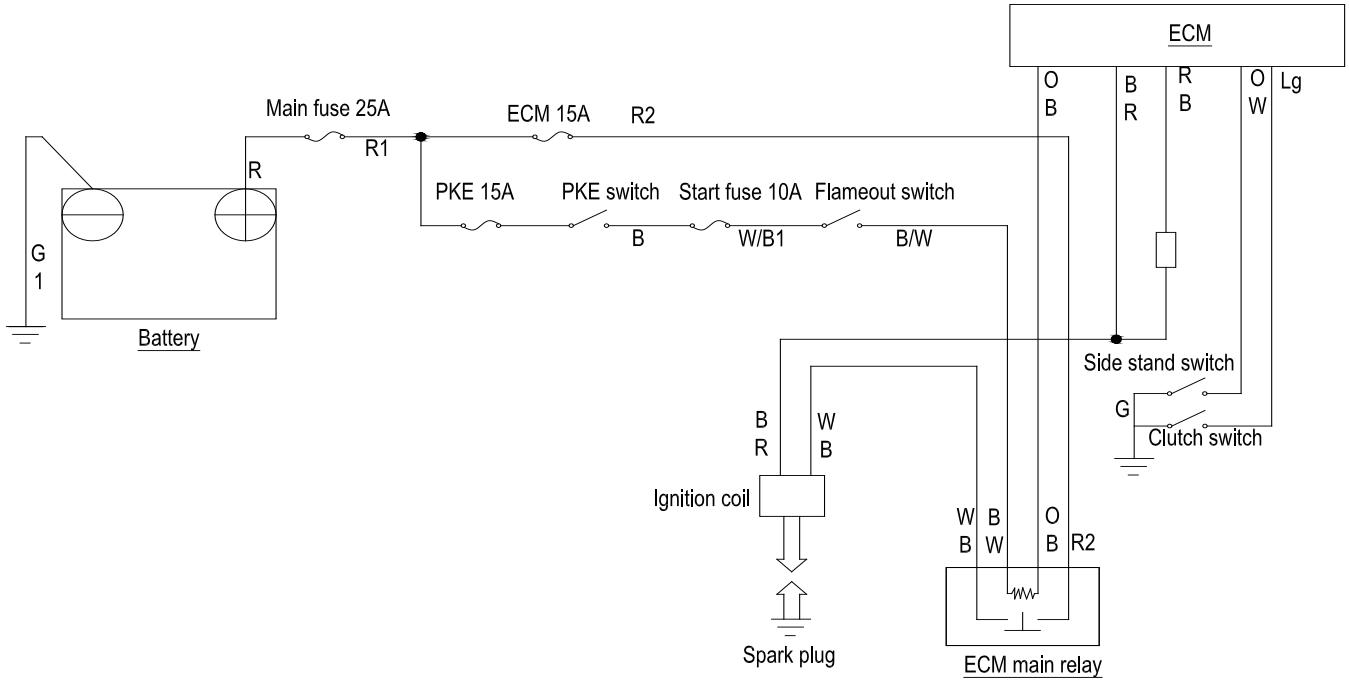

Ignition system inspection

Notice:

●If there is no spark from the spark plug, first check whether all cable connectors are loose or in poor contact before inspecting the ignition system.

●Use a high-precision digital multimeter.

ignition coil testing methods, please refer to the ignition coil section in the "Electronic Fuel Injection Parts Fault Diagnosis and Troubleshooting " in the " Electronic Fuel Injection System" chapter of this manual.

Pull out the high-voltage cap , find a spark plug of the same model that is confirmed to be normal, install it on the high-voltage cap close to the cylinder head cover to do an ignition test to confirm whether the ignition coil is faulty .

Refer to the section on crankshaft position sensor in "Electronic Injection Parts Fault Diagnosis and Troubleshooting " in the " Electronic Injection System" chapter of this manual to check for abnormalities.

Ignition coil

on ignition coil disassembly , assembly and testing methods, please refer to the Ignition Coil section in the " Electronic Injection System" chapter of this manual, under the "Electronic Injection Parts Fault Diagnosis and Troubleshooting " .



5. Starting system

Notice before service

1. If current flows through the starter motor when the engine is not started , it can be determined that the starter motor is damaged and needs to be replaced.
2. Before repairing the starter motor, the engine shutdown switch must be turned to " " to prevent personal injury caused by the starter motor starting suddenly due to misoperation .
3. When the battery is low, the engine may not start quickly or the ignition current may not be provided .
4. Refer to the steps in the troubleshooting process to check or repair the startup system .
5. If there is a " " symbol on the right side of the step , you can click it to quickly jump to the corresponding step.

WARNING

●When the engine cannot be started , do not press the electric start button frequently. Frequent operation may cause overheating or damage of the starter motor, flooding of the cylinder, battery failure , etc.

Troubleshooting

Notice:

● Make sure the battery is fully charged and in good condition.

● Check if the main fuse (25A) and ECM fuse (15A) are blown . If the fuse is blown again after replacing it, check the circuit fault first .

starting motor should work under the following conditions:

a. Unlock the vehicle ;

b. Retract the side stand;

c . Turn the engine shutdown switch to " ";

d. Press the start button.

Starter motor does not run troubleshooting process:

1. Starter relay

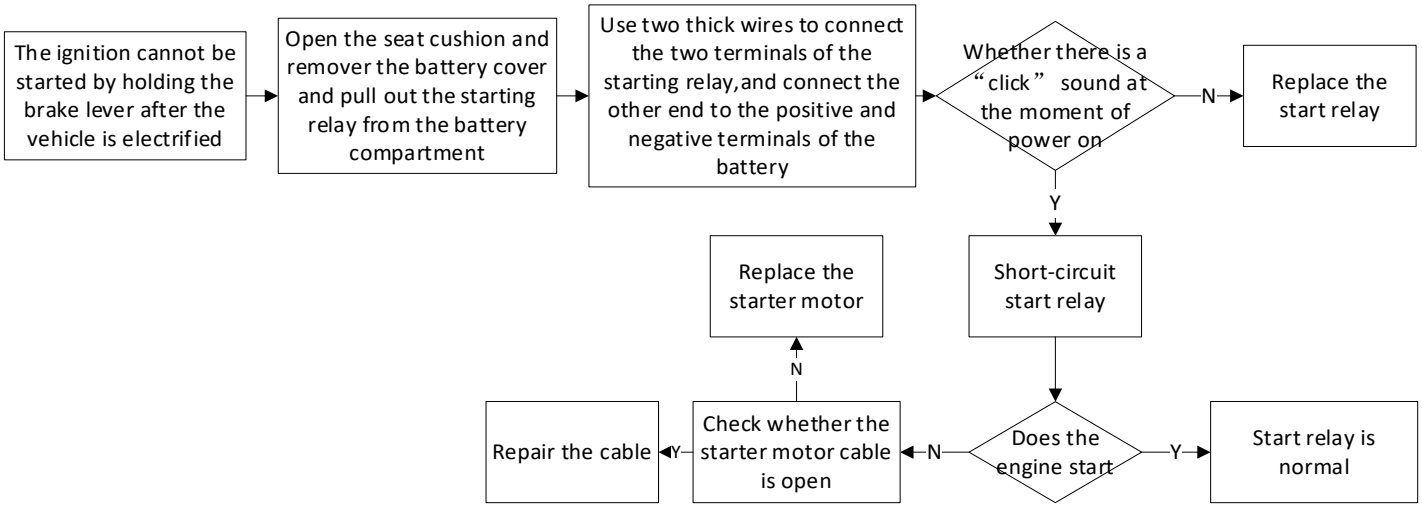

2. Starter motor

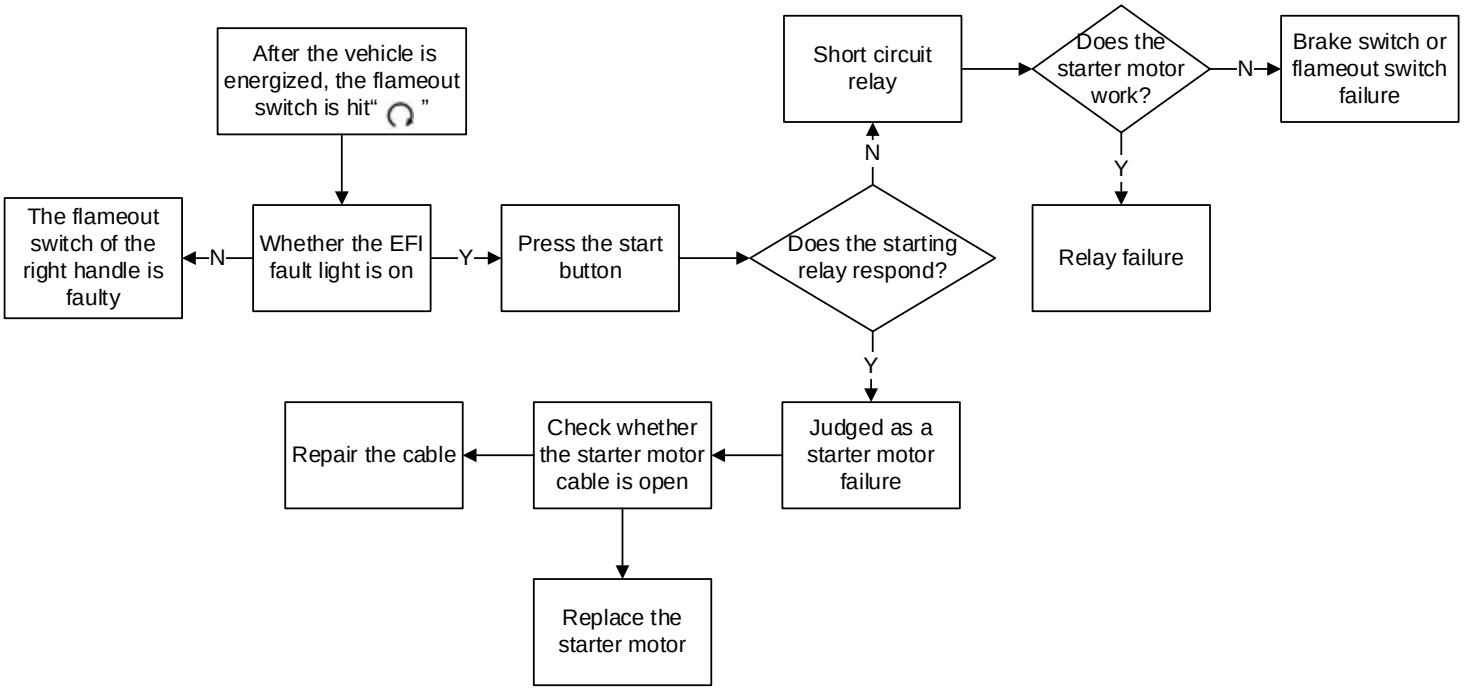

3. The starting motor runs slowly

Check whether the battery power is low;
Check whether the battery cable connector has poor contact;
Check whether the starter motor cable has poor contact;
Check the starter motor for abnormalities.

4. The starting motor works normally, but the engine cannot start

Check whether the starter gear system is faulty ;
Check for ignition system malfunctions .

Starting system layout

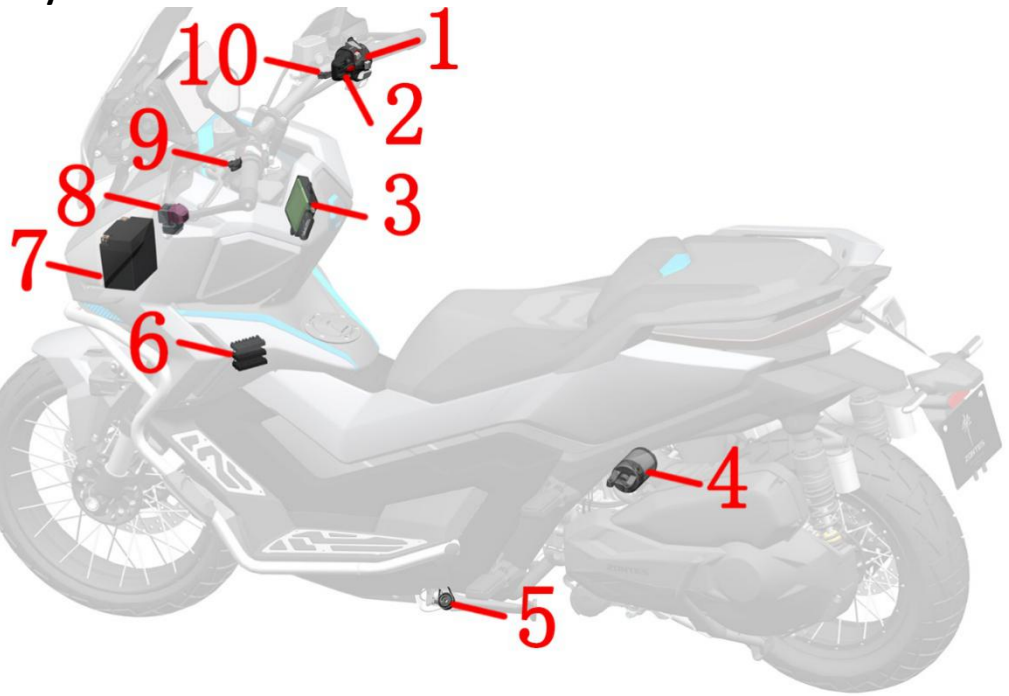

1- Right handlebar switch (ignition off switch, start button) 2- Right handlebar auxiliary switch (unlock vehicle) 3- PKE 4-Starter motor 5-Side stand ignition off switch 6- fuse box 7-battery
8-starter relay 9-rear brake switch 10- front brake switch)

Starting system electrical schematics

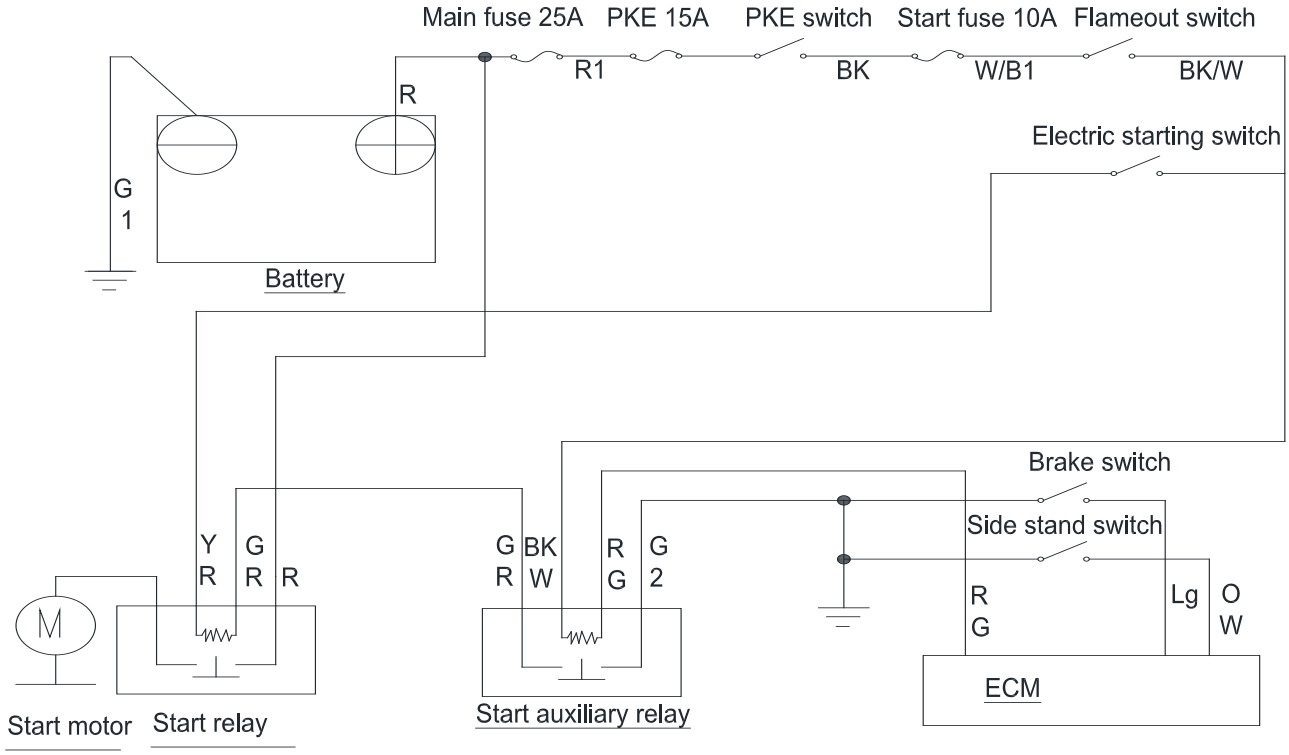

Starter motor

Notice:

●If the starter motor is removed for maintenance, replace the new O-ring and apply an appropriate amount of engine oil.

●Our company only sells the starter motor assembly , and does not sell O-rings and motor parts separately. The inner diameter of the O-ring is ϕ25 mm (0.98 in) and the wire diameter is 3 mm (0.12 in) .

1. Remove the starter motor

a. Remove the rear storage box by referring to the steps for removing the rear storage box . For details on the removal steps, refer to the section on removing the stepper motor and cleaning the carbon deposits in the throttle valve body in the Maintenance chapter .

b. Untie the Velcro and cable ties.



c. Use a 4 # hexagon socket to loosen the clamp bolt shown in the figure counterclockwise and pull the air filter outlet pipe out of the throttle valve body toward the rear wheel .

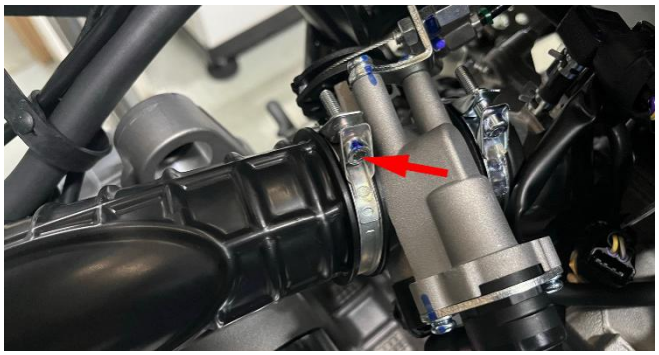

d. Pull the exhaust pipe to the right side of the vehicle to expose the two M6× 22 and M6× 25 bolts fixing the starter motor , and remove them with an 8 # sleeve. Open the red protective cap, remove the nut with a 10 # sleeve, remove the red positive wire, and screw the nut back to prevent loss. After removing the M6 bolt , remove the starter motor from the engine in the direction indicated by the large arrow .

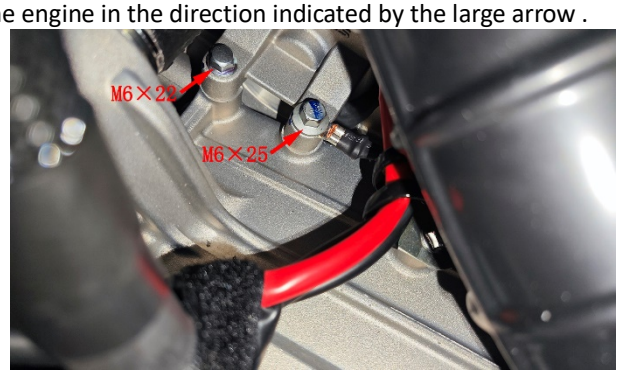

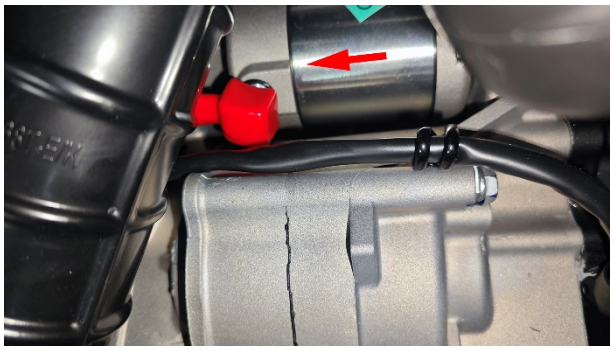

When reassembling, be careful not to miss the O-ring that comes with the starter motor , and align it with the teeth of the electric starter reduction gear. Note that the O-ring must be correctly assembled into the box. If the edge is cut, it will cause leakage. The torque of the two bolts that fix the starter motor is: 12±1.5 Nm (1.2±0.2 kgf.m, 9±1 lbf.ft) . And mark it with a marker.



2. Disassemble the starter motor

Notice:

●If the magnet pulls the pole toward the motor housing, the coil may be damaged.

●When installing the switch from the housing slot of the starter motor to the housing, make sure the commutator bar faces the rear side;

●When installing the starter motor rear cover, align the marking line with the index line;

●When installing the front cover of the starter motor, be careful to prevent damage to the oil seal lip of the electric shaft, and align the marking line on the front cover with the index line on the motor housing.

Disassemble and assemble the starter motor as shown below.

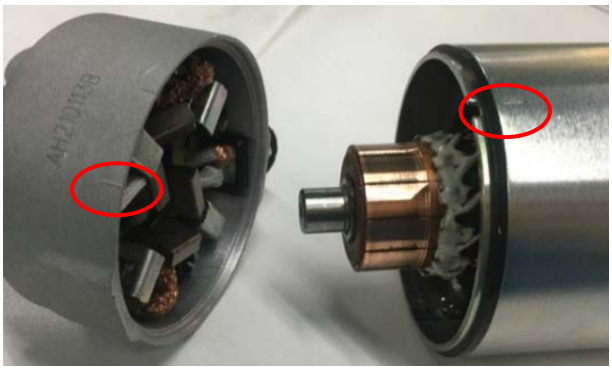



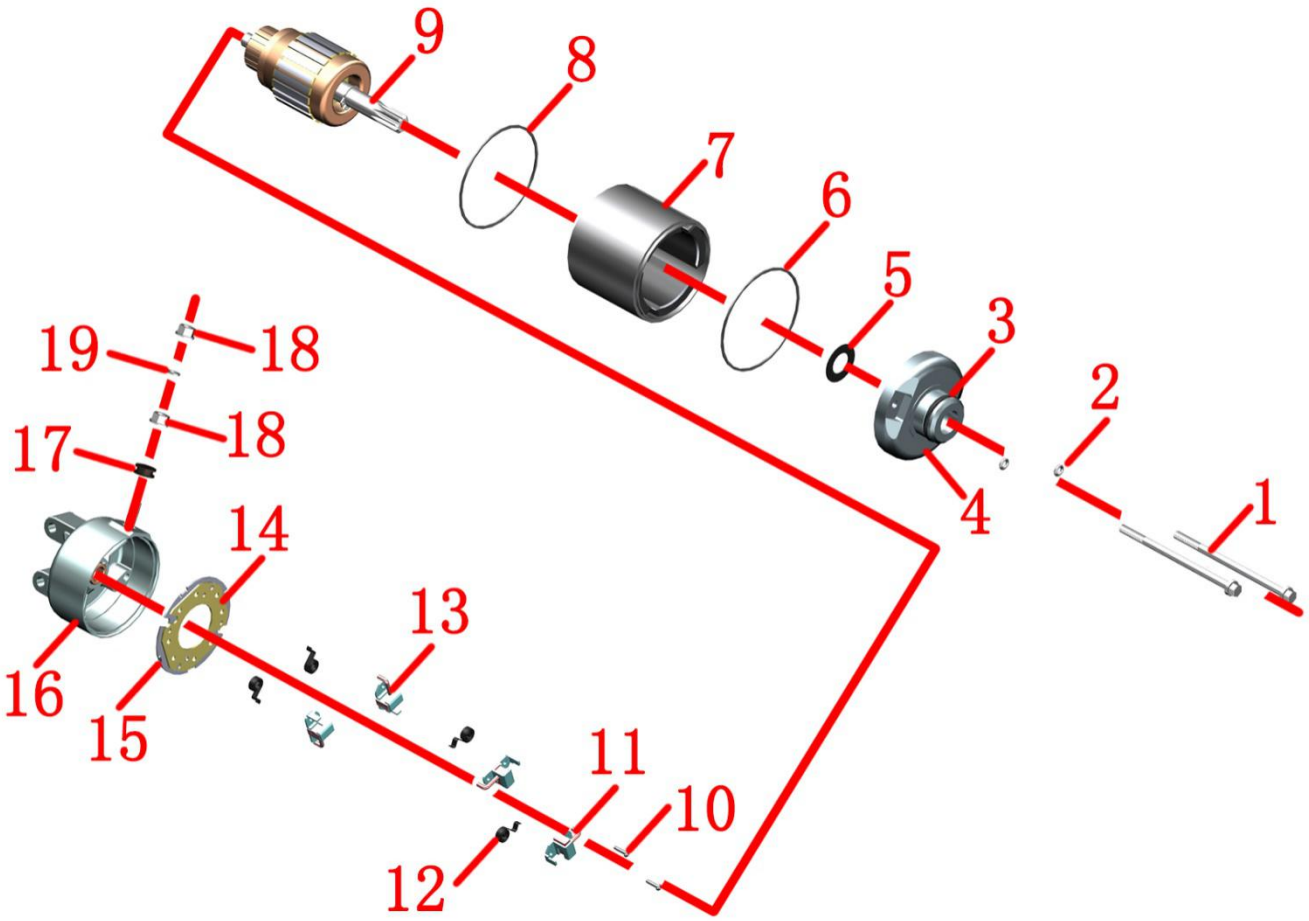

1-M 6 × 90 bolt × 2 2-O ring × 2 3-O ring 4-Starter motor front cover 5-gasket 6-rectangular seal 7-Starter motor outer shell 8-rectangular seal 9-electrode 10- screw × 2 11- Negative brush × 2 12-Coil spring × 4 13-Positive brush × 2 14-Brush rack 15-Brush rack insulation gasket 16-Starter motor rear cover 17-Insulation pad 18-Nut × 2 19-Gasket

Examine

Starter motor front cover:

Check the oil seal of the front cover for wear and damage;
Also check that the outer ring fits tightly against the front cover.



Starter motor rear cover:

Check the bushing of the rear cover for wear or damage;
Check the brush for damage and measure the brush length.
The maximum length is 11.5 mm (0.45 in).
The connectivity check of the back cover is as follows:
The positive brush is connected to the end of the cable; the end of the cable is not connected to the back cover; the negative brush is connected to the back cover.

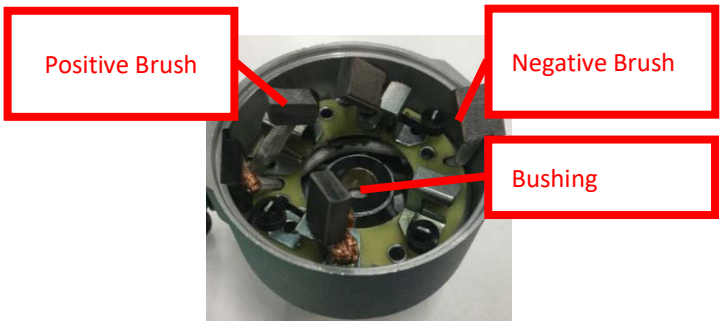

Electrocution:

Clean the metal debris on the switch and check whether the commutator bar has changed color;
Check that there is clearance between the commutator and the machine shaft.

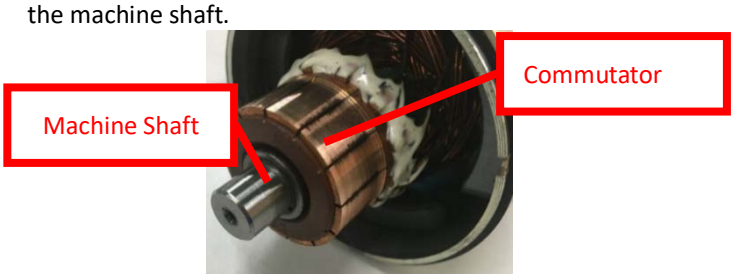

Check the starter relay

1. Operational inspection

a. Remove the hood. For detailed disassembly and assembly methods, see the " ZT368T-G Hood Disassembly and Assembly Video Tutorial ".



b. Unlock the vehicle, turn the engine off switch to " ", retract the side stand, hold the brake handle and press the start button. You should be able to hear the start relay closing. Otherwise, check the starting circuit.

2. Check the relay coil

2.1 Input Line

Adjust the multimeter to the DC voltage 20V position (if it is an automatic range multimeter, adjust it to the DC voltage position). Insert the red test lead into the rubber sleeve of the yellow/red wire and hold it close to the terminal.

Unlock the vehicle, turn the engine off switch to " ", and use the black test lead to select any bolt connected to the frame nearby. When you hold the brake handle and press the start button, the voltage between the yellow/red wire and the ground wire should be the battery voltage.

2.2 Ground Wire

Turn off the power of the vehicle and lock it. Set the multimeter to the beep position, connect one probe to the green/red wire and one probe to any bolt connected to the frame. It should be conductive when the start button is pressed.

3. Check the starting relay

Use a thicker wire to directly connect the 12V battery to the relay. Use the buzzer mode of the multimeter to measure the green/red and red-yellow wires. They should be conductive and disconnected after the battery is disconnected.

The rated voltage of the starter relay is DC 12V, the operating temperature is -40～+80℃, the operating voltage is DC≤7.5V (20℃), the reset voltage is DC≤3.5V (20℃), the coil current is below 4A (12V 20℃). The insulation resistance is DC500V megohmmeter 5MΩ or more.

The detection method is as follows:

After unplugging the relay, use the buzzer setting of the multimeter to measure pins 1 and 2. They should be in a normally closed state, and the buzzer of the multimeter will sound. Connect pins 3 and 4 to a normally open state, and the buzzer should not sound. Connect pins 1 and 2 to a battery or a DC12V power supply with wires. If the buzzer sounds when measuring pins 3 and 4, it indicates that the relay is normal. Otherwise, it is abnormal and needs to be replaced.

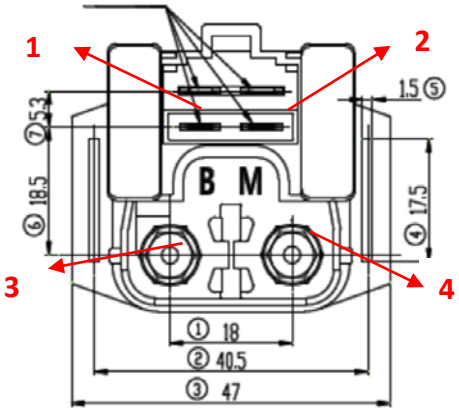

Internal wiring diagram

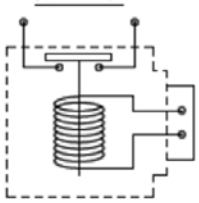

4. Disassembly and assembly of the starting relay

Open the white protective cover of the starter relay and use an 8# socket to remove the M6 bolt that comes with it. After taking out the wire, screw it back into the bolt to prevent it from being lost. Remove the other end in the same way. Pull out the relay connector.

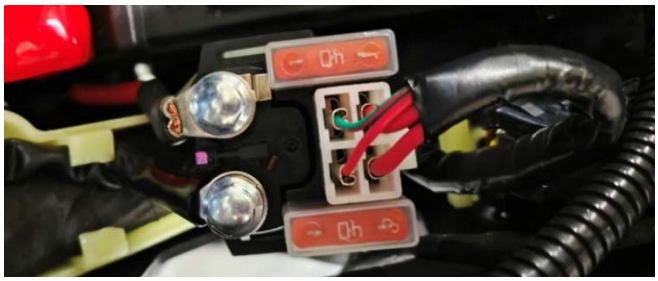

When reinstalling the relay, the red wire is installed in the threaded hole marked "B" on the relay, and the black wire is installed in the threaded hole marked "M" on the relay. Make sure the screws are tightened and the protective cap is put on, then plug in the relay connector.

6. Fuel supply system

Notice before service

1. Bending or twisting the control cable will affect smooth operation and may cause a short circuit or open circuit , resulting in loss of vehicle control.
2. Work should be carried out in an open and ventilated place. Smoking , using mobile phones and other behaviors that may cause sparks are prohibited at the work site .
3. Before operation , the high-pressure oil pipe should be depressurized as follows: unplug the fuel pump plug, start the engine and run it at idle speed until the engine is turned off. Turn the engine shutdown switch to " ", cut off the power of the vehicle and lock it.
4. After removing the throttle cable, do not fully open the throttle valve manually , as this may cause abnormal idling .
5. After removing the throttle valve body , use masking paper or clean non-woven fabric to block the air intake to prevent foreign matter from falling into the engine.
6. Do not damage or operate the throttle valve body, as this may cause abnormal throttle operation.
7. After removing the throttle body, prevent dust or foreign matter from entering the throttle hole or air passage . If necessary, clean it with dry compressed air.
8. Do not loosen or tighten the bolts or nuts marked with a marker on the throttle valve , as this may cause abnormal throttle opening and closing and idle speed control .
9. Do not use carburetor cleaner .
10. Throttle valve body parts not specified in this manual must not be disassembled .
11. If there is a “ ” symbol on the right side of the step , you can click it to quickly jump to the corresponding step.

CAUTION

●After reinstalling the battery or EFI components, the EFI system needs to be reset. For detailed operations , refer to the driver's manual or the precautions in the throttle valve body section of this manual.

Fuel tank removal

Notice:

● The vehicle must be parked on a flat, stable ground or a lift.

● Wait until the engine is completely cooled before operating.

●When draining coolant , wear waterproof gloves to prevent it from getting on your skin.

●The disassembly site must be ventilated and fire prevention must be taken into consideration . Please refer to the previous chapters for details and will not be repeated here.

● Use the oil pump first or wait until the fuel in the tank is almost consumed before disassembling .

● Pay attention to protecting the oil outlet of the oil pump . The high-pressure oil pipe can only be pulled out axially. Be careful not to pull or press the oil outlet radially.

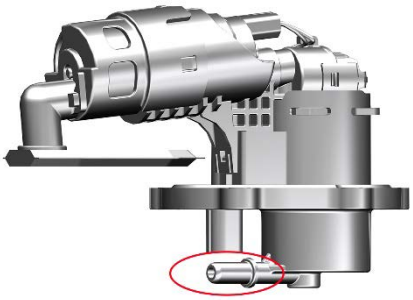

1. Disassemble the fuel tank assembly

a. Follow the steps in the pre-service instructions to consume the fuel in the high-pressure fuel pipe.

b. Refer to the steps for removing the covering parts to first remove the bumper, fuel tank lock decorative cover, pedal side cover assembly, lower air duct, seat cushion, storage box, and radiator air duct.



c. Refer to the steps for disassembling the engine and unplug the wiring harness plug , oil pipe interface and water pipe interface on the engine . Remove the plug of the rear wheel speed sensor. Park the vehicle in a flat and wide place, turn the steering wheel to the right, place a stool of appropriate height under the direction of the arrow, and lift the rear wheel of the vehicle off the ground.

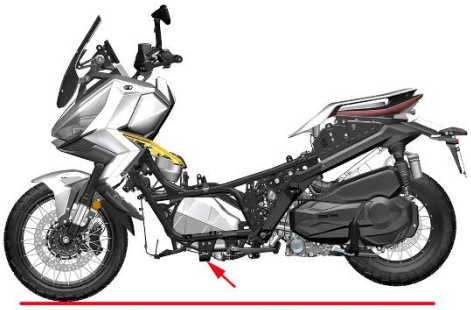

d. Use a 17 # spanner to fix the nut (1), and use a 14 # sleeve to loosen the bolt (2). Remove the four nuts (1) one by one, and do not remove the bolt (2) for the time being .

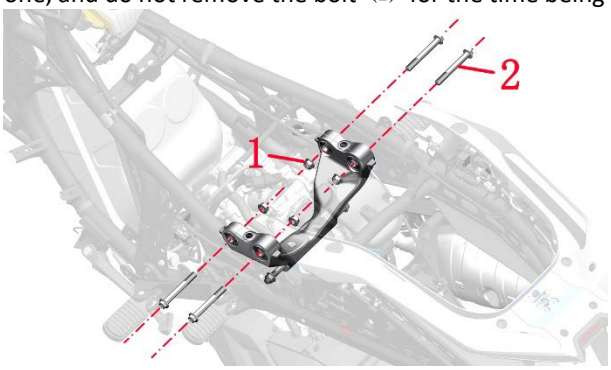

e. Remove the left plug (3) and the right plug (4). Use a 14 # spanner to fix the nut (6), and use a 14 # socket + ratchet spanner to loosen the bolt (5) . Remove the two nuts (6). One person holds the rear wheel, and the other person removes the two bolts (5) on the rear shock absorber. After removing the bolts, the rear wheel can be gently placed on the ground. One person holds the engine, and the other person removes the four bolts (2) on the frame. After removing the bolts, the engine can be gently placed on the ground.

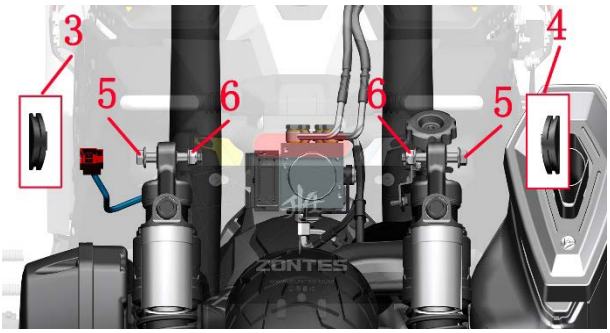

f. Use a 4# hexagon socket to remove the six M5 × 30 bolts (7), pick up the fuel tank lock (8), find the plug pointed by the arrow, unplug the plug and remove the fuel tank lock (8).

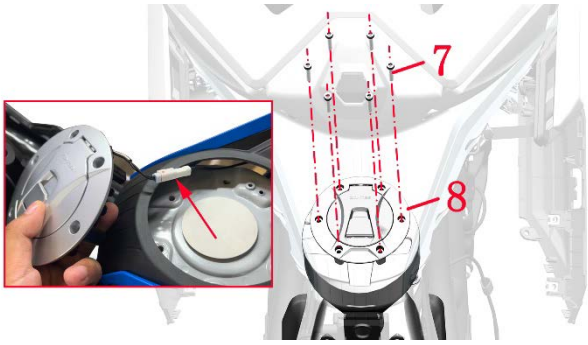

g . Unplug the two plugs on the drive box (10), remove the two bolts (9) with a T25 hexagonal wrench , and remove the drive box (10).



h. Press the anti-drop buckle of the oil level sensor plug ① and unplug the plug ① . Remove the oil pump plug ② in the same way. Press the anti-drop buckle of the high-pressure oil pipe (11) on the oil pump end and unplug the high-pressure oil pipe (11) along the axis of the oil pump outlet.

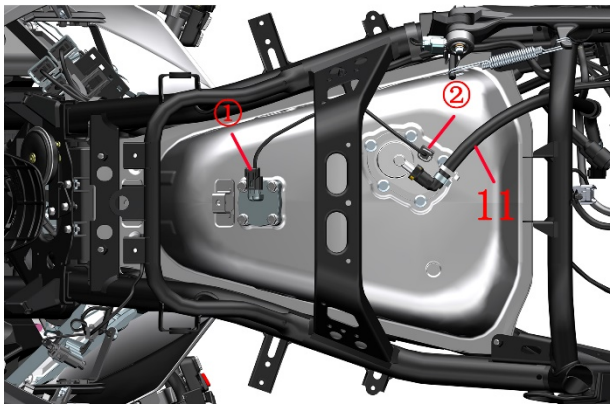

i. Use a ratchet wrench + 10# socket to remove the four M6 × 1 6 bolts and remove washers (13) and (14).

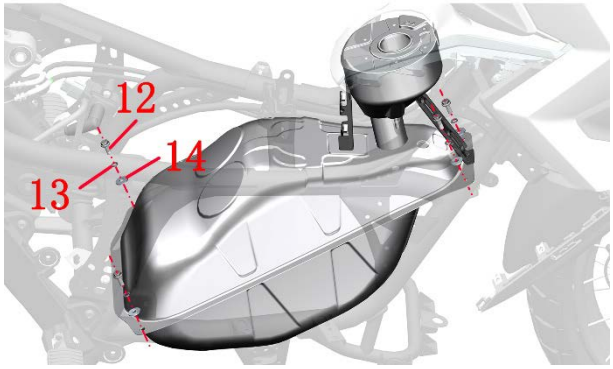

j. Slightly lift the fuel tank assembly from the rear end , move it backward until the fuel tank filling port safely passes under the frame, and then remove the fuel tank assembly upwards.

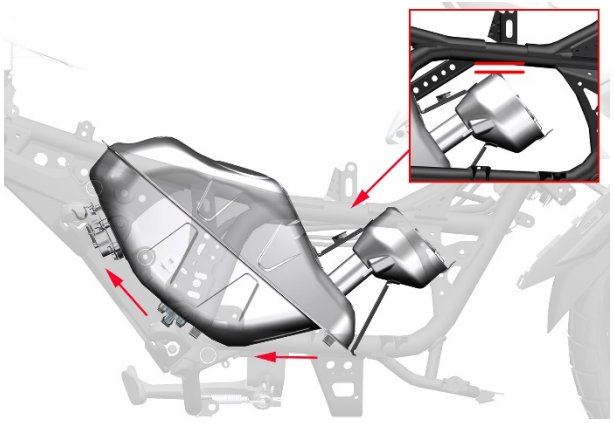

2. Remove the fuel pump

Turn the fuel tank assembly over so that the fuel pump is facing upwards and placed firmly . You can use a small wooden chair to turn it over so that the chair surface is grounded and place the fuel tank assembly on it.

Use a 10 # socket to loosen the five M6 × 20 bolts (1) diagonally , grab the high-pressure oil pipe bracket (2), remove the bolts (1) completely, and then remove the oil pump (3) .



When reassembling, pre -tighten diagonally first and then tighten the five bolts (1) , otherwise the sealing rubber ring of the fuel pump (3) will be compressed unevenly and easily cause leakage, resulting in safety hazards .

Remark :

fuel pump is a precision component that needs to be assembled in a dust-free workshop and requires strict testing, so it is forbidden to disassemble it by yourself. Therefore, the fuel pump disassembly process is not explained here .

3. Remove the oil level sensor

Use a 10 # sleeve to remove the four M6 × 16 bolts (1) and pull the sensor (2) outward . Be careful not to pull it forcefully to avoid deformation of the float connecting rod and increase the deviation of the oil display.

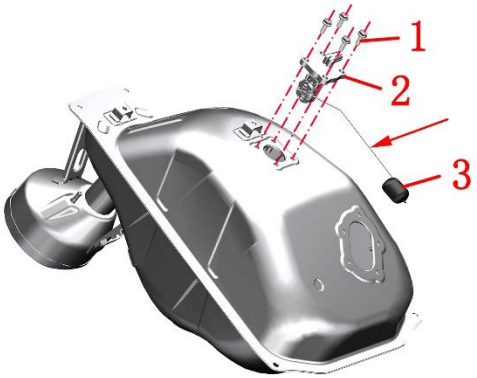

When reassembling, you need to pre-tighten the 4 bolts diagonally first and then tighten them . Otherwise, the uneven compression of the sealing rubber ring of the oil level sensor may easily lead to leakage and cause safety hazards .

4. Remove the external parts of the fuel tank assembly

a. Battery rubber pad (1) is pasted on the fuel tank shell and is difficult to remove. If you need to remove it, you can use a hot air gun to heat it slightly and then tear it off, or use a detergent to remove self-adhesive stickers to remove it.

b . Remove the adhesive strip directly (2).

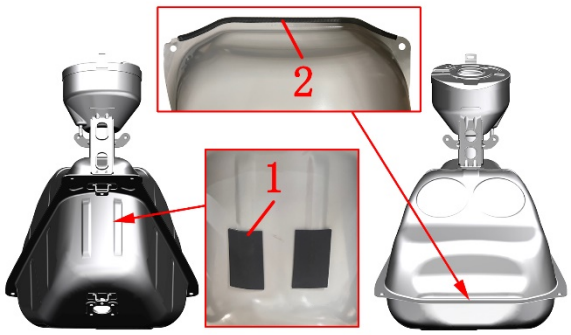

Examine

1. Fuel pressure test

test methods, refer to the fuel pump section in the Maintenance chapter .

2. Fuel pump inspection

Unlock the vehicle and turn the engine ignition switch to " " . You should be able to hear the sound of the fuel pump running . If you do not hear the sound of the fuel pump running , turn off the engine and power off first .

Refer to the previous fuel tank removal steps to unplug the fuel pump plug.

Use a multimeter to measure the voltage at the cable end of the fuel pump plug . Unlock the vehicle, turn the engine off switch to " " and the fuel pump will accumulate pressure for about 5 seconds . During this period, the battery voltage should be measurable.

If the battery voltage can still be measured without starting the engine after pressure accumulation, you need to check whether the fuel pump relay is normal. If the relay is normal, the fuel pump is abnormal and needs to be replaced.

3. Oil level sensor

Use the resistance range of a multimeter to measure the resistance. The lowest position (empty oil): 287 ~ 313Ω , the highest position (full oil): 27 ~ 79Ω .

Pull the float connecting rod ; there should be no sticking during rotation and the contacts should be in good contact.

Check the appearance of the float and there should be no damage.

7. Cooling system

Notice before service

1. For the corresponding precautions regarding coolant (antifreeze), please refer to the radiator section in the " Maintenance " chapter of this manual .
2. Check the cooling water pipes ; check the coolant level. Adding and draining coolant are described in detail in the radiator section of the " Maintenance " chapter and will not be repeated in this section.

Tool :

			
Clamp pliers	multimeter	Adjustable air pressure source	Homemade head*

* It can be sealed with a soft rubber plug, or a hose can be folded in half and tied with a rope or wire as a plug for the small tube to test the sealing of the water tank inlet. You can find a water pipe with an inner diameter of 16 mm and cut a section . One end can be firmly assembled with a suitable air pipe joint and a clamp to test the sealing of the water tank inlet , the main water tank , and the small water tank .

9. If there is a “  ” symbol on the right side of the step , you can click it to quickly jump to the corresponding step.



● If you open the radiator cap when the engine is not completely cooled, the coolant may spray out and cause burns. Be sure to open the radiator cap only after the radiator and engine have cooled down.

Troubleshooting

1. Engine temperature is too high :

The coolant temperature display of the instrument is abnormal or the water temperature sensor is abnormal ;
b. Thermostat abnormality;
c. Insufficient coolant ;
d. Radiator , water pipe, water tank are blocked ;
e. Air enters the cooling system;
f. Cooling fan failure;
g. Cooling fan relay failure (see the section on electronic fuel injection relay in the chapter on electronic fuel injection system) .

2. Engine temperature is too low:

The coolant temperature display of the instrument is abnormal or the water temperature sensor is abnormal ;
b. Thermostat abnormality;
c. Cooling fan relay failure (see the section on electronic fuel injection relay in the chapter on electronic fuel injection system) .

3. Coolant leakage

a. Water pump seal failure;
b. The O - ring is damaged or aged;
c. The radiator cap is damaged;
d. The sealing gasket is damaged or aged;
e. Water pipe rupture;
f. The radiator is damaged .

Coolant system distribution diagram

368G、250G

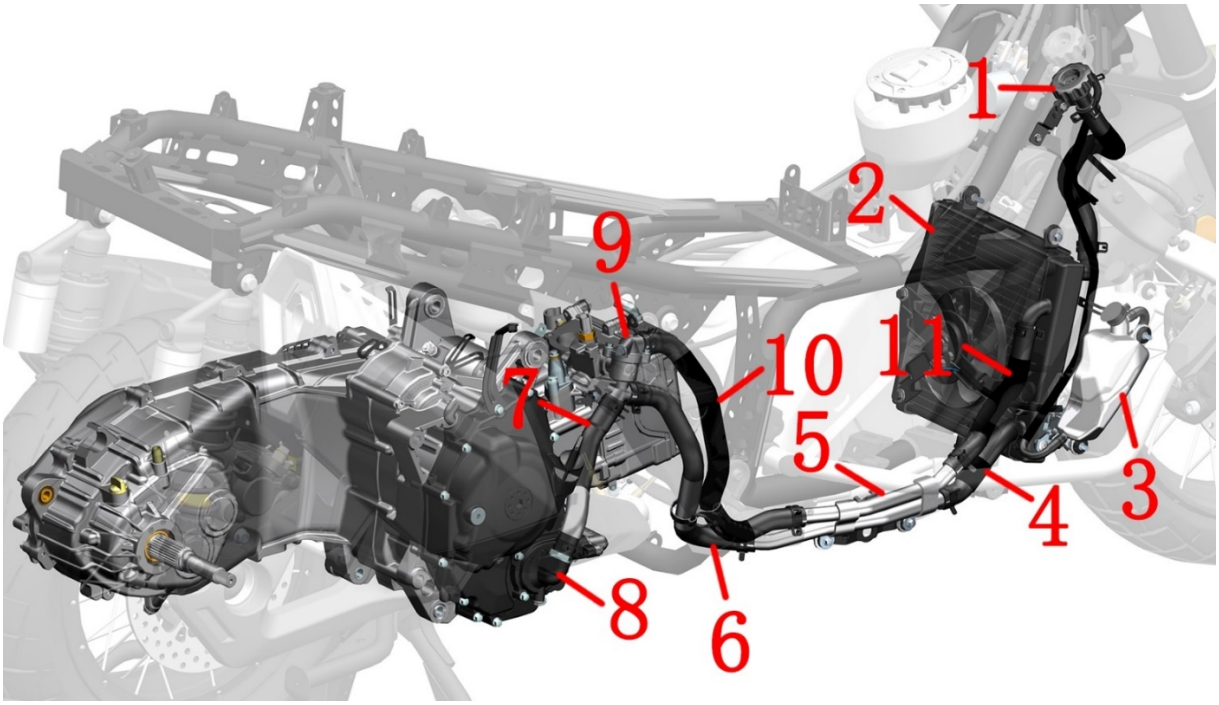

1 - Main water tank filling port 2 - Main water tank 3 - Auxiliary water tank 4 - Main water tank outlet pipe 5 - Aluminum water pipe 6 - Engine water pipe 7 - Water pump cover water inlet pipe 8 - Water pump cover assembly 9- Thermostat assembly 10- Thermostat water outlet pipe 11- Main water tank water inlet pipe

ETC：

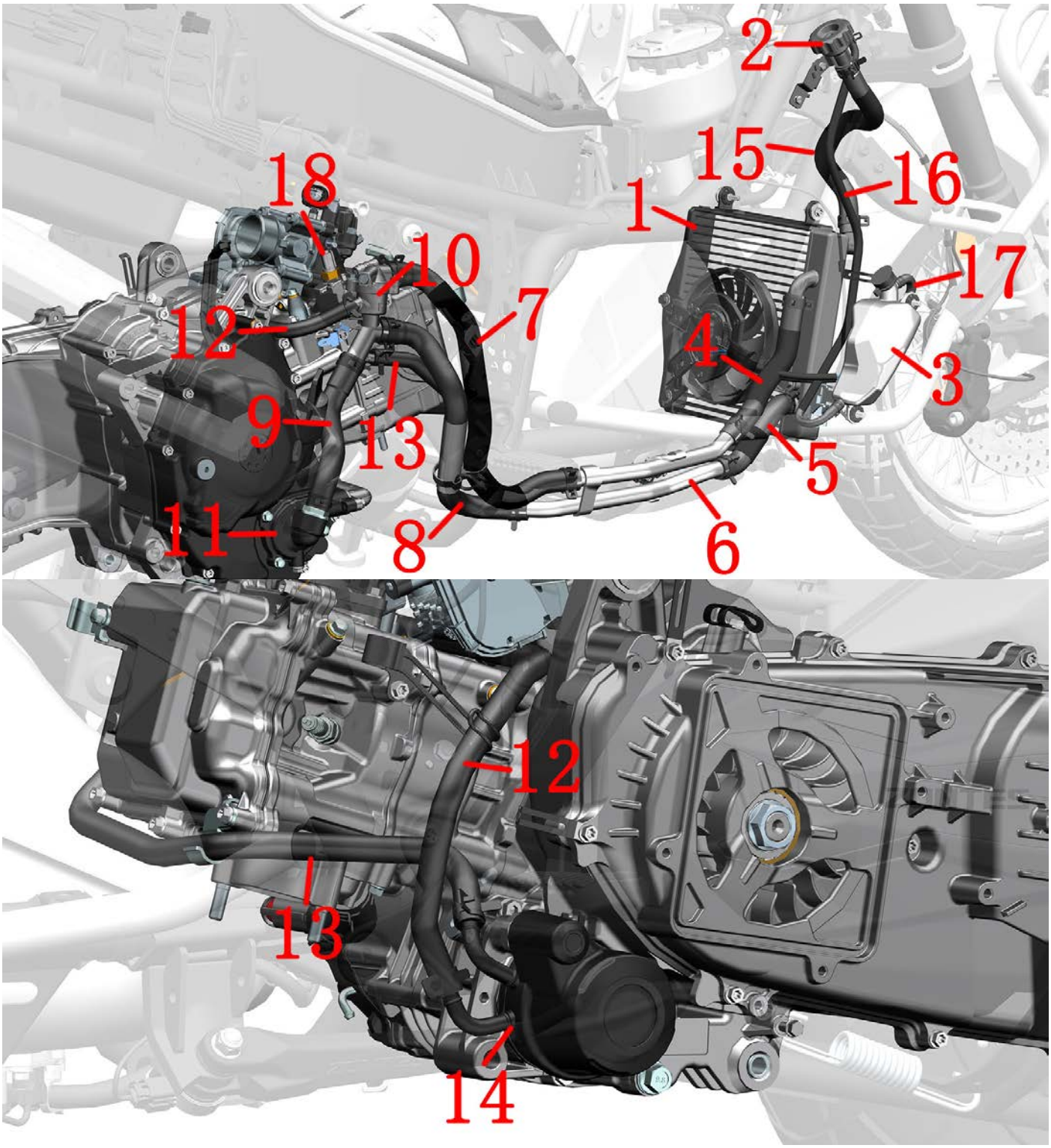

1- Main water tank 2- Main water tank filling port 3- Auxiliary water tank
4- Main water tank water inlet pipe 5- Main water tank outlet pipe 6- Aluminum water pipe
7- Thermostat water outlet pipe 8- Engine water pipe 9- Water pump cover water inlet pipe
10- Thermostat 11- Water pump cover assembly 12- Oil Cooler Water Inlet Pipe
13- Oil Cooler Water Outlet Pipe 14- Oil Cooler 15- water tank water inlet connection water pipe
16- auxiliary water tank connecting water pipe 17- Sub Water Tank Leak Pipe 18- communal sensor of water and oil

Coolant flow diagram

368G、250G

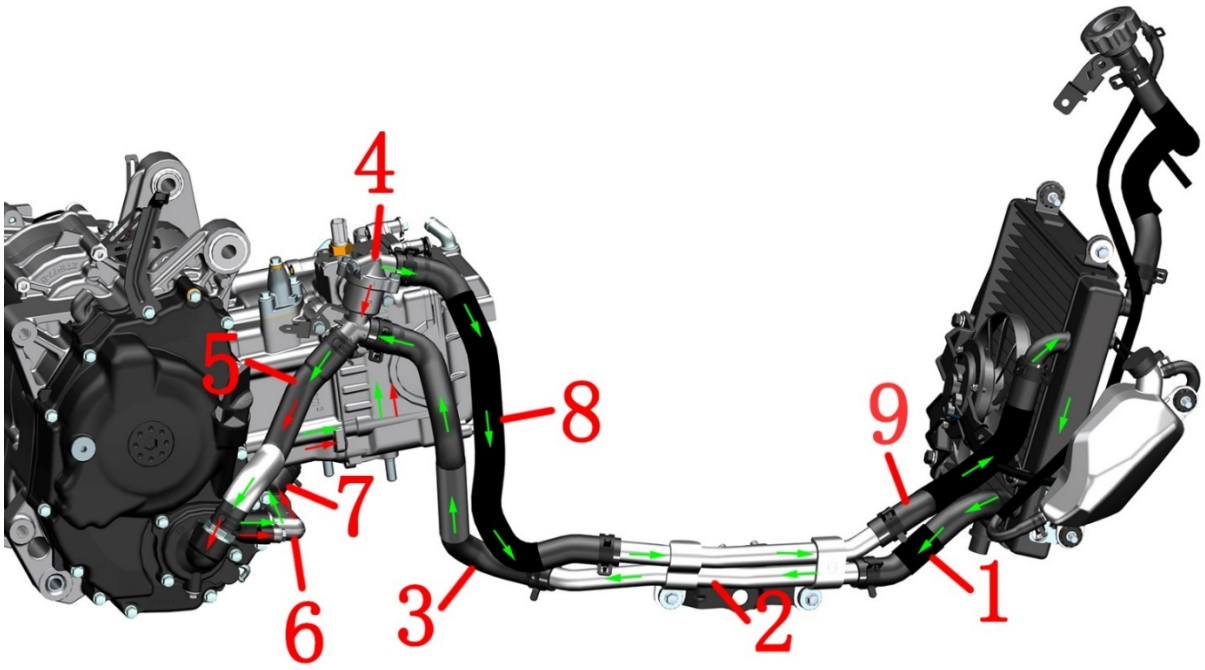

1- Main water tank outlet pipe 2- Aluminum water pipe 3- Engine water pipe
4 - Thermostat 5 - Water pump cover water inlet pipe 6 - Water pump cover water outlet pipe joint
7 - Water pump cover water outlet pipe 8 - Thermostat water outlet pipe 9 - Main water tank water inlet pipe

Cooling System :

Small loop (indicated by green arrows) :

Water pump → water pump cover outlet pipe joint → water pump cover outlet pipe → cylinder → thermostat → water pump cover inlet pipe

Large cycle (indicated by green arrows) :

Water pump → water pump cover outlet pipe joint → water pump cover outlet pipe → cylinder → thermostat → thermostat outlet pipe → aluminum water pipe → main water tank inlet pipe → main water tank → main water tank outlet pipe → aluminum water pipe → engine water pipe → thermostat → water pump cover inlet pipe

368G ETC：

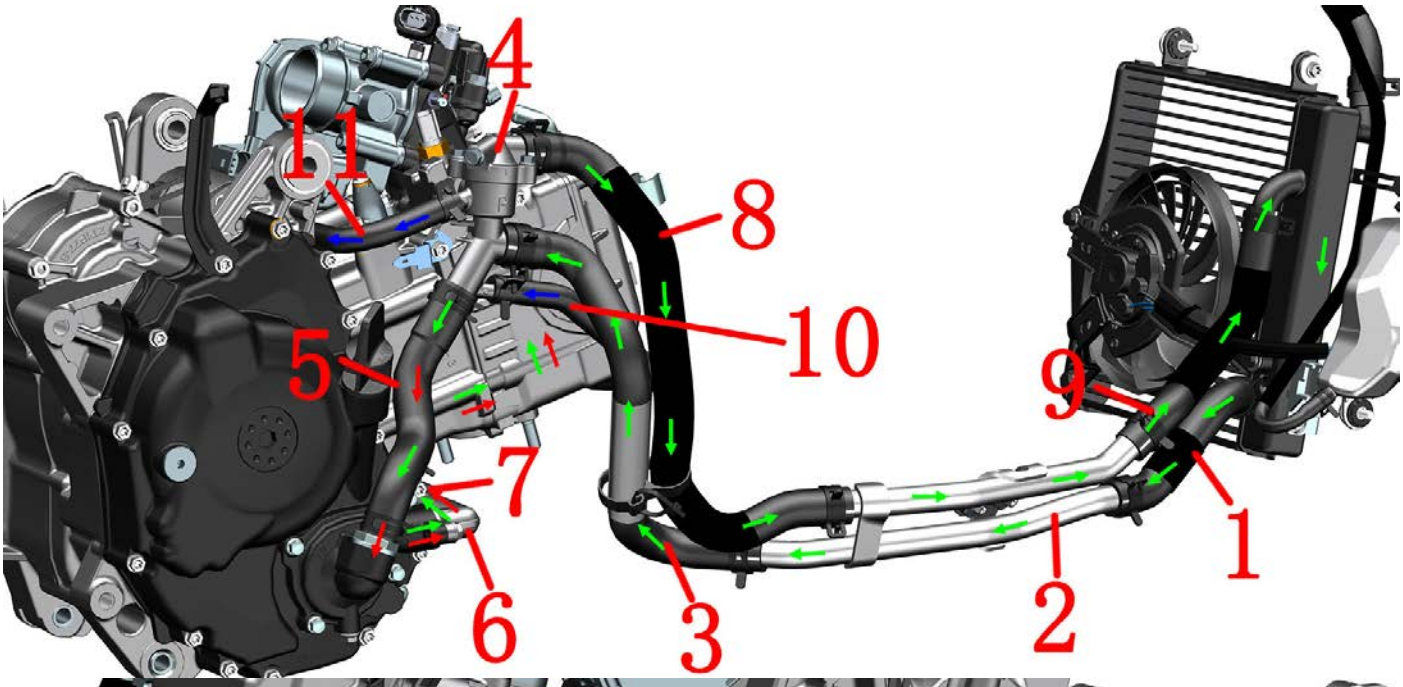

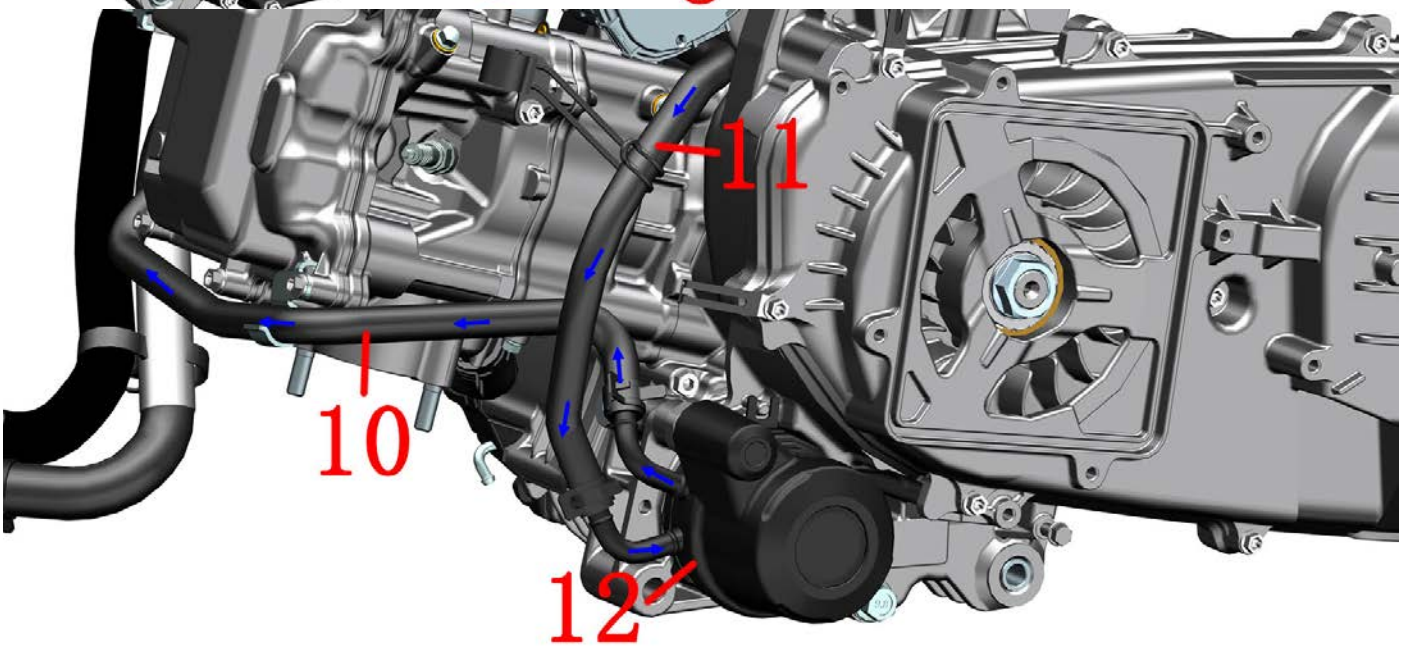

1- Main water tank outlet pipe 2- Aluminum water pipe 3- Engine water pipe
4 - Thermostat 5 - Water pump cover water inlet pipe 6 - Water pump cover water outlet pipe joint
7 - Water pump cover water outlet pipe 8 - Thermostat water outlet pipe 9 - Main water tank water inlet pipe
10- Oil Cooler Water Outlet Pipe 11- Oil Cooler Water Inlet Pipe 12- Oil cooler

Cooling System :

Small loop (indicated by green arrows) :

Water pump → water pump cover outlet pipe joint → water pump cover outlet pipe → cylinder → thermostat → water pump cover inlet pipe

Large cycle (indicated by green arrows) :

Water pump → water pump cover outlet pipe joint → water pump cover outlet pipe → cylinder → thermostat →Oil Cooler Water Inlet Pipe→Oil cooler→Oil Cooler Water Outlet Pipe→Thermostat→Thermostat outlet pipe→Aluminum water pipe→Main water tank inlet pipe→Main Radiator Assembly→Main water tank outlet pipe→Aluminum water pipe→Engine Water Pipe→Thermostat→water pump cover inlet pipe

Oil cooler loop (indicated by blue arrows) :

thermostat →Oil Cooler Water Inlet Pipe→Oil cooler→Oil Cooler Water Outlet Pipe→Thermostat

Cooling system disassembly

Notice:

● Before disassembly, refer to the coolant draining steps in the radiator section of the Maintenance chapter to drain all the coolant .

●During the disassembly process, you should wear protective measures such as waterproof gloves and protective glasses , and avoid coolant contact with the skin .

● Make sure to wait until the engine, radiator and muffler are completely cooled before disassembling them.

Coolant system clamp /clamp distribution diagram

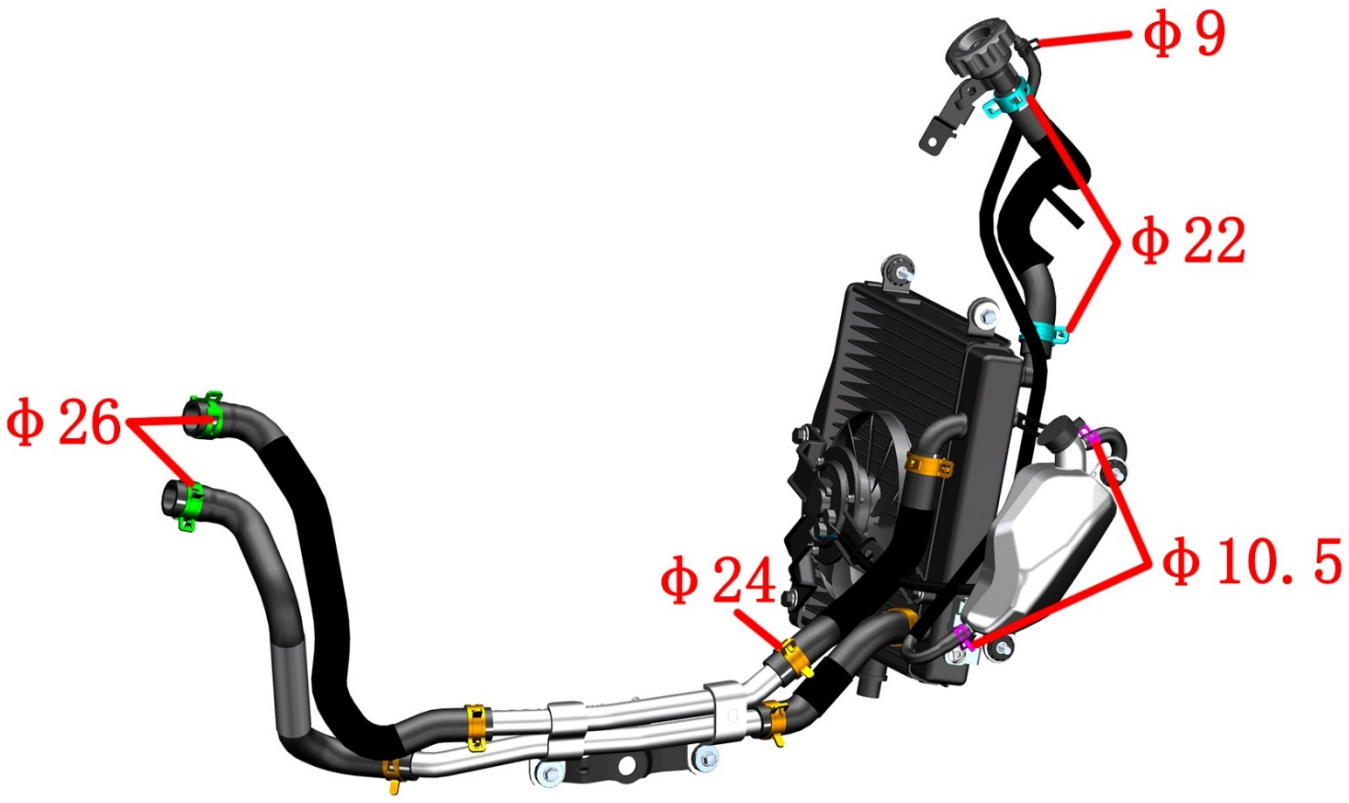

Thermostat assembly and small loop

368G、250G：

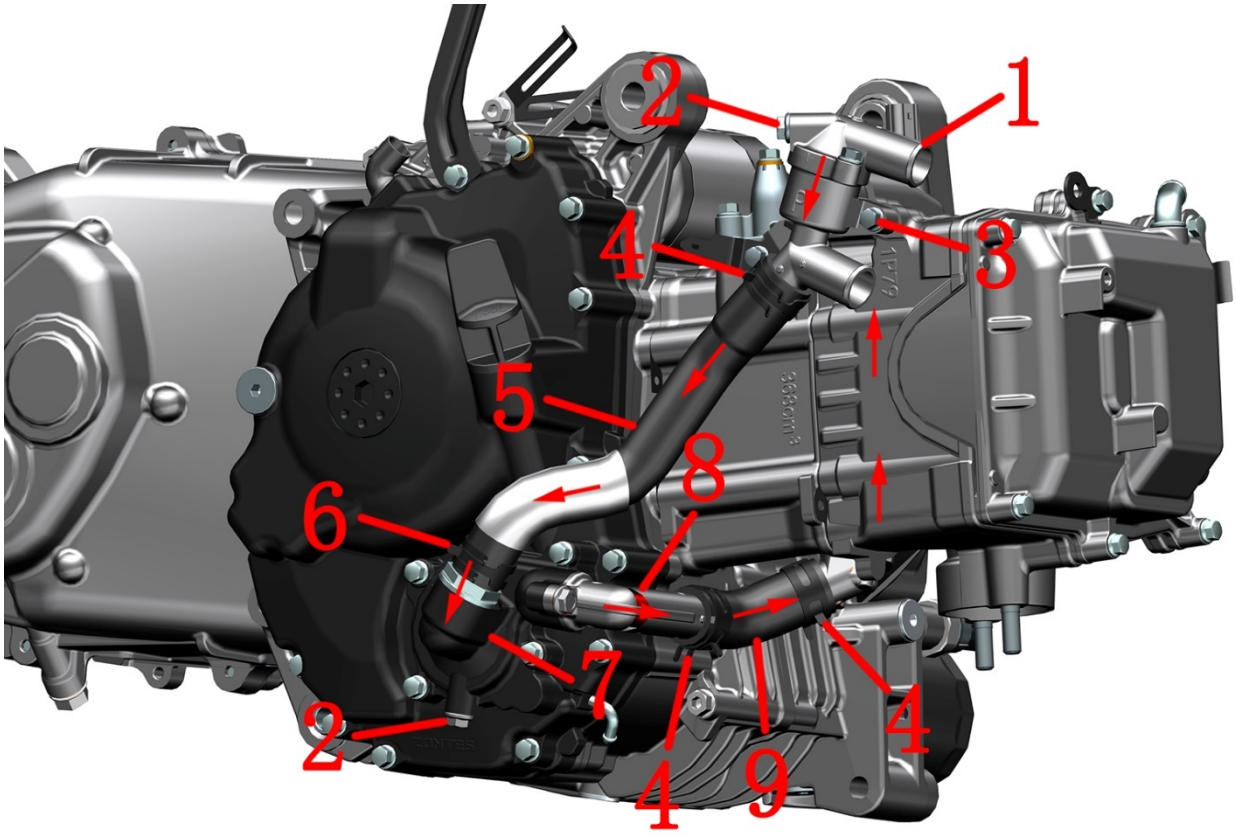

1 - Thermostat assembly　2 - M6× 12 bolt* 2　3 - M6×22 bolt * 2
4 - Water pipe clamp (ϕ 26) * 3　5 - Water pump cover water inlet pipe　6 - Water pipe clamp (ϕ 24)
7 - Water pump cover assembly　8 - Water pump cover outlet pipe joint　9 - Water pump cover outlet pipe

Note: Bolt (2) at the thermostat is the exhaust bolt, and bolt (2) at the water pump cover is the coolant discharge bolt . Both have ϕ 5.6×ϕ1 O-rings , which need to be replaced once removed.

a. Use clamp pliers to remove clamps (4) and (6) respectively , and separate water pipes (5) and (9) . Remove the clamp from the water pipe .

b. Use an 8 # sleeve to remove the two bolts (3) , remove the thermostat assembly (1) and the oxygen sensor bracket (10) , and remove the 16.5×1.95 O-ring (11) from the thermostat assembly . The O-ring (11) must be replaced once removed .

ETC：

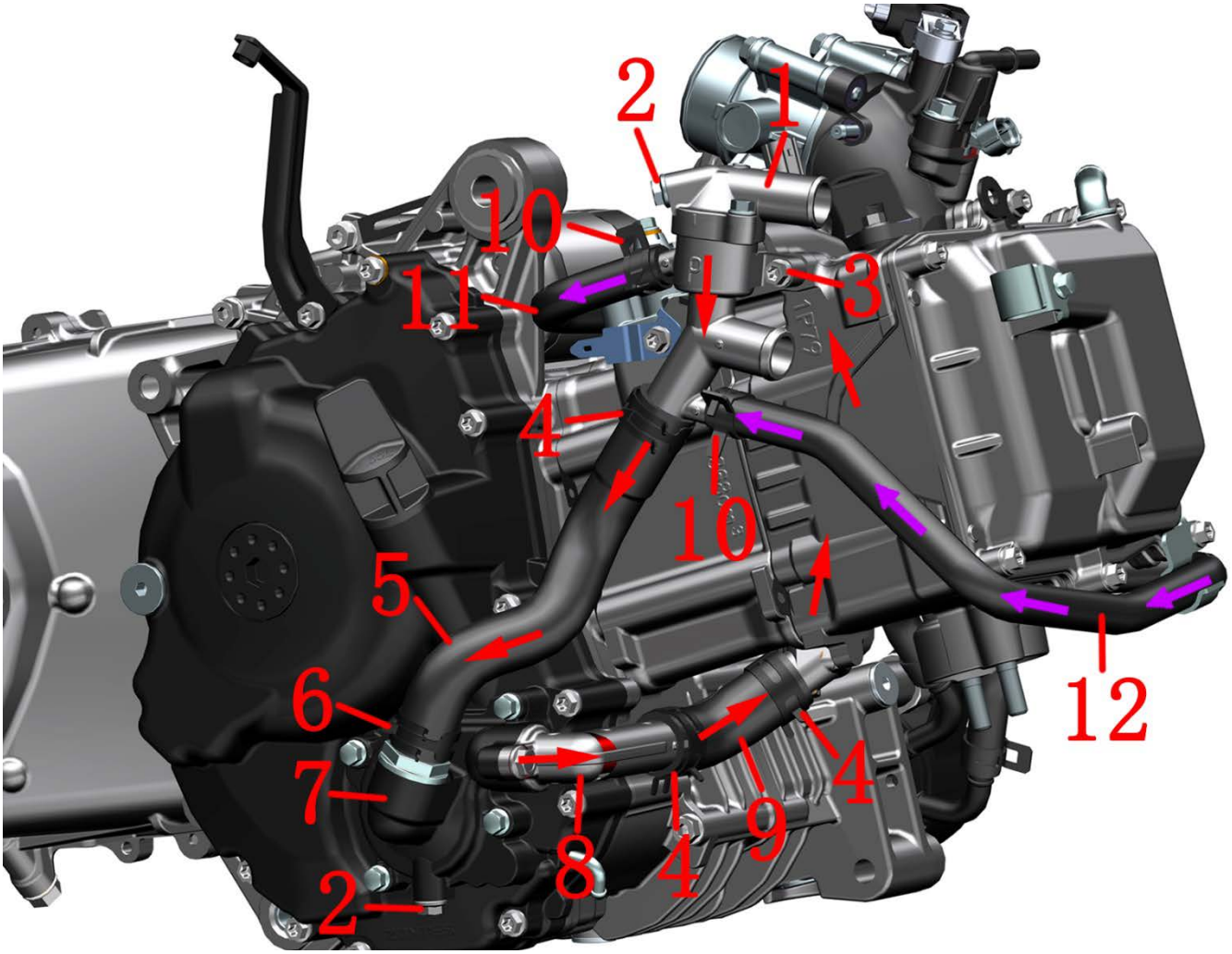

1-Thermostat assembly 2-M6× 12 bolt* 2 3 - M6×22 bolt * 2 4 - Water pipe clamp (ϕ 26) * 3 5 - Water pump cover water inlet pipe 6 - Water pipe clamp (ϕ 24) 7 - Water pump cover assembly 8 - Water pump cover outlet pipe joint 9 - Water pump cover outlet pipe
10- Hose Collar (ϕ16)*4 11- Oil Cooler Water Inlet Pipe 12- Oil Cooler Water Outlet Pipe
13-Oxygen Sensor Bracket 14-18.7×1.9 EPDM O-ring

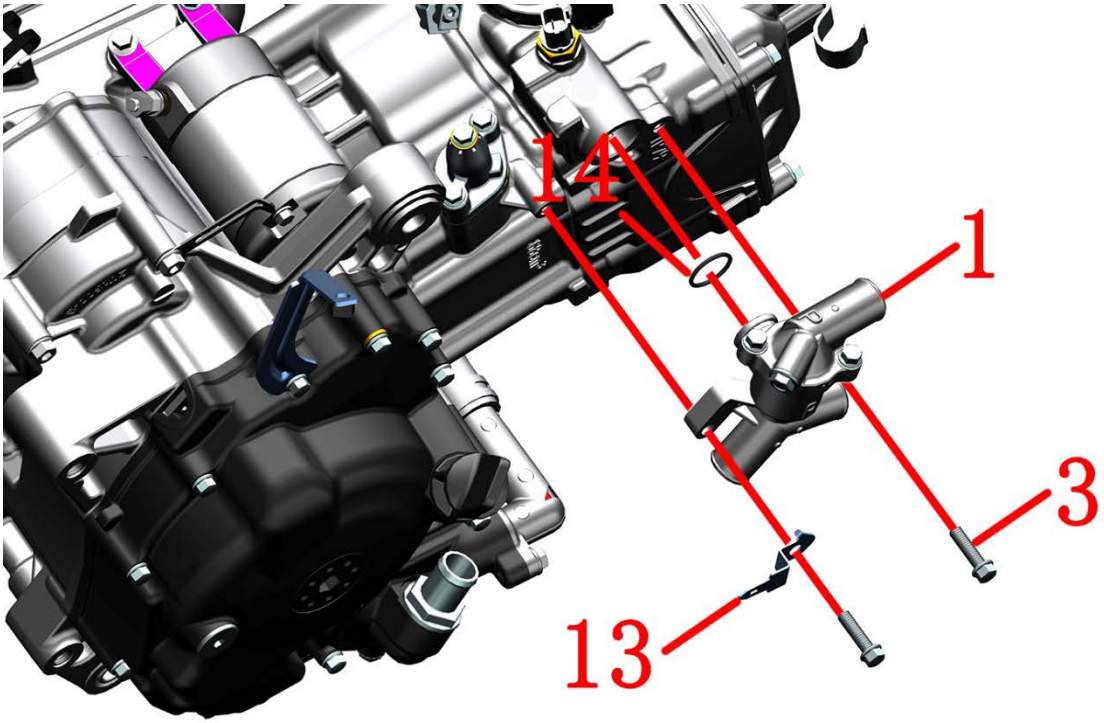

Note: Bolt (2) at the thermostat is the exhaust bolt, and bolt (2) at the water pump cover is the coolant discharge bolt . Both have ϕ 5.6×ϕ1 O-rings , which need to be replaced once removed.

a. Use clamp pliers to remove clamps (4)、(6)、(10) respectively , and separate water pipes (5)、(9)、(11)、(12) . Remove the clamp from the water pipe .

b. Use an 8# socket to remove the 2 bolts (3), take out the thermostat assembly (1) and the oxygen sensor bracket (13), then remove the 18.7×1.9 EPDM O-ring (14) from the thermostat assembly. The O-ring (14) must be replaced with a new one once removed.

reassembly , clean the joint surface and make sure that the O-ring is not missing and is properly assembled . The clamp should be stuck inside the boss to prevent it from loosening. Bolt (3) Torque: 12±1.5 Nm (1.2±0.2 kgf.m, 9±1 lbf.ft) .

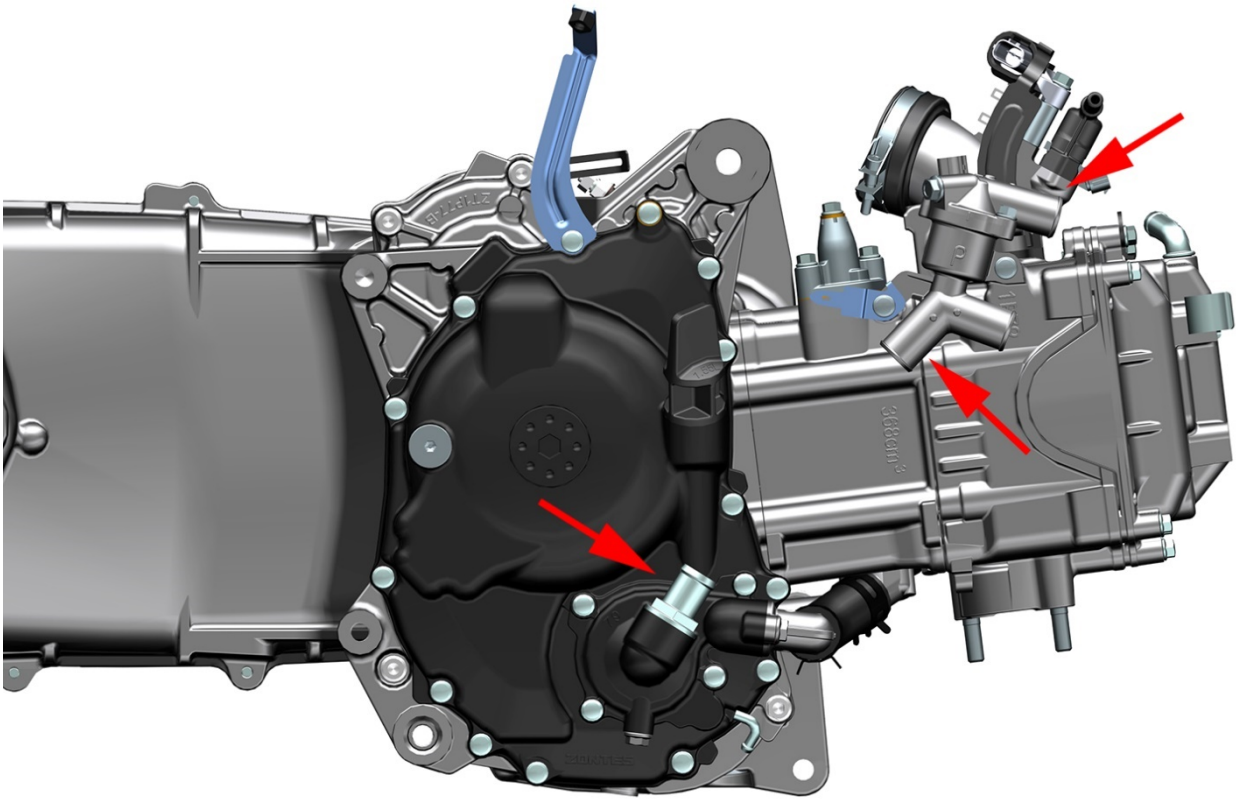

Cooling system accessories

Notice:

Specialized ventilation tooling (gas pressure reducing valve , air gun, sealing tube) is required for testing.

● After the soaking inspection is completed, the water stains should be wiped clean in time , or blown dry with a dust gun. If you use a dust gun to blow dry the main water tank and the small water tank, be careful not to use too much wind pressure and keep away from the cooling fins to avoid damage or deformation of the cooling fins .

●When doing air tightness testing, unless the gas pressure is specifically stated , 160kPa (1.63 Kgf/cm ^{2} , 23.2 psi) compressed air , immerse the parts in water and let them stand for 10 s. No bubbles should be seen . If there are bubbles , it means it is leaking and needs to be replaced.

● The heat sink fins are allowed to have a small amount of lodging and deformation. If the lodging area is too large, it will affect the heat dissipation effect and it is recommended to replace it. A small amount of deformation can be straightened with a small flat-blade screwdriver.

● It is prohibited to use high-pressure water guns or high-pressure air to directly flush or blow the heat sinks of the main water tank and small water tank .

● Before further testing, you should first check whether there are signs of leakage . If there is a slight leakage, you can try to repair it, otherwise you should replace it.

1. Main water tank

Check whether the buffer glue is aged and cracked.

Use a self-made plug to plug ports A and C , and check the tightness from port B. The pressure is 160 kPa (1.63 Kgf/cm ^{2} , 23.2 psi) gas, ensure that there is no air leakage at the nozzle, immerse the water tank in water and wait for 10 seconds to observe whether there are bubbles

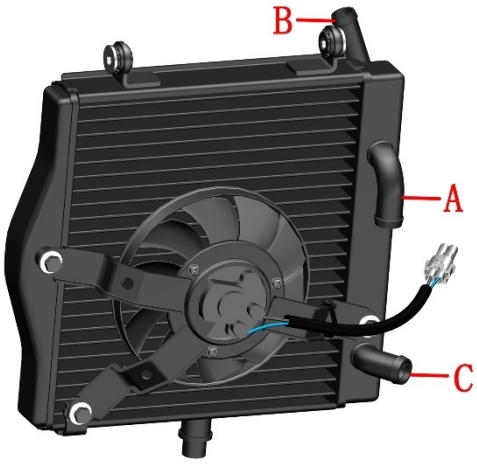

Check whether the fan and the grille are firmly assembled and the fan blades are not stuck when rotating . Check whether the buffer rubber is aged or cracked. Check whether the fan cable is damaged.

the fan plug is positive, and the black pole is negative. Find a battery with sufficient power and connect the wires according to the positive and negative poles , and check whether the fan draws air backwards .

You can use compressed air with low pressure to blow from the back to the water tank from a long distance to clean the foreign matter on the surface. Or you can use a water gun with low pressure to spray the heat sink from a long distance to clean the foreign matter on the surface.

2. Water tank filling port

Notice:

Specialized ventilation tooling (gas pressure reducing valve , air gun, sealing tube) is required for testing.

● After the water soaking inspection is completed, the water stains should be wiped clean in time.



2.1 Overall sealing inspection

Seal the small tube and ventilate the large tube to check the air tightness. The pressure is 160 kPa (1.63 Kgf/cm ^{2} , 23.2 psi) gas, ensure that the pipe opening is leak-proof, place the water inlet into the water and let it stand for 10 seconds to observe whether there are bubbles.

2.2 Pressure relief valve inspection

100 kPa (1.02 Kgf/cm ^{2} , 14.5 psi) of compressed air , put the water inlet into the water and let it stand for 10 s. There should be no bubbles in the small tube . Increase the compressed air to 1 1 0kPa (1.12 Kgf/cm ^{2} ,16 psi) bubbles should appear.



3. Auxiliary water tank

First check whether the rubber cover is old or cracked , if so , replace it. If it looks good, then check the airtightness.

Seal the two small water outlets and open the black rubber cover of the water tank to check for air tightness.

Continue to seal the small water outlet, fill the auxiliary water tank with water , turn the auxiliary water tank upside down, and observe whether the water tank rubber cover is leaking. If there is leakage, it is unqualified. After completing the sealing inspection, pour out the water, remove the plug and let the auxiliary water tank dry naturally or blow it dry with a dust gun .

4. Water and oil shared sensor

sensor detection and disassembly and assembly methods, please refer to the section on EFI parts fault diagnosis and

troubleshooting in the chapter " EFI System" .

5. Thermostat



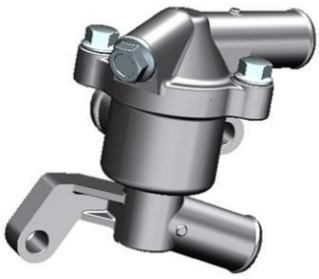

5.1 Inspection

Check the appearance for damage or leakage.

Simple test method (testing on the whole vehicle) :

the cold engine , open the water inlet cap immediately. If the liquid level does not fluctuate, the thermostat is normal, otherwise it is abnormal . When the water temperature is lower than 70 ℃ (158F) , the thermostat should be in the valve closed state. When it is higher than the initial opening temperature, the expansion valve of the expansion cylinder gradually opens, and the circulating coolant in the radiator begins to flow.

After the temperature rises, check the water inlet pipe of the small water tank again. You should be able to feel obvious signs of water flow or the temperature of the pipe wall, otherwise the water pump or water channel is blocked.

the temperature rises slowly after reaching 80 °C (176 °F) , the thermostat is working properly. If the water temperature continues to rise rapidly and boiling water suddenly overflows when the internal pressure reaches a certain level , it indicates that the valve is stuck .

If it is stuck or not closed tightly, you can remove it for cleaning or repair first , otherwise it should be replaced.



5.2 Fault phenomenon

When the water temperature gauge indicates high, the engine temperature is overheated , but the coolant temperature in the water tank is not high, the radiator is not hot when touched by hand, and the small water tank fan rotates normally, it indicates that the large circulation is blocked or obstructed, and it can be preliminarily judged that the thermostat is abnormal.

There are generally two situations when the thermostat is abnormal:

a . The main valve is in a closed state for a long time. Regardless of the water temperature, the coolant circulates according to the small circulation route, causing the engine to overheat.

b. The main valve is in the open state for a long time, which will cause the water temperature to rise slowly during startup. Especially in winter, the slow rise in coolant temperature causes the engine to not operate at normal temperature, resulting in the engine temperature being too low.

5.3 Disassembly

How to check the thermostat assembly :

Block the two ports and introduce 181 kPa (1.85 Kgf/cm ^{2} , 26.3 psi) of compressed air , put it into water and let it stand to observe whether there are bubbles. If there are bubbles, it means it is leaking.

368G、250G:

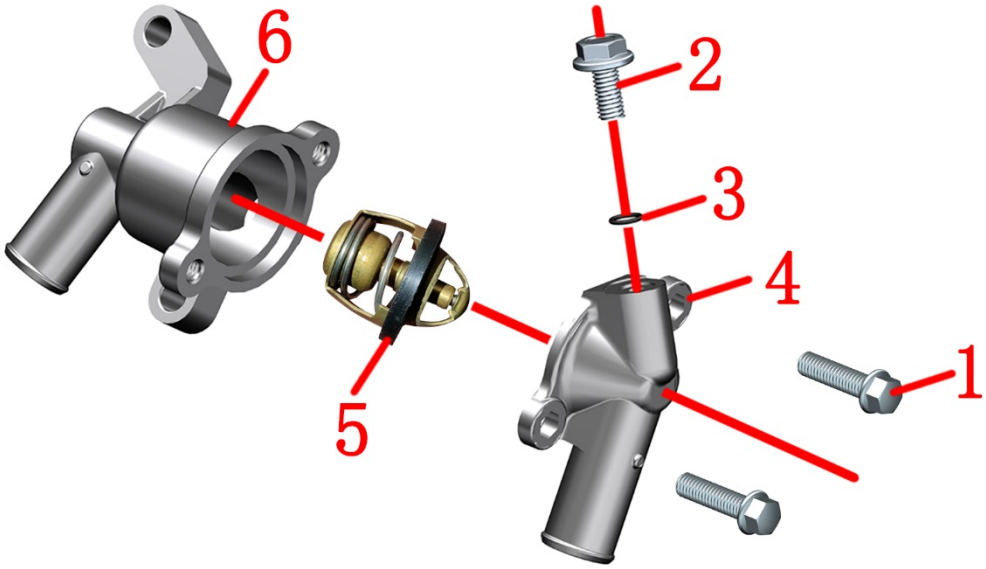

1- M6 ×22 bolts*2 2-M6 ×12 bolts 3-ϕ 5.6×ϕ1 O-ring 4-Thermostat upper housing 5-Thermostat core 6- Thermostat lower housing

ETC:

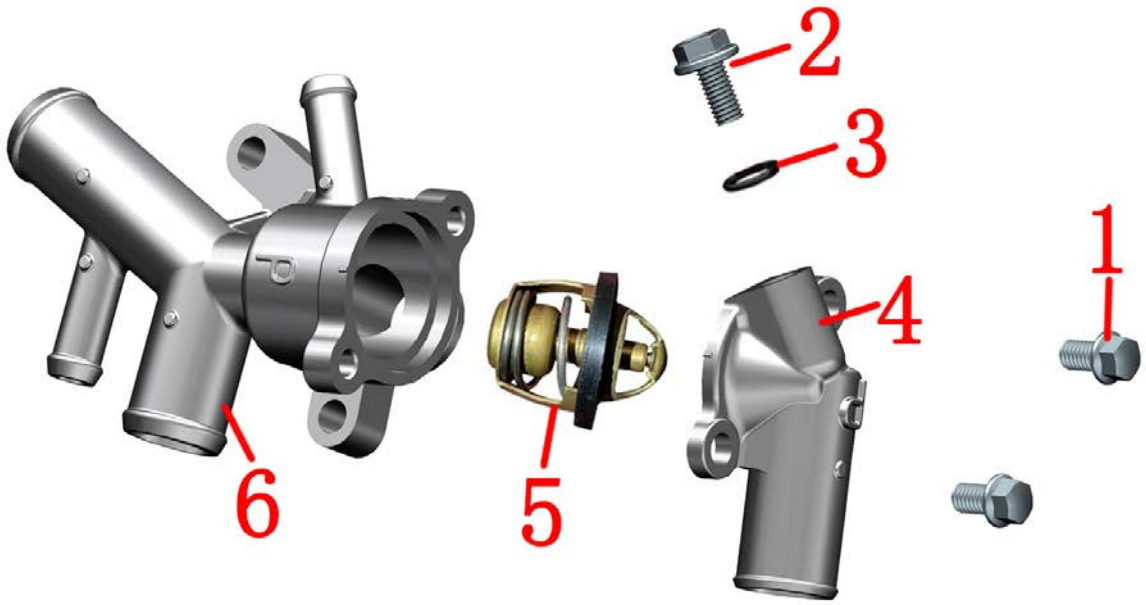

1-M6 ×22 bolts*2 2-M6 ×12 bolts 3-ϕ 5.6×ϕ1 O-ring 4-Thermostat upper housing 5-Thermostat core 6- Thermostat lower housing

Thermostat core inspection:

lift of the main valve in a temperature-adjustable constant temperature heating device . If any of them does not meet the specified value, it should be replaced. Alternatively, use a thermometer , water, heater and container to test.

Thermostat initial opening temperature 80～84℃（176～183 F), the core moves 0.1mm (0.004 in) can be considered as the initial opening. Full opening temperature is 95℃ (20 3 F), the core movement is greater than 3.5 mm (0.14 in).

simple test method is to put the core into a high temperature resistant container, pour boiling water into it and soak it for a while, use pliers to take out the core, and observe whether the valve can be fully opened . If it can , it indicates that it is normal. After the temperature gradually decreases, the valve should be able to reset until it is fully closed again.

Before re- assembly , the mating surfaces should be cleaned and the O-rings should not be missed .

6. Water pipes

Check the surface of each water pipe for cracks, bulges and other defects. Block one end of the water pipe , ventilate the other end and put the water pipe into the water outlet to check whether there are bubbles. If there are bubbles, replace them.

7. Check the water pump cover assembly

Check the two places indicated by the arrows for leakage. The bolts are for draining coolant. If there is leakage, remove the bolts and replace the O-rings . If there is leakage at the right crankcase cover water pipe , try to pull out the water pipe (it is difficult to pull out because it is coated with sealant before press-fitting) , clean it, re-apply sealant and reinstall it; or directly replace the right crankcase cover assembly.

a small amount of coolant to leak from the leaking pipe. However, it is abnormal if there is continuous leakage when the engine is running. You need to remove the water pump cover to check whether the seal has failed.



8. Braking system

Notice before service

1. The content of this chapter requires certain maintenance experience . It is recommended to go to a qualified maintenance unit for inspection or maintenance.
2. Frequent inhalation of dust produced by brake pads , regardless of its composition, may have a certain impact on health. Inhalation of dust particles should be avoided .
3. Never use a dust gun or brush to clean the brake assembly. Use a vacuum cleaner instead.
4. Avoid dripping brake fluid onto the paint surface of covering parts or the surface of components . If accidentally splashed, rinse with clean water immediately .
5. When removing the front and rear disc brake master cylinders, ensure that the brake fluid in the oil cup is in a horizontal position . Do not turn it upside down to prevent air from entering, which may affect the braking effect and may cause brake failure and personal injury in severe cases.
6. The steps for replacing brake fluid and bleeding air are the same. For detailed steps, see the Brake Fluid section in the Maintenance chapter .
7. When there is oil on the brake pads or brake discs , the braking force will be reduced. The contaminated brake pads should be replaced, and the oil on the brake discs can be removed with a good quality degreasing cleaner .
8. After removing the main pump oil cup cover, prevent dust, water, etc. from entering .
9. If you need to add brake fluid after maintaining the brake system , you must use newly opened DOT4 brake fluid. Do not mix it with other brake fluids .
10. When the vehicle is powered on, switch and unplug the plug of the ABS hydraulic control unit. Excessive voltage may damage the hydraulic control unit. The vehicle must be powered off before maintenance .
11. The hydraulic control unit is a precision part and non- professionals are prohibited from disassembling it .
12. If there is a “  ” symbol on the right side of the step , you can click it to quickly jump to the corresponding step.

DANGER

● If brake fluid is swallowed by mistake, contact a poison control center or hospital immediately; if it gets into eyes, rinse with clean water and seek medical attention immediately.
● Keep brake fluid away from children and pets.
● The vehicle must be parked on a flat, stable ground or a lift .

WARNING

●You must wear protective gloves / protective clothing /protective goggles /protective mask to perform brake system maintenance.
● It is strictly forbidden to flush the main pump directly with high-pressure water .

Troubleshooting

Brake handle soft

a. Air enters the brake system oil circuit
b. Brake fluid leakage
c. The brake pad or brake disc is oily
d. Brake caliper or disc main pump piston seal is worn
e. Brake pad or brake disc wear
f. The disc brake caliper is oily
g. The disc brake master pump is oily
h. Disc brake caliper does not slide flexibly
i. Insufficient brake fluid
j. The brake oil circuit is blocked
k. Distortion and deformation of brake disc
l. Disc brake caliper piston wear and stickiness
m. Disc brake master pump piston wear and stickiness

Brake handle hard

a. Brake oil circuit is blocked
b. Disc brake caliper piston wear and stickiness
c. Disc brake master pump piston wear and stickiness
d. Disc brake caliper cannot slide normally
e. Brake caliper or disc main pump piston seal is worn

Disassembling the disc brake master cylinder and caliper

Notice:

● The protective measures and hazards of brake fluid have been explained before and will not be repeated here.

● The two copper pads at the brake hose of the disassembled caliper and main pump must be replaced to prevent leakage. The surface where the disc brake oil pipe bolt and the copper pad meet can be reused if there is no scratch.

● Disassembling the master cylinder and caliper requires high hands-on skills and is recommended to be done by professional personnel or maintenance units . The replaced waste brake fluid should be handed over to professional units for recycling and proper disposal .

● The operator is responsible for the consequences caused by improper disassembly or assembly, and it is not covered by the three guarantees.

● Operate in a dry, dust- free or dust-free environment .

Disassembling the front disc brake master cylinder

a. First use a 12 # sleeve to loosen the disc brake oil pipe bolt (1). After loosening, tighten it slightly until there is no leakage . Otherwise, it will be more difficult to loosen the bolt later. Use a flat-blade screwdriver to lift the rearview mirror rubber plug ① , hold the mirror rod of the right rearview mirror , and then use a 6 # hexagon socket to remove the bolt ② , and then remove the rearview mirror . Pay attention to the ϕ 8 spring washer ③.

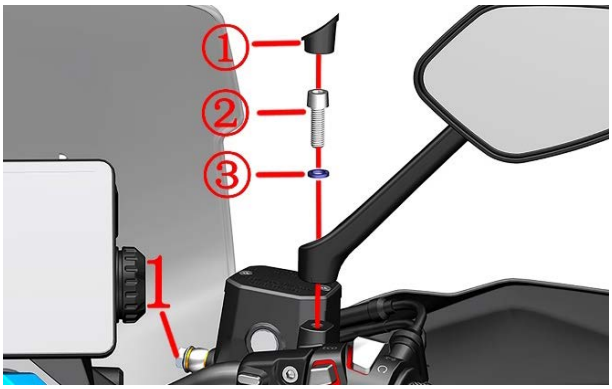

b. Hold the front brake master cylinder firmly and use a 5 # hexagon socket to remove the two bolts (2) and move the right auxiliary switch away.

368G、250G:

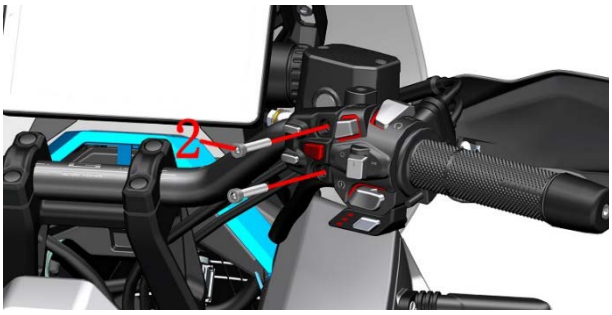

ETC:

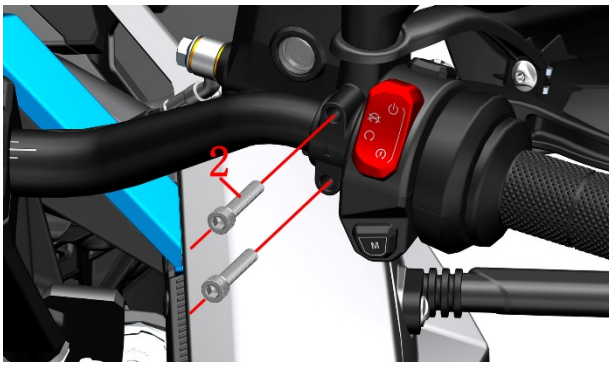

c . Tilt the front brake master cylinder so that the bolt (1) faces upwards , wear waterproof gloves and use a 12 # socket to remove the bolt (1) , remove the copper washer (3) , remove the FMC-HU oil pipe , and pour out the brake fluid in the master cylinder. The standard torque of the bolt (1) is 32 Nm (3.3 kgf.m, 24 lbf.ft).



d . Refer to the steps for adding brake fluid to remove the top cover; refer to the steps for removing the brake switch and brake handle to remove.

e . Disassemble the front disc brake master cylinder

a is the oil window assembly and cannot be disassembled unless necessary ; b is the ϕ0.5 oil hole ; c is the ϕ3 pressure relief oil hole .

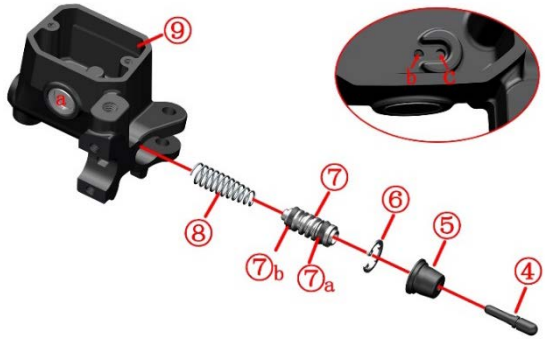

④Piston push rod ⑤Dust cap ⑥ retaining ring ⑦ piston assembly (⑦a outer sealing ring ⑦b inner seal ring) ⑧ spring ⑨ main pump housing

The brake fluid can be cleaned with diesel or kerosene to facilitate the next step of disassembly. If the oil hole is blocked, it can be dredged with a dust gun or a small needle tool . After disassembly, use a soft brush that does not shed hair to clean all parts . It is not recommended to use a dust gun to blow dry. Air compressors with poor drying or filtering effects may blow dust, water vapor or other debris into the main pump housing that has been cleaned through the dust gun ; a vacuum cleaner with high vacuum can be used. A small amount of DOT4 brake fluid can be applied to the piston assembly and spring before assembly . Do not apply other lubricating materials such as lubricating oil, grease or rust-proof oil .

f . Refer to the requirements for lubricating the movable parts of the handle above and apply an appropriate amount of high vacuum silicone grease to the handle bolt and the outer end of the piston assembly. Refer to the disassembly steps to reinstall , and add the newly opened brake fluid and perform the exhaust operation according to the previous steps . Note that the copper gasket (3) needs to be replaced with a new one to prevent leakage . After assembly, confirm that the brake has been restored before driving the vehicle.

Disassemble the rear disc brake master cylinder

rear disc brake master cylinder is mirror-symmetrical to the front disc brake master cylinder and can be disassembled by referring to the steps for disassembling the front disc brake master cylinder .

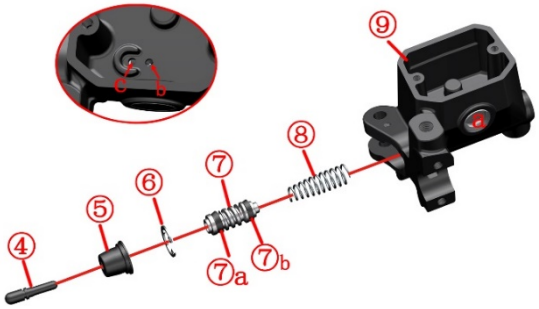

Disassembling the front disc brake caliper

a. First, use 14 # to loosen the oil pipe bolts until there is no leakage. Then use 8# hexagon socket to remove the two M10 ×1.5×60 bolts (red circles). The standard torque of the bolts is 45 ～50N.m (4.6 ～5.1 kgf.m, 33 ～37 lbf.ft). Do not operate the brake handle after removing the caliper .

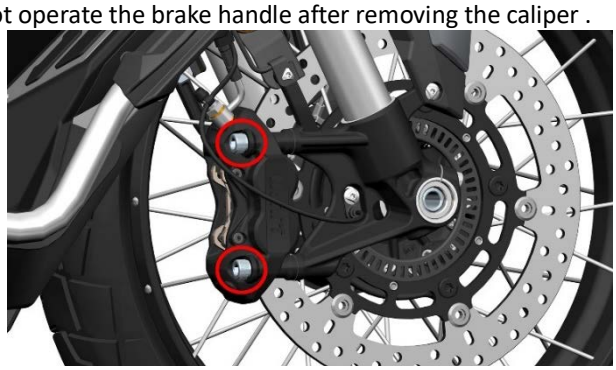

b. Place the oil pan under the front disc brake caliper. First, remove the rubber cap of the screw (1), put on waterproof gloves and use an 8# plum wrench to remove the bolt (2), use a 14# plum wrench to remove the bolt (3), and remove the two copper washers (4).

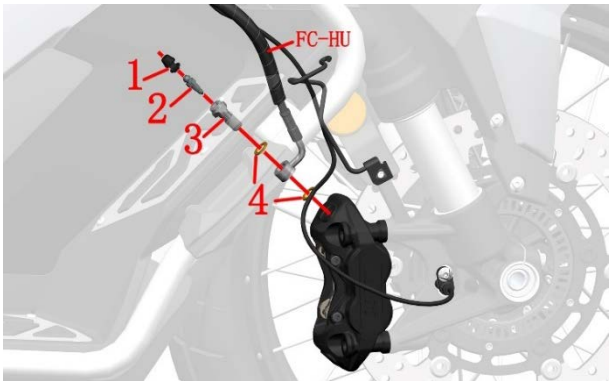

c. Remove the brake pads

d. Disassemble the front disc brake caliper .



1- Bolt 2- Circlip 3- Inner housing of caliper 4- ϕ3 0 oil seal 5- ϕ3 0 dust seal 6- ϕ3 0 piston 7- Brake pad 8- Brake pad spring 9- Outer housing of caliper 10- Pin 11- ϕ3 4 oil seal 12- ϕ3 4 dust seal 13- ϕ3 4 piston

Use a dust gun to blow compressed air from the oil pipe bolt to blow out the piston . Place a towel or other soft material on the piston to prevent the piston from colliding with the caliper mounting plate and causing damage . Keep the dust gun away from the caliper body. If the distance is too close, the piston may suddenly fly out and cause damage . Check the piston and caliper cylinder for scratches, damage , pits, etc. Check the pin for deformation.

Notice:
silicone grease to the two pin surfaces indicated by arrows .
● Oil seals and dust seals should be replaced with new ones after removal . Apply DOT4 brake fluid to the oil seals and pistons before assembly , and apply silicone grease to the outer ring of the dust seals .
● Apply thread lock glue to the threads of the caliper pin, torque: 22 Nm (2.2 kgf.m, 16 lbf.ft).
●Bleed nozzle torque: 7~9N.m (0.7 ~0.9 kgf.m, 5 ~7 lbf.ft).
● The open end of the piston should face the caliper mounting plate and should not be installed upside down.
●If there is slight rust on the piston surface, it can be polished off with 2000 grit fine sandpaper.

e. Refer to the disassembly steps to restore all parts and add new DOT4 brake fluid according to the steps for replacing the front disc brake fluid . The vehicle can be driven only after confirming that the brakes have been restored.

Disassemble the rear disc brake caliper

a. Refer to the section on bolts and nuts of the muffler, and remove the rear section of the muffler.

b. Place the oil pan at the bottom of the caliper, wear waterproof gloves and use a 12# socket to loosen the bolt (1), remove the copper washer (2), and move the RC-HU oil pipe . Refer to the steps for adding brake fluid to the rear disc brake master pump to remove the master pump cover to accelerate the discharge of brake fluid. Standard torque of bolt (1) : 32 Nm (3.3 kgf.m, 24 lbf.ft).

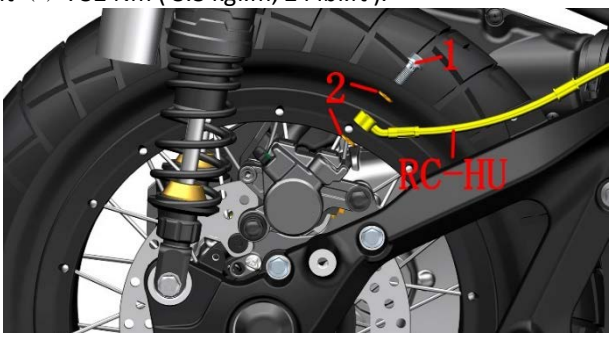

c. For early production models, use a 14# socket; for later production models, use a 10# socket to remove bolt (3). Use a T25 Torx wrench to remove bolt (4) and take out the wheel speed sensor (5). The standard torque for bolt (3) is 24 N.m (2.4 kgf.m, 18 lbf.ft).

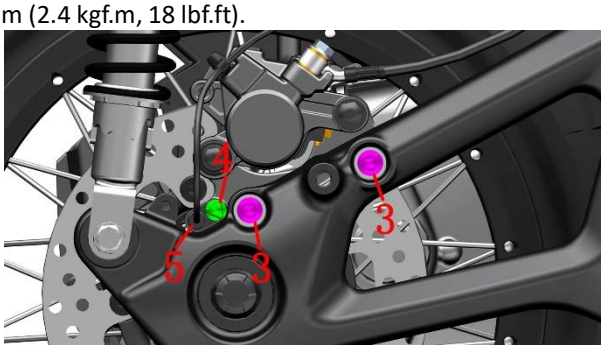

d. Remove the brake pads first.

e. Disassemble the rear disc brake caliper

Refer to the steps for disassembling the front disc brake caliper piston in the previous chapter to disassemble the rear disc brake caliper piston. Check the piston and caliper cylinder for scratches, damage , pits, etc. Check the pin for deformation. The precautions for cleaning and assembly are described in detail above and will not be repeated here.

Notice:
● Apply silicone grease to the surfaces of the pin and bushing indicated by the arrow .
● Oil seals and dust seals should be replaced with new ones after removal . Apply DOT4 brake fluid to the oil seals and pistons before assembly , and apply silicone grease to the outer ring of the dust seals .
● Apply thread lock glue to the caliper pin threads, torque: 27 Nm (2.8 kgf.m, 20 lbf.ft).
●Bleed nozzle torque: 7~9N.m (0.7 ~0.9 kgf.m, 5 ~7 lbf.ft).
● The open end of the piston should face the caliper mounting plate and should not be installed upside down.
●If there is slight rust on the piston surface, it can be polished off with 2000 grit fine sandpaper.

Wheel speed sensor and induction gear ring

Notice:
●The vehicle must be parked on a stable lifting platform or level and flat ground .

Lower the main stand and park the vehicle securely , leaving the rear wheels hanging in the air.

Use a feeler gauge to check whether the clearance between the wheel speed sensor and the ABS sensing gear ring is within 0.4-1.2mm (0.02-0.05in).

If the clearance is not within the specified range , check whether the wheel speed sensor is damaged and whether the ABS sensor ring is loose . For the front wheel, check whether the position where the sensor is installed on the front disc brake caliper mounting plate is deformed, and for the rear wheel, check whether the installation position on the rear swing arm is deformed and whether the rear wheel nut is loose.



Front wheel

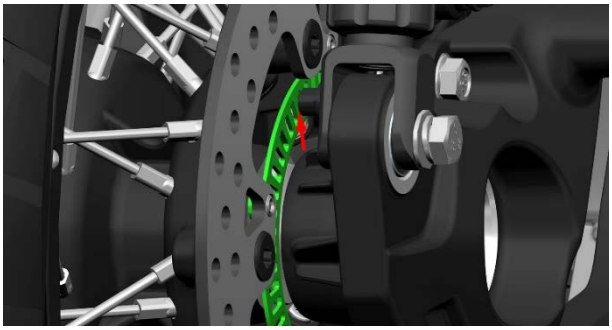

rear wheel

9. Battery /Charging System

Notice before service

1. Discarded batteries must be properly disposed of and should not cause environmental pollution. It is recommended that the discarded batteries be handed over to professional recycling agencies for recycling .
2. It is prohibited to use untested chargers to charge batteries .
3. When reinstalling the battery , when there is a sudden power outage during driving , when the idling speed is abnormal, or when replugging the fuse, the EFI system needs to be reset. The specific method is as follows:
    a. Unlock the vehicle and raise the main stand;
    b. Press the brake and start the vehicle;
    c. Increase the engine speed to over 3000 rpm ;
    d. After releasing the accelerator, turn off the ignition switch and lock the vehicle;
    e. Wait for 5 seconds and then unlock the vehicle again to reset the EFI system.
4. Before removing the battery , the vehicle must be powered off.
5. Before troubleshooting the charging system, check whether the battery is used and maintained normally. Check with the owner whether the owner often uses high-power electrical appliances, does not drive the motorcycle for a long time, or turns on the lights for a long time without starting the vehicle .
6. If there is a “  ” symbol on the right side of the step , you can click it to quickly jump to the corresponding step.



●When the engine cannot be started , do not press the electric start button frequently. Frequent operation may cause overheating or damage of the starter motor, flooding of the cylinder, battery failure , etc.
●When the vehicle is powered on , connecting or unplugging the plug may cause damage to some electrical components.
●Overcharging or undercharging, or discharging for a long time may cause battery damage.

Troubleshooting

Battery damage or degradation troubleshooting process

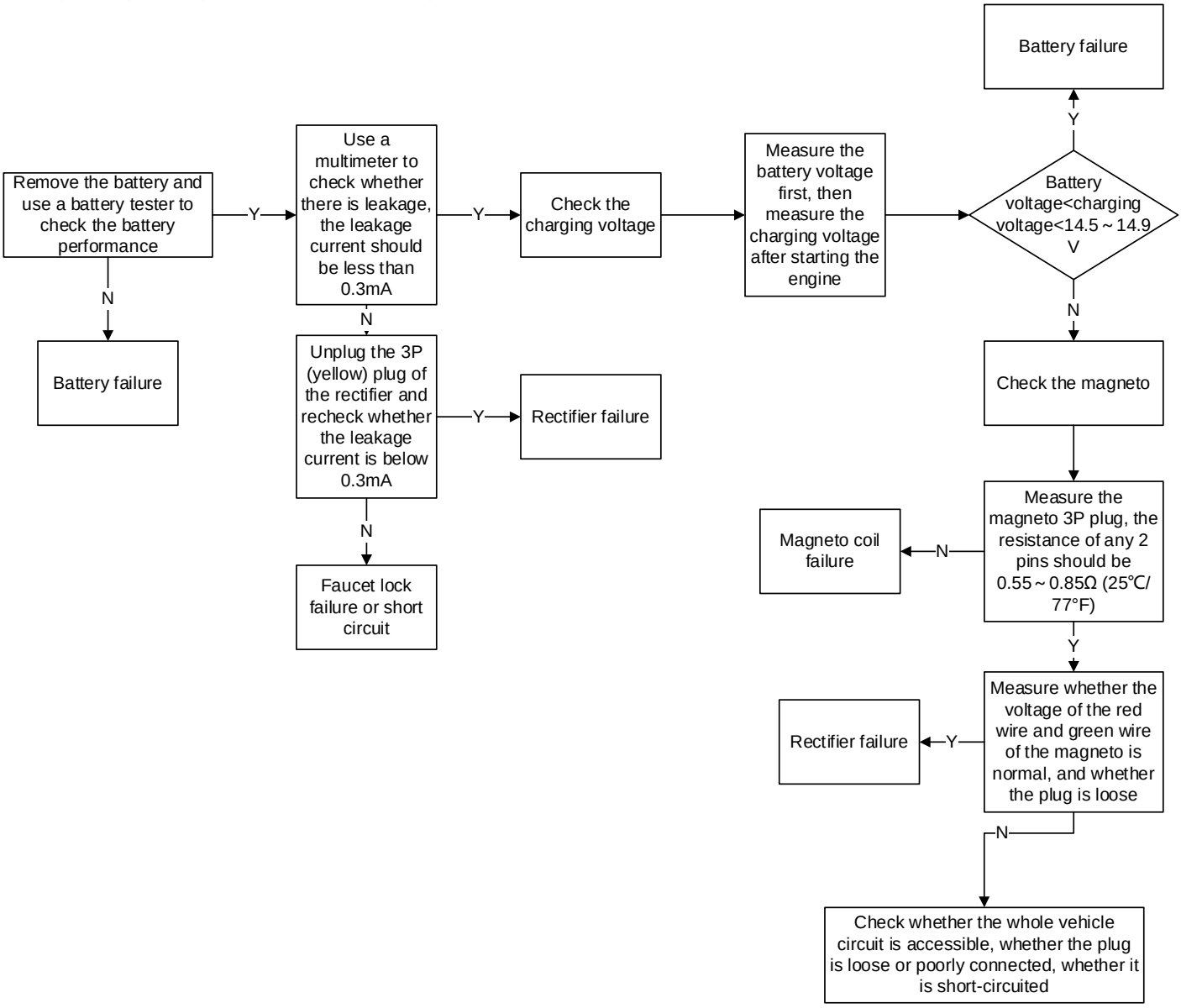

Charging system layout

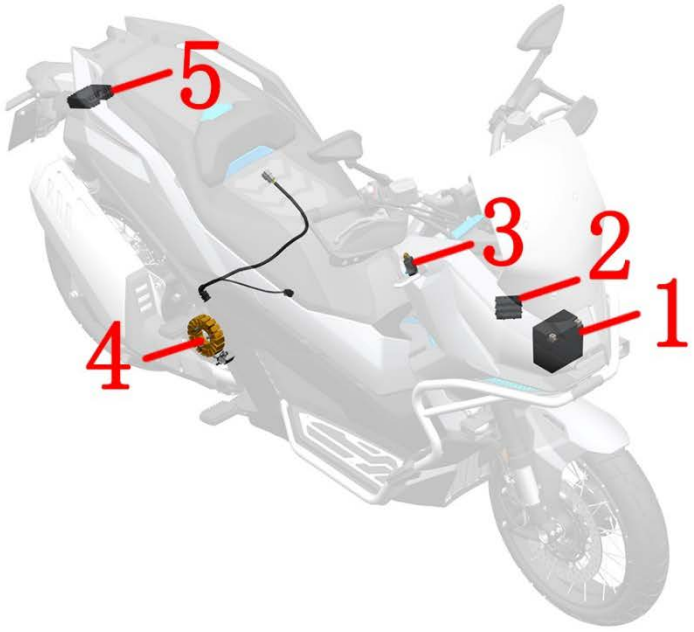

1-Battery 2-Main fuse (25A) 3-Charging port (PKE) 4 - Magneto 5 – Rectifier

Electrical Schematic

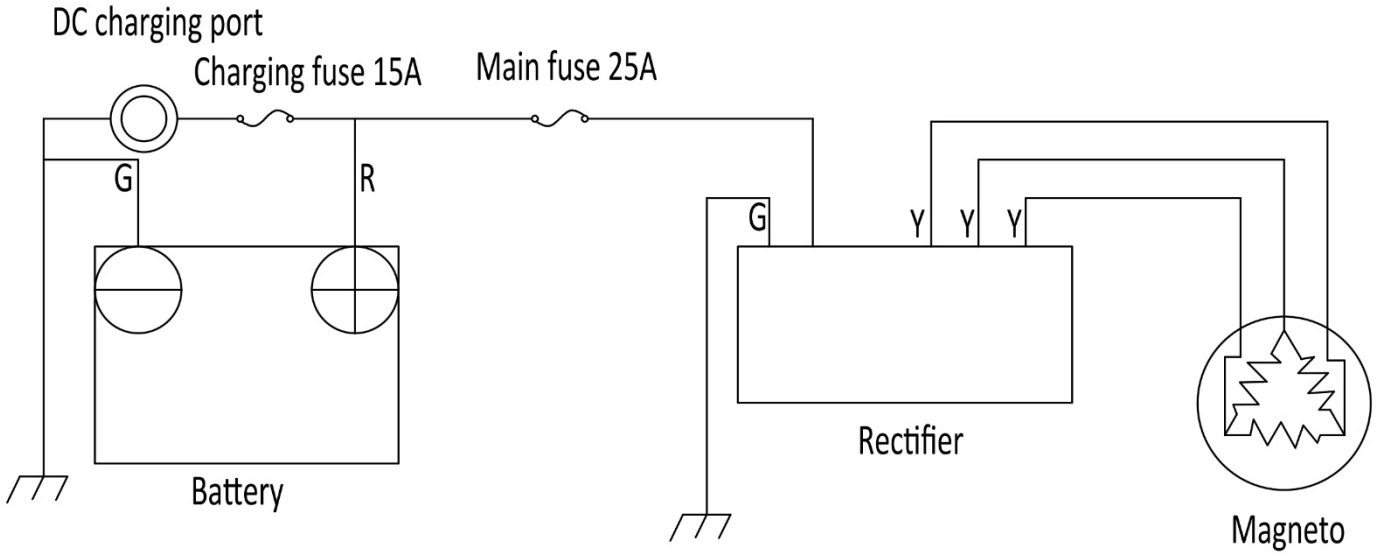

letter	G	R	Y
Chinese	green	red	yellow
English	Green	Red	Yellow

Battery disassembly and assembly

1. Disassembly

Notice:

●The entire vehicle must be powered off before removing the battery .

●The negative pole must be removed first , then the positive pole. The opposite is true during installation .

●The positive and negative electrode protection caps must be properly covered when reinstalling .

●After removing the battery, you need to reset the instrument time and the EFI system.

2. Inspection

Refer to the head cover removal method and remove the upper part of the hood .



Voltage	Full power voltage	13.3V
	Charging voltage required when not installed	≤ 12.8V
	voltage required for loading	≤ 12.5V

Notice:

●The battery that has just been charged needs to be left for about 30 minutes before measurement. The voltage of the battery that has just been charged will fluctuate .

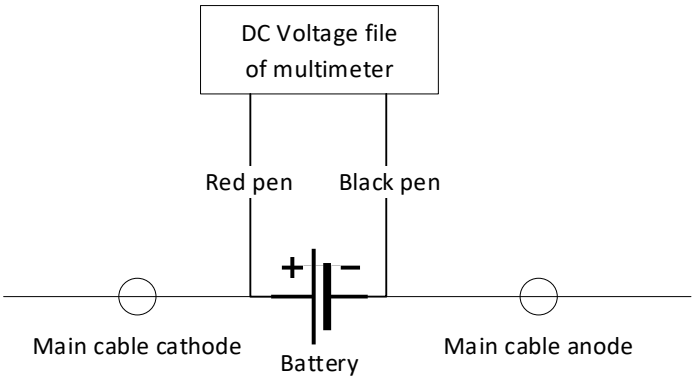

3. Charging

If the battery fails to start due to insufficient power , you can use the charger provided with the vehicle to charge it. Open the right storage box cover and remove the cover to see the DC charging port of the PKE .



Charging system inspection

1. Leakage test

a. Turn off the vehicle and disconnect the negative battery cable .

b. Set the multimeter to the current range. Connect the black test lead to the negative terminal of the battery, and the red test lead to the removed negative wire. Note that you should first adjust the current to a high level, and then gradually reduce it to a suitable level .

c. Measure the leakage current to see if it is below 0.3mA . If it exceeds the standard value , check if the circuit is short-circuited.

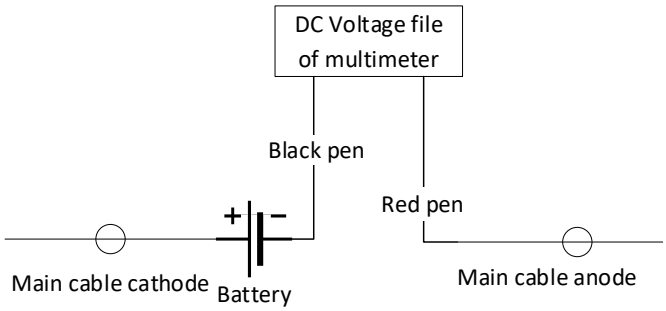

2. Check the charging voltage

Notice:

● Make sure the battery is in good condition before testing .

● The battery or any electrical components cannot be disconnected before the vehicle is powered off .

a. Preheat the engine to normal operating temperature and then turn off the engine.

b. Connect the red probe of the multimeter to the positive pole of the battery and the black probe to the negative pole. Adjust the multimeter to the 20V DC voltage position . Turn on the high beam of the headlight and start the engine . Measure the charging voltage when the engine speed is 5000 rpm.

standard :

Battery voltage < charging voltage < 15V

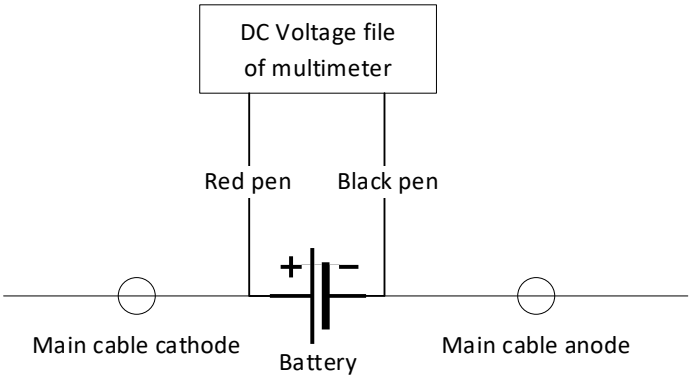

3. Inspection of magneto stator charging coil

the steps of "Replacing the rear shock absorber" to remove the rear tail group and taillight, find the 3P plug of the yellow wire of the rectifier on the frame tube on the left side of the rear part of the frame and unplug it.

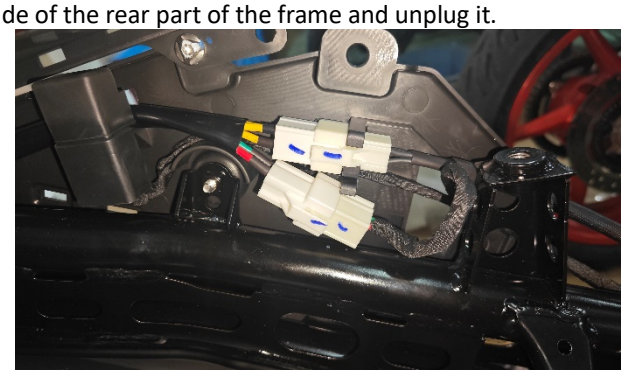

b. Check whether the plug is loose or corroded.

c. Use the resistance range of a multimeter to measure the resistance of any two wires of the black 3P plug . The standard resistance is 0.55~0.85 Ω (25℃/77°F).



d. After unplugging the 3P plug of the yellow wire, use a multimeter to measure the red positive wire and the green negative wire. The battery voltage should be measured. Use the beep mode of the multimeter to check whether the green negative wire and the ground wire (the ground wire can be found at any stud directly connected to the frame) are always conducting .

10. Front fork assembly

Notice before service

1. Use high-quality tools or special tools and fixtures designed by our company. Using inferior tools may cause damage to parts, coating shedding, inadequate assembly , etc.
2. O-rings , paper gaskets , copper gaskets, component sealing rings, etc. used for sealing must be replaced before assembly .
3. For fasteners with torque requirements, a torque wrench should be used to check the torque; for those without torque requirements, refer to the general torque values recommended for general fasteners .
4. Clean before assembly ; check whether the assembly is correct and in place after assembly.
5. The vehicle should be parked in a balanced position and attention should be paid to safety during disassembly and assembly, including but not limited to the use of electric tools , hand tools, pneumatic tools, hydraulic tools, and handling ; avoid contact with skin, eyes, burns, etc.
6. All types of replaced oils, liquids , batteries , etc. must be collected and handed over to qualified institutions for disposal; it is prohibited to dump them at will to pollute the environment or water sources.
7. Swallowing or inhaling coolant , brake fluid, etc. will cause certain harm to the human body. Wash hands, face and any exposed skin thoroughly after each addition. If swallowed by mistake, contact the poison control center or hospital immediately; if inhaled, go to a ventilated environment immediately. If accidentally splashed into the eyes, rinse the eyes immediately with plenty of running water and seek medical attention or treatment in time. Keep away from children and pets.
8. When replacing the front wheel , a jack or similar device is required to support the entire vehicle.
9. Contaminated disc brake discs and disc brake pads will reduce the braking effect. Please replace new disc brake pads and clean contaminated brake discs.
10. When the front wheel is removed , please do not operate the brake handle .
11. After the front wheel is installed , press the brake handle repeatedly until the brakes regain their braking effect.
12. If there is a “  ” symbol on the right side of the step , you can click it to quickly jump to the corresponding step.

the things that need to be paid attention to and the basic requirements for preventing accidental injuries ; it is impossible to list all situations in detail . Be sure to stay vigilant during the disassembly and assembly process to prevent accidents.

Exploded view of the front fork assembly :

Exploded view of the steering wheel

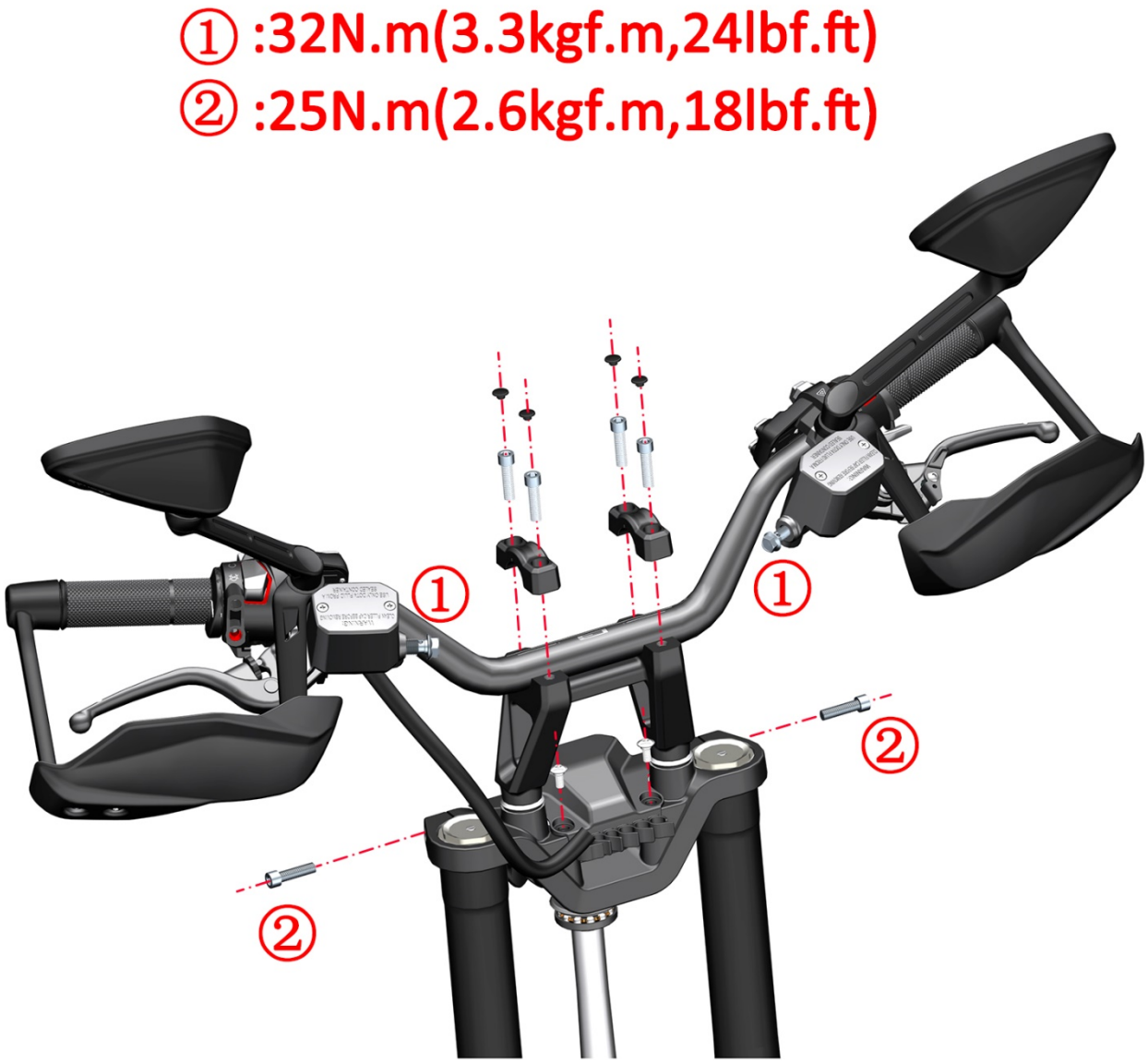

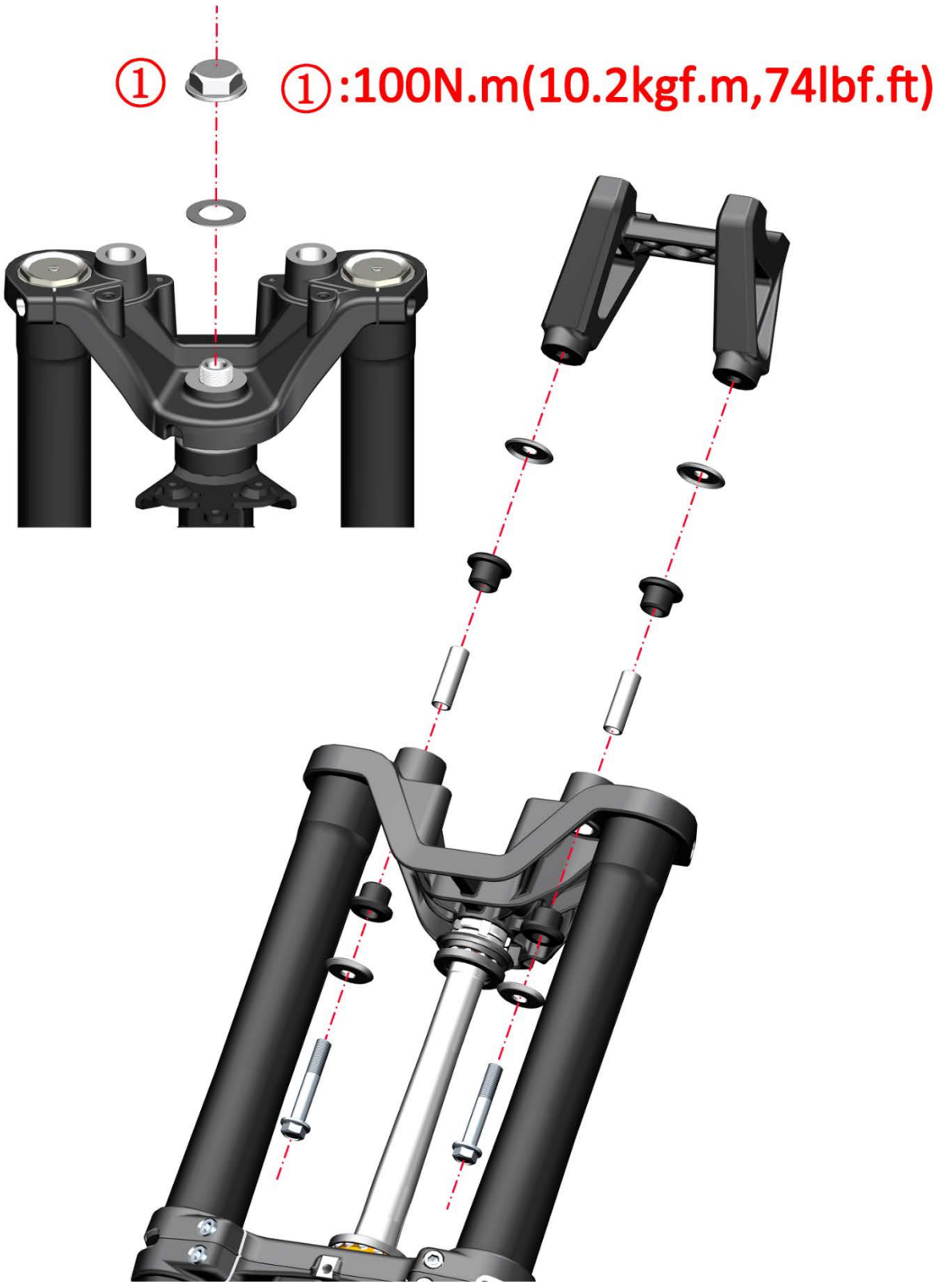
①
①:100N.m(10.2kgf.m,74lbf.ft)

Front fork exploded view

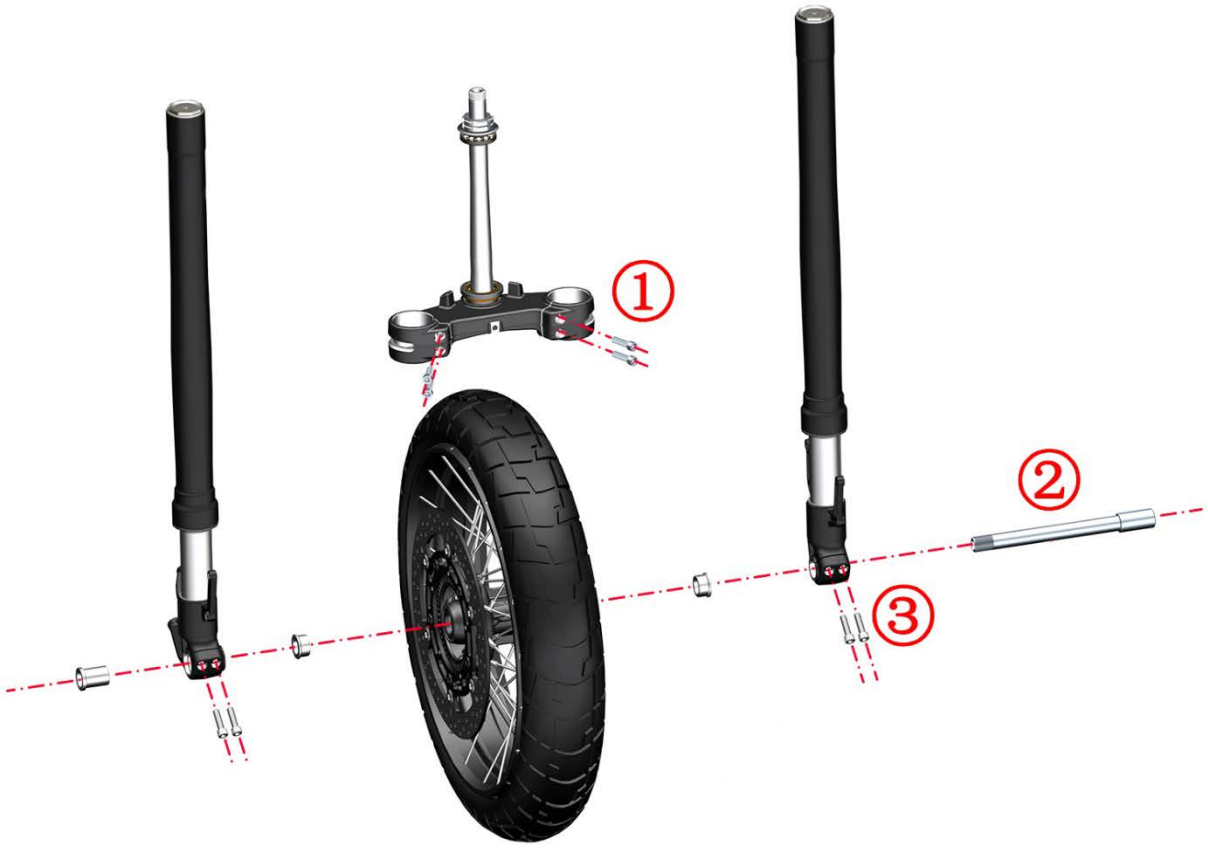



①:25N.m(2.6kgf.m,18lbf.ft)
②:50N.m(5.1kgf.m,37lbf.ft)
③:20N.m(2kgf.m,15lbf.ft)
④:45-50N.m
(4.6-5.1kgf.m,33-37lbf.ft)

Lower connection board exploded view

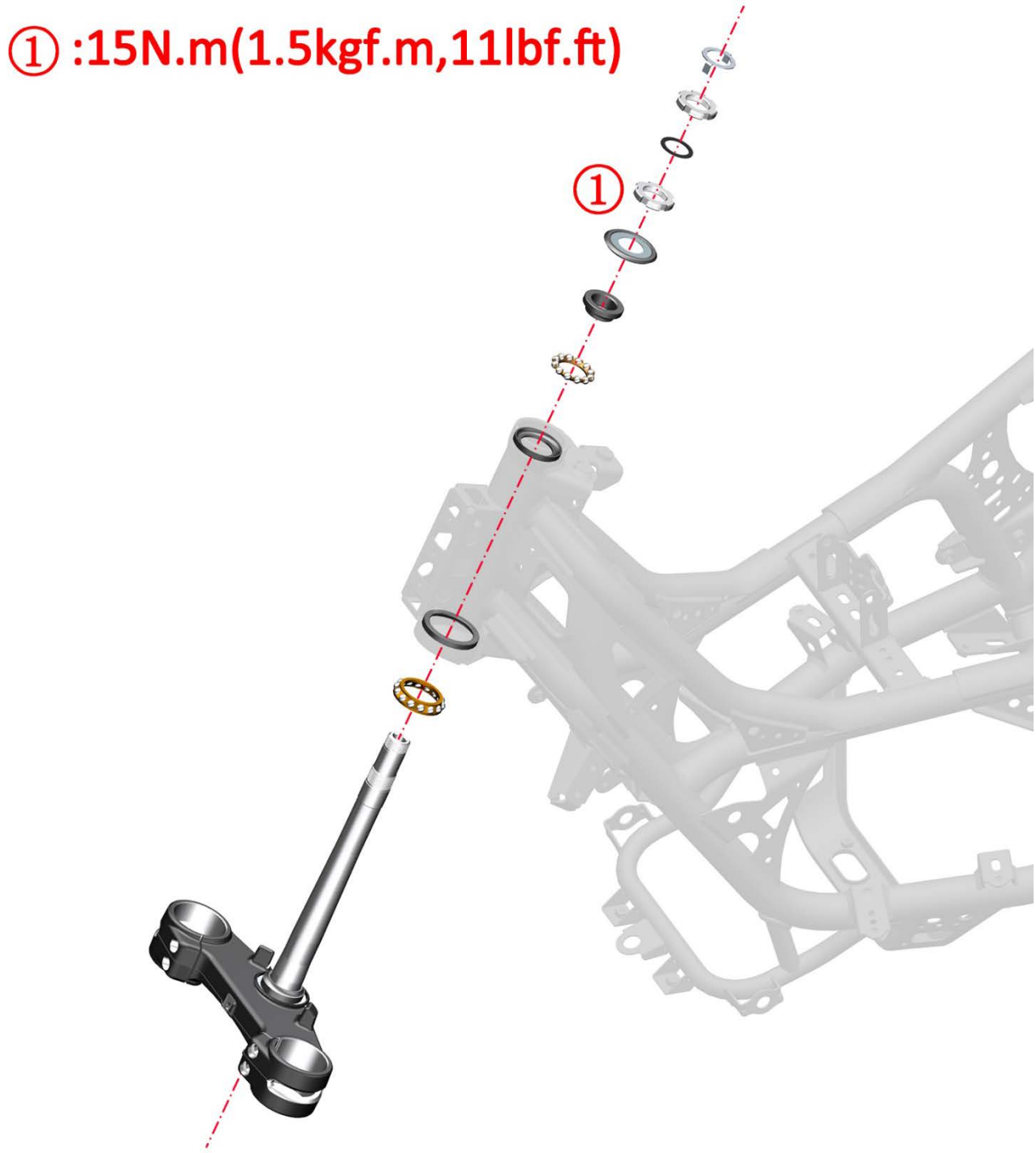

Replace the steering wheel

Notice:

● When removing the disc brake oil cup , be sure to point it vertically upwards to prevent air from entering the brake line.

● When disassembling or assembling the handle switch , pay attention to adjusting the internal wiring harness of the switch to avoid the wire sheath being damaged by the housing or bolt column.

1. Disassemble the handlebar assembly

a . Remove the four decorative buckles (3), use a 6 # hexagon socket to remove the four bolts (2), and remove the two clamps (6). Use a 5# hexagon socket to remove the four bolts (4), and remove the left and right auxiliary handle switches (1) and (5).

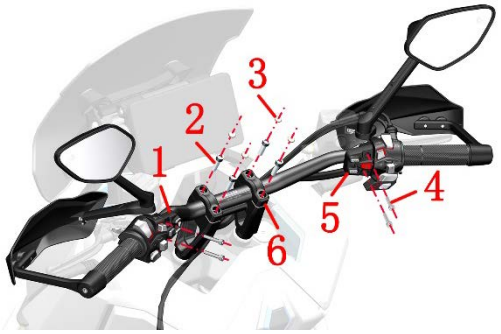

b . Use a T25 hexagon socket wrench to remove the M6×16 bolts (7) from the left handlebar guard (10) and the right handlebar guard (9).

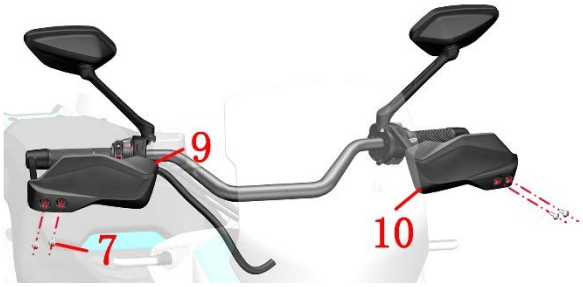

c. Use a 2.5# hexagon socket tool to remove the fixing bolt a below the left handle rubber sleeve (13), and use a 5 # hexagon socket tool to remove the left and right bolts (11), and remove the hand guard (12), the left handle rubber sleeve (13), and the right handle rubber sleeve (14).

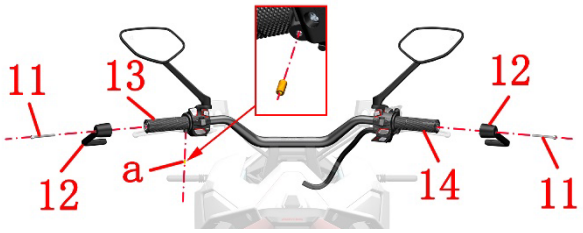

d. Remove bolts (16) with a cross screwdriver, remove the two bolts b on the left-hand switch (15) with a 5# hexagon socket , separate the upper and lower parts of the left-hand switch (15) , and remove the left-hand switch (15). Remove bolts (20) with a cross screwdriver, and remove the heating switch (19). Remove bolts c and bolts d on the right-hand switch (18) with a 5# hexagon socket , separate the upper and lower parts of the right-hand switch (18), and remove the left-hand switch (18). Remove the direction handle (17).



2. Install the direction handle assembly

a. Stick 4 rubber strips on the inner wall of the left heated handlebar , and then install the left heated handlebar into the left handlebar ; the inner wall of the right heated handlebar does not need to be glued with rubber strips, and can be directly installed . Note that there are positioning holes on the rubber sleeve of the left handlebar , which need to be aligned with the hole position a of the handlebar, and then tighten the fixing bolt (1) with a 2.5 # hexagonal tool. Do not remove the throttle cable on the rubber sleeve of the right handlebar. Reinstall the left and right hand guards according to the disassembly steps , and tighten the M6× 60 bolts with a 5# hexagonal tool .

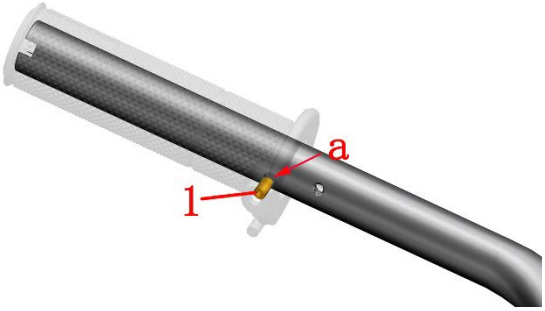

b . When installing the left-hand switch, align the cross head bolt (2) with the positioning hole ① on the handlebar and the direction handle, and then tighten it with a cross screwdriver . Align the upper and lower parts of the left-hand switch, and use a 5 # hexagon socket to tighten the two bolts that come with the left-hand switch .

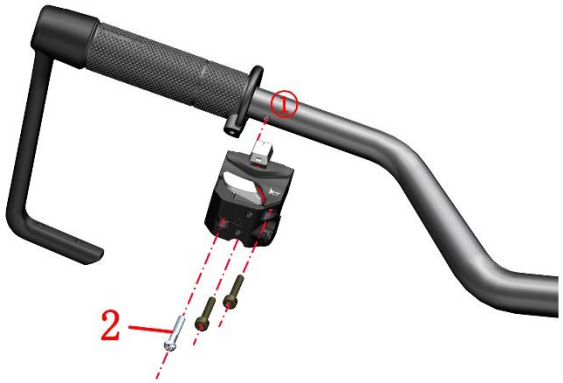

c. When installing the right-hand switch, align the cross-head bolts (3) with the positioning holes ② on the handlebar switch and the direction handle, and then pre-tighten them with a cross-head screwdriver . Align the upper and lower parts of the right-hand switch and combine them, and use a 5 # hexagon socket to tighten the two bolts that come with the right-hand switch . Remove the pre-tightened

bolts (3), align the hole position of the heating switch (4) with the positioning holes ② on the handlebar switch and the direction handle, and then tighten the bolts (3).



d. When installing the auxiliary handlebar switch , align the joint surface of the auxiliary handlebar switch and the disc brake master cylinder with the triangle mark on the handlebar switch , and then use 5 # hexagon socket to tighten the four M6×30 bolts .

Replacement of Handlebar（ETC）

Cautions:

●The disc brake fluid reservoir must be kept vertically upright when removed to prevent air from entering the brake line.

●When installing or disassembling handlebar switches, adjust the internal wiring harness to avoid pinching or damaging the wire insulation by the housing or bolt posts.

1、Disassembly of Handlebar Assembly

a.Use a T25 Torx socket to remove the left and right M6×16 bolts (11) (2 on each side) securing the left handlebar cover (10) and right handlebar cover (9).

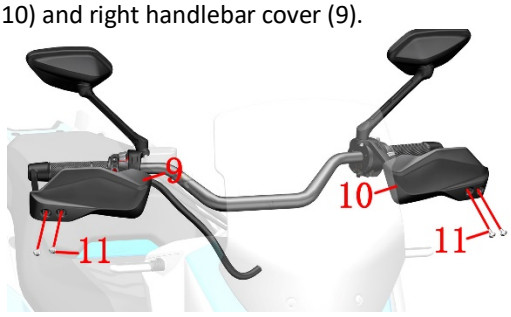

b.Carefully pry out the 4 decorative fasteners (1) using a suitable tool.

Use a 6# hex wrench to remove the 4 bolts (2) and take out the 2 clamping plates (3).

Use an 8# socket to remove the 4 bolts (4) and detach the two clutch lever half-covers (7).

Use a 5# hex wrench to remove the bolts (7) securing the left and right handguard brackets, then detach the left and right brake master cylinders ⑸⑹.(For precautions on brake master cylinder removal, please refer to the Brake System chapter.)

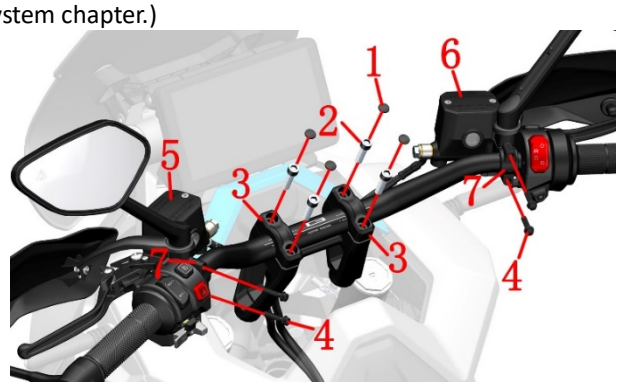

c. Use a 5# hex wrench to remove the bolts (8) fixing the left and right handguard brackets.

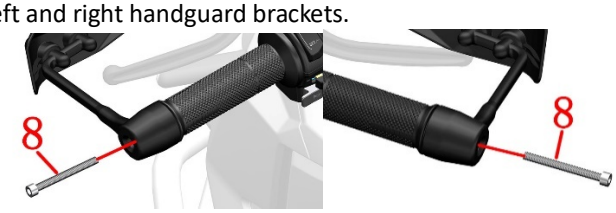

d.Use a Phillips screwdriver to remove 1 screw (12) and 3 screws (14).

Disconnect the handlebar switch wiring harness and remove the left handlebar switch.

Gently shift the left handlebar grip to expose bolt (13), then remove it with a Phillips screwdriver. Take care not to lose the spring washer (16).

Disconnect the wiring harness and remove the left handlebar grip (see right figure).

Use a Phillips screwdriver to remove bolt (15), then detach the lower part of the right handlebar switch and the right handlebar grip.

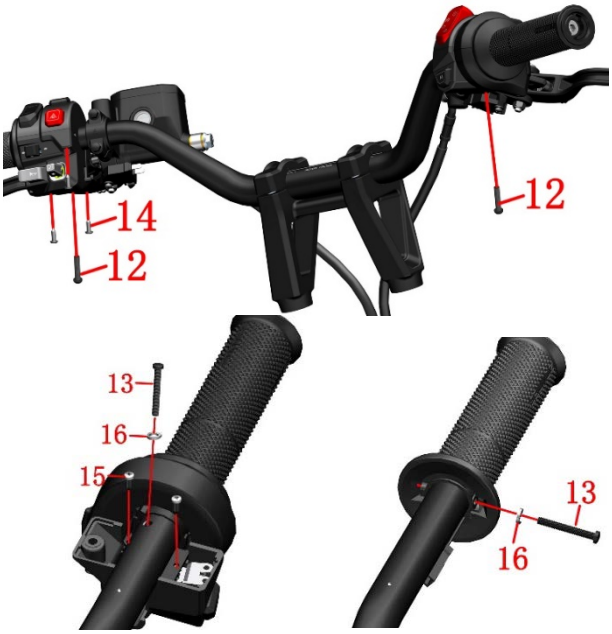

2、Installation of Handlebar Assembly

a.Install the left handlebar grip onto the handlebar by following the removal steps in reverse order.



b.When installing the left handlebar switch:

Align the positioning pin on the Phillips head bolt (12) with the corresponding locating holes on both the switch assembly and the handlebar, then tighten it with a Phillips screwdriver.

Correctly mate the upper and lower halves of the left handlebar switch.

Use a Phillips screwdriver to secure the assembly by tightening its 3 built-in screws (14).

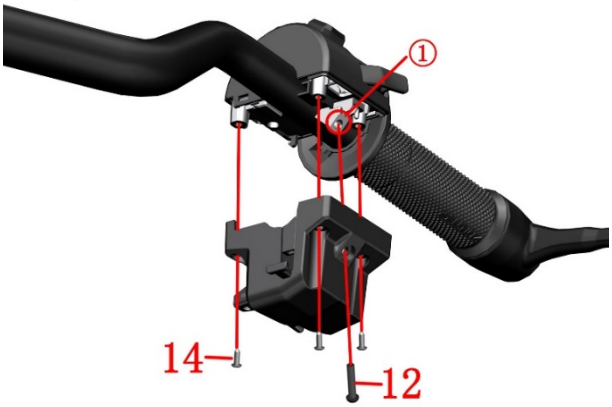

c.Use a Phillips screwdriver to install the positioning bolt (13) back into the handlebar.

Reinstall the lower part of the right handlebar switch.

Secure the right handlebar grip and the lower switch

section using bolt (15).

Align and close the upper half of the right switch, then secure both halves of the right handlebar switch using bolt (12).



368G、250G:

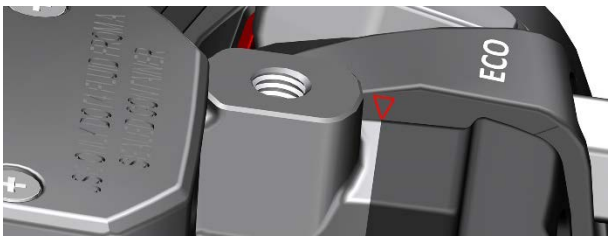

ETC:



e . Place the handlebar on the pad, and use bolts and pressure blocks to pre-fix the handlebar on the pad. It is necessary to leave adjustment positions for the handlebar, and there is no need to tighten the bolts for the time being. As shown in Figures ③ and ④, place the handlebar according to the scale position until it coincides with the positioning point of the pressure block, and then use a 6 # hexagonal tool to tighten the four bolts.



WARNING

●After installation, check whether the throttle cable is properly assembled and whether it can return to its original position flexibly.

●Self-tapping screws must be installed vertically and the torque should not be too large.

●After installation, check the switch buttons of the left and right handlebar switches and the left and right auxiliary handlebar switches to check whether they can be used normally and whether there is any wire pressure.

Replace the front wheel

Notice:

● Be careful not to damage the ABS coil during disassembly . wheel is removed, do not press the brake handle .

● The vehicle must be parked on a flat, stable ground or a lift.

●Do not use a high-pressure water gun to flush the oil seal at close range.

1. Disassemble the front wheel assembly

a . Lower the main support, and then use a jack or a suitable device to support the vehicle so that the front wheels are off the ground.

b. Use a 6 # hexagon socket to loosen the two M8×30 bolts (1) at the front left shoc k absorber , then use a 17 # hexagon socket to remove the front wheel shaft (2), and remove the front wheel and two bushings. 45 ~ 50N.m (4.6 ~ 5.1 kgf.m, 33 ~ 37 lbf.ft)

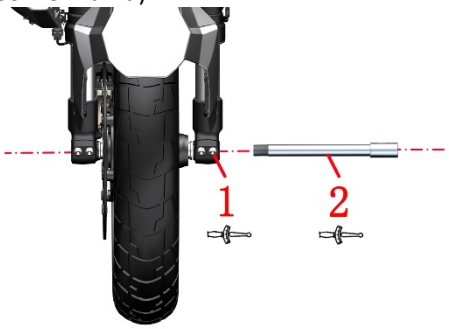

2. Install the front wheel assembly

a. Use a flat-blade screwdriver to separate the two brake pads in the brake caliper. If the resistance is too great and the two brake pads cannot be separated , refer to the method in " Adding Brake Fluid " to remove the upper cover of the disc brake oil cup and then separate the two brake pads .

b. Put the front wheel into the middle of the front shock absorber, shake the front wheel left and right to make the disc brake disc fit into the middle of the brake pad, align it with the shaft hole, insert the front wheel shaft (2) , tighten the front wheel shaft with a 17 # hexagon socket , torque: 50N.m (5.1 kgf.m, 37 lbf.ft). After the front wheel shaft is tightened , there is still a gap of about 2.0mm between the left bushing of the front wheel and the shock absorber ; tighten the two M8×35 bolts (1) at the front left shock absorber with a 6 # hexagon socket , torque : 20 Nm (2.0 kgf.m, 15 lbf.ft) .

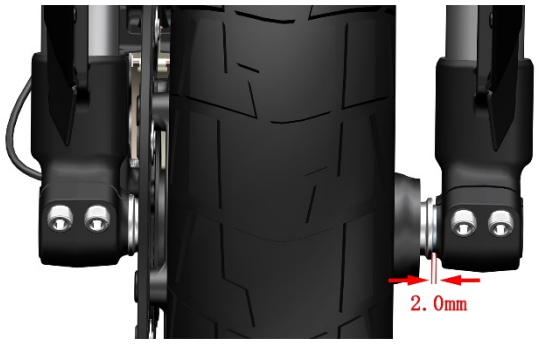

DANGER

● After the front wheel is installed , press the brake handle repeatedly until the brakes regain their braking effect.
●Contaminated disc brake discs and disc brake pads will reduce the braking effect. Please replace new disc brake pads and clean contaminated brake discs.

WARNING

●Every time you replace the front wheel , you must go to a professional organization for a dynamic balance test.
● Tire self-filling fluid may block the air holes of the tire pressure monitoring sensor, causing difficulty in inflation or tire pressure monitoring failure, so it should not be used.

Exploded view of the front wheel assembly **:**

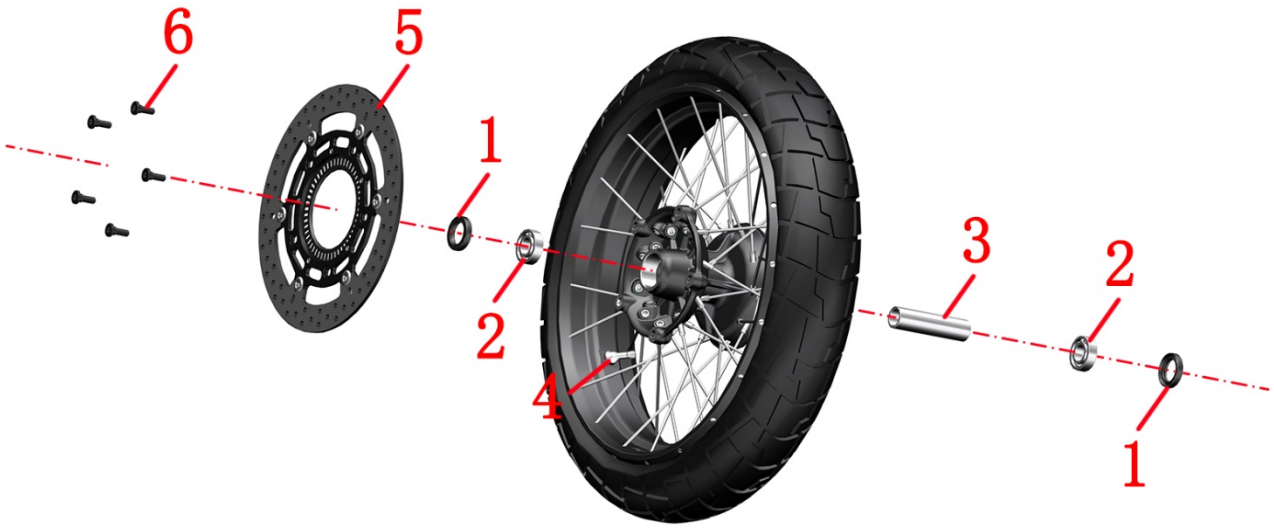

Serial number	name	QTY	Remark
1	Oil seal TC ϕ28×ϕ42×7	2	
2	GB276 deep groove ball bearing 6004-2RS-C3	2	ϕ2 0 × ϕ42 × 12
3	Spacer	1	
4	Tire pressure sensor	1	Pay attention to the direction when installing; the elbow should face left
5	300×5.0 brake disc	1	
6	Non-standard plum bolt M 8 × 2 5	5	2 5 N. m (2.5 kgf.m , 1 8 lbf.ft) . T45 hexagon socket wrench

Front wheel assembly inspection and maintenance :

Note: ●This inspection should be completed by a qualified maintenance unit .

● Do not press the brake handle after the front wheel is removed

● Be careful not to damage the ABS coil during disassembly .

● The vehicle must be parked on a flat and stable surface or on a lift platform.

●Do not use a high-pressure water gun to flush the oil seal at close range.

1. Disc brake

1.1 Service life of disc brakes

Generally speaking, the brake disc replacement mileage is about 40,000 kilometers. The replacement mileage is not absolute . It needs to be determined based on factors such as the owner 's driving habits (whether he likes to brake suddenly) , road conditions, and maintenance cycles. However, if any of the following three situations is reached, the brake disc must be replaced.

a. Use a vernier caliper to measure the disc brake rotor thickness to less than 4.5 mm (0.18 in) .

b. Suspend the front wheel in the air and observe from the front that the disc brake disc swings when the front wheel rotates , and deformation of the disc brake disc is detected .

c . Touch the surface of the disc brake disc with your hand to check for obvious pits , deep scratches or grooves .

1.2 How to replace the disc brake

a. Refer to " Replacing the Front Wheel" to remove the front wheel assembly .

b. Use a T45 hexagon wrench to remove the five M8×25 bolts and remove the damaged disc brake.

c. After reinstalling the new disc brake disc, use a T45 hexagonal wrench. Torque : 25N.m (2.5 kgf.m, 18 lbf.ft).

d.Reinstall the front wheel assembly.

2. Front wheel oil seal and bearing

2.1 Service life of front wheel oil seal and bearing

Generally , the bearings and oil seals in the front wheel axle need to be checked every 50,000 kilometers, but the bearings and oil seals in the front wheel axle need to be checked according to the actual conditions of the vehicle , such as the driving conditions and load size. For example , after the vehicle wades through water , water will enter the oil seals and bearings , and the fine dust in the water will accelerate the wear between the bearings and the oil seals . At the same time, the water and grease will become an emulsion after friction and lose their original lubrication effect. This also shortens the service life of the oil seals and bearings . When the following situations occur , the front wheel oil seals and bearings should be checked in advance .

a . Abnormal noise from the front wheel occurs while riding .

b. When the handlebars shake left and right while riding .

2.2 How to replace the front wheel oil seal and bearing

a. Refer to " Replacing the Front Wheel" to remove the front wheel assembly .

b. Use a flathead screwdriver to lift out the oil seals on both sides of the front wheel , check if the oil seals are damaged or deformed , and check if the outer ring of the bearing fits tightly against the rim. If there is no abnormality, turn the inner ring of the bearing by hand to check if the bearing rotates smoothly . If there is any sticking or abnormal noise, replace the front wheel bearing and oil seal.

c. Replacement of the front wheel oil seal and bearing must be performed by a professional maintenance unit.

d. If there are no problems after inspection, apply a proper amount of butter on the front wheel bearing , and then use an iron rod of appropriate size and a rubber hammer to press the oil seal to its original position.

e.Reinstall the front wheel assembly.

3. Front wheel rim and tire

3.1 Service life of front wheel rim and tire

Generally speaking, there is no limit on the service life and mileage of rims , but the rims must be replaced if the following situations occur .

a. The rim is deformed or warped .

b. The rim is cracked or broken

normal circumstances , the front tire can be used for about 20,000 kilometers . Normal circumstances refer to the normal driving road conditions are not bad , there is no puncture and other phenomena. Because the tire is made of rubber, it will age. Generally, it is necessary to replace the tire after about 4 years . If you do not replace it , you need to check it frequently to check the aging of the tire and whether there are cracks in the tire . If the following situations occur , the tire must be replaced.

a . The tire has been repaired multiple times .

b. When the tire tread wear reaches the designed limit .

c. The tire has multiple signs of aging and cracking.

3.2 How to replace the front wheel rim and tire

a . Refer to " Replacing the Front Wheel" to remove the front wheel assembly.

b . Take the removed front wheel assembly to a professional organization and use a tire remover to remove the tire.

c. Use a lifting machine to install the new rim or new tire. And inflate the front tire to the standard value . Front tire pressure : 2 30 kPa (33.4 psi)

d. Install the assembled front wheel assembly back onto the vehicle.

3.3 Dynamic balancing

The wheel is a whole composed of a tire and a rim . Due to manufacturing reasons , the mass distribution of each part of the wheel may not be very uniform . When the wheel rotates at high speed, a dynamic imbalance state will be formed, causing the wheel to shake and the steering handle to shake while the vehicle is driving . In order to avoid this phenomenon or eliminate it, the wheel must be adjusted to balance the edge parts by adding counterweights under dynamic conditions . This correction process is what we call

dynamic balancing.

beads on the wheels can ensure that the wheels rotate more smoothly , reduce vibration and shaking, improve the stability and comfort of the vehicle, and facilitate safe driving.

a. Every time you replace the front and rear wheels, please go to a professional qualified institution to check the dynamic balance.

b. The dynamic balancing weight must be attached to the designated plane of the rim (red area) .

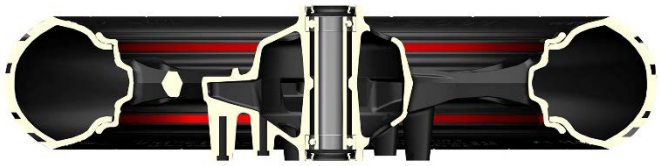

Replace the front shock absorber

Notice:

wheel is removed, do not press the brake handle .

● Be careful not to damage the ABS coil during disassembly .

● When removing or installing the front fender , be careful not to scratch the shock absorber or the front fender .

● When removing the shock absorber, first remove the two bolts that fix the same shock absorber , then remove one side of the shock absorber and then remove the other side.

1. Remove the front wheel and front fender assembly

a . Refer to "Replacing the Front Wheel " to remove the front wheel .

b . Use a 10 # socket to remove an M6× 20 bolt (2) and take out the pipe clamp. Use a T45 hexagonal wrench to remove two M6× 14 shoulder bolts . Use an 8# hexagonal wrench to remove two M10×1.5×60 bolts (4) and remove the front brake caliper from the front shock absorber bottom tube . Use a T45 hexagonal wrench to remove an M6× 16 bolt (3).

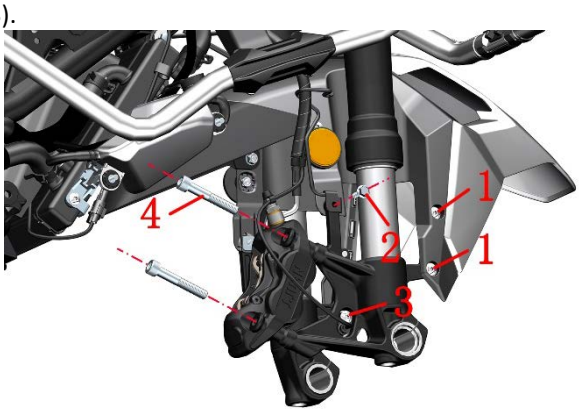

c. Use a T45 hexagon wrench to remove the two M6× 14 shoulder bolts . Use a 10 # socket to remove the M6× 20 bolt (2) .

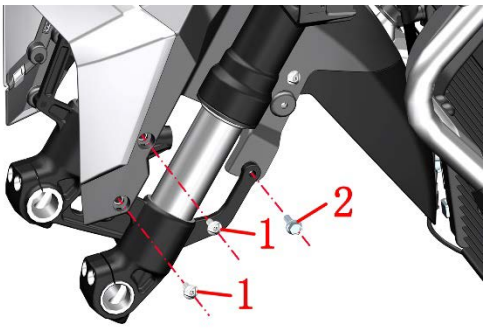

d. Remove the two side reversers (5), press the two sides of the front mud plate according to the small arrows, press the protrusions at the arrows of the front mud plate inwards, move the front mud plate upwards to the appropriate position and pull it out in the direction of the large arrow.

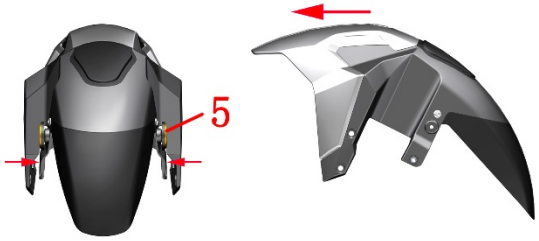

2. Remove the left and right front shock absorbers

a. Turn the handlebar to the far left and use a 6# hexagon socket to remove the M8×30 bolt (6) . Use the same method to turn the handlebar to the far right and remove the bolt (6). Use a flathead screwdriver to pry open the gap on the upper connecting plate .

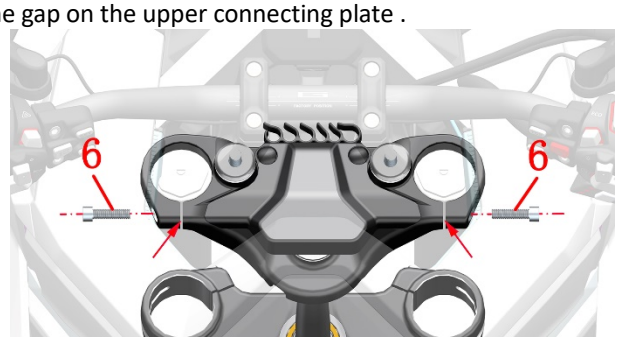

b . Use a 6# hexagon socket to remove the four M8 ×30 bolts (6), use a flathead screwdriver to pry open the gap on the lower connecting plate , and remove the left front shock absorber and the right front shock absorber.

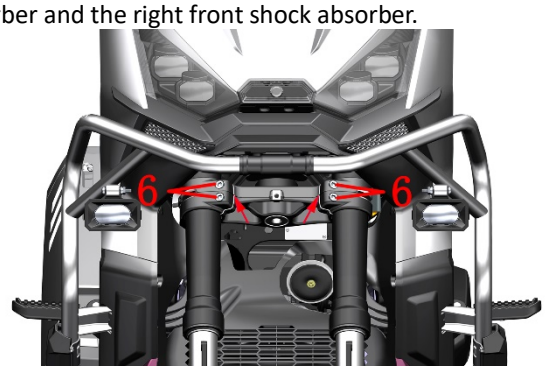

3. Reinstall the shock absorber, front fender, front wheel and other components

a . Use a flat-blade screwdriver to pry open a gap on the lower connecting plate and insert the corresponding shock

absorber .

b. Use a flat-blade screwdriver to pry open a gap on the upper connecting plate , insert the corresponding shock absorber, and make sure that the upper end of the shock absorber is flush with the upper end of the upper connecting plate. After the shock absorber is installed in place, remove the flat-blade screwdriver . Screw in the M8×30 bolt and tighten it with a 6# hexagon socket . Torque: 25N.m (2.6 kgf.m , 18 lbf.ft).

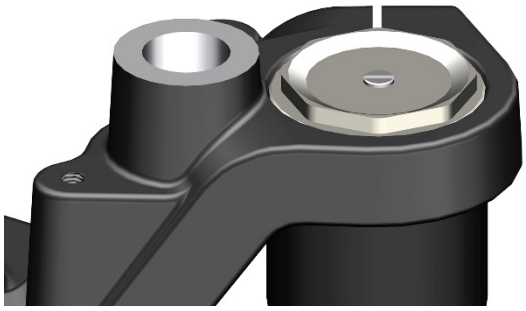

c. Install the two M8×30 bolts on the lower connecting plate , and use the same method to install the other shock absorber.

d. After installing the bushing on the front wheel , align it with the mounting hole between the two shock absorbers, insert the front wheel axle, and tighten the front wheel axle with a 17 # hexagon socket . Torque : 50N.m (5.1 kgf.m, 37 lbf.ft). If one of the shock absorbers is not installed in place , the front wheel axle will not be tightened or cannot be inserted into the right shock absorber . The shock absorber that is not installed in place needs to be removed and then installed in place .

e . After installing the front wheel, use a 6 # hexagon socket to tighten the two M8×30 bolts on the lower part of the left front shock absorber . Torque : 20 Nm (2.0 kgf.m, 15 lbf.ft) .

f. Use a flat screwdriver to separate the two brake pads inside the brake caliper . If the resistance is too great and the two brake pads cannot be separated , refer to the method in " Adding brake fluid " to remove the upper cover of the disc brake oil cup and then separate the two brake pads . Align the gap between the two brake pads in the disc brake caliper with the brake disc on the front wheel and install them. Then use 8# hexagon socket to tighten the two M10 bolts , torque : 45 ~ 50N.m (4.6 ~ 5.1 kgf.m, 33 ~ 37 lbf.ft) .

g. Press the position where you pressed when removing the front fender , and then tighten the shock absorber in the middle.

Pass through the appropriate position and install it to the corresponding position. Use a T45 hexagonal wrench to reinstall the four M6×14 shoulder bolts. Use a 10# socket to tighten the front fender with the M6×20 bolts on the left front shock absorber. For the right front shock absorber, install the front oil outlet pipe clamp and then use a 10# socket to tighten the M6×20 bolts .

Replace the lower connecting board

Note: After the front wheel is removed, do not press the brake handle .

● When removing the disc brake oil cup , be sure to point it vertically upwards to prevent air from entering the brake line.

● After disassembly, make sure all parts are reinstalled correctly.

● Apply appropriate amount of grease when installing the bearing

1. Disassemble parts in advance

a . Refer to " Replacing the Front Wheel", " Replacing the Front Shock Absorber " and " Replacing the Handlebar " to disassemble the front wheel, front shock absorber and handlebar .

2. Remove the direction pad and upper connecting plate

a. Use a T45 hexagon wrench to remove the two M6×14 shoulder bolts (1) and remove the sunshade (2).

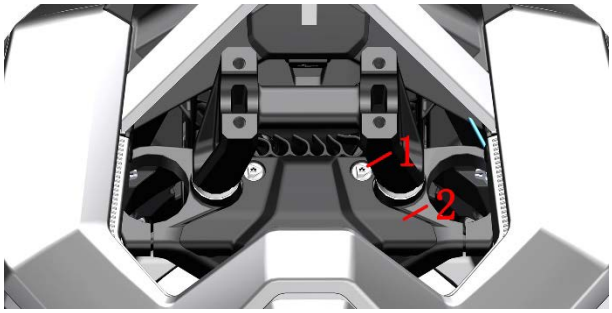

b. Use a ratchet wrench + extension rod + 30 # sleeve to remove the cap nut (8) of the upper connecting plate, and remove the gasket (9). Take out the gasket and the upper connecting plate together .

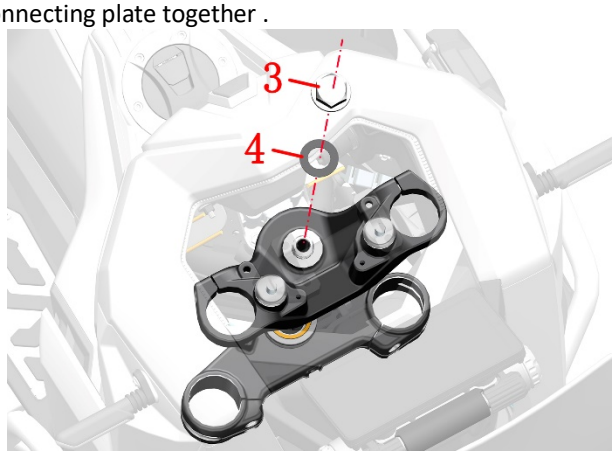

3. Remove the lower connecting plate assembly

a. Use a pick to remove the anti-loosening washer of the adjusting nut, unscrew the first steering column adjusting nut, and remove the adjusting nut washer. One person holds the lower connecting plate with his hands, uses a ratchet wrench and adjusting nut tooling to remove the second steering column adjusting nut, removes the dust cover and pulls the lower connecting plate downwards. Please refer to the exploded diagram of the lower connecting plate .

4. Install the lower connecting plate assembly

Apply a proper amount of lubricating oil to the new lower connecting plate assembly and install it from the bottom of the frame .

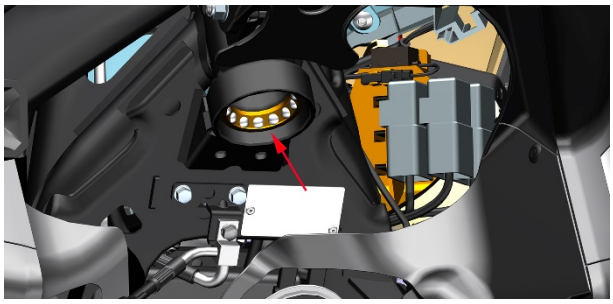

b. Put the steering column dust cover (1) and the steering column adjustment nut (2) in sequence . Then use the adjustment nut tool to tighten the torque. First tighten to 50N.m (5.1 kgf.m, 37 lbf.ft) , then loosen 1/4 turn , and then tighten to 15 N.m (1.2 kgf.m, 11 lbf.ft).

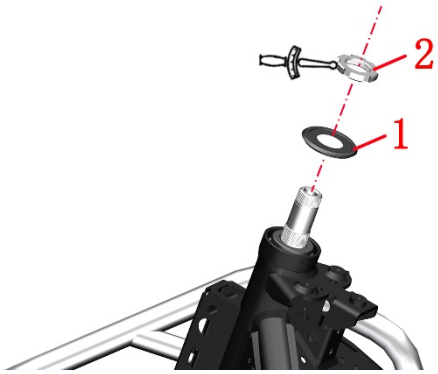

c . Ensure that the lower connecting plate rotates without getting stuck or loose, and then put in the adjusting nut washer (3), the steering column adjusting nut (2), and the adjusting nut anti-loosening washer (4) in sequence. This nut only needs to be tightened and aligned with the first nut.



d . Put the upper connecting plate (7) in , then put the gasket (6), and pre-tighten the upper connecting plate decorative nut (5). Note: Tighten the upper connecting plate decorative nut after installing the shock absorber. Torque: 100 Nm (10.2 kgf.m, 74 lbf.ft) .



5. Install other disassembled components

a. Refer to "Replacing the Front Shock Absorber " to reinstall the front shock absorber.
b. Refer to "Replacing the Front Wheel " to reinstall the front wheel assembly.
c. Refer to "Replacing the Handlebar " to reinstall the handlebar assembly .

DANGER

- The vehicle must be parked on a flat, stable ground or a lift.
- After each removal or installation of the front wheel, the brake handle must be pressed repeatedly until the vehicle's braking effect is restored .

11. Disassembly and assembly of vehicle covering parts



1. Windshield 2. Hood 3. Headlight 4. Upper head decoration 5. Right side head panel 6. Right pedal front decoration cover 7. Right side cover 8. Right side cover lining 9. Right rear footrest decoration cover 10. Right part of lower air deflector 11. Right part of fuel tank cover 12. Right rear tail cover 13. Right part of rear tail cover low lining 14. Rear fender 15. Right rear armrest 16. Seat cushion 17. Right decoration cover of fuel tank lock 18. Right decoration strip of fuel tank lock 19. Middle part of front storage box 20. Upper rear decoration cover 21. Upper front decoration cover



1. Windshield 2. Hood 3. Headlight 4. Head upper decoration 5. Head left side panel 6. Left pedal front decoration cover 7. Left side cover 8. Left side cover lining 9. Left rear footrest decoration cover 10. Lower air deflector left part 11. Fuel tank cover left part 12. Left rear tail cover 13. Left tail cover low lining right part 1 4. Rear fender 15. Left rear armrest 16. Seat 17. Fuel tank lock left decoration cover 18. Fuel tank lock left decoration strip 19. Front storage box middle part 20. Upper surround rear decoration cover 21. Upper surround front decoration cover

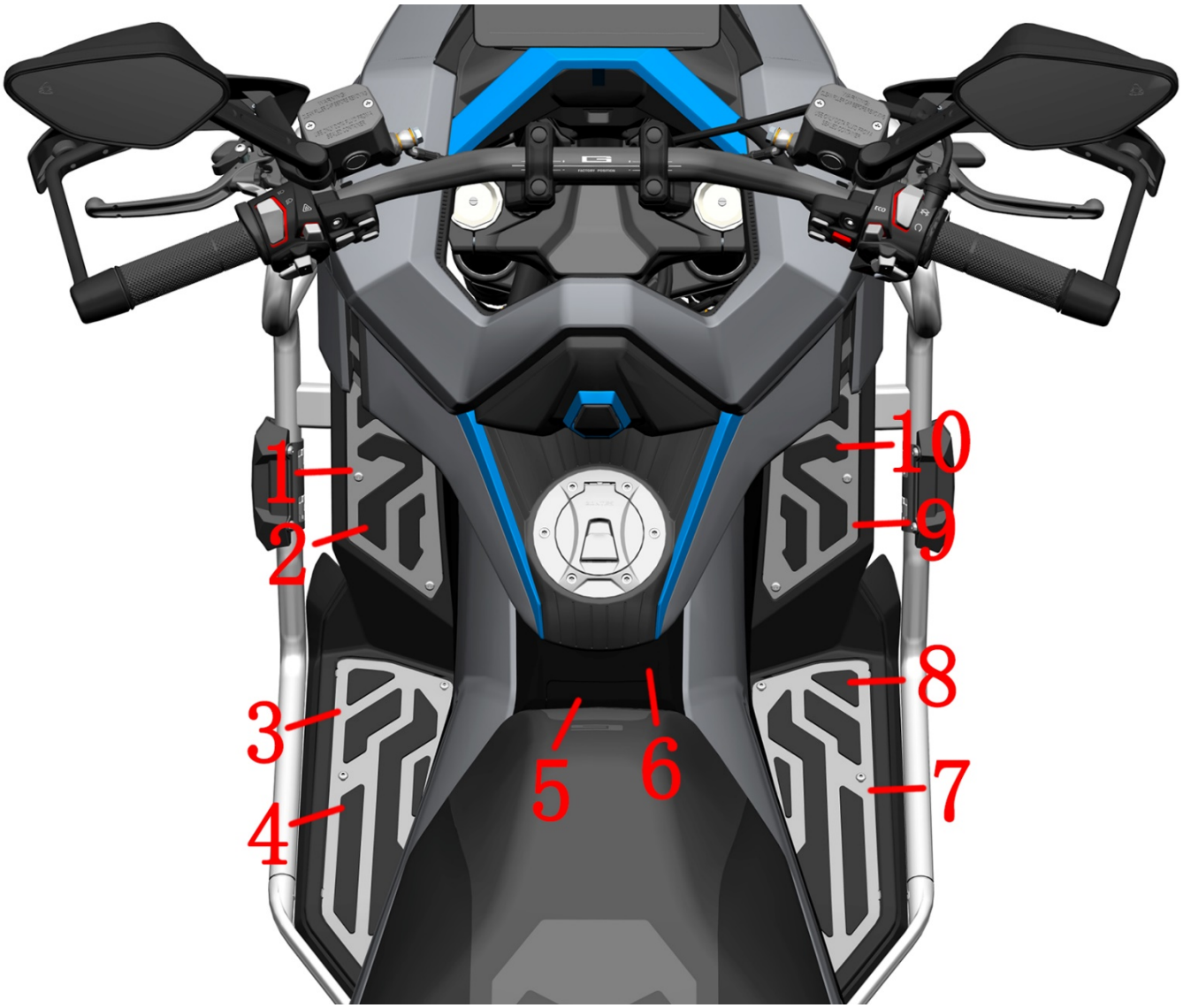

1. Front left pedal rubber pad pressure plate 2. Front left pedal rubber pad 3. Rear left pedal rubber pad pressure plate 4. Rear left pedal rubber pad 5. Fuel tank movable cover 6. Fuel tank cover middle 7. Rear right pedal rubber pad pressure plate 8. Rear right pedal rubber pad 9. Front right pedal rubber pad pressure plate 10. Front right pedal rubber pad

Notice:

● Please pay attention to the amount of force when disassembling to avoid breaking the buckle.

●When removing the covers , please remove them strictly in order and do not forcefully remove the covers to avoid irreparable damage to the corresponding covers .

When unplugging the plug, please control the force and the method of disassembly. Do not unplug the plug forcibly to prevent damage to the plug, which will lead to poor contact of the wiring harness connector and affect the function of various parts .

●When installing the wiring harness plug, please check whether the wiring harness pins in the wiring harness male plug are deformed or misplaced to prevent damage to the wiring harness pins in the wiring harness male plug during installation , thereby affecting the functions of various parts.

Removal of the hood

a. Use a pick or other suitable tool to remove the two expansion screws that secure the head cover.

b . Gently tap the hood in the direction of the arrow to remove it.

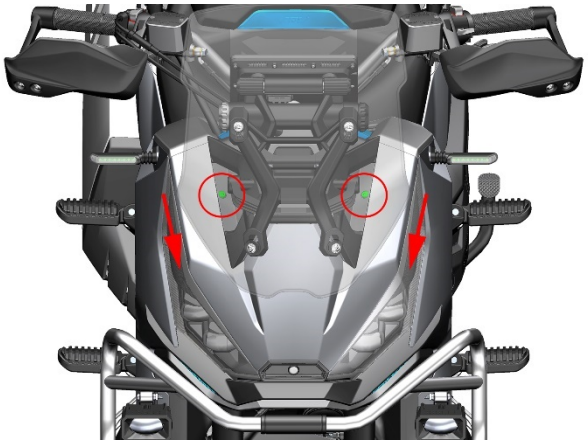

Removal of windshield instrument assembly

a . Use an 8 # socket to remove the four bolts (1), and use a T25 plum wrench to remove the two bolts (2).

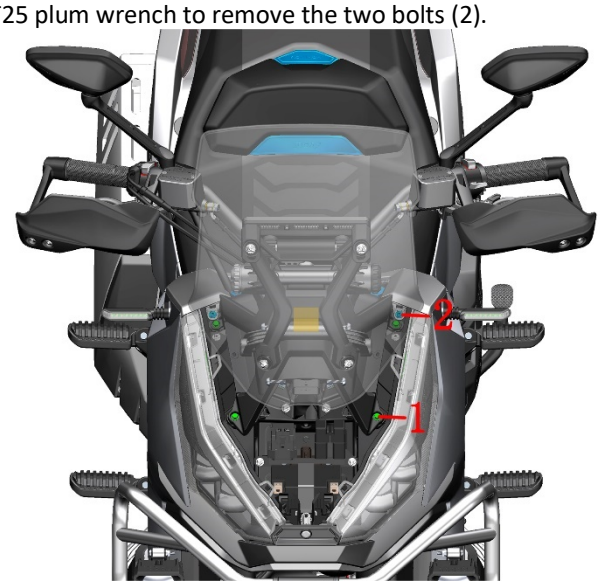

b. Lift the windshield assembly and unplug the instrument connector.



c . Remove the windshield instrument assembly



Disassembly of windshield instrument assembly

a. Use a T25 box end wrench to remove the four bolts (1), take off the nylon gasket (2) and the bushing (3).

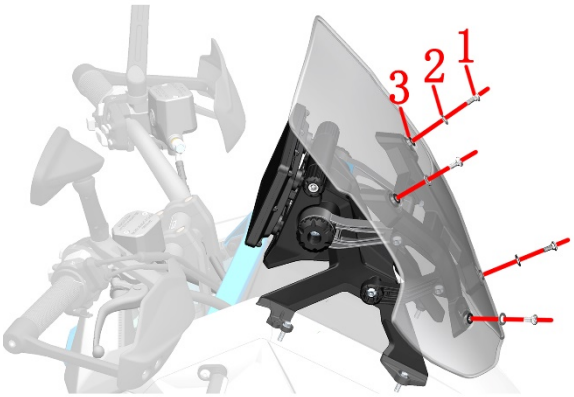

b. Remove the gasket (4) and nut (5) on the windshield bracket.

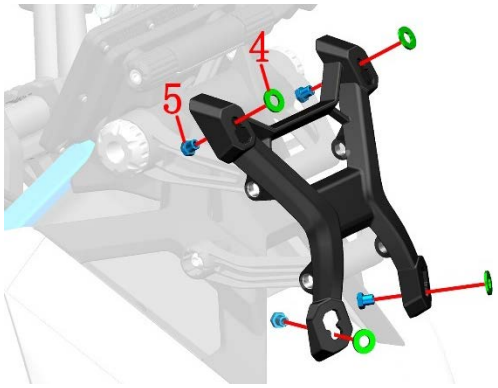

Removal of windshield lining

a . Use a 4 # hexagon socket or hook to press down the center cylindrical pin of the expansion screw , then remove the expansion screw , carefully open the buckle and remove the windshield lining.

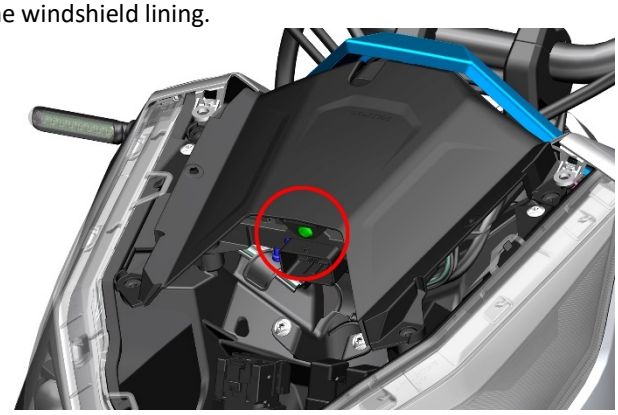

Removal of the upper rear trim cover

a . Remove the windshield and windshield lining assembly.

b . Use a 4 # hexagon socket or crochet hook to press down the center cylindrical pin of the expansion screw , then remove the 5 expansion screws , carefully open the buckle by hand, and remove the upper enclosure rear decorative cover.

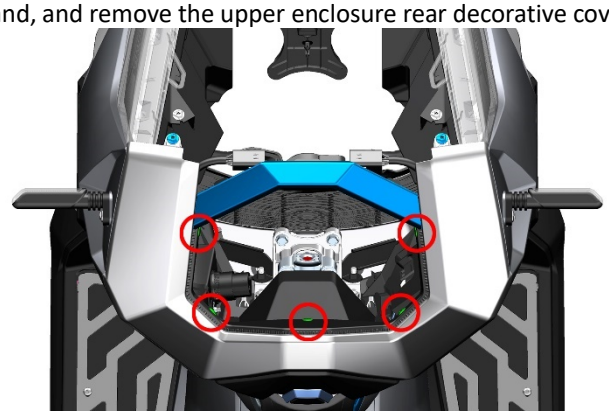

Removal of the head decoration

a. Use a crochet hook to pry open the edge of the right decorative cover on the head and remove the right decorative cover. Use the same method to remove the left decorative cover.



b . Use a 4 # hexagon socket or a crochet hook to remove the four expansion screws and take off the decorative piece on the head.

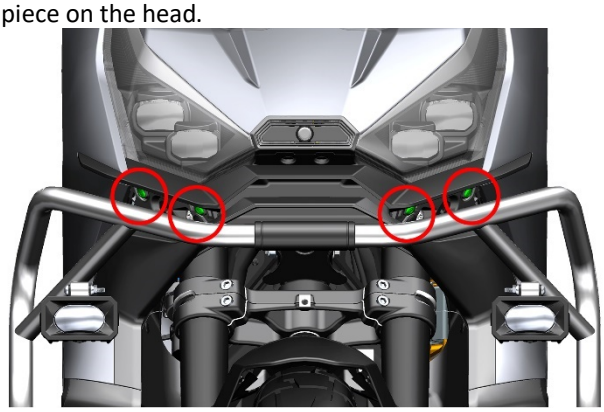

Removal of the fuel tank lock decorative cover and head side panel assembly

a. Refer to "Removal of windshield lining" to remove the windshield lining

b . Use a 4 # hexagon socket or a hook to remove the two expansion screws , carefully tap the cover in the direction of the arrow, and remove the right fuel tank lock decorative cover.

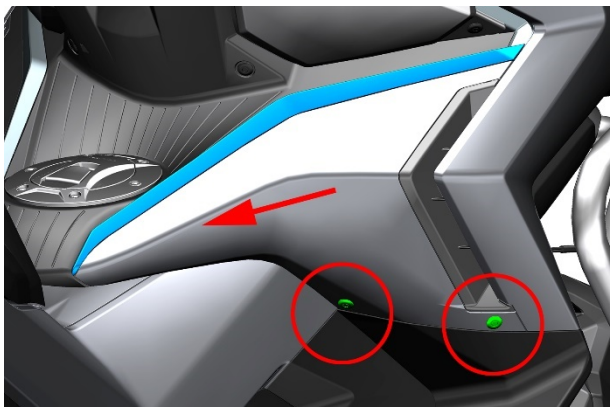

c. Use a # 4 hexagon socket or hook to remove the expansion screw that secures the right side plate assembly of the head.

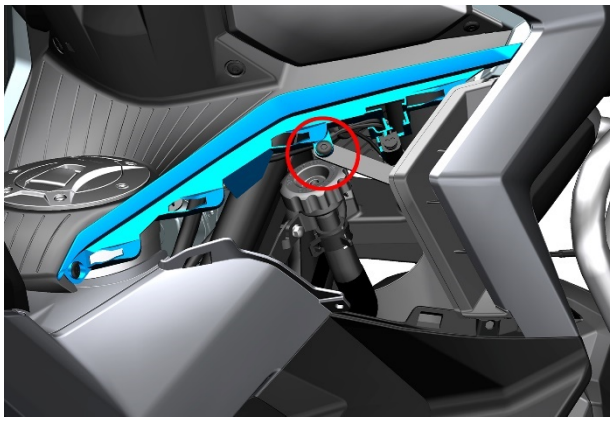

d . Find the plug of the turn signal and unplug the connector of the right turn signal.

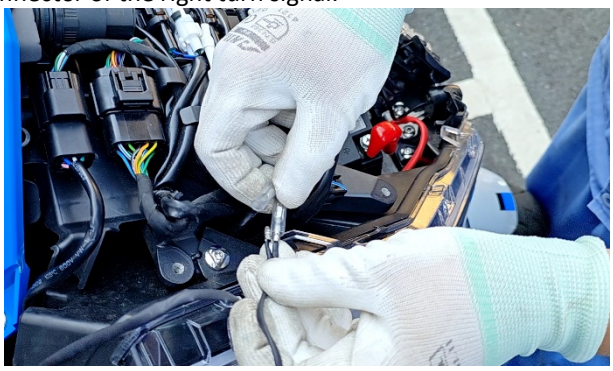

e . Remove the right side panel of the head. The removal method of the left side panel of the head refers to the removal of the right side panel.



Removal of head lining and headlights

a. Use a T2 5 star wrench and a hook to remove the 8 bolts (1) and 4 expansion nails (2) on the left and right sides respectively.

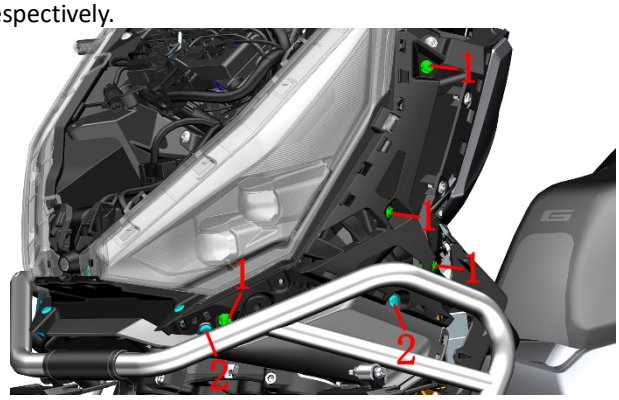

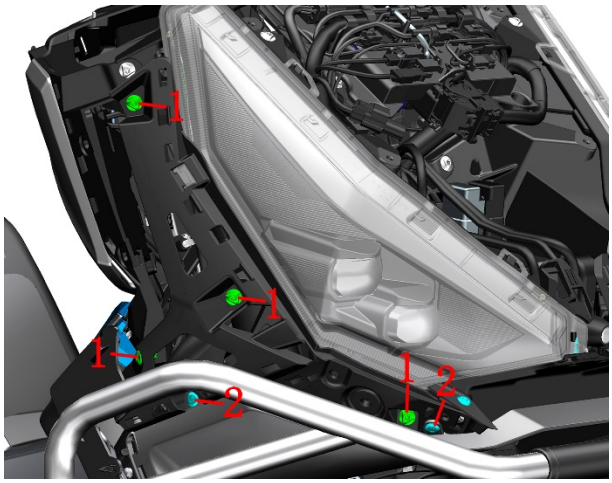

b. Use a hook to remove the 4 expansion screws shown in the picture.

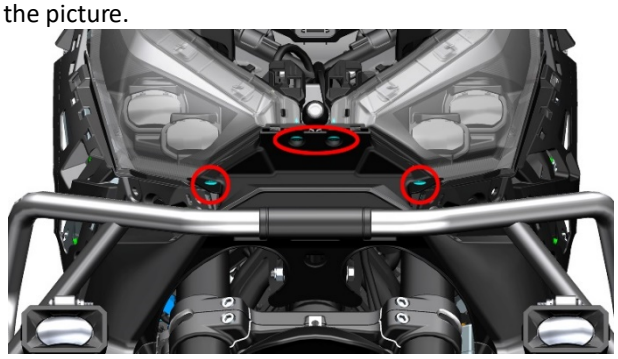

c . Remove the left and right head linings.

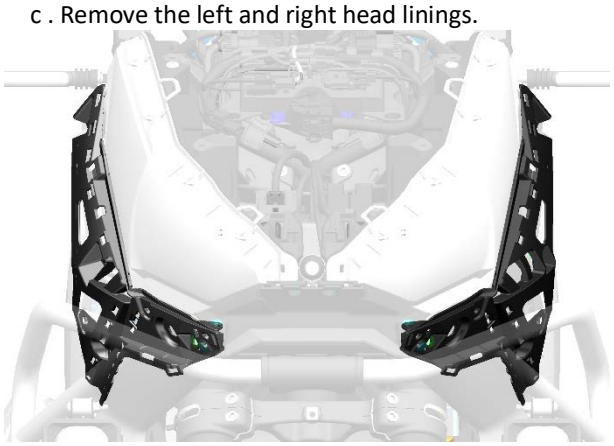

d. Use a T2 5 -opening spanner to remove the seven bolts on the left and right sides as shown in the figure.

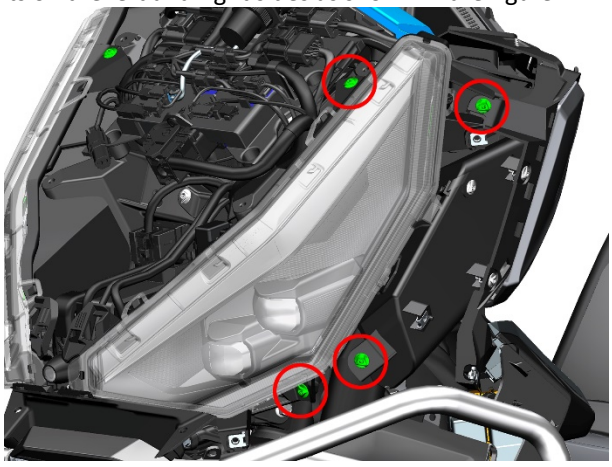

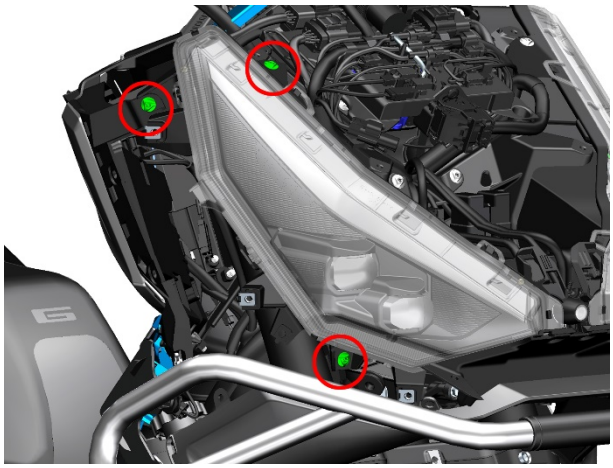

e. Use a T2 5 -inch box end wrench to remove the two middle bolts as shown in the figure.

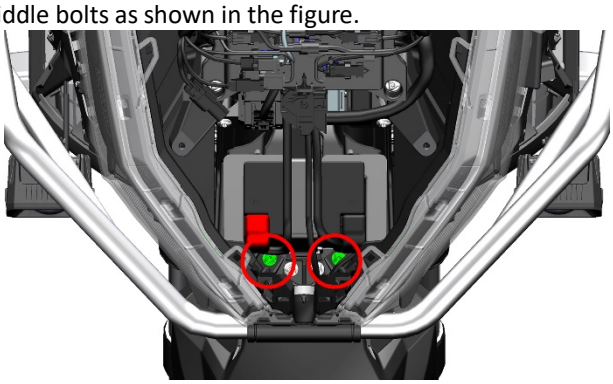

f. Unplug the left and right headlight plugs and remove the headlights.

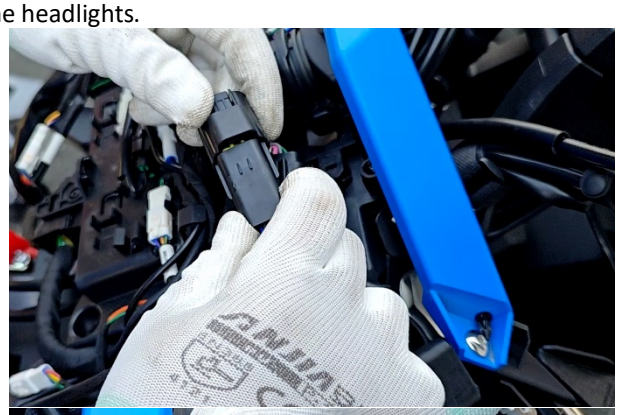

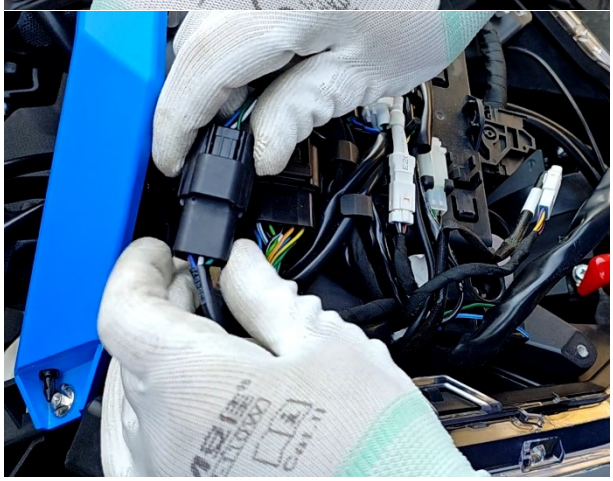

Removal of storage box

a. Hold the two sides of the storage box partition (1) with your hands, remove the partition, and then gradually pull the anti-wear pad (2) from the edge gap of the storage box. Note : The seat cushion does not need to be removed when removing the storage box alone.

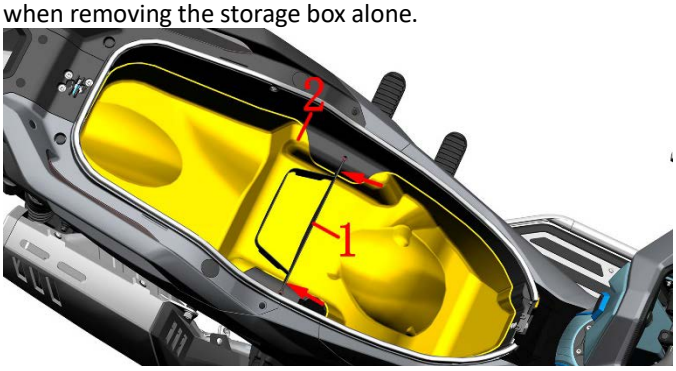

b . Use a T25 hexagonal wrench to remove the eight M6 bolts securing the rear storage box .

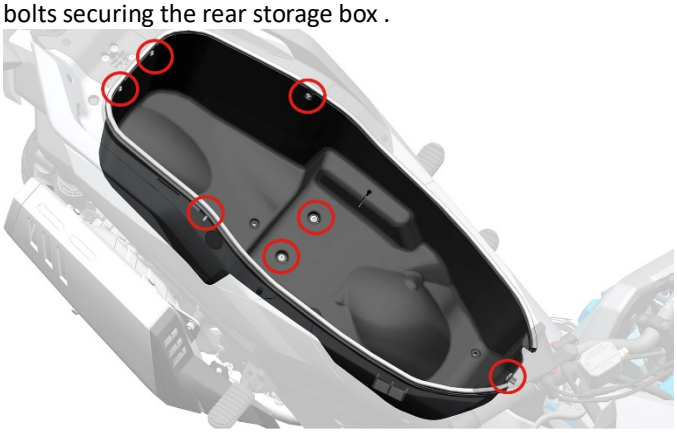

c . Lift the back of the storage box slightly until the wiring harness connector on the left side of the storage box is exposed. Find the ambient light plug and USB cable on the left side of the storage box , unplug the plug and take out the storage box completely .



Removing the middle/left/right part of the fuel tank cover

a. Refer to the steps for removing the seat cushion and storage box, and take off the seat cushion and storage box.

b. Refer to the removal of the fuel tank lock cover, and remove the left and right covers of the fuel tank lock.

c. Use a pick to remove the two expansion pins①. The arrow shows the clip position, which requires a bit of force to remove. Then, follow the direction in the picture and slide from left to right to take off the entire left part of the fuel tank cover.

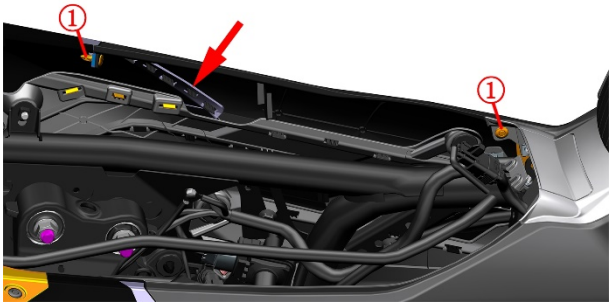

d. The disassembly method for the right side is the same as the left side; you can refer to the left-side disassembly method to remove the right side.

e. Use a T25 Torx wrench to remove the two bolts in the middle of the fuel tank cover②, then take off the middle part of the fuel tank cover③.

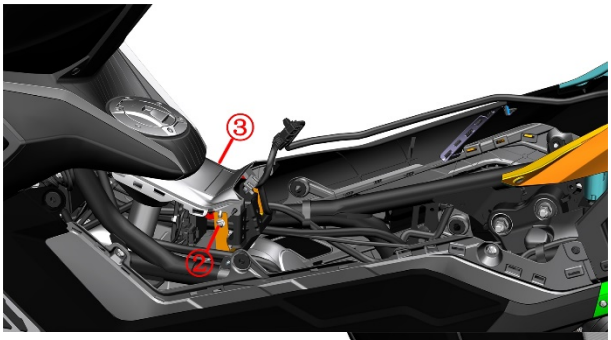

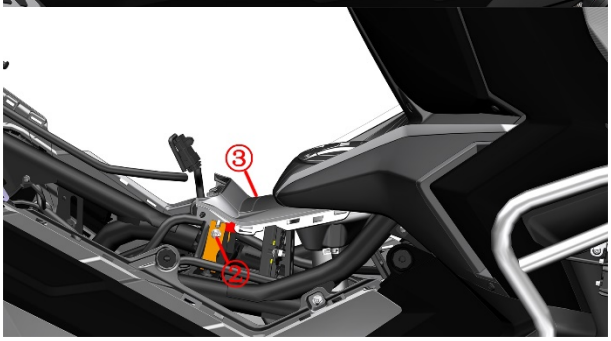

f. Reinstall according to the disassembly method. When installing the left and right parts of the fuel tank cover, be sure to align the clips.

Removing the left/right side cover of the fuel tank

a. Remove the rear skirt by following the method used for disassembling rear skirt.

b. Gently pry open the left cover ① at the spot circled in the diagram, then slowly remove the entire left cover ① in the direction of the arrow.

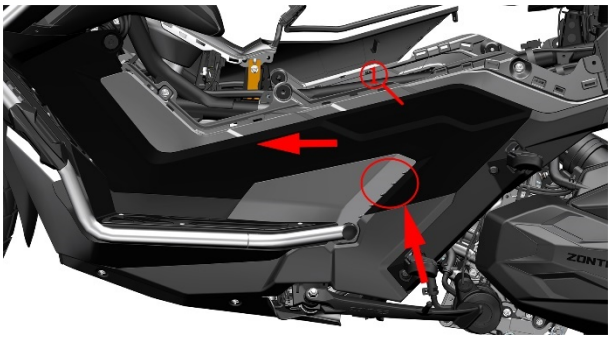

c. The method on the right is the same, you can refer to how the left cover was removed.

d. The left and right side cover liners need to have the pedal trim cover and lower deflector removed in order before they can be taken off. For details, refer to the removal of the lower deflector. then remove the left and right side cover liners.

e. Reinstall according to the disassembly method.

Removing the pedal cover

a. Use a No. 3 Allen wrench to remove the six bolts ① that secure the left front and rear pedal rubber pad clamps, GB70.2M5×12 (stainless steel).

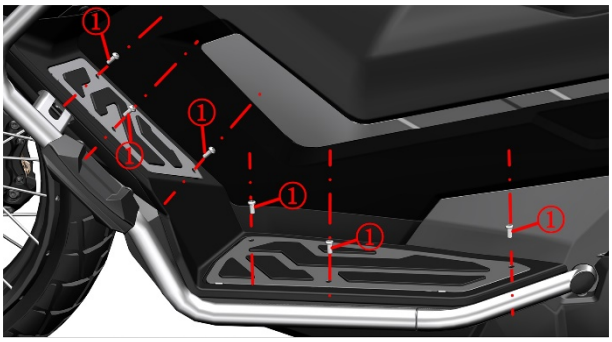

b. Use a flathead screwdriver to pry up the left front pedal pad and the left rear pedal pad retainer from the spot indicated by the small arrow, then remove the pedal pads and the pedal pad retainers.

CAUTION： When prying with a flathead screwdriver, you can wrap it with something like a non-woven cloth to prevent scratching the paint.

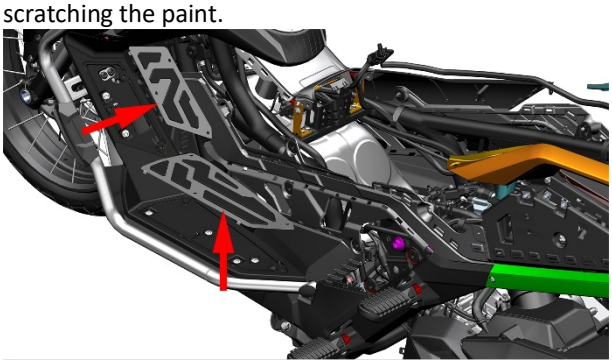

c. Referring to the removal of the fuel tank lock cover, after taking off the left fuel tank lock cover, pull out the spotlight wiring connector, organize the wiring, and use a pick to help remove the wire clips.

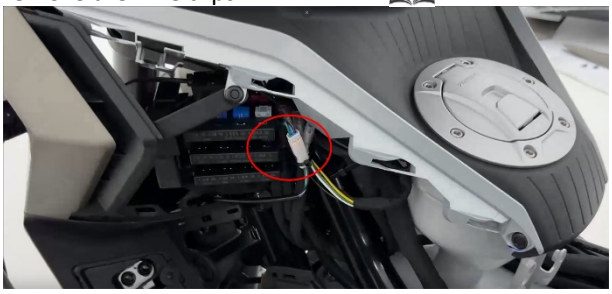



d. After pulling out the left bumper waterproof plug ③, use a T45 Torx wrench to remove the left bumper mounting bolt ②.

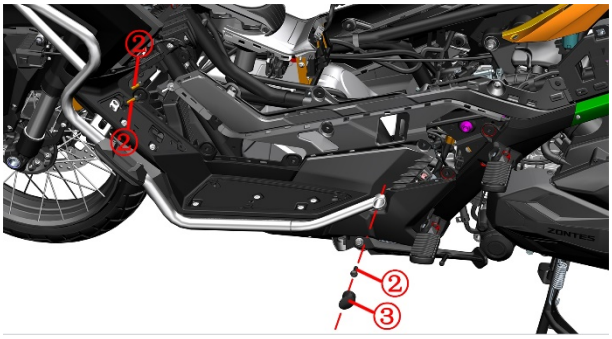

e. After removing the front bumper trim rubber, use a T25 Torx wrench to unscrew the two front bumper mounting bolts ④.

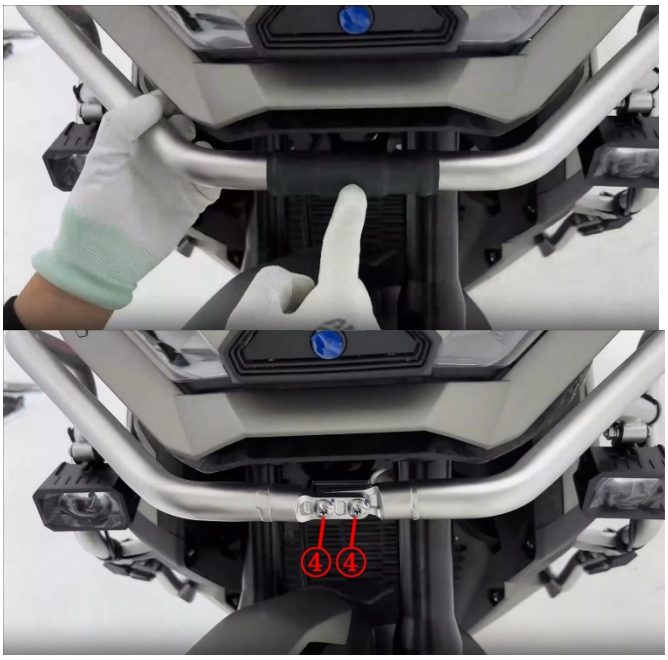

f. Take out the left bumper guard, and be careful with the wiring connectors when doing it.

g. Remove the right bumper guard the same way as the left bumper guard.

h. The left and right front pedal covers, as well as the left and right rear pedal covers and pedals, need to be removed in order after taking off the middle and bottom parts of the fairing. For more details, refer to the fairing removal section below.

Removing the middle/ lower /left/right parts of the fairing

a. Use a pick to remove the expansion pin ①, and use a T25 Torx wrench to remove the middle fixing bolt ② of the lower air guide cover (internal Torx shoulder screw M6×14 + Φ8.5×2.9).

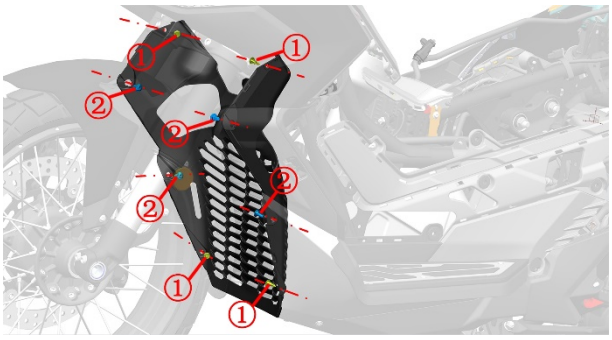

Remove the middle part of the lower air deflector and reinstall it following the disassembly method.

b. Caution: The lower diffuser on the 2024 model is made of aluminum, while on the 2026 model it's made of plastic. Here, we'll use the 2026 model as an example.

Low pedal: Use a T25 Torx wrench to remove bolts ④ (non-standard internal Torx bolt M6×16) and ⑤ (internal Torx shoulder screw M6×14 + Φ8.5×2.9) one by one. When removing bolt ④, it's recommended to take ③ and ④ together to avoid losing them.

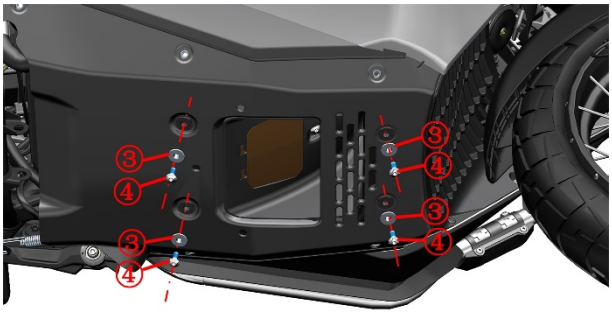

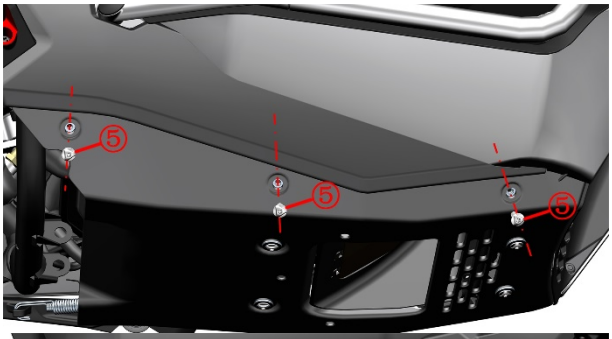



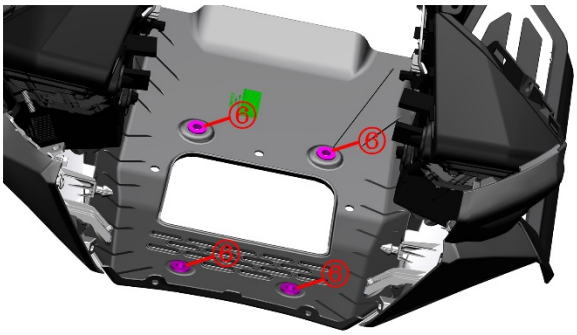

Reinstall according to the disassembly method.

c. Use a pick tool to remove the expansion anchor at the position shown in the picture.

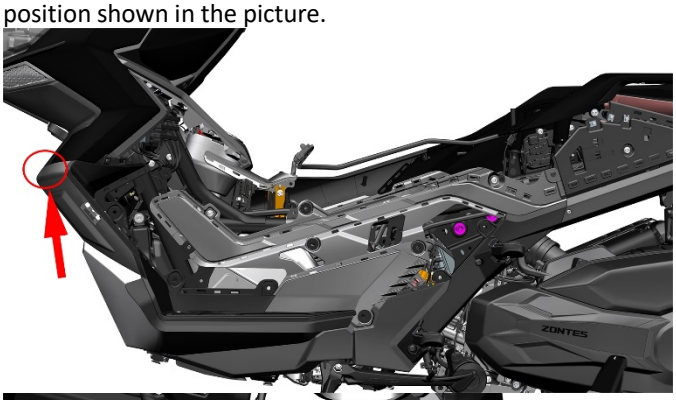

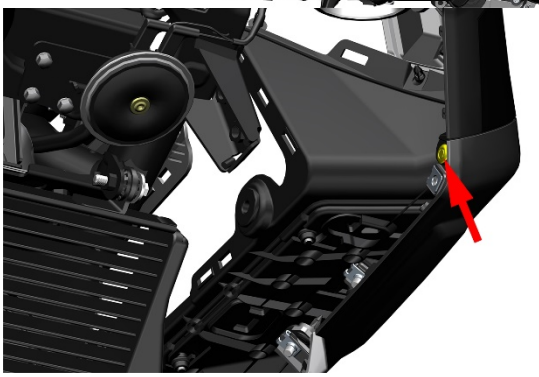

d. Then use a T25 Torx wrench to remove the bolts ② on the left cover liner and the left pedal (internal Torx shoulder screw M6×14 + Φ8.5×2.9) as well as the expansion pin ①.

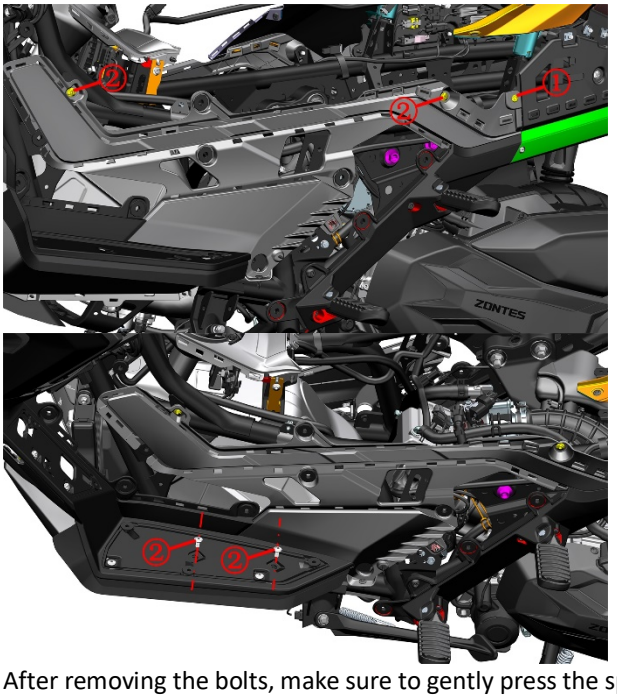

After removing the bolts, make sure to gently press the spot shown in the picture below first to release the clips inside, then take off the whole left cover that was removed (including the left side cover liner, left front pedal trim, left rear pedal trim, left pedal, and the left part of the lower air guide).



e. As shown in the picture below, use a T25 Torx wrench to remove bolt ② on the left front footrest trim cover.

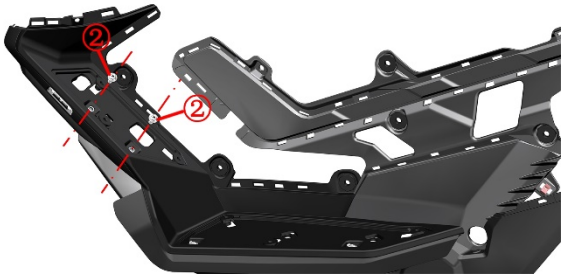

Use a trim removal tool to take out an expansion pin behind the left front pedal cover.



Take off the left front pedal cover, and be careful not to lose the clip.

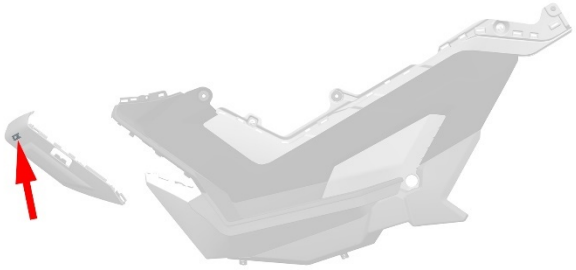

f. Low pedal: Use a Phillips screwdriver to remove the 4 non-standard Phillips self-tapping screws ⑦, with a torque of 1.3–1.8 N·m.

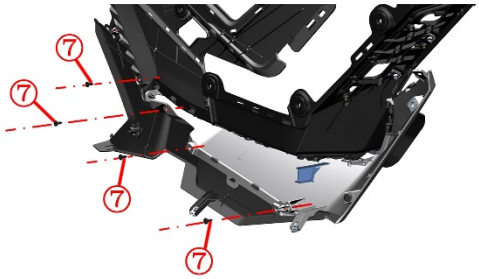

Use a pick to remove an expansion bolt.



Then remove the left part of the lower fairing.

g. Use a T25 Torx wrench and a pick to remove bolt ② and the expansion pins indicated by the arrows in the diagram.

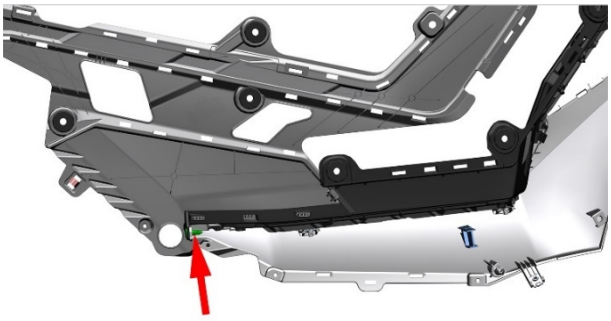

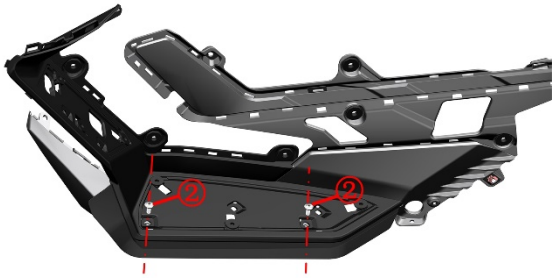

When removing the left rear pedal trim cover, be mindful of the clips; you'll need to apply a bit of force to take it off. As shown in the circle in the picture below, note that the arrow points to the clip on the left rear pedal trim cover, so don't miss it.

Low Pedal:

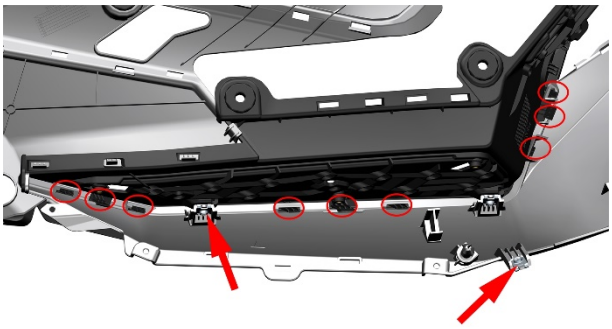

As shown by the arrow in the picture, remove the left pedal cover.

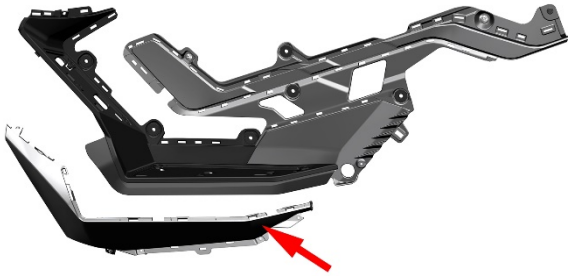

As shown by the arrow in the picture, remove the left pedal cover.

h. Next are the left pedal and the left side cover liner. When removing the left side cover liner, pay attention to the position of the clips, as shown in the picture.

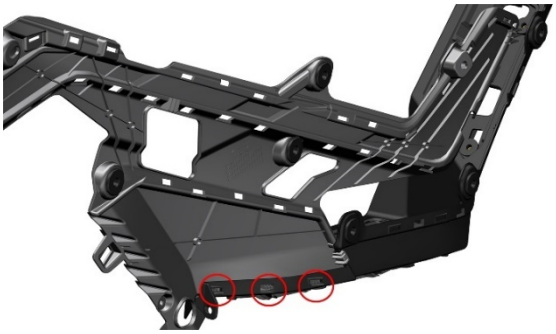

Low pedal (left cover liner):

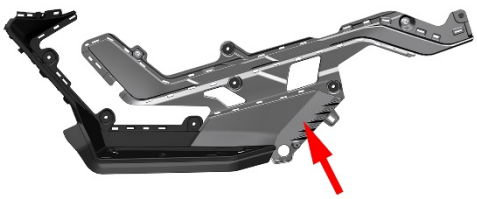

i. The disassembly method for the right side is the same as the left side. You can refer to the left side disassembly method, and just reinstall it according to the disassembly steps.

Removal of left and right rear armrests

a. Use appropriate tools to remove the two rear armrest front plugs and two M8 external hexagon bolt decorative buckles at (1) . Use a 10 # sleeve to remove the four M8 bolts at (1) (The two M8 bolts near the tail in the early stage use a 12# socket),and then use a T25 wrench to remove the four bolts and gaskets at (2), use a pick to remove the two expansion nails at (3), and then remove the left and right rear armrests.

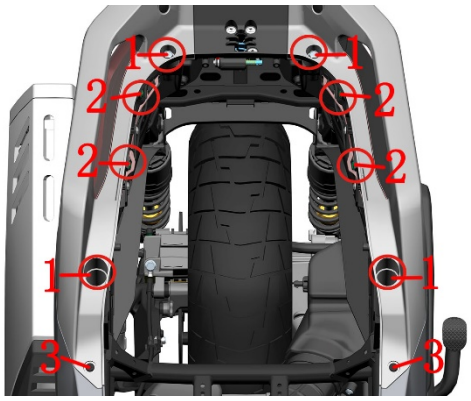

Rear cover assembly removal

a . Use a T25 hexagon wrench to remove the three M6 bolts (1), then unplug the tire pressure main unit connector (5), remove the right rear cover (2), pay attention to the buckle of the rear cover when removing, then remove the two M6 bolts (3) and three clamps (4) fixed on the tire pressure main unit . Disassemble and assemble the left rear cover assembly in the same way.

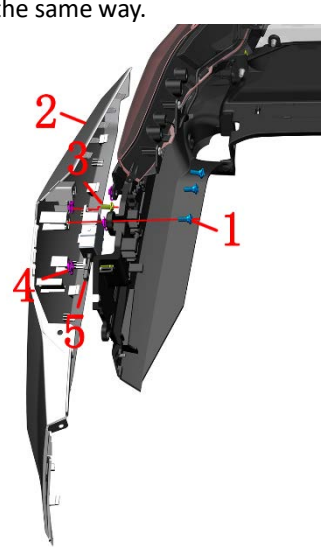

Removal of tail light assembly

a. Use a 3# hexagon socket wrench to remove the two hexagon socket screws (1), and then use a T 25 hexagon socket wrench to remove the two M 6 bolts (2) and (3), and then remove the right taillight assembly (4). Pay attention to the taillight wiring harness when removing the right taillight (4). For detailed disassembly, please watch the video of the disassembly and assembly of the rear cover. Use the same method to disassemble and assemble the left rear taillight assembly.

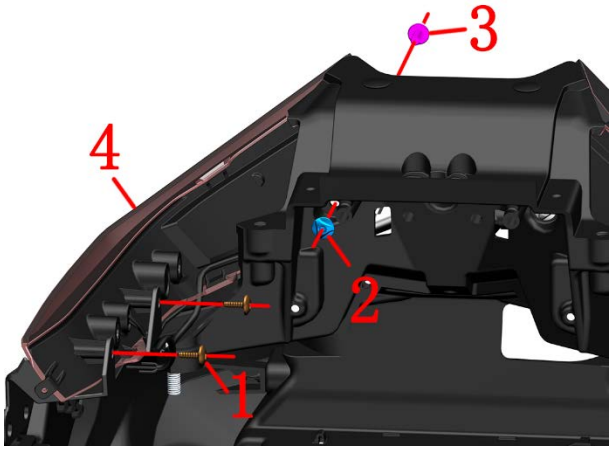

Rear camera assembly removal

a. Refer to "Removal of the Storage Box" to remove the seat cushion and storage box.

b. Use a flathead screwdriver to open the clip of the rear camera trim in the gap of the rear bracket.



B. Remove the camera assembly from the rear of the vehicle.

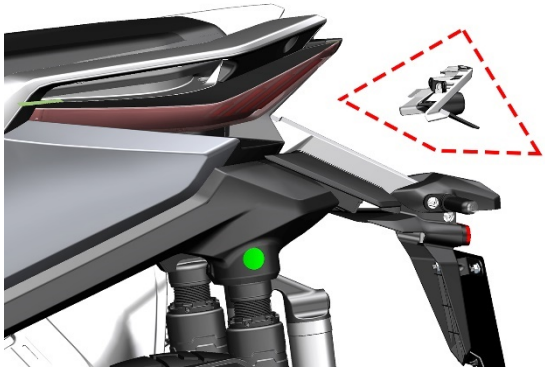

Removal of the tail cover trim

a . After removing the camera assembly by referring to “Removal of the rear camera assembly”, use a T20 plum wrench to remove an M6 × 14 shoulder bolt (1) .

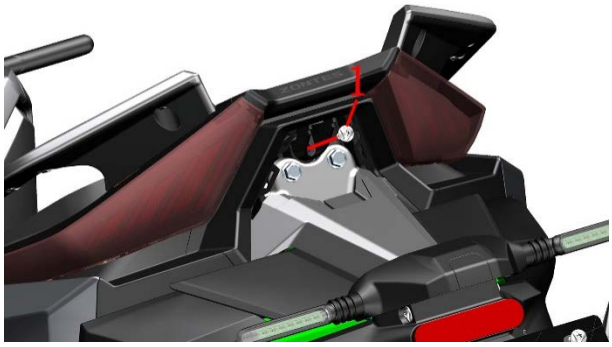

Removal of rear fender assembly

a. Refer to “Removal of the Tail Cover Center Trim” to remove the tail cluster center trim and rear camera.

b. Use a 10 # socket to remove the three M8 bolts .

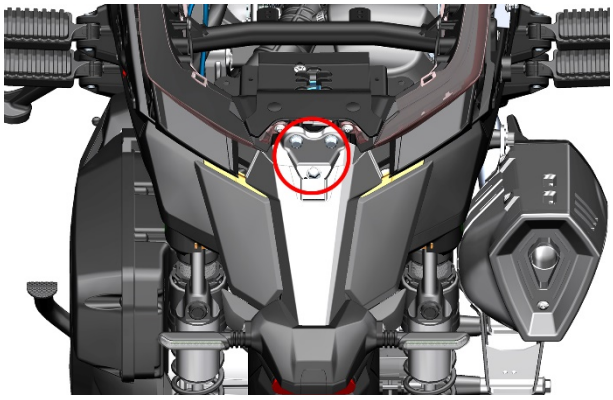

c. Unplug the connectors of the rear license plate light, left and right rear turn signals and rectifier, and remove the rear fender assembly.

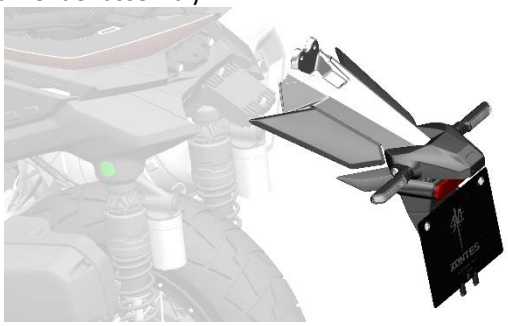

Removal of rear fender assembly

a. Refer to "Removal of Tail Light Assembly" to remove the tail light.

b . Use a 10# socket to remove the two M8 ×25 bolts (1) that secure the rear tail frame , and use a T25 box end wrench to remove the two M6 × 14 shoulder bolts (2) on the rear tail frame .

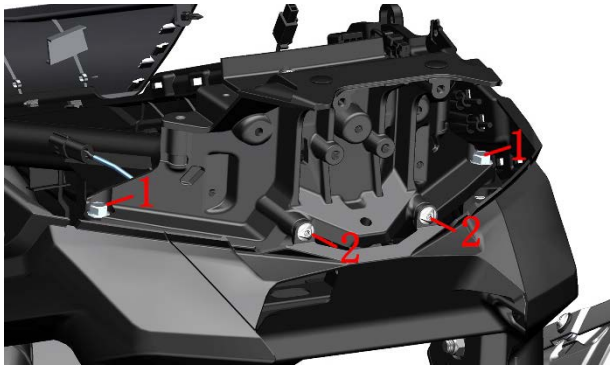

c . Unplug the seat lock plug and remove the rear tail rack.



Removal of rear cover lining

a. Use a T25 plum wrench to remove the two bolts (1), and use a hook to remove the expansion nails (2).

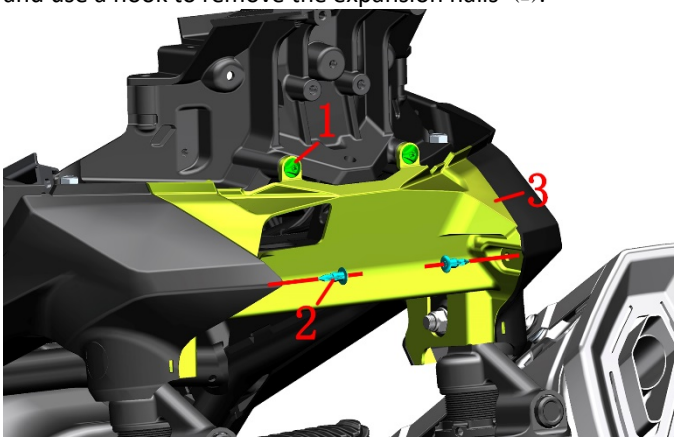

b. Use a hook to remove the two expansion nails near the shock absorber (2). Remove the lower part of the tail cover lining (3).

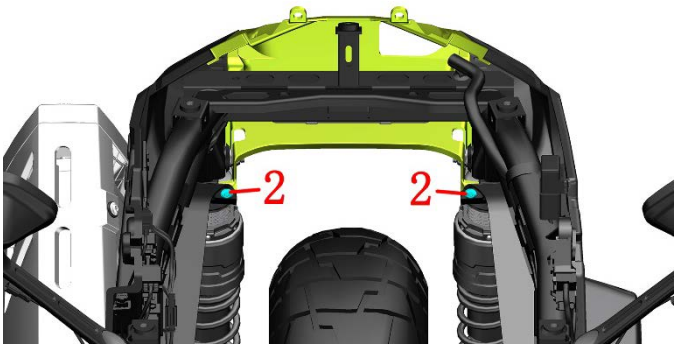

c. Use a hook to remove an expansion nail (1), use a T25 plum wrench to remove an M6×14 shoulder bolt (2), and use a 3# hexagon socket to remove an M4×12 bolt (3), then you can remove the right part of the rear cover bottom lining.

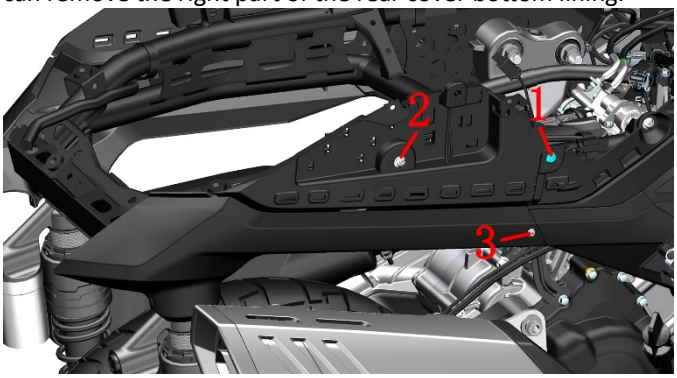

d. Use a hook to remove an expansion nail (1), use a T25 plum wrench to remove an M6×14 shoulder bolt (2), and use

a 3# hexagon socket to remove an M4×12 bolt (3), then you can remove the left part of the rear cover bottom lining.

