ZT125/155/310/350/368/150/250/368(ETC) T-M Maintenance Manual



2026-11-23

Introduction

All the materials, illustrations, photos, etc. collected in this manual are compiled according to the latest products of ZT310-M National IV. However, due to the continuous improvement of the product and other changes, there may be some inconsistencies between your motorcycle and this manual. For colors or upgrades, please refer to the part codes on the official website of Zontes. This manual will not be listed in detail; if the part names in this manual are inconsistent with the official website of Zontes, please refer to the official website of Zontes.Individual parts of different displacements that differ in shape or size but are disassembled and assembled in the same way, will not listed in this manual.

The M125/350/M125(2024)/155/368/150/250 steps are similar to the M310, taking the M310 as an example.

If part of the content of this manual is insufficient, please refer to the "Driver's Manual" included with the bike. The latest version of the driver's manual can be downloaded as a PDF in the model introduction corresponding to the official website of Zontes.

©GUANG DONG TAYO MOTORCYCLE TECHNOLOGY Co.,Ltd
All rights reserved

User notice

This manual is compiled by Guangdong Tayo Motorcycle Technology Co., Ltd. to guide dealers or service personnel to use it. This manual cannot provide more detailed knowledge about motorcycles, and is only for reference for maintenance. If you do not have the corresponding knowledge such as electrician, machine repair, etc., improper assembly or repair failure may occur during repair.

If you need to clean or wash the body parts of the vehicle, you should use neutral car wash fluid or tap water, diesel, kerosene, etc. Acidic or alkaline car wash liquid will cause irreversible corrosion of the surface paint, electroplating surface, and anodized surface of the parts; gasoline will cause premature aging or hardening of sealants, gaskets, and rubber parts, reducing the service life. Non-woven fabrics should be used for wiping with no residue. Ordinary rags may leave cloth scraps or wool, etc., which may affect the assembly or cause other adverse effects.

Our company will update this manual as soon as possible after the product changes.

The following is the meaning of the icons marked in this manual：

DANGER	Failure to observe will cause personal injury or death of the driver or maintenance personnel; or cause serious damage to parts and shorten the service life, etc.
WARNING	Failure to comply may result in personal injury or death of the driver or maintenance personnel; or damage to parts, abnormalities, etc.
CAUTION	Failure to observe the warning will cause personal injury to the driver or maintenance personnel; or matters requiring special attention during disassembly and assembly
	Indicates that there is a requirement for torque there
	Indicates that the piece needs to be replaced after disassembly

Content

Introduction 2

User notice 3

Content 4

1. Vehicle information 15
- Know Before Service 15
- Body label 16
- M310 Technical specification 17
  - Front wheel/steering system 17
  - Rear wheel/suspension system 17
  - Brake system 17
  - Battery/charging system 18
- M125/M125(2024) Technical specification 18
  - Front wheel/steering system 18
  - Rear wheel/suspension system 19
  - Brake system 19
  - Battery/charging system 19
- M350 Technical specification 20
  - Front wheel/steering system 20
  - Rear wheel/suspension system 20
  - Brake system 20
  - Battery/charging system 21
- M155/150 Technical specification 22
  - Front wheel/steering system 22
  - Rear wheel/suspension system 22
  - Brake system 22
  - Battery/charging system 23
- M368/M368(ETC) Technical specification 24
  - Front wheel/steering system 24
  - Rear wheel/suspension system 24
  - Brake system 24
  - Battery/charging system 25
- M250 Technical specification 26
  - Front wheel/steering system 26
  - Rear wheel/suspension system 26
  - Brake system 26
  - Battery/charging system 27
- Lamp/Speedometer/switch description 28
- Tightening torque 28
  - Bolt tightening torque of general tightening part 28
- Cable/ pipe/electrical device distribution map 29
  - 1. Distribution map of lamps and lanterns 29
  - 2. Throttle cable 29
  - 3. Brake upper pump and brake hose 30
  - 4. Calipers, brake hoses and wheel speed sensors 30
  - 5. Distribution map of brake system accessories 31
    - 5.1 M310 31
    - 5.2 M125 32
    - 5.3 M350/368 33
    - 5.4 M155 34
    - 5.5 M250 35
    - 5.6 M368(ETC) 36
  - 6. Oil supply system 37
    - 6.1 M310/250 Fuel evaporation 37
    - 6.2 M125/155 Fuel evaporation 38
    - 6.3 M350 Fuel evaporation 38
    - 6.4 M368 Fuel evaporation 39

6.5 M368（ETC） Fuel evaporation 39
6.6 M310/250 Fuel supply 40
6.7 M125/155 Fuel supply 40
6.8 M350 Fuel supply 41
6.9 M150 Fuel supply (Euro Ⅱ) 41
6.10 M368 Fuel supply 42
6.11 M368(ETC) Fuel supply 42
7. Distribution map of cooling system accessories 43
7.1 M310 43
7.2 M125/155 44
7.3 M350/250/368 45
7.4 M368(ETC) 46
8. Electrical device layout 47
8.1 M125 47
8.2 M310 49
8.3 M350/250/368 51
8.4 M368(ETC) 52
9. Intake and exhaust system 53
9.1 M310 53
9.2 M125 54
9.3 M350/368 55
9.4 M250 56
9.5 M368(ETC) 57
Tool 58
Swell nail description 59

2. Maintenance 60
Know Before Service 60
M310 Maintenance schedule 61
M125/M125(2024) Maintenance schedule 63
M350/368/250 Maintenance schedule 64
M155/150 Maintenance schedule 65
M368(ETC) Maintenance schedule 67
M310/250 Air filter (filter element), air inlet filter element 69
1. Support the vehicle firmly 69
2. Remove the left engine cover 69
3. Remove the air inlet cover 69
4. Replace the air inlet filter 70
5. Remove the air filter housing 70
6. Replace Air filter element 70
7. Inspection air filter waste oil pipe 70
8. Reinstall 71
M125 Air filter (filter element), air inlet filter element 72
1. Support the vehicle firmly 72
2. Remove the left engine cover 72
3. Replace the air inlet filter 72
4. Remove the air filter housing 73
5. Replace Air filter element 73
6. Inspection air filter waste oil pipe 73
7. Reinstall 73
M125(2024) Air filter (filter element), air inlet filter element 74
1. Support the vehicle firmly 74
2. Remove the left engine cover 74
3. Remove the air intake cover 74
4. Replace the air inlet filter element 74
5. Replace Air filter element 75
6. Inspection air filter waste oil pipe 75
7. Reinstall 75
M350 Air filter (filter element), air inlet filter element 75
1. Support the vehicle firmly 75
2. Remove the left engine cover 76

3. Replace the air inlet filter element 76
4. Remove the air filter shell 76
5. Replace the filter element of the air filter 77
6. Check the waste oil pipe of air filter 77
7. Reassembly 77
M155 air filter (filter element), air inlet filter element 78
1. Support the vehicle firmly 78
2. Remove the left engine cover 78
3. Remove the air inlet cover 78
4. Replace the filter element of the air inlet 78
5. Replace the air filter element 78
6. Check the waste oil pipe of the air filter 79
7. Reassembly 79
M368 Air filter (filter element), air inlet filter element 79
1. Support the vehicle firmly 79
2. Remove the left engine cover 79
3. Replace the air inlet filter element 80
4. Remove the air filter shell 80
5. Replace the filter element of the air filter 80
6. Check the waste oil pipe of air filter 80
7. Reassembly 80
M368(ETC) Air filter (filter element), air inlet filter element 80
1. Support the vehicle firmly 80
2. Remove the left engine cover 81
3. Replace the air inlet filter element 81
4. Remove the air filter shell 81
5. Replace the filter element of the air filter 81
6. Check the waste oil pipe of air filter 81
7. Reassembly 82
Bolts and nuts of muffler 83
1. Check for air leaks at the engine exhaust. 83
2. Check for nut and bolts at the muffler 83
M310/350/368/250 Spark plug 85
1. Disassemble the spark plug 85
2. Check the spark plug 86
3. Refer to the steps to remove the spark plug to restore all parts. 86
M125/155 Spark plug 87
1. Disassemble the spark plug 87
2. Check the spark plug 88
3. Refer to the steps to remove the spark plug to restore all parts. 88
Engine oil 89
M310/250 89
1. Drain the oil 89
2. Replace fine filter 89
3. Add oil 89
4. Change gear box oil 90
5. Confirm the oil level 90
M125 90
1. Drain the oil 90
2. Replace fine filter 91
3. Add oil 91
4. Change gear box oil 92
5. Confirm the oil level 92
M350/368/368(ETC) 92
1. Drain the oil 92
2. Replace the fine filter 92
3. Add oil 93
4. Replace the gearbox oil 94
M155 94
1. Drain the engine oil 94
2. Replace the fine filter 95

3. Add engine oil 95
4. Replace the gearbox oil 95
5. Confirm the oil level 96
M310/350/250 Throttle valve body 96
1. Do not dismantle the throttle body to clean up carbon deposits 96
2. Remove the stepper motor and clean up carbon deposits 96
3. Remove the throttle valve body assembly to clean up carbon deposits 98
4. M310 Disassemble the three-in-one sensor 99
5. M350/368 Disassemble the sensor 99
6. Throttle valve body troubleshooting process 100
M125/155 Throttle valve body 101
1. Do not dismantle the throttle body to clean up carbon deposits 101
2. Remove the stepper motor and clean up carbon deposits 101
3. Remove the throttle valve body assembly to clean up carbon deposits 102
4. Disassemble the sensor 102
5. Throttle valve body troubleshooting process 103
Throttle cable 104
1. Inspection 104
2. Adjust the throttle cable clearance 104
3. Lube door cable 104
4. M368(ETC) 105
Idle speed 105
Check idle speed: 105
Fuel evaporative pollutant control system 106
M310/250 fuel evaporation 106
M125/155/150 fuel evaporation 107
M350 fuel evaporation 108
M368 fuel evaporation 109
M368（ETC） Fuel evaporation 110
Radiator 111
1.Check the coolant 111
M125/310/155/150 111
M350/368/250/368(ETC) 111
2. Add coolant (antifreeze) to the Coolant expansion tank 111
M125/310/155/150 111
M350/368/250/368(ETC) 112
3. Add coolant to the Radiator 112
M310 112
M350/368/250 113
4. Put coolant 113
M310/350/368/250/368(ETC) 113
M125/155/150 113
5. Check whether the fins of the radiator water tank are deformed or the air duct is blocked 113
M310 113
M125/150/155 114
M350/368/250/368(ETC) 114
6. Check all water pipes for leaks; aging. 115
M310 115
M125 115
M350/368/250/368(ETC) 116
M155 117
Fuel pipe 118
1. Check the fuel pipe for leaks with the help of an endoscope with LED light 118
2. Replace high pressure oil pipe 118
3. Fuel pump 119
3.1 Use oil pressure gauge to measure fuel pressure 119
3.2 Simple test of fuel pump 120
4. Treatment of abnormal fuel pressure 120
Braking System 120
M310 Braking system component diagram: 121
M125 Braking system component diagram: 121

M350 Braking system component diagram: 122
M125 (2024) Braking system component diagram: 122
M155 Braking system component diagram: 123
M368 Braking system component diagram: 123
M150 Braking system component diagram(without ABS): 124
M250 Braking system component diagram: 124
M368(ETC) Braking system component diagram: 125
1. Check the brake components 126
2. Check the front and rear brake switches 127
2.1 Check the brake switch 127
2.2 Replace the brake switch 127
3. Lubricate the movable parts of the brake handle 127
3.1 Lubricate the front brake handle. 127
3.2 Lubricating the rear brake handle 128
3.3 Replacing the brake handle 128
4. Adjust the brake handle 128
5. Replace the brake pads 128
5.1 Replace the front brake pads 129
M125/310/155 129
M350/368/250/368(ETC) 129
5.2 Replace the rear brake pads 130
5.3 Abnormal sound of brake pads 130
6. Replace the brake disc 131
6.1 Replacing the front brake disc 132
6.2 Replacing the rear brake disc 132
Brake hose 133
Brake fluid 133
1. Add brake fluid to the main pumps of the front and rear disc brakes 133
2. Replace the brake fluid 134
2.1 Replace the front brake brake fluid. 134
2.2 Replace the rear brake fluid 135
3. Brake system exhaust 135
Tire 135
1. Check the tires 135
2. Replace tires 136
Steering mechanism 136
1. Check the steering mechanism 136
2. Adjust the steering mechanism 136
M125/310/155 136
M350/368/250/M368(ETC) 137
3. Maintain steering bearings 137
4. Malfunction 137
Front fork 137
1. Check the appearance 138
2. Check the shock absorption performance 138
3. Remove the front shock absorption 138
4. Correct the front fork tube 138
5. Troubleshooting 139
Rear shock absorption 139
1. Check 139
2. Adjust the preload 139
2.1 Adjust the right rear shock absorption 139
M125/310/155 139
M350/368/250/368(ETC) 140
2.2 Adjust the left rear shock absorption 140
2.2.1 M310 140
2.2.2 M125/155 140
2.2.3 M350/368/250/368(ETC) 140
3. Replace the shock absorption 140
Bolts and nuts for body and engine installation 141
1. Check the fasteners for the critical parts 141

2. Check engine fasteners 141
Side bracket 143
1. Check 143
2. Lubrication 143
Main bracket 144
1. Check 144
2. Lubrication 144
3. Install the main bracket 144
4. Replace the return spring post of the main support 144
Sound, light, and electrical device Inspection 145
1. Check 145
M125/310 charging 146
M350/155/368/150/250/368(ETC) charging 146
2. Headlight height adjustment 146
3.Fuse box 147
4. Troubleshooting 149
4.1 Right hand switch 149
M125/150/310/350/250/368 149
M368(ETC) 149
4.2 Right hand handle vice switch 150
M125/150/310/350/250/368 150
4.3 M125/150/310/350/250/368 Left hand handle auxiliary switch 151
4.4 Horn 151
4.5 Left hand switch 152
M125/150/310/350/250/368 152
M368(ETC) 153
4.6 Light 154
4.7 Windshield failure 154
M125/150/310/350 154
4.8 M368 ECT Electronic throttle grip rubber sleeve 155
Throttle signal fault 155
Sticking throttle grip 155

3. EFI system 156
Know Before Service 156
Error code 157
1. M310 Read the fault code through the meter 157
2. Read the fault code through the diagnostic tool 157
M125/310/155/150 157
M350/368/250/368(ETC) 157
3. Error code 158
M125/155/250/310/350/368 158
M368（ETC） 159
4. Clear fault code 160
4.1 M310 manually clear 160
4.2 Use the diagnostic tool to clear 160
EFI parts layout 161
Fault diagnosis and elimination of EFI parts 162
1. Dump switch 162
2. OBD port 162
3. Fuel pump 163
4. Carbon canister solenoid valve 163
5. Relay（KH-1A4T-R/normally open） 163
6. Fuel injector 164
7. Ignition coils 165
M125/310/155/250 165
M350/368/368(ETC) 165
Troubleshooting of ZT350 Ignition Coil Body Fault 166
Troubleshooting of EFI High Voltage Wire Faults 166
8. Throttle valve body 168
8.1 Common failure phenomena 168

8.2 Disassembly 168
8.3Troubleshooting process 168
Mechanical throttle body 168
Electronic Throttle Body 168
8.4 Sensor 169
M310 Three-in-one sensor 169
M125/350/368/250/150/155 sensor 169
External intake air pressure sensor of M368 (ETC) 169
9. Water and oil shared sensor 170
10. Oxygen Sensor 171
10.1 Check 171
10.2 Replace 171
M310 171
M125 172
M350/368/250 172
M155 173
11. ECU 173
M310/350/155/250 173
M125/155 173
M368(ETC) 173
12. Crankshaft position sensor 174
13. Starting relay (M155) 174
14. Relay (G8HN-1C4T-RJ) (M155) 175
15. Air Filter Intake Air Temperature Sensor 176
The engine cannot start and there is no sign of fault diagnosis process 177
The engine cannot be started and there is a car symptom fault diagnosis process 178
Poor acceleration 178
High idling speed of hot car 179
Unsteady idle speed of cooling car 179
Unsteady idling, easy to cutoff 180
Analysis flow chart of EFI failure indicator light always on 181
Electrical schematic diagram of EFI system 182

4. Ignition system 183
Know Before Service 183
Troubleshooting 184
Ignition system layout 185
Electrical schematic diagram of ignition system 186
Ignition system inspection 188
Ignition coils 188

5. Starting system 189
Know Before Service 189
Troubleshooting 189
1. Starting relay 189
2. Starter motor 190
3. The starter motor runs slowly 190
4. The starter motor is working normally, but the engine cannot be started 190
Ignition system layout 190
Starting system electrical schematic diagram 191
M310/350/125/150/368/250/368(ETC) 191
M155 192
Starter motor 193
1. Remove the starter motor 193
2. Disassemble the starter motor 193
Examination 195
Starter motor front cover： 195
Motor back cover： 195
Denki： 195
Check the starting relay 195
1. Operation check 195
2. Check the relay coil 195

2.1 Input line 195
2.2 Ground wire 195
3. Check the starting relay 195
4. Disassembly and assembly of the starting relay 195
M155 start relay 196
1. Starting relay 196
2. Start-stop controller 196

6. Fuel supply system 197
Know Before Service 197
Fuel tank removal 198
1. Disassemble the fuel tank assembly 198
2. Disassemble the fuel pump 199
4. Remove the external parts of the fuel tank assembly. 199
Examination 200
1. Fuel pressure test 200
2. Fuel pump inspection 200
3. Oil level sensor 200

7. Cooling system 201
Know Before Service 201
Troubleshooting 201
1. The engine temperature is too high: 201
2. The engine temperature is too low: 201
3. Coolant leakage 201
Coolant system distribution map 202
M310 202
M125 202
M350/368/250 203
M155/150 204
M368(ETC) 205
Coolant flow diagram 206
M310 206
M125/155/150 207
M350/368/250 207
M368(ETC) 208
Cooling system disassembly 209
M310 Remove the radiator assembly 209
M310 Coolant system hoop/clamp distribution map 210
M310 Thermostat assembly and small loop 210
M125 Remove the radiator assembly 211
M350/368/250 Remove the radiator assembly 211
M350/368/250/368(ETC) Coolant system hoop/clamp distribution map 212
M350/368/250/368(ETC) Thermostat assembly and small loop 212
M155/150 213
M155/150 Remove radiator assembly 213
M155/150 Thermostat Assembly and Minor Cycle 213
M155/150 Coolant System Clamp/Clamp Distribution 214
Cooling system accessories 214
1. Main water tank 214
M310 214
M350/368/250/368(ETC) 214
2. Attention to the water tank filling port 214
M310 214
2.1 Overall leak check 214
2.2 Check of pressure relief valve 214
M350/368/250 214
3. Auxiliary water tank 215
4. Aluminum inlet pipe and aluminum outlet pipe(M310) 215
5. Small water tank(M310) 215
6. Water and oil shared sensor 215
7. Thermostat 215

7.1 Inspection 215
7.2 Failure phenomenon 215
7.3 Disassembly 215
7.4 Thermostat core inspection 216
8. Water pipe 216
9. Check the water pump cover assembly(M310) 216

8. Braking system 217
Know Before Service 217
Trouble shooting 218
Soft feeling from brake lever 218
Hard feeling from brake lever 218
Disassemble the disc brake main pump and calipers 218
Disassemble the front disc brake main pump 218
Disassemble the rear disc brake main pump 219
Disassemble the front disc brake caliper 219
M125/310/155/150 219
M350/368/250/368(ETC) 219
Disassemble the rear disc brake caliper 220
Brake hose and wheel speed sensor 221
Check the gap between the wheel speed sensor and the induction ring gear 221
Remove the brake hose and wheel speed sensor 221
Release brake fluid 221
FMC-HU and RMC-HU 222
FC-HU and wheel speed sensor (front wheel) 222
RC-HU and wheel speed sensor (rear wheel) 222
ABS system layout 224
ABS hydraulic control unit 224
Disassemble 224
ABS troubleshooting 226
M310 Troubleshooting process with portable ABS diagnostic scanner 227

9. Battery/charging system 228
Know Before Service 228
Troubleshooting 229
Charging system layout diagram 230
Electrical schematic diagram 230
M310/350/368/125/150/250/368(ETC) 230
M155 231
Battery disassembly 231
1. Disassembly 231
2. Check 231
3. Charging 232
Charging system check 232
1. Leakage test 232
2. Check the charging voltage 232
3. Inspection of magneto stator charging coil 232
M125/310/350/368/150/250/368(ETC) remove the rectifier 232

10. Front fork assembly 234
Know Before Service 234
Exploded view of front fork components: 235
M125/310 Directional exploded view 235
M350/368/250 Directional exploded view 236
M125(2024)/155/150 237
M368(ETC) 238
Front fork exploded view 239
M125/310/155/150 239
M350/368/250 240
M368(ETC) 241
Exploded view of lower link board 242
M125/310 242

M125 2024 version-old model 243
M125 2024 version-new model/155/150 244
M350/368/250 245
M368(ETC) 246
Change the direction of the handle 247
1. Remove the direction of the handle 247
2. Remove the components 247
M125/150/155/250/310/350/368 247
M368(ETC) 248
3. Installation of the direction component 248
M125/150/155/250/310/350/368 248
M368(ETC) 249
4. Installation of the direction handle cover 249
Replace the front wheel 250
1. Remove the front wheel assembly 250
2. Install the front wheel assembly 250
Front wheel assembly exploded view： 251
M310 251
M125/155/150 251
M350/250 252
M368 252
M368(ETC) 253
Inspection and maintenance of front wheel assembly 254
1. Disc brake 254
1.1 The service life of the disc brake disc 254
1.2 Disc brake Replacement method 254
2. Front wheel oil seals and bearings 254
2.1 Service life of front wheel oil seals and bearings 254
2.2 Replacement method of front wheel oil seal and bearing 254
3. Front wheel rims and tires 254
3.1 The service life of the front wheel rim and tire 254
3.2 How to replace the front wheel rim and tire 254
3.3 Dynamic balance 255
M125/310/155/150 replacement of the front shock absorber 255
1. Disassemble the front wheel and front fender assembly 255
2. Remove the left and right front shock absorbers 255
3. Reinstall the shock absorber, front fender, front wheel and other components 256
M350/368/250/368(ETC) replacement of the front shock absorber 256
1. Disassemble the front wheel and front fender assembly 256
M350/368/250 256
M368(ETC) 257
2. Remove the left and right front shock absorbers 257
3. Reinstall the shock absorber, front fender, front wheel and other components 257
M125/310/155/150 replace the lower link board 258
1. Disassemble parts ahead of time 258
2. Remove the faucet lock 258
3. Removing the direction pad 258
4. Remove the lower link board assembly 259
5. Install the lower link board assembly 259
6. Install other disassembly components 260
M350/368/250/338(ETC) replace the lower link board 260
11. Disassemble the engine of the vehicle 261
1. Disassemble the storage box 261
2. Remove the cover 261
3. Put the coolant and pull out the connection plug 262
M125/310/350/368/250/338(ETC) 262
M155/150 264
4. Disassemble the engine 265
5. Install the engine 266

12. Disassembly and assembly of vehicle covering parts 268
Disassembly and assembly of vehicle panel 269
M310/350/155/150/125/250 Windshield removal 269
M310/350/155/150/125/250 Removal of the front sun visor 269
M310/350/155/150/125/250 Removal of the front cover 270
M368 Windshield removal 270
M368 front cover plate removal 270
Removal of the front panel 270
Disassembly of headlights 271
Removal of front turn signal 271
Disassembly of the of the Speedometer panel 271
Removal of the front left and right panels 272
Removal of the front part of vent 272
M310/350/155/125/250 Removal of the windshield base 272
M368/150 Removal of the windshield base 273
Removal of the left and right decorative covers of the front storage box 274
Disassembly of the left &right side cover 275
Disassembly of the foot pedals and trim cover 275
Removal of the surrounding middle part 275
Disassembly of the surrounding bottom 276
Removal of the cooling fan air guide plate 276
Disassembly of the cushion 276
Disassembly of the storage box 277
Disassembly of the rear hand rest 277
Disassembly of the left and right tail cover 277
Disassembly of tail light 278
Disassembly of rear fender 278
Disassembly of the left, right fuel tank cover 280
Disassembly the middle cover of the fuel tank 280
Disassembly the left and right storage boxes 281
Disassembly the front storage box panel 282
M368 tire pressure main engine 284

1. Vehicle information

Know Before Service

1. Use good quality tools, or special tools and fixtures designed by our company. The use of inferior tools may cause damage to parts, peeling of plating, improper assembly, etc.
2. The O-rings, paper gaskets, copper gaskets, and component sealing rings used for sealing must be replaced before assembling.
3. Fasteners with torque requirements need to use a torque wrench to check the torque; if the torque is not required, refer to the general torque value recommended by general fasteners.
4. Clean up before assembly; after assembly, check whether the assembly is correct and in place.
5. The vehicle should be parked balanced and pay attention to safety during disassembly and assembly. Including but not limited to the use of electric tools, hand tools, pneumatic tools, hydraulic tools, handling; prevent contact with skin, eyes, burns, etc.
6. The replaced oils, liquids, batteries, etc. must be recycled and handed over to qualified institutions for disposal; it is forbidden to dump them at will to pollute the environment or water sources.
7. Swallowing or inhaling coolant, brake fluid, etc. will cause certain harm to the human body. Any exposed skin such as hands and face should be cleaned thoroughly after each addition. If swallowed by mistake, immediately contact the poison control center or hospital; if inhaled, please immediately go to a ventilated environment. If it accidentally splashes into the eyes, immediately rinse the eyes with a large amount of running water and seek medical advice or consultation in time. Keep away from children and pets.
8 M310 and M125 vehicles produced before mid-August 2022 have the structure of M6×16 bolts + flanging bushing + flanging bushing buffer rubber, which can be replaced by M6×14 shoulder socket head cap bolts. Similar places in subsequent chapters of this manual will not be repeated.

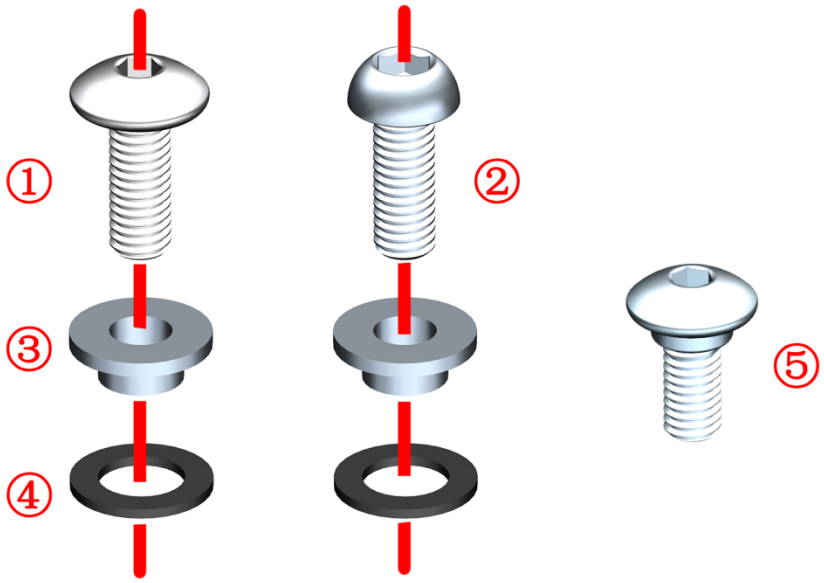

①:1251100-102000 非标螺栓M6×16（304不锈钢）
Non-standard bolt M6×16 (304 stainless steel)
②:1251100-120093 非标螺栓M6×16（环保彩）
Non-standard bolts M6×16 (environmental color)
③:1274100-057095 翻边衬套φ6.2×φ8.4×3.5＋φ14×1.5
Flanging bushing ϕ6.2×ϕ8.4×3.5＋ϕ14×1.5
④:1244100-052000 翻边衬套缓冲胶（φ8.5×φ14×1）
Buffer rubber of flanging bushing (ϕ8.5×ϕ14×1)
⑤:1251100-328000 内六角轴肩螺丝 M6×14+8.5×3 SUS302
Hexagon socket head screw M6×14+8.5×3 SUS302

Only part of the basic requirements for matters needing attention, prevention of accidental injury, etc. can be listed; it is not possible to list all situations in detail. Be vigilant during disassembly and assembly to prevent accidents.

Body label

① The vehicle identification code VIN can be seen after opening the seat cushion, and the VIN code is engraved on the cross tube at the rear of the frame.
② The muffler code is on the inner side above the muffler.
③ The nameplate is above the radiator.
④ PKE, OBD interface and water tank filling port position are pasted on the right storage box cover.
⑤ The engine identification code is engraved on the left crankcase.
⑥ The storage box warning label is pasted on the front of the storage box.
Remarks: Different rows of nameplate, muffler code and warning paste content is different.The figure below is illustrated by M310.

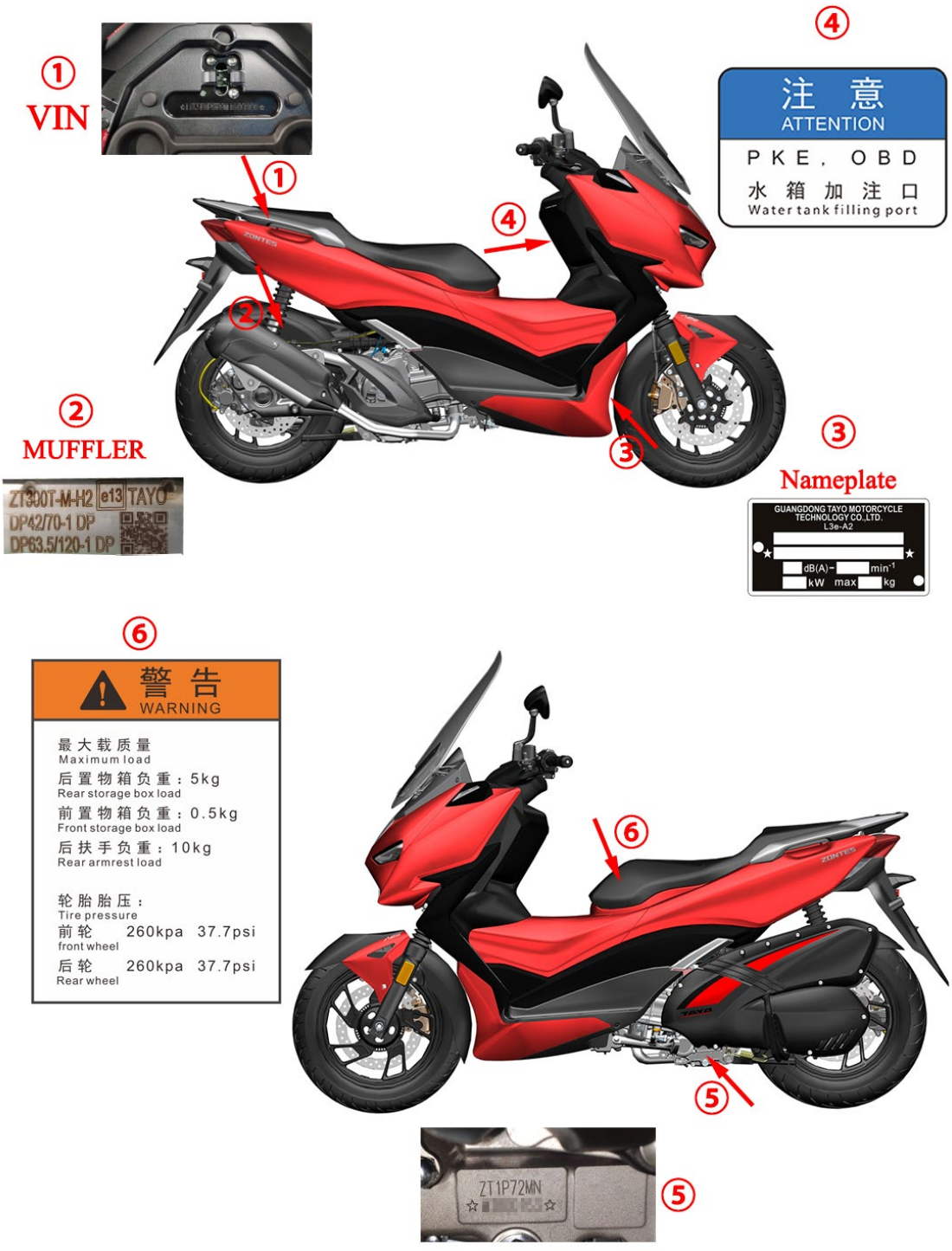

M310 Technical specification

Item		Specification	
Vehicle	Front tire specification	110/80－14 CM－SC01 59S	
	Rear tire specification	140/70－14 CM－SC01 68S	
	Front rim specification	MT:2.5×14	
	Rear rim specification	MT:3.75×14	
	Brake fluid	DOT4 0.215L（0.06 US gal,0.05 lmp gal）	
	Oil consumption	Replace fine filter：	1.75L（0.46 US gal,0.39 lmp gal）
		Without replacing the fine filter：	1.7L（0.45 US gal,0.37 lmp gal）
	Gearbox oil consumption	0.2L（0.05 US gal,0.04 lmp gal）	
Engine	Fuel oil	95 and above	
	Idle speed (r/min)	1600±100	
Spark plug	Spark plug model	NGK LMAR8A－9	
	Gap	0.8～0.9mm(0.031～0.035 in)	
	Resistance (kΩ)	3～7.5	
Cooling system	Total amount of coolant	1.64L（0.43 US gal,0.36 lmp gal）	
	Thermostat opening temperature	80～84℃(176～183.2F)	
	Thermostat fully open temperature	95℃(203F)	
	Thermostat opening stroke	≥3.5mm (0.13 in)	
	Coolant type	Ethylene glycol + distilled water	

Front wheel/steering system

Item		Standard	Limit
Tread depth		-	≥1.6mm (0.063 in)
Normal temperature standard tire pressure		260kPa (2.7 kgf/cm^2,37.7 psi)	-
Front wheel rim runout	Radial	-	1.5mm (0.006 in)
	Axial	-	1.5mm (0.006 in)

Rear wheel/suspension system

Item		Standard	Limit
Tread depth		-	≥1.6mm (0.063 in)
Normal temperature standard tire pressure		260kPa (2.7 kgf/cm^2,37.7 psi)	-
Rear wheel rim runout	Radial	-	1.5mm (0.006 in)
	Axial	-	1.5mm (0.006 in)
V belt 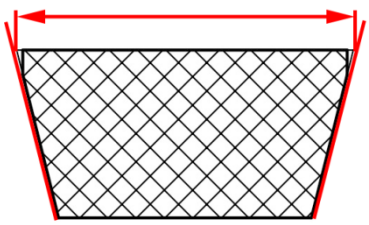	Top width（1）	26.4mm(1.039 in)	≥25.4mm(1 in)
Standard position of rear shock absorber and preload regulator		Third gear	-

Brake system

Item		Standard	Limit
Front brake disc	Brake fluid	DOT4	-
	Brake pad use limit	-	Trough bottom
	Brake disc thickness	≥4.0mm(0.16 in)	＜4.0mm(0.16 in)
Rear brake disc	Brake fluid	DOT4	-
	Brake pad use limit	-	Trough bottom
	Brake disc thickness	≥4.0mm(0.16 in)	＜4.0mm(0.16 in)

Battery/charging system

Item			Standard
Battery	Type		YTX12-BS
	Capacity		12Ah
	Battery self-discharge current		1.1mA average
	Voltage	Full	13.1～13.3V
		Charging voltage required for unloaded bike	≤12.8V
		Charging voltage required for loading	≤12V
	Constant voltage charging mode	Constant voltage range	14.4～14.8V
		Initial charging current	0.1～0.2 times the battery capacity
		Charging time	6～24 hours
	Constant current charging mode	Maximum charging current	0.1 times the battery capacity
		Charging time	5～8 hours
		Charging current × charging time must be controlled within the current range of 0.5 to 0.8 times the battery capacity	

M125/M125(2024) Technical specification

Item		Specification	
Vehicle	Front tire specification	100/80－14 CM576 48P	
	Rear tire specification	120/70－14 CM577 61P	
	Front rim specification	MT:2.5×14	
	Rear rim specification	MT:3.5×14	
	Brake fluid	DOT4 0.215L（0.06 US gal,0.05 lmp gal）	
	Oil consumption	Replace fine filter：	0.95L（0.25 US gal,0.21 lmp gal）
		Without replacing the fine filter：	0.9L（0.24 US gal,0.2 lmp gal）
	Gearbox oil consumption	0.16L（0.04 US gal,0.04 lmp gal）	
Engine	Idle speed (r/min)	1500±100	
	Fuel oil	95 and above	
Spark plug	Spark plug model	TORCH CR8EI	
	Gap	0.7～0.9mm(0.028～0.035 in)	
	Resistance (kΩ)	3～7.5	
Cooling system	Total amount of coolant	0.9L（0.24 US gal,0.2 lmp gal）	
	Thermostat opening temperature	80～84℃(176～183.2F)	
	Thermostat fully open temperature	95℃(203F)	
	Thermostat opening stroke	≥3.5mm (0.13 in)	
	Coolant type	Ethylene glycol + distilled water	

Front wheel/steering system

Item		Standard	Limit
Tread depth		-	≥1.6mm (0.063 in)
Normal temperature standard tire pressure		220kPa (2.24 kgf/cm^2, 32 psi)	-
Front wheel rim runout	Radial	-	1.5mm (0.006 in)
	Axial	-	1.5mm (0.006 in)

Rear wheel/suspension system

Item		Standard	Limit
Tread depth		-	≥1.6mm (0.063 in)
Normal temperature standard tire pressure		270kPa (2.75 kgf/cm^2,39 psi)	-
Rear wheel rim runout	Radial	-	1.5mm (0.006 in)
	Axial	-	1.5mm (0.006 in)
V belt 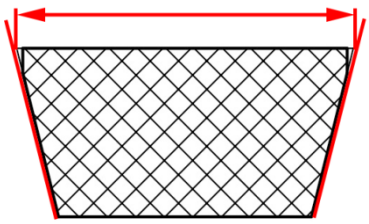	Top width	25.3mm (0.996 in)	≥24.3mm (0.957 in)
Standard position of rear shock absorber and preload regulator		Third gear	-

Brake system

Item		Standard	Limit
Front brake disc	Brake fluid	DOT4	-
	Brake pad use limit	-	Trough bottom
	Brake disc thickness	≥4.0mm (0.16 in)	＜4.0mm(0.16 in)
Rear brake disc	Brake fluid	DOT4	-
	Brake pad use limit	-	Trough bottom
	Brake disc thickness	≥4.0mm (0.16 in)	＜4.0mm(0.16 in)

Battery/charging system

Item			Standard
Battery	Type		6-FM-7L
	Capacity		7Ah
	Battery self-discharge current		1.1mA average
	Voltage	Full	13.1～13.3V
		Charging voltage required for unloaded bike	≤12.8V
		Charging voltage required for loading	≤12V
	Constant voltage charging mode	Constant voltage range	14.4～14.8V
		Initial charging current	0.1～0.2 times the battery capacity
		Charging time	6～24 hours
	Constant current charging mode	Maximum charging current	0.1 times the battery capacity
		Charging time	5～8 hours
		Charging current × charging time must be controlled within the current range of 0.5 to 0.8 times the battery capacity	

M350 Technical specification

Item		Specification	
Vehicle	Front tire specification	120/70 - 15 CM576 56S	
	Rear tire specification	140/70 - 14 CM577 68S	
	Front rim specification	MT:3.5×15	
	Rear rim specification	MT:3.75×14	
	Brake fluid	DOT4 0.215L（0.06 US gal,0.05 lmp gal）	
	Oil consumption	Replace fine filter：	1.75L（0.46 US gal,0.39 lmp gal）
		Without replacing the fine filter：	1.55L（0.41 US gal,0.34 lmp gal）
	Gearbox oil consumption	0.2L（0.05 US gal,0.04 lmp gal）	
Engine	Fuel oil	95 and above	
	Idle speed (r/min)	1600±100	
Spark plug	Spark plug model	NGK LMAR8A—9	
	Gap	0.8～0.9mm(0.031～0.035 in)	
	Resistance (kΩ)	3～7.5	
Cooling system	Total amount of coolant	1.44L（0.38 US gal,0.32 lmp gal）	
	Thermostat opening temperature	80～84℃(176～183.2F)	
	Thermostat fully open temperature	95℃(203F)	
	Thermostat opening stroke	≥3.5mm (0.13 in)	
	Coolant type	Ethylene glycol + distilled water	

Front wheel/steering system

Item		Standard	Limit
Tread depth		-	≥1.6mm (0.063 in)
Normal temperature standard tire pressure		240kPa(2.45 kgf/cm2,34.8 psi)	-
Front wheel rim runout	Radial	-	1.5mm (0.006 in)
	Axial	-	1.5mm (0.006 in)

Rear wheel/suspension system

Item			Standard	Limit
Tread depth			-	≥1.6mm (0.063 in)
Normal temperature standard tire pressure			260kPa (2.7 kgf/cm^2,37.7 psi)	-
Rear wheel rim runout	Radial		-	1.5mm (0.006 in)
	Axial		-	1.5mm (0.006 in)
V belt 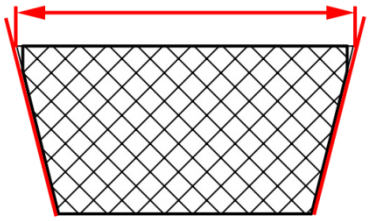		Top width（1）	27.8mm(1.094 in)	≥26.8mm(1.055 in)
Standard position of rear shock absorber and preload regulator			Third gear	-

Brake system

Item		Standard	Limit
Front brake disc	Brake fluid	DOT4	-
	Brake pad use limit	-	Trough bottom
	Brake disc thickness	≥4.5mm(0.18 in)	< 4.5mm(0.18 in)
Rear brake disc	Brake fluid	DOT4	-
	Brake pad use limit	-	Trough bottom
	Brake disc thickness	≥4.0mm(0.16 in)	＜4.0mm(0.16 in)

Battery/charging system

Item			Standard
Battery	Type		YTX12-BS
	Capacity		12Ah
	Battery self-discharge current		1.1mA average
	Voltage	Full	13.1～13.3V
		Charging voltage required for unloaded bike	≤12.8V
		Charging voltage required for loading	≤12V
	Constant voltage charging mode	Constant voltage range	14.4～14.8V
		Initial charging current	0.1～0.2 times the battery capacity
		Charging time	6～24 hours
	Constant current charging mode	Maximum charging current	0.1 times the battery capacity
		Charging time	5～8 hours
		Charging current × charging time must be controlled within the current range of 0.5 to 0.8 times the battery capacity	

M155/150 Technical specification

Item		Specification	
Vehicle	Front tire specification	100/80－14 CM576 48P	
	Rear tire specification	120/70－14 CM577 61P	
	Front rim specification	MT:2.5×14	
	Rear rim specification	MT:3.5×14	
	Brake fluid	DOT4 0.215L （0.06 US gal,0.05 Imp gal）	
	Oil consumption	Replace fine filter：	0.95L（0.25 US gal,0.21 Imp gal）
		Without replacing the fine filter：	0.9L（0.24 US gal,0.2 Imp gal）
	Gearbox oil consumption	0.16L（0.04 US gal,0.04 Imp gal）	
Engine	Idle speed (r/min)	1500±100	
	Fuel oil	95 and above	
Spark plug	Spark plug model	CPR8EA－9	
	Gap	0.8～0.9mm(0.031～0.035 in)	
	Resistance (kΩ)	3～7.5	
Cooling system	Total amount of coolant	0.9L（0.24 US gal,0.2 Imp gal）	
	Thermostat opening temperature	80～84℃(176～183.2F)	
	Thermostat fully open temperature	95℃(203F)	
	Thermostat opening stroke	≥3.5mm (0.13 in)	
	Coolant type	Ethylene glycol + distilled water	

Front wheel/steering system

Item		Standard	Limit
Tread depth		-	≥1.6mm (0.063 in)
Normal temperature standard tire pressure		220kPa (2.24 kgf/cm^2, 32 psi)	-
Front wheel rim runout	Radial	-	1.5mm (0.006 in)
	Axial	-	1.5mm (0.006 in)

Rear wheel/suspension system

Item		Standard	Limit
Tread depth		-	≥1.6mm (0.063 in)
Normal temperature standard tire pressure		270kPa (2.75 kgf/cm^2,39 psi)	-
Rear wheel rim runout	Radial	-	1.5mm (0.006 in)
	Axial	-	1.5mm (0.006 in)
V belt 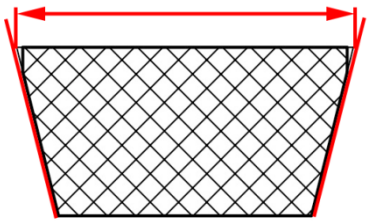	Top width	24.6mm(0.969 in)	≥23.6mm(0.929 in)
Standard position of rear shock absorber and preload regulator		Third gear	-

Brake system

Item		Standard	Limit
Front brake disc	Brake fluid	DOT4	-
	Brake pad use limit	-	Trough bottom
	Brake disc thickness	≥4.0mm (0.16 in)	＜4.0mm(0.16 in)
Rear brake disc	Brake fluid	DOT4	-
	Brake pad use limit	-	Trough bottom
	Brake disc thickness	≥4.0mm (0.16 in)	＜4.0mm(0.16 in)

Battery/charging system

Item			Standard
Battery	Type		YTX12－BS
	Capacity		12Ah
	Battery self-discharge current		1.1mA average
	Voltage	Full	13.1～13.3V
		Charging voltage required for unloaded bike	≤12.8V
		Charging voltage required for loading	≤12V
	Constant voltage charging mode	Constant voltage range	14.4～14.8V
		Initial charging current	0.1～0.2 times the battery capacity
		Charging time	6～24 hours
	Constant current charging mode	Maximum charging current	0.1 times the battery capacity
		Charging time	5～8 hours
		Charging current × charging time must be controlled within the current range of 0.5 to 0.8 times the battery capacity	

M368/M368(ETC) Technical specification

Item		Specification	
Vehicle	Front tire specification	120/70 - 15 CM - SC13 56S	
	Rear tire specification	140/70 - 14 CM - SC13 68S TL E4	
	Front rim specification	MT:3.5×15	
	Rear rim specification	MT:3.75×14	
	Brake fluid	DOT4 0.215L（0.06 US gal,0.05 lmp gal）	
	Oil consumption	Replace fine filter：	1.75L（0.46 US gal,0.39 lmp gal）
		Without replacing the fine filter：	1.55L（0.41 US gal,0.34 lmp gal）
	Gearbox oil consumption	0.2L（0.05 US gal,0.04 lmp gal）	
Engine	Fuel oil	95 and above	
	Idle speed (r/min)	1600±100	
Spark plug	Spark plug model	NGK LMAR8A—9	
	Gap	0.8～0.9mm(0.031～0.035 in)	
	Resistance (kΩ)	3～7.5	
Cooling system	Total amount of coolant	1.48L（0.39 US gal,0.33 lmp gal）	
	Thermostat opening temperature	80～84℃(176～183.2F)	
	Thermostat fully open temperature	95℃(203F)	
	Thermostat opening stroke	≥3.5mm (0.13 in)	
	Coolant type	Ethylene glycol + distilled water	

Front wheel/steering system

Item		Standard	Limit
Tread depth		-	≥1.6mm (0.063 in)
Normal temperature standard tire pressure		240kPa(2.45 kgf/cm2,34.8 psi)	-
Front wheel rim runout	Radial	-	1.5mm (0.006 in)
	Axial	-	1.5mm (0.006 in)

Rear wheel/suspension system

Item		Standard	Limit
Tread depth		-	≥1.6mm (0.063 in)
Normal temperature standard tire pressure		260kPa (2.7 kgf/cm^2,37.7 psi)	-
Rear wheel rim runout	Radial	-	1.5mm (0.006 in)
	Axial	-	1.5mm (0.006 in)
V belt 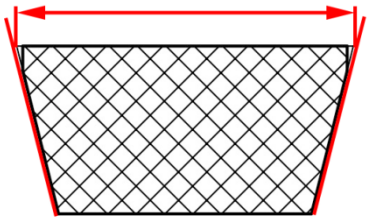	Top width（1）	27.8mm(1.094 in)	≥26.8mm(1.055 in)
Standard position of rear shock absorber and preload regulator		Third gear	-

Brake system

Item		Standard	Limit
Front brake disc	Brake fluid	DOT4	-
	Brake pad use limit	-	Trough bottom
	Brake disc thickness	≥4.5mm(0.18 in)	< 4.5mm(0.18 in)
Rear brake disc	Brake fluid	DOT4	-
	Brake pad use limit	-	Trough bottom
	Brake disc thickness	≥4.0mm(0.16 in)	＜4.0mm(0.16 in)

Battery/charging system

Item			Standard
Battery	Type		YTX12-BS
	Capacity		12Ah
	Battery self-discharge current		1.1mA average
	Voltage	Full	13.1～13.3V
		Charging voltage required for unloaded bike	≤12.8V
		Charging voltage required for loading	≤12V
	Constant voltage charging mode	Constant voltage range	14.4～14.8V
		Initial charging current	0.1～0.2 times the battery capacity
		Charging time	6～24 hours
	Constant current charging mode	Maximum charging current	0.1 times the battery capacity
		Charging time	5～8 hours
		Charging current × charging time must be controlled within the current range of 0.5 to 0.8 times the battery capacity	

M250 Technical specification

Item		Specification	
Vehicle	Front tire specification	120/70－15 CM576 56S	
	Rear tire specification	140/70－14 CM577 68S	
	Front rim specification	MT:3.5×15	
	Rear rim specification	MT:3.75×14	
	Brake fluid	DOT4 0.25L（0.07 US gal,0.06 lmp gal）	
	Oil consumption	Replace fine filter：	1.75L（0.46 US gal,0.39 lmp gal）
		Without replacing the fine filter：	1.7L（0.41 US gal,0.34 lmp gal）
	Gearbox oil consumption	0.2L（0.05 US gal,0.04 lmp gal）	
Engine	Fuel oil	95 and above	
	Idle speed (r/min)	1600±100	
Spark plug	Spark plug model	LMAR8A－9	
	Gap	0.8～0.9mm(0.031～0.035 in)	
	Resistance (kΩ)	3～7.5	
Cooling system	Total amount of coolant	1.34L（0.35 US gal,0.29 lmp gal）	
	Thermostat opening temperature	80～84℃(176～183.2F)	
	Thermostat fully open temperature	95℃(203F)	
	Thermostat opening stroke	≥3.5mm (0.13 in)	
	Coolant type	Ethylene glycol + distilled water	

Front wheel/steering system

Item		Standard	Limit
Tread depth		-	≥1.6mm (0.063 in)
Normal temperature standard tire pressure		240kPa(2.45 kgf/cm^2,34.8 PSI)	-
Front wheel rim runout	Radial	-	1.5mm (0.006 in)
	Axial	-	1.5mm (0.006 in)

Rear wheel/suspension system

Item		Standard	Limit
Tread depth		-	≥1.6mm (0.063 in)
Normal temperature standard tire pressure		260kPa (2.7 kgf/cm^2,37.7 PSI)	-
Rear wheel rim runout	Radial	-	1.5mm (0.006 in)
	Axial	-	1.5mm (0.006 in)
V belt 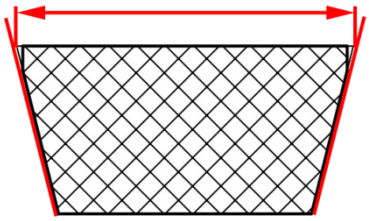	Top width（1）	26.4mm(1.094 in)	≥25.4mm(1.055 in)
Standard position of rear shock absorber and preload regulator		Fourth gear	-

Brake system

Item		Standard	Limit
Front brake disc	Brake fluid	DOT4	-
	Brake pad use limit	-	Trough bottom
	Brake disc thickness	≥5.0mm(0.197 in)	＜4.5mm(0.177in)
Rear brake disc	Brake fluid	DOT4	-
	Brake pad use limit	-	Trough bottom
	Brake disc thickness	≥4.5mm(0.177 in)	＜4.0mm(0.157 in)

Battery/charging system

Item			Standard
Battery	Type		YTX12 - BS
	Capacity		12Ah
	Battery self-discharge current		1.1mA average
	Voltage	Full	13.1～13.3V
		Charging voltage required for unloaded bike	≤12.8V
		Charging voltage required for loading	≤12V
	Constant voltage charging mode	Constant voltage range	14.4～14.8V
		Initial charging current	0.1～0.2 times the battery capacity
		Charging time	6～24 hours
	Constant current charging mode	Maximum charging current	0.1 times the battery capacity
		Charging time	5～8 hours
		Charging current × charging time must be controlled within the current range of 0.5 to 0.8 times the battery capacity	

Lamp/Speedometer/switch description

Item			Specification
Light（LED）	Front headlight	High beam	12V～23W
		Low beam	12V～15W
	Front position light		2.8W
	Front turn signal		1.2W
	Rear turn signal		1W
	License plate light		0.5W
	Brake lights/tail lights		1.3/0.4W
	Storage box atmosphere light		0.2W
Insurance	Main insurance		25A
	ECM		15A
	ABS hydraulic control unit motor		25A
	Hydraulic control unit ECU		10A
	Lights		10A
	Regular power supply		15A
	spare		15A
Water temperature sensor	Room temperature		1.5～4.0 KΩ

Tightening torque

Bolt tightening torque of general tightening part

Intensity level	Grade 4.8-6.8 (mark "4" on the head of the bolt)			Grade 8.8 (mark "7" or "8.8" on the head of the bolt)		
Bolt diameter	Tightening torque range	Standard value	Breaking torque	Tightening torque range	Standard value	Breaking torque
M4	1-2	1.4	/	1.5-3	2.5	/
M5	2-4	2.9	4.5	3-6	4.5	8
M6	4-7	4.9	10	8-12	10	14.5
M8	10-16	12.2	20	18-28	22	34
M10	22-25	24.5	45	40-60	44	76
M12	35-55	43	75	70-100	77	112
M14	50-80	69	123	110-160	124	200
M16	80-130	110	195	170-250	200	300
M18	130-190	150	285	200-280	270	450

Remarks: The connection tightening torque of plastic parts is half of the tightening torque of grade 6.8 bolts

Cable/ pipe/electrical device distribution map

1. Distribution map of lamps and lanterns

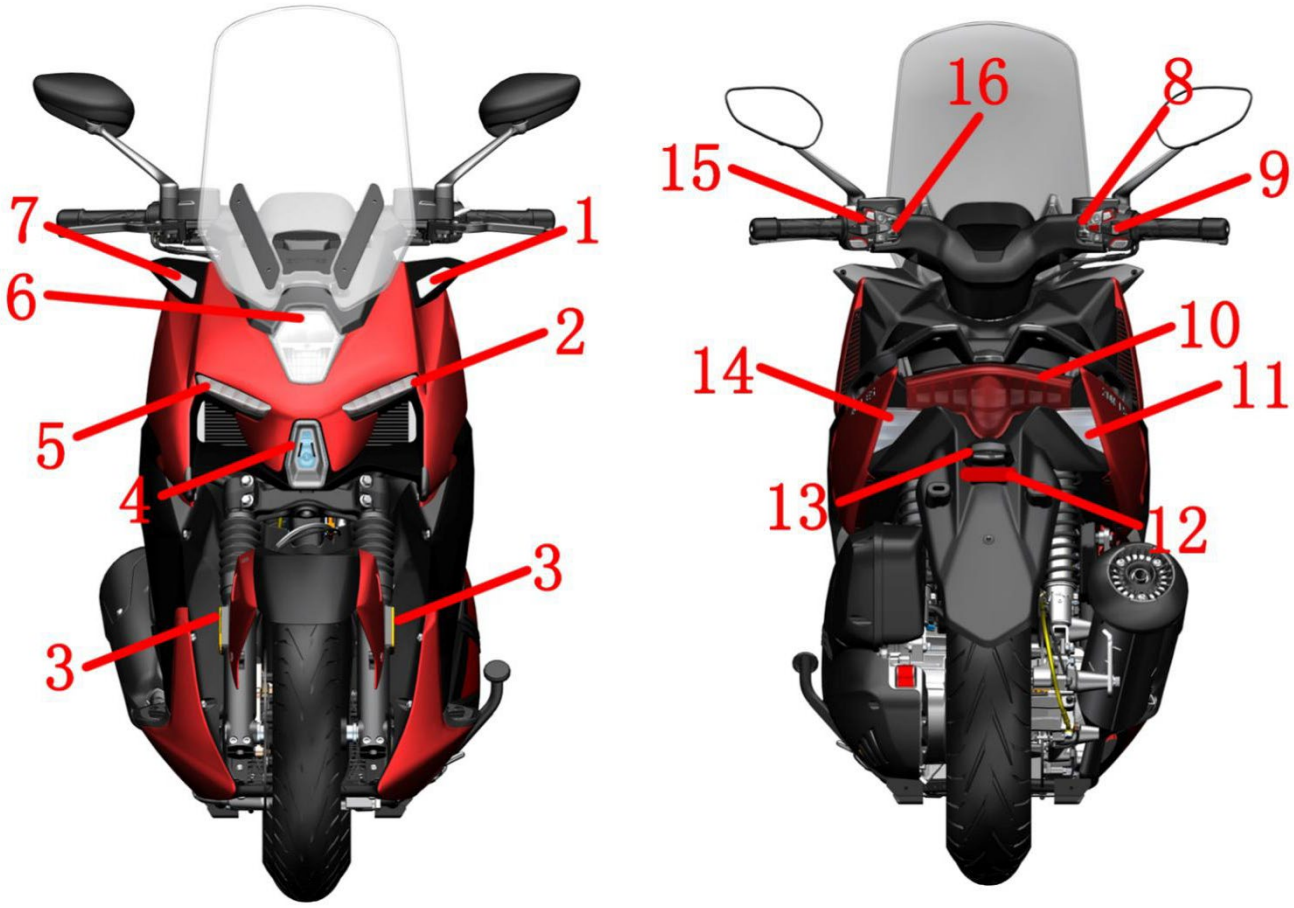

1-Left front turn signal 2-Left daytime running light 3-Side reflector 4-Position light 5-Right daytime running light 6-Headlight 7-Right front turn signal 8-Right-hand handle auxiliary switch 9-Right-hand handle switch 10-Rear tail light/system Moving lamp 11-Rear right turn signal 12-Rear reflector 13-License plate lamp 14-Left rear turn signal 15-Left handle switch 16-Left handle assistant switch

2. Throttle cable

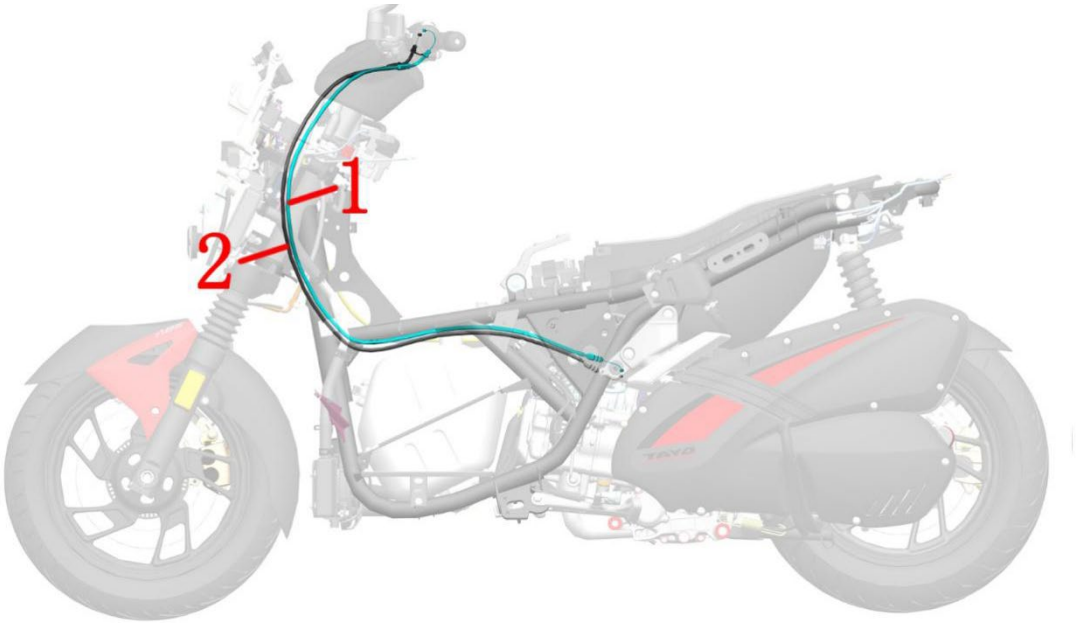

1- Oil return line 2- Fuel line

3. Brake upper pump and brake hose

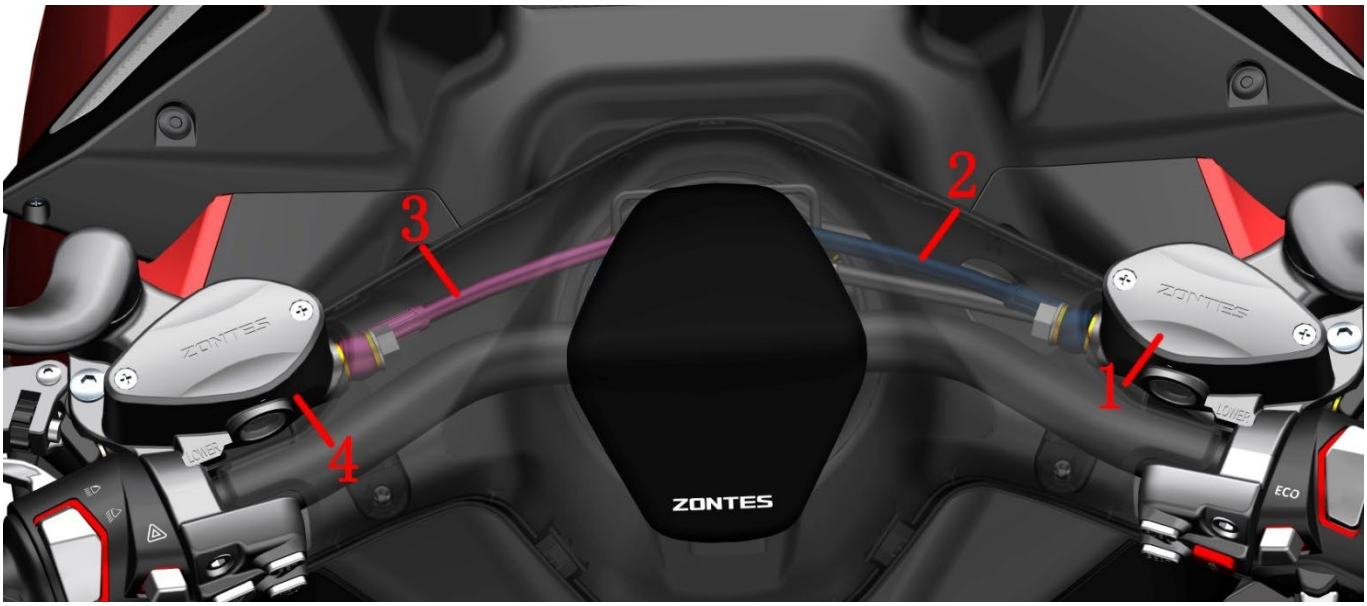

1-Front disc brake main pump 2-FMC-HU brake hose 3-RMC-HU brake hose 4-rear disc brake main pump

4. Calipers, brake hoses and wheel speed sensors

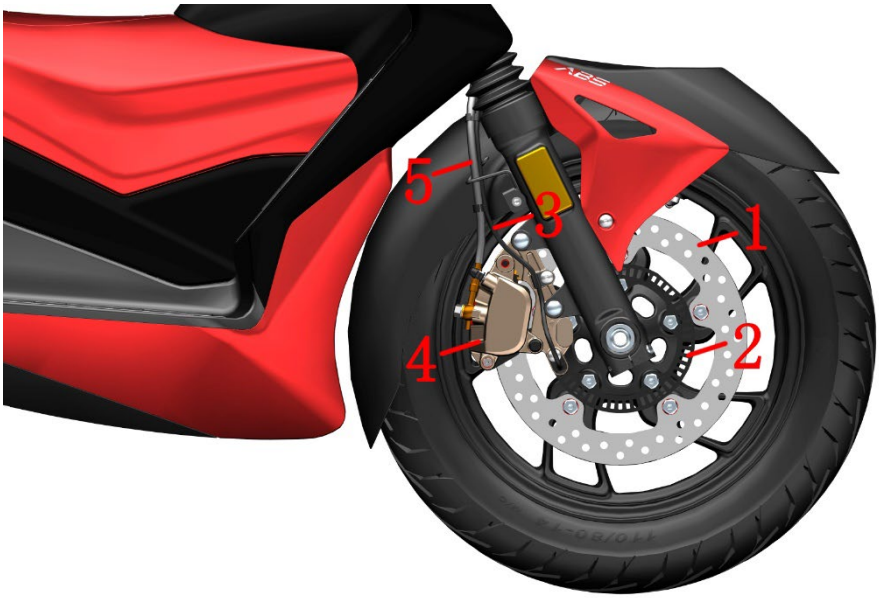

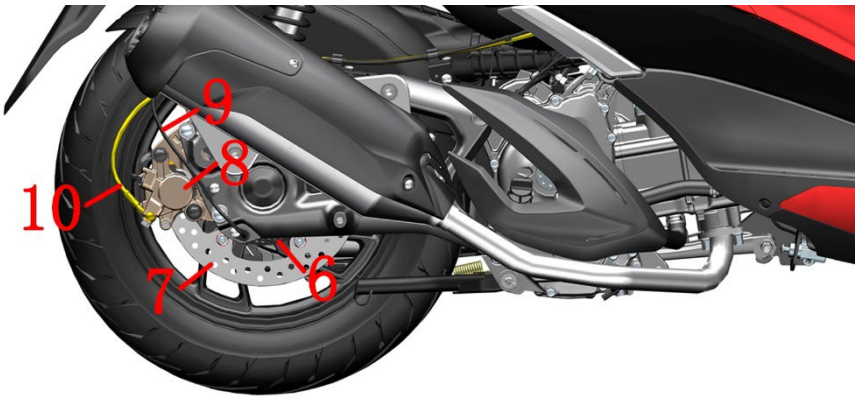

1-brake disc (front) 2- front whell ABS induction ring gear 3-wheel speed sensor (front wheel) 4-front disc brake caliper 5-FC-HU brake hose 6- rear whell ABS induction ring gear 7-brake disc (rear) 8-rear disc brake caliper 9-wheel speed sensor (rear wheel) 10-RC-HU brake hose

5. Distribution map of brake system accessories

5.1 M310

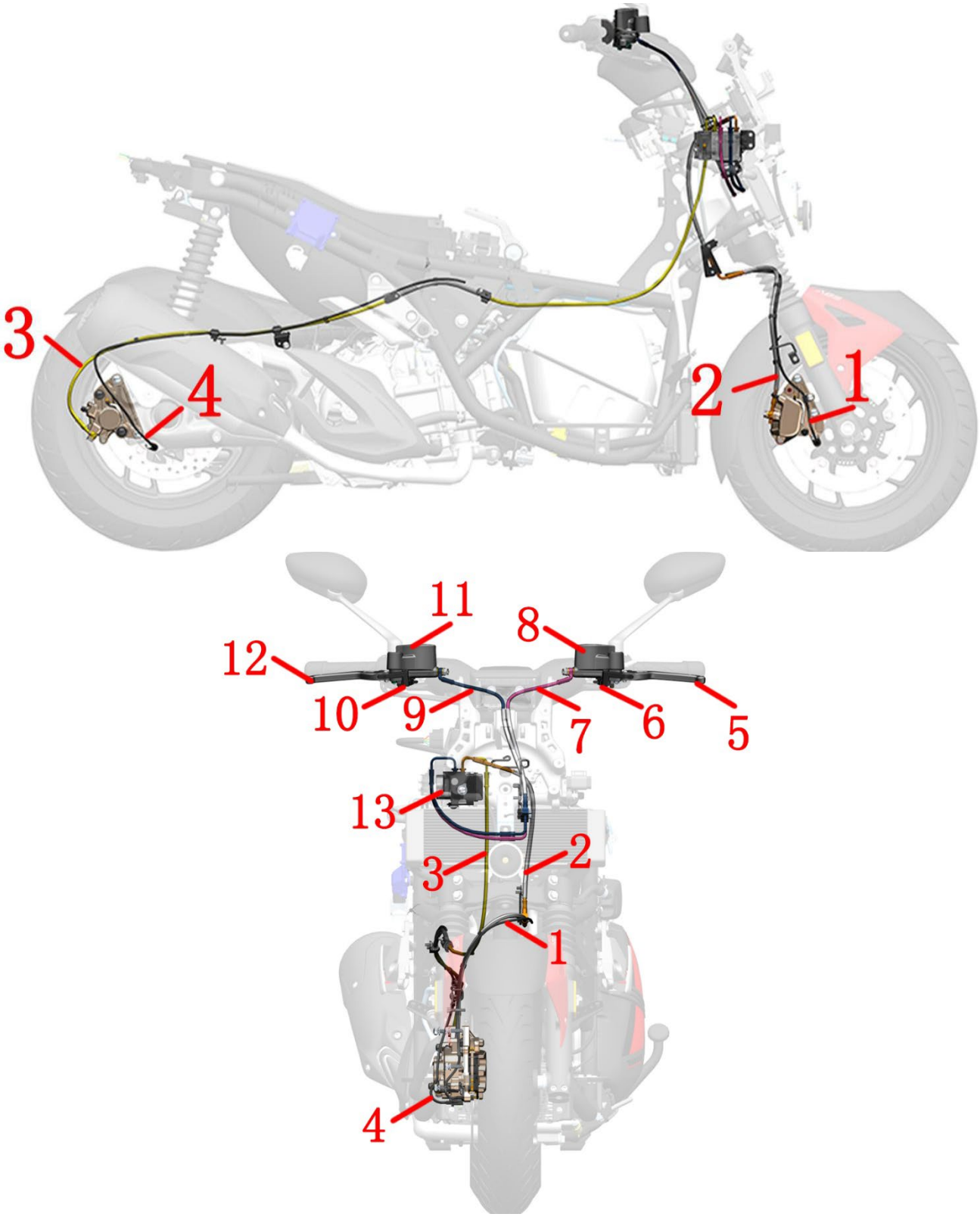

1-wheel speed sensor (front wheel) 2-FC-HU brake hose 3-RC-HU brake hose 4-wheel speed sensor (rear wheel) 5-rear brake lever 6-rear brake switch 7-RMC -HU brake hose 8-rear disc brake main pump 9-FMC-HU brake hose 10-front brake switch 11-front disc brake main pump 12-front brake handle 13-hydraulic control unit

5.2 M125

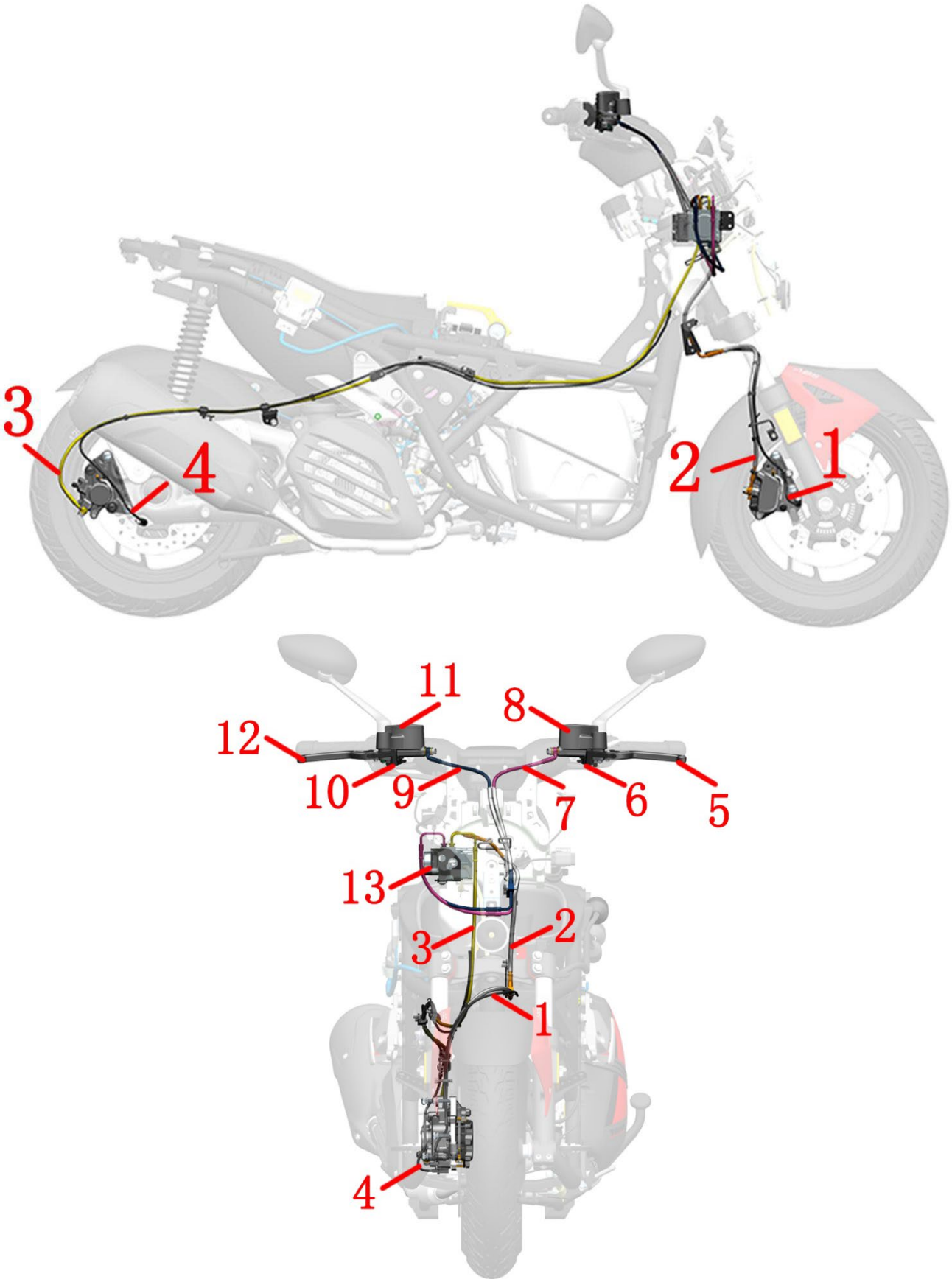

1-wheel speed sensor (front wheel) 2-FC-HU brake hose 3-RC-HU brake hose 4-wheel speed sensor (rear wheel) 5-rear brake lever 6-rear brake switch 7-RMC -HU brake hose 8-rear disc brake main pump 9-FMC-HU brake hose 10-front brake switch 11-front disc brake main pump 12-front brake handle 13-hydraulic control unit

5.3 M350/368

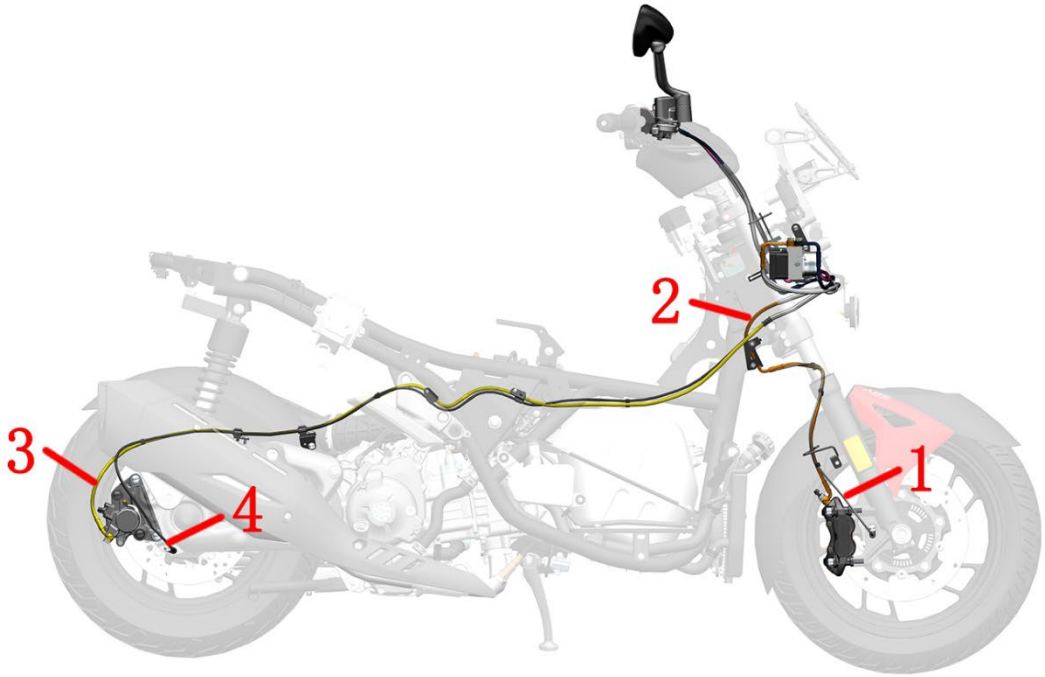

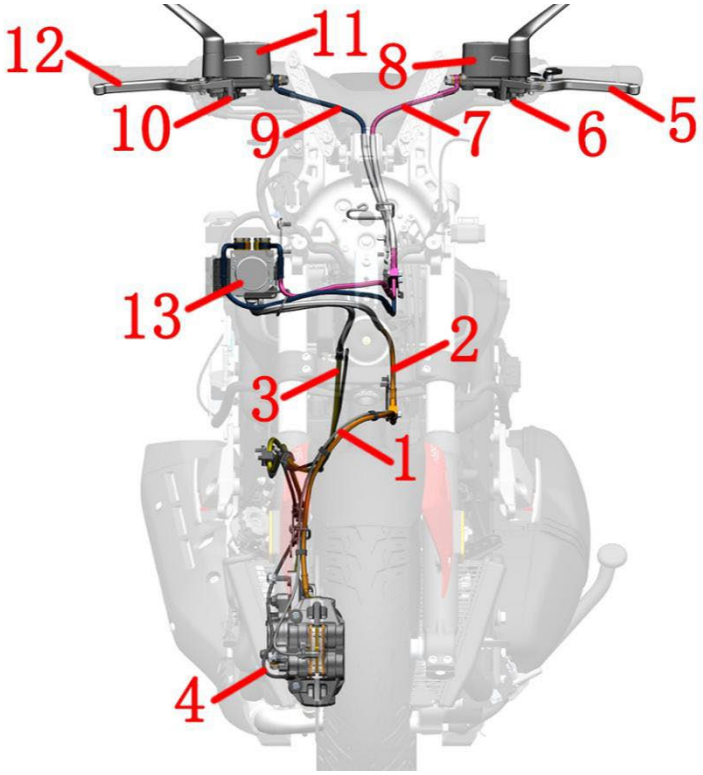

1-wheel speed sensor (front wheel) 2-FC-HU brake hose 3-RC-HU brake hose 4-wheel speed sensor (rear wheel) 5-rear brake lever 6-rear brake switch 7-RMC -HU brake hose 8-rear disc brake main pump 9-FMC-HU brake hose 10-front brake switch 11-front disc brake main pump 12-front brake handle 13-hydraulic control unit

5.4 M155

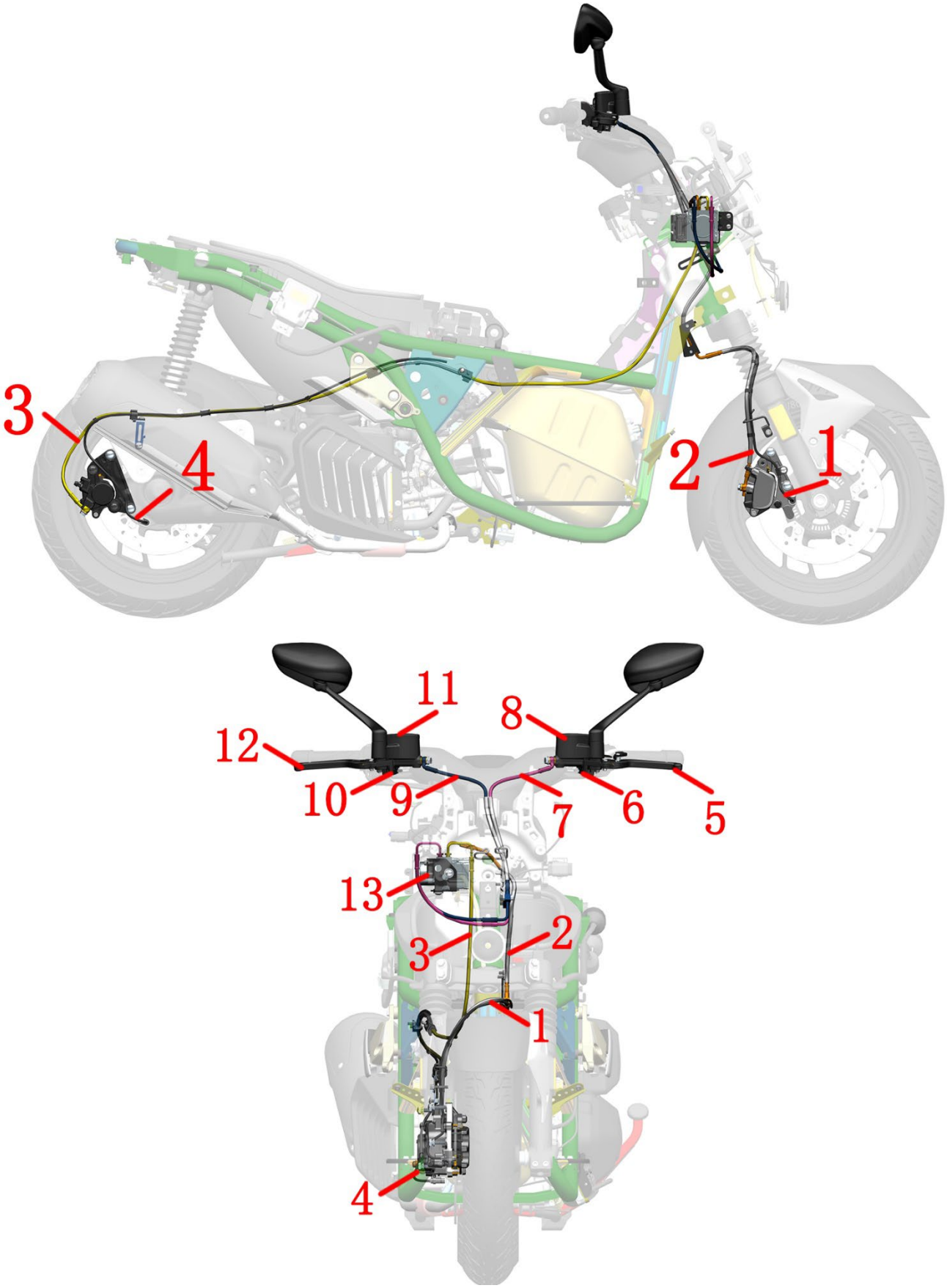

1-wheel speed sensor (front wheel) 2-FC-HU brake hose 3-RC-HU brake hose 4-wheel speed sensor (rear wheel) 5-rear brake lever 6-rear brake switch 7-RMC -HU brake hose 8-rear disc brake main pump 9-FMC-HU brake hose 10-front brake switch 11-front disc brake main pump 12-front brake handle 13-hydraulic control unit

5.5 M250

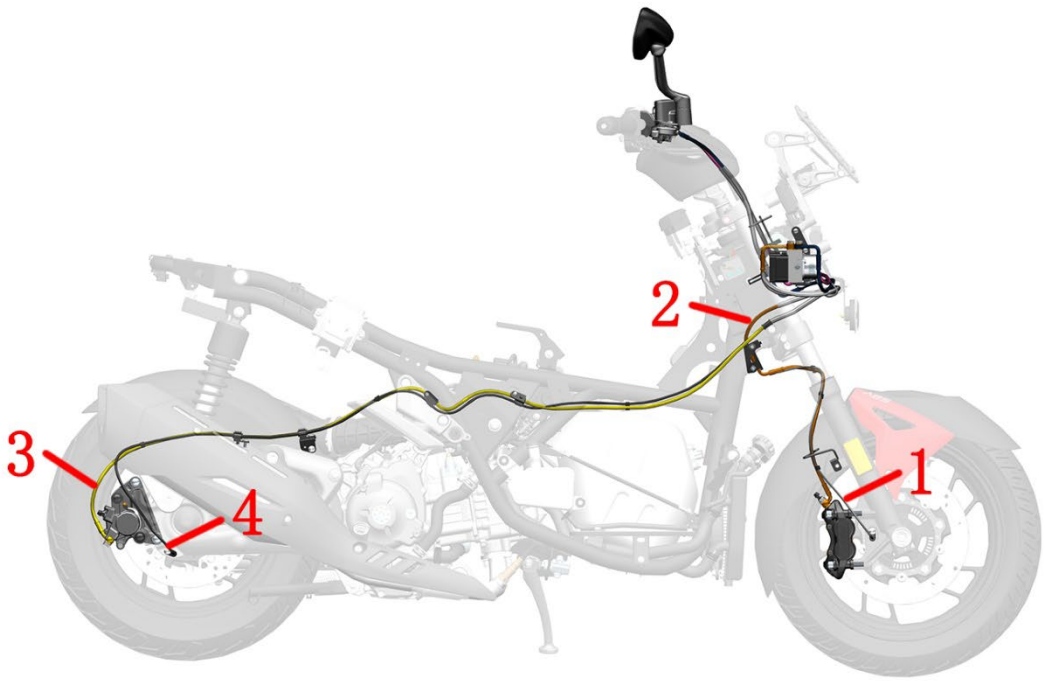

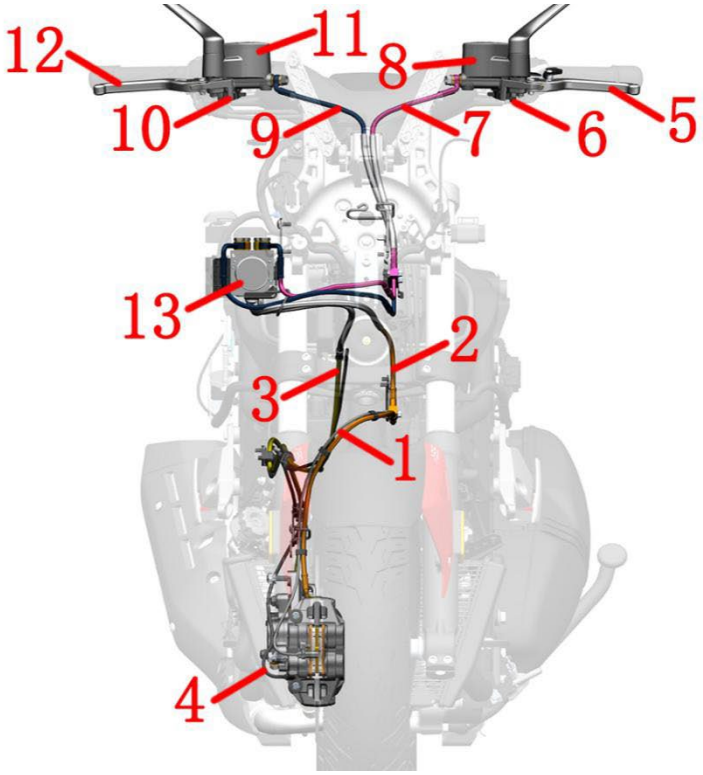

1-wheel speed sensor (front wheel) 2-FC-HU brake hose 3-RC-HU brake hose 4-wheel speed sensor (rear wheel) 5-rear brake lever 6-rear brake switch 7-RMC -HU brake hose 8-rear disc brake main pump 9-FMC-HU brake hose 10-front brake switch 11-front disc brake main pump 12-front brake handle 13-hydraulic control unit

5.6 M368(ETC)

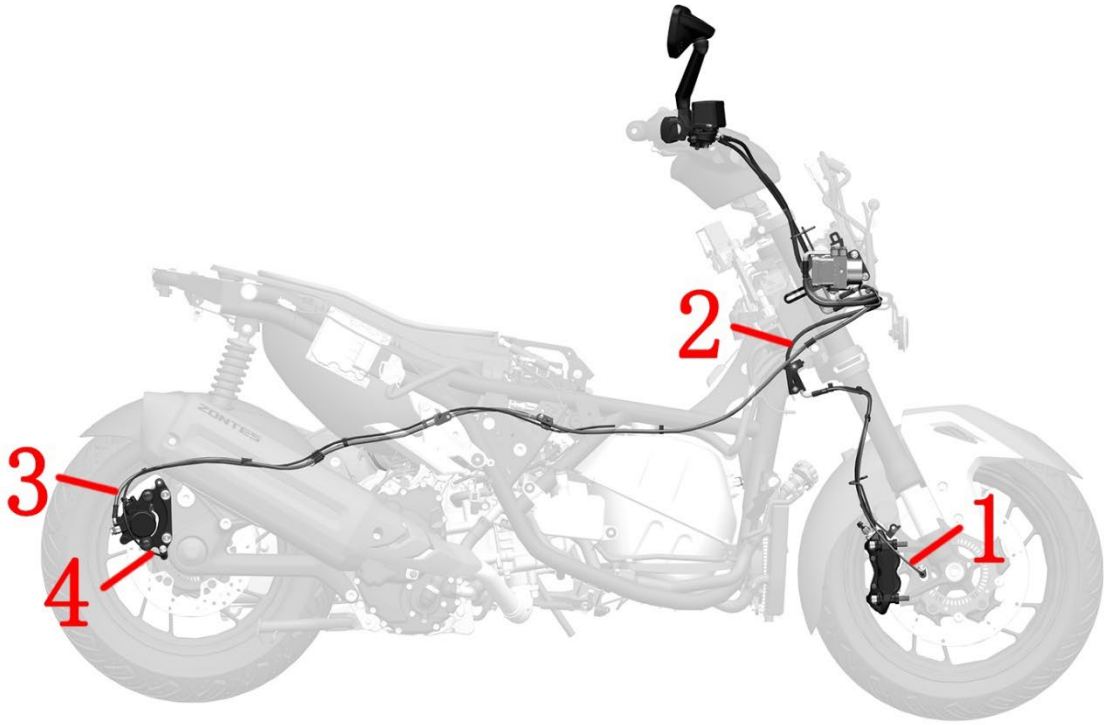

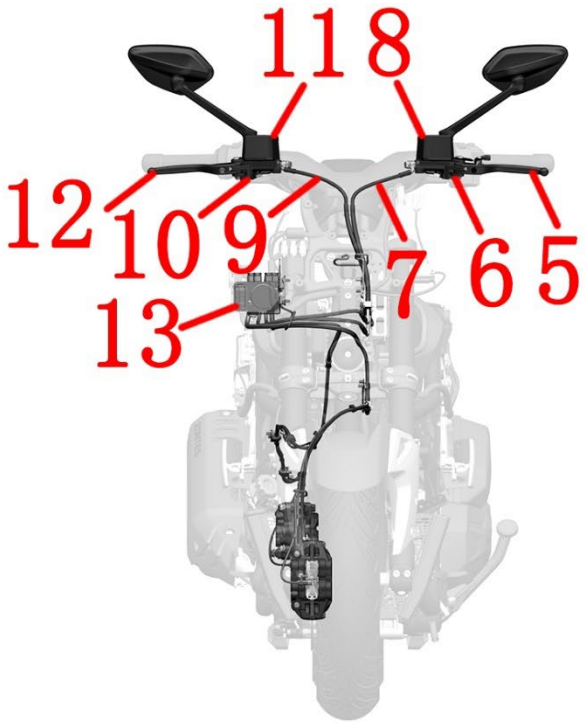

1-wheel speed sensor (front wheel) 2-FC-HU brake hose 3-RC-HU brake hose 4-wheel speed sensor (rear wheel) 5-rear brake lever 6-rear brake switch 7-RMC -HU brake hose 8-rear disc brake main pump 9-FMC-HU brake hose 10-front brake switch 11-front disc brake main pump 12-front brake handle 13-hydraulic control unit

6. Oil supply system

6.1 M310/250 Fuel evaporation

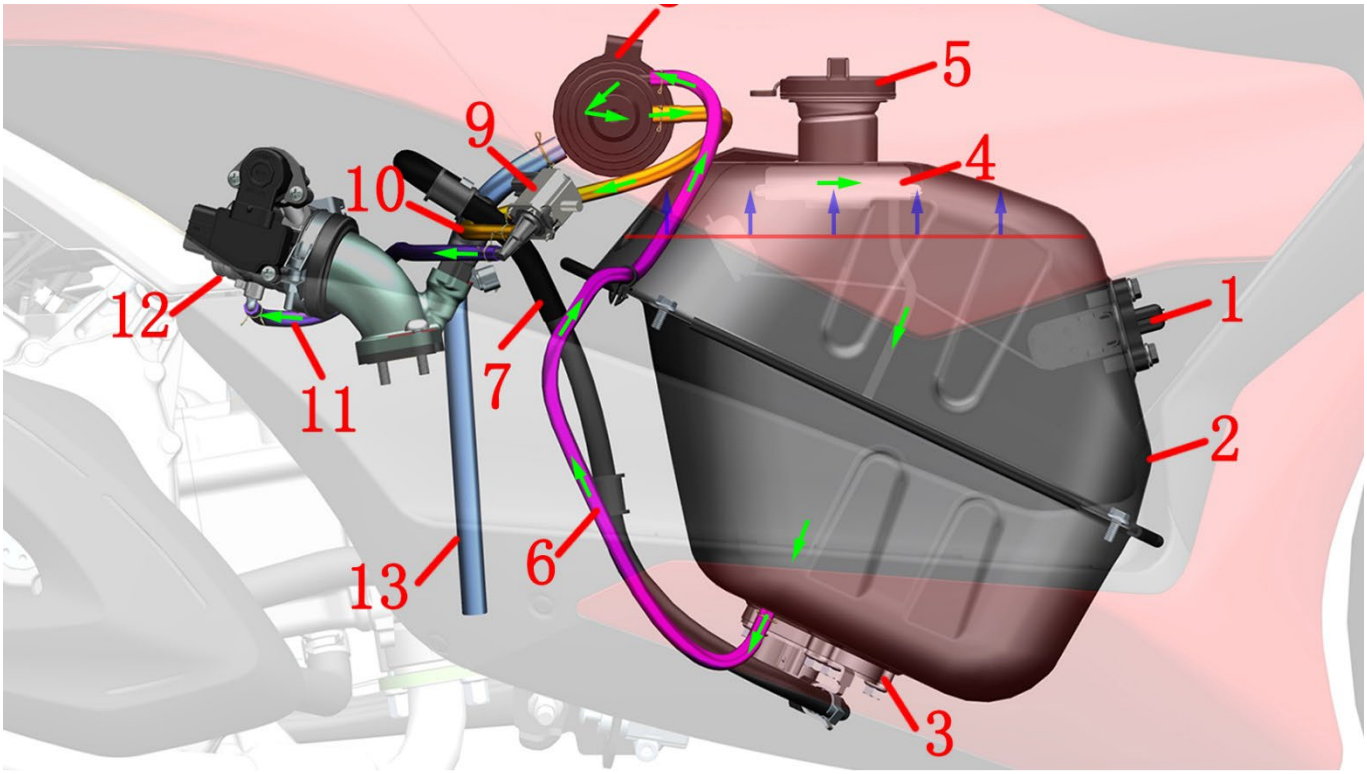

1- Fuel level sensor 2- Fuel tank 3- Fuel pump 4- Oil-air separator (welded inside the fuel tank) 5- Fuel tank cap 6- Adsorption/vent pipe 7-High pressure fuel pipe 8-Carbon tank 9-Carbon tank solenoid valve 10- Solenoid valve intake pipe 11- solenoid valve outlet pipe 12-throttle valve body assembly 13-intake pipe

Caution:

The carbon canister assembly includes a carbon canister 8, an adsorption/vent pipe 6, a solenoid valve intake pipe 10, a solenoid valve outlet pipe 11 and a vent/leakage pipe 13. The carbon canister components are sold as a complete set and are sold separately without being disassembled. If the vent tube is damaged, you can purchase a reliable and weather-resistant hose with the same or similar inner and outer diameters. A small amount of gasoline that enters the canister after reversing may leak from the pipe 13.

Fuel evaporation:

Oil and gas → oil and gas separator (inside the oil tank) → adsorption/vent pipe → solenoid valve intake pipe → solenoid valve outlet pipe → throttle valve body assembly → intake manifold → cylinder

6.2 M125/155 Fuel evaporation

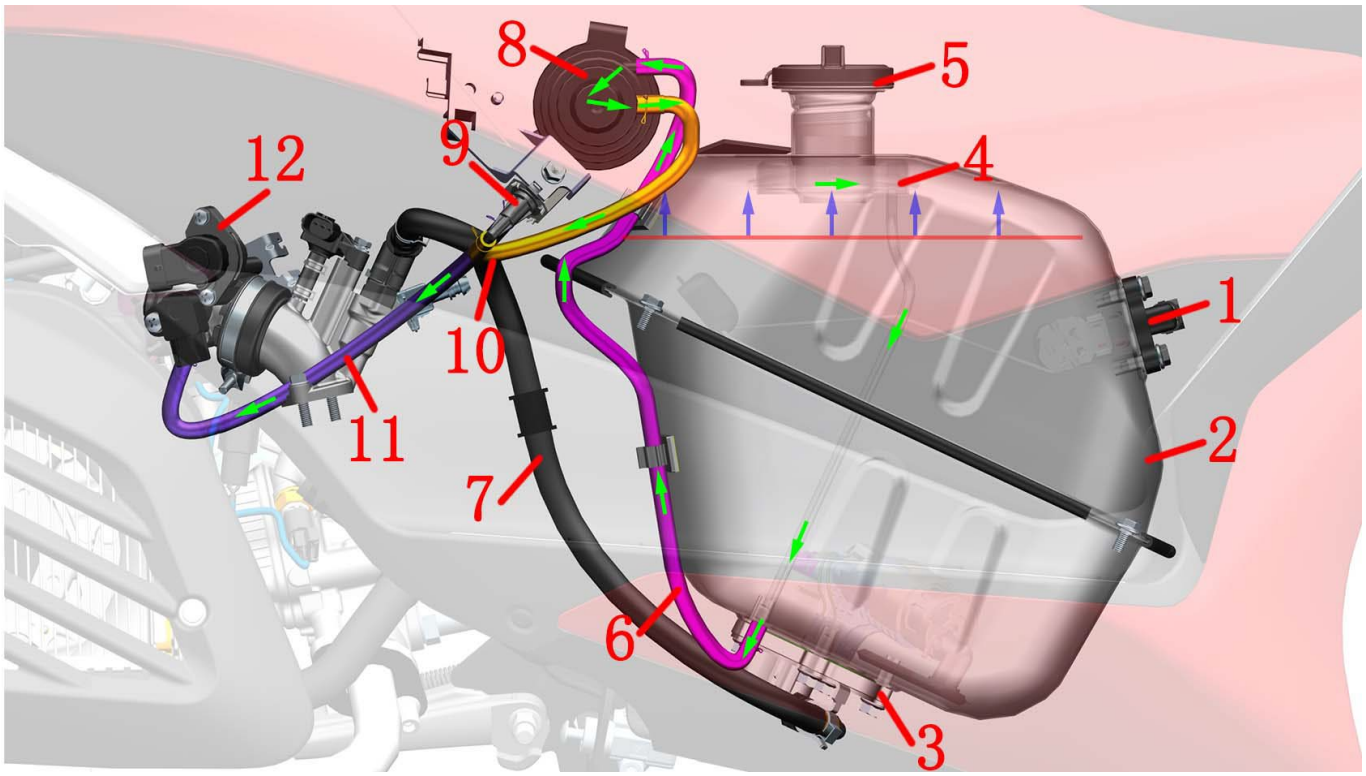

1- Fuel level sensor 2- Fuel tank 3- Fuel pump 4- Oil-air separator (welded inside the fuel tank) 5- Fuel tank cap 6- Adsorption/vent pipe 7-High pressure fuel pipe 8-Carbon tank 9-Carbon tank solenoid valve 10- Solenoid valve intake pipe 11- solenoid valve outlet pipe 12-throttle valve body assembly

Fuel evaporation:

Oil and gas → oil and gas separator (inside the oil tank) → adsorption/vent pipe → solenoid valve intake pipe → solenoid valve outlet pipe → throttle valve body assembly → intake manifold → cylinder

6.3 M350 Fuel evaporation

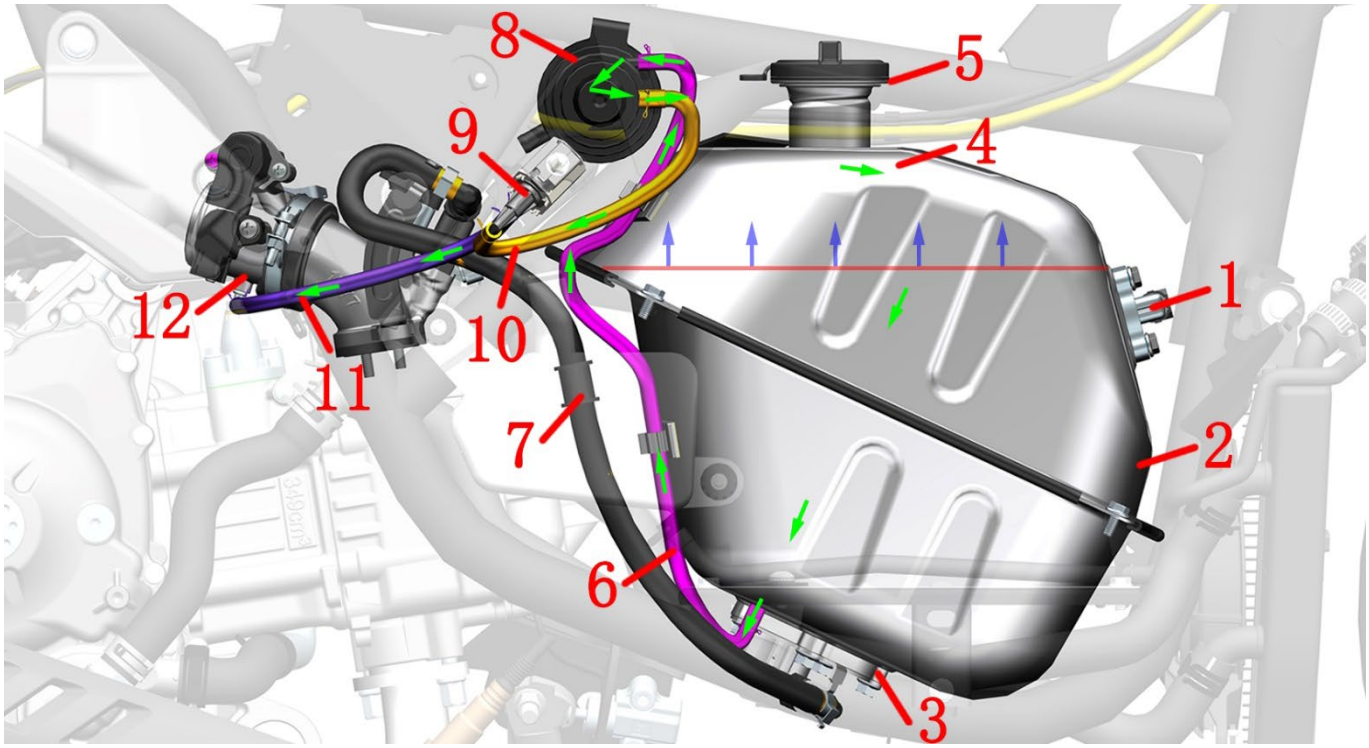

1- Fuel level sensor 2- Fuel tank 3- Fuel pump 4- Oil-air separator (welded inside the fuel tank) 5- Fuel tank cap 6- Adsorption/vent pipe 7-High pressure fuel pipe 8-Carbon tank 9-Carbon tank solenoid valve 10- Solenoid valve intake pipe 11- solenoid valve outlet pipe 12-throttle valve body assembly

Fuel evaporation:

Oil and gas → oil and gas separator (inside the oil tank) → adsorption/vent pipe → solenoid valve intake pipe → solenoid valve outlet pipe → throttle valve body assembly → intake manifold → cylinder

6.4 M368 Fuel evaporation

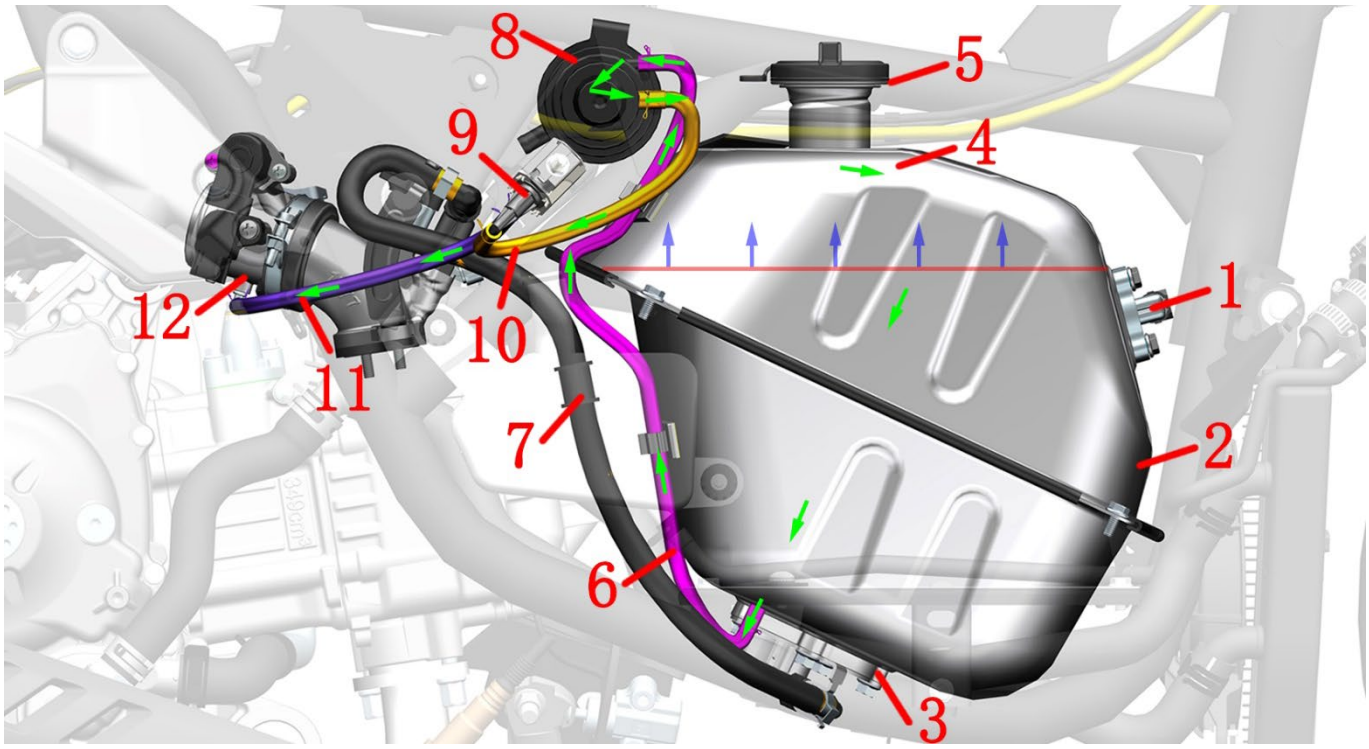

1 - Oil level sensor 2 - Fuel tank 3 - Fuel pump 4 - High-pressure oil pipe 5 - Solenoid valve outlet pipe 6 - Throttle body assembly 7 - Canister solenoid valve 8 - Canister 9 - Canister adsorption pipe 10 - External oil-gas separator 11 - Fuel tank vent pipe 12 - Fuel tank cap 13 - Solenoid valve intake pipe

Fuel evaporation:

Oil and gas → oil and gas separator (inside the oil tank) → adsorption/vent pipe → solenoid valve intake pipe → solenoid valve outlet pipe → throttle valve body assembly → intake manifold → cylinder

6.5 M368（ETC） Fuel evaporation

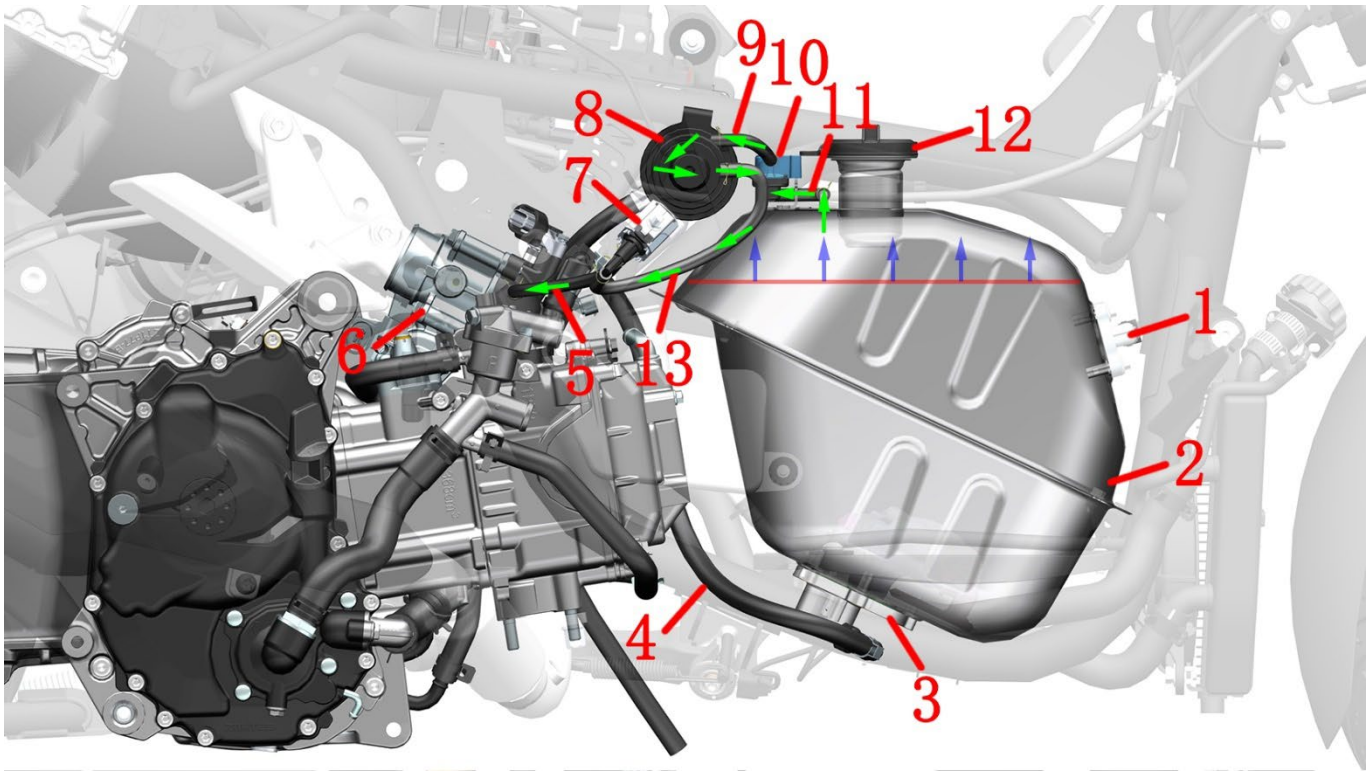

1 - Oil level sensor 2 - Fuel tank 3 - Fuel pump 4 - High-pressure fuel pipe 5 - Solenoid valve outlet pipe 6 - Throttle body assembly 7 - Canister solenoid valve 8 - Canister 9 - Canister adsorption pipe 10 - External oil-gas separator 11 - Fuel tank ventilation pipe 12 - Fuel tank cap 13 - Solenoid valve intake pipe

Fuel evaporation:

Oil and gas → Fuel tank ventilation pipe → External oil-gas separator → Canister adsorption pipe → Canister → Solenoid valve intake pipe → Solenoid valve outlet pipe → Throttle body assembly → Intake manifold → Cylinder

6.6 M310/250 Fuel supply

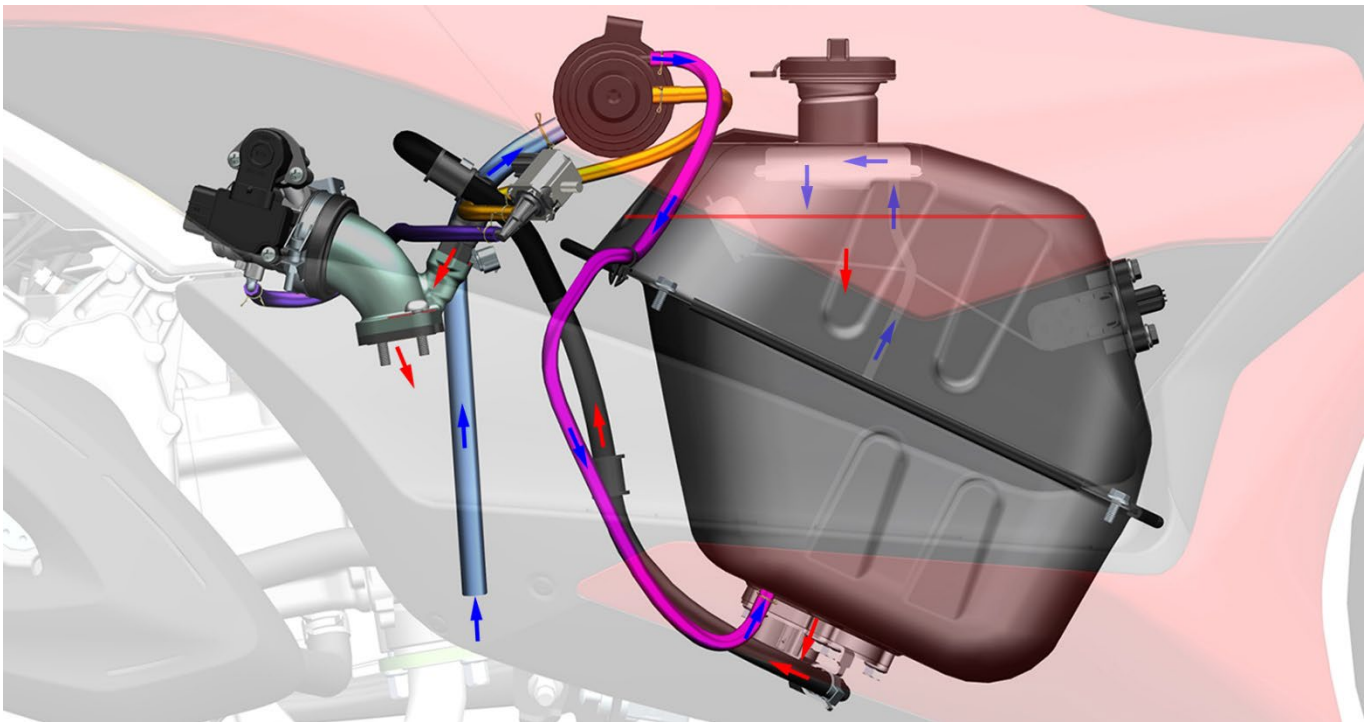

Fuel supply system:

Air→Carbon canister→Adsorption/vent pipe→Oil separator (inside the oil tank)

Fuel → Fuel pump filter → Fuel pump → High pressure fuel pipe → Fuel injector → Cylinder

6.7 M125/155 Fuel supply

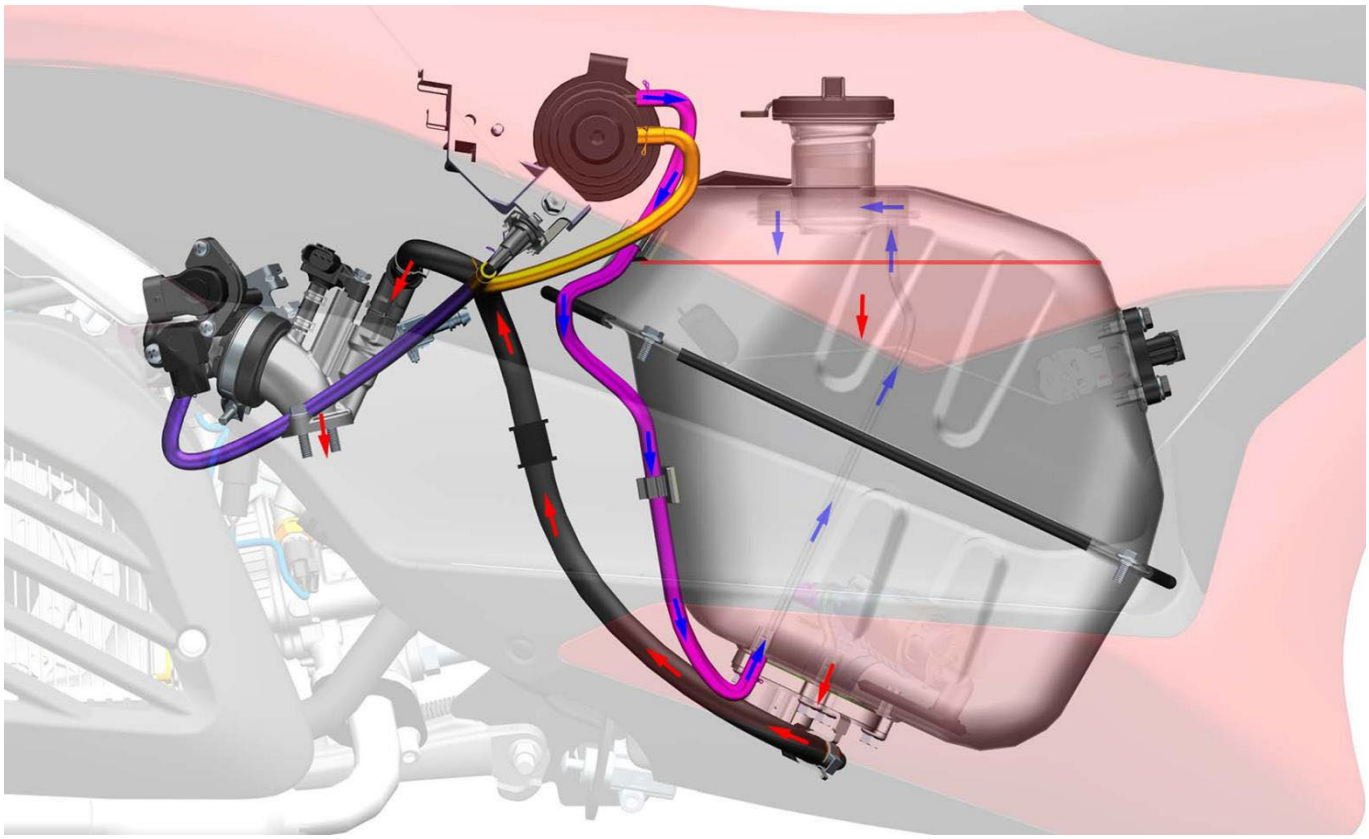

Fuel supply system:

Air→Carbon canister→Adsorption/vent pipe→Oil separator (inside the oil tank)

Fuel → Fuel pump filter → Fuel pump → High pressure fuel pipe → Fuel injector → Cylinder

6.8 M350 Fuel supply

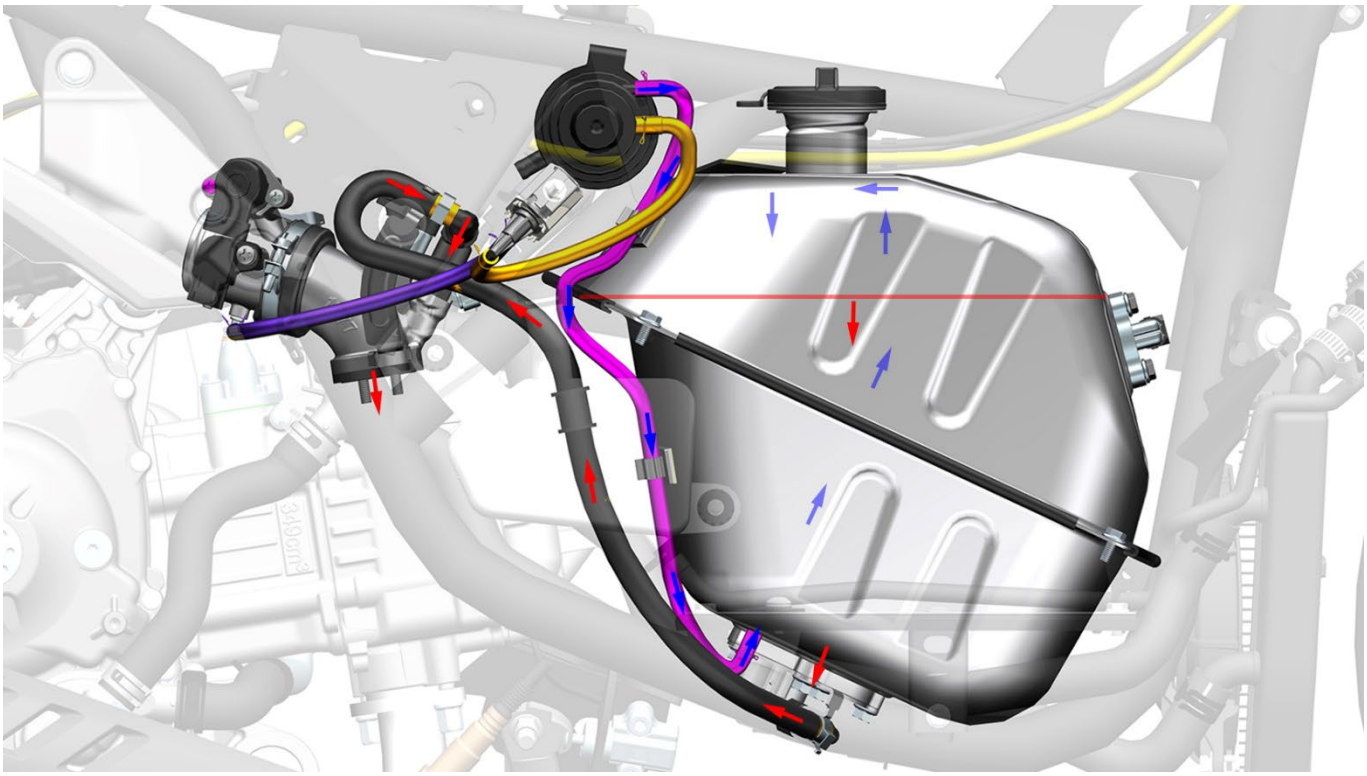

Fuel supply system:
Air→Carbon canister→Adsorption/vent pipe→Oil separator (inside the oil tank)
Fuel → Fuel pump filter → Fuel pump → High pressure fuel pipe → Fuel injector → Cylinder

6.9 M150 Fuel supply (Euro Ⅱ)

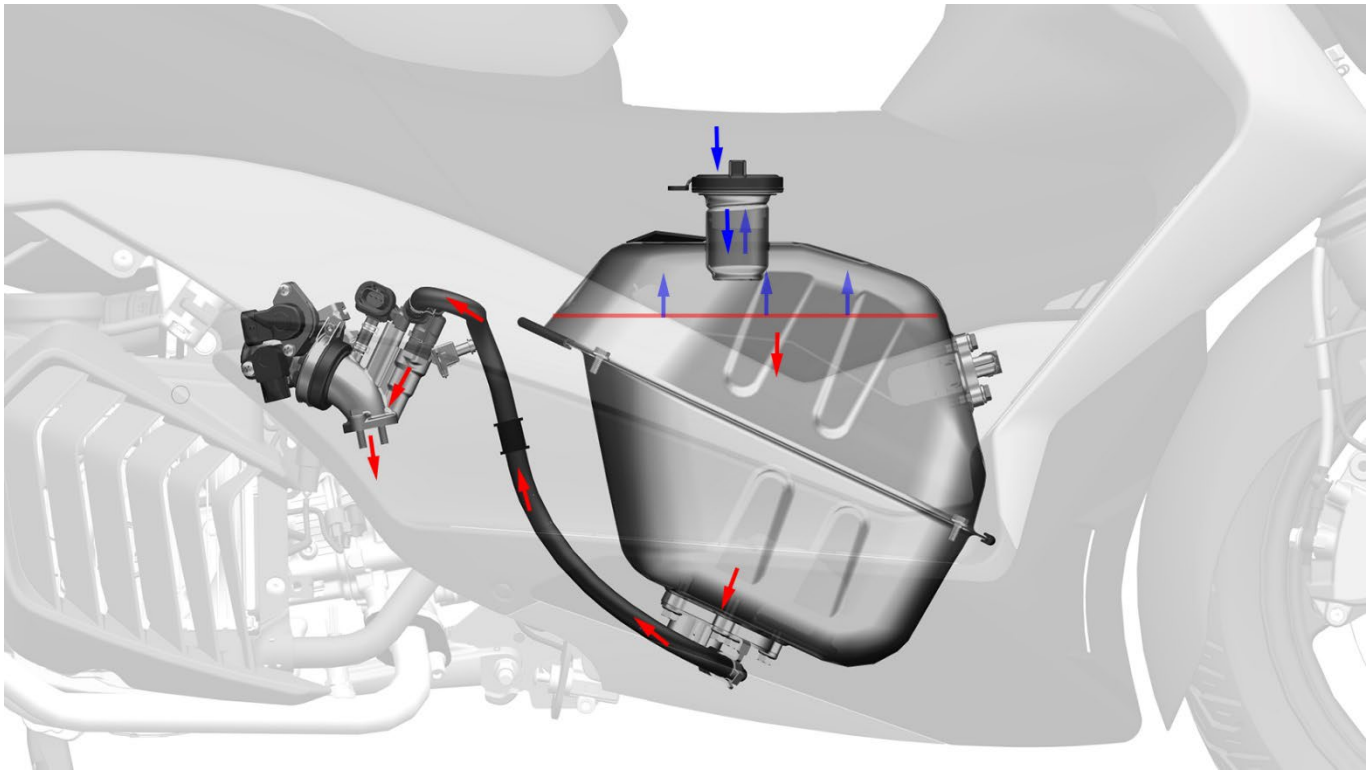

Fuel supply system:
Air→Fuel tank cover
Fuel → Fuel pump filter → Fuel pump → High pressure fuel pipe → Fuel injector → Cylinder

6.10 M368 Fuel supply

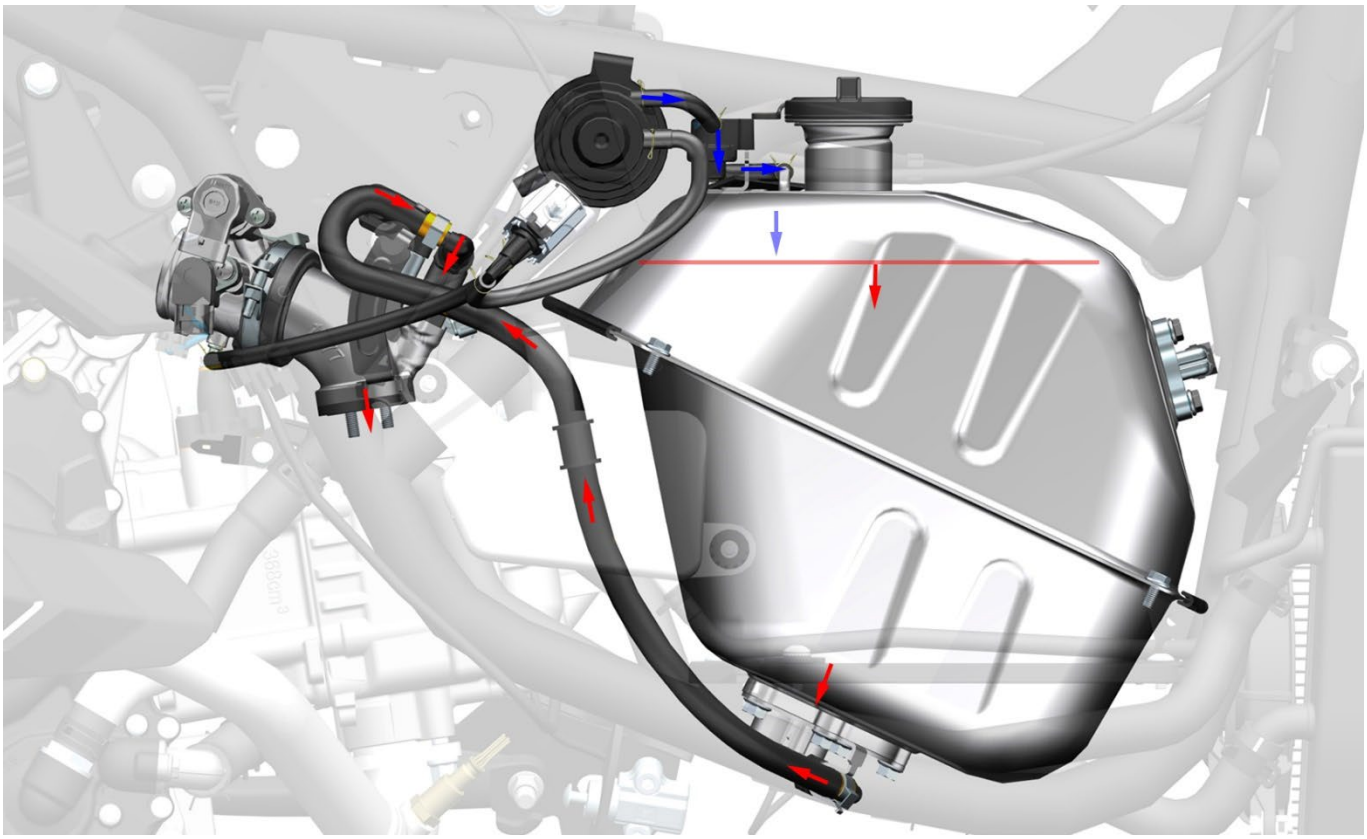

Fuel supply system:
Air→Carbon canister→Adsorption pipe→External oil gas separator→Fuel tank snorkel
Fuel → Fuel pump filter → Fuel pump → High pressure fuel pipe → Fuel injector → Cylinder

6.11 M368(ETC) Fuel supply

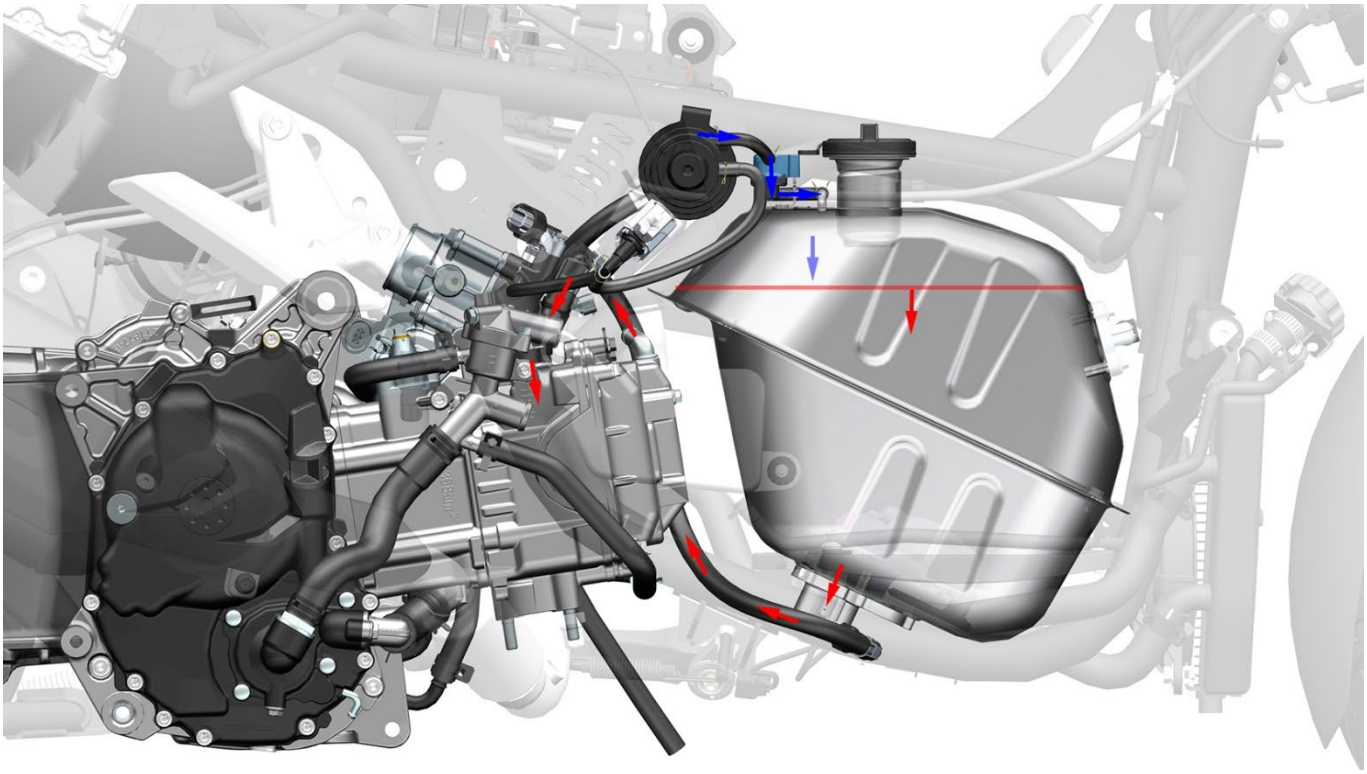

Fuel supply system:
Air→Carbon canister→Adsorption pipe→External oil gas separator→Fuel tank snorkel
Fuel → Fuel pump filter → Fuel pump → High pressure fuel pipe → Fuel injector → Cylinder

7. Distribution map of cooling system accessories

7.1 M310

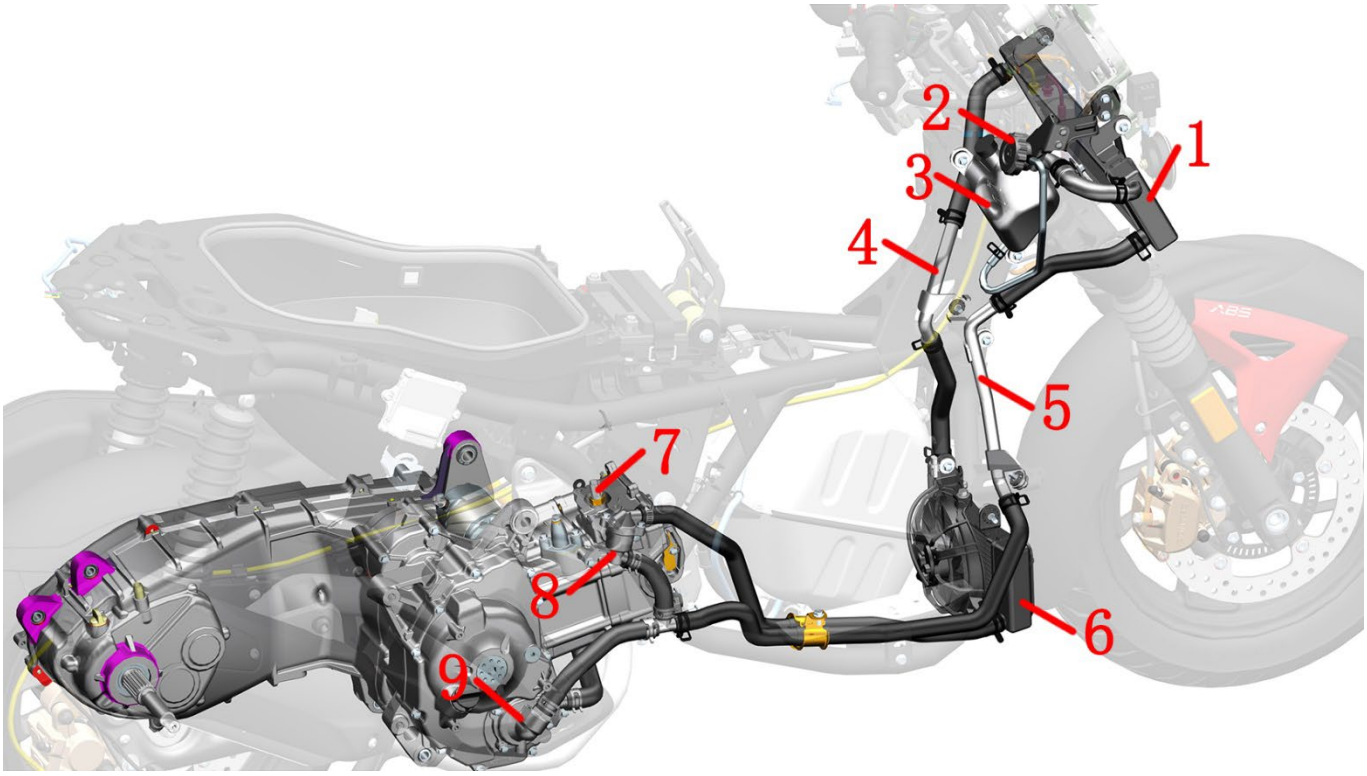

1- Main water tank 2- Water tank filling port 3- Secondary water tank 4- Aluminum water inlet pipe 5- Aluminum water outlet pipe 6- Small water tank 7- Water and oil shared sensor 8- Thermostat 9- Water pump cover assembly

7.2 M125/155

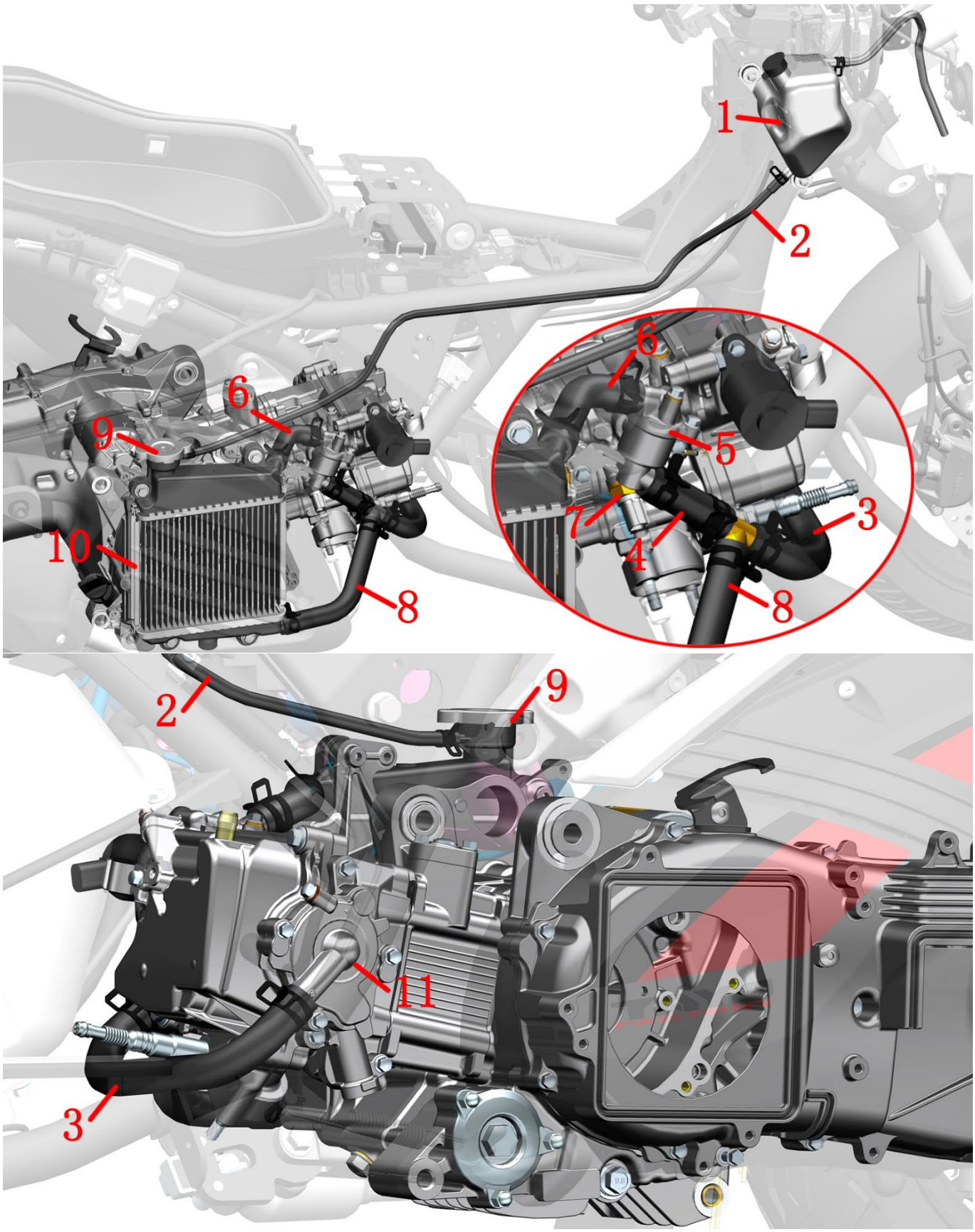

1- Secondary water tank 2-Secondary water tank link pipe 3-Engine inlet pipe 4- Thermostat outlet pipe 5- Thermostat 6- Water tank inlet pipe 7- Water and oil shared sensor 8- Water tank outlet pipe 9- Water tank cover 10- Radiator assembly 11- Water pump cover assembly

7.3 M350/250/368

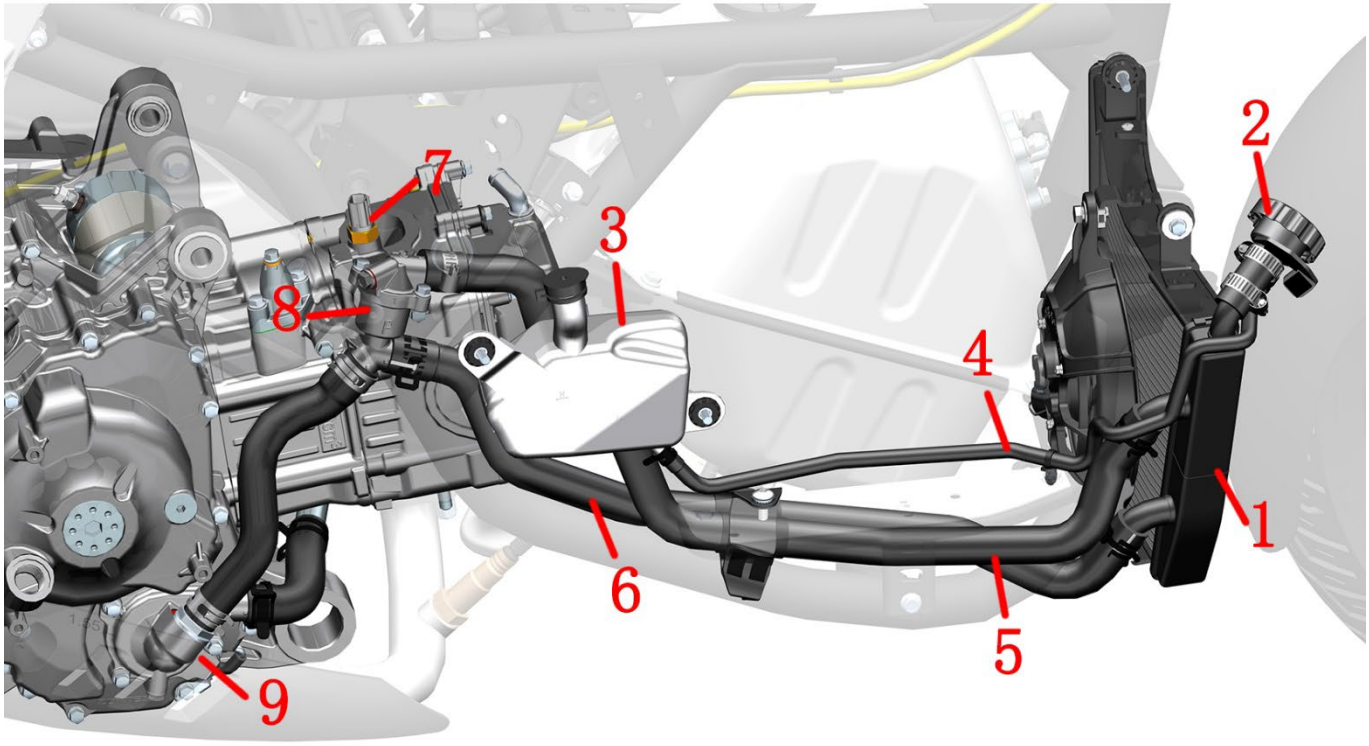

1- Main water tank 2- Water tank filling port 3- Secondary water tank 4- auxiliary water tank is connected with water pipe 5- main water tank inlet pipe 6- main water tank outlet pipe 7- Water and oil shared sensor 8- Thermostat 9- Water pump cover assembly

7.4 M368(ETC)

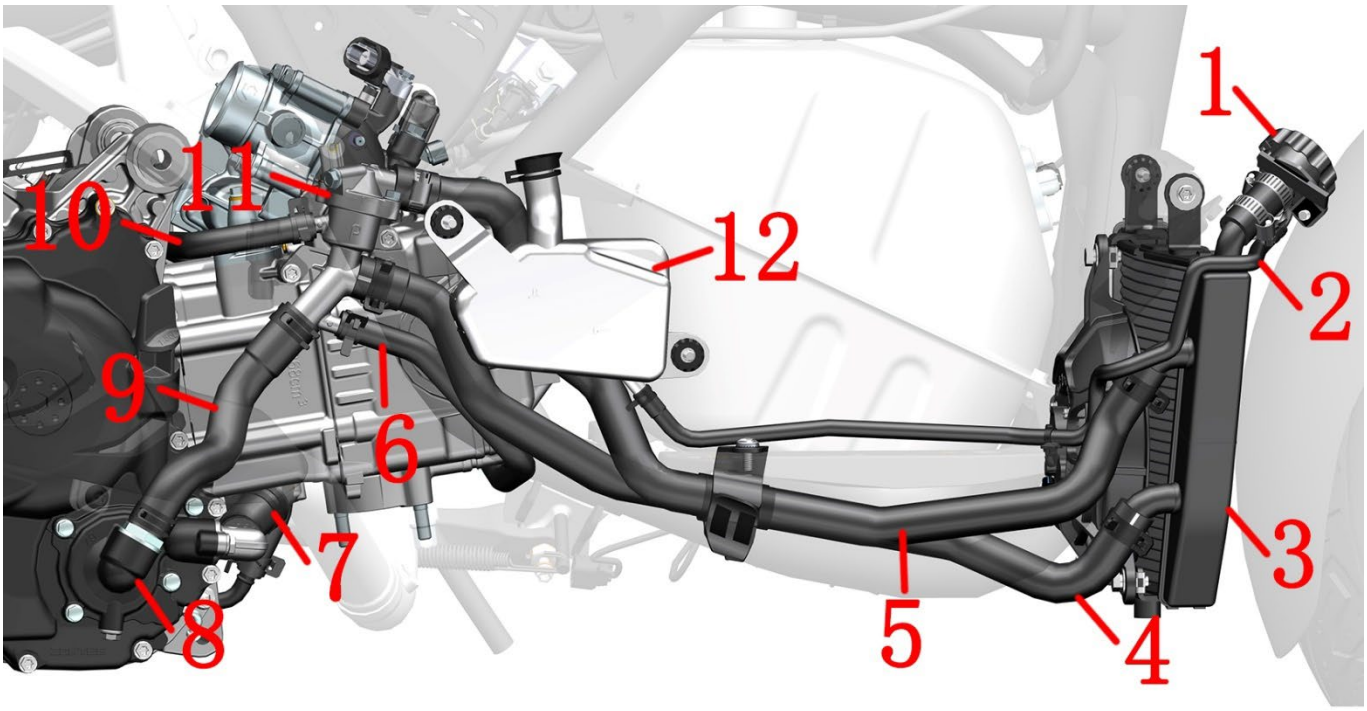

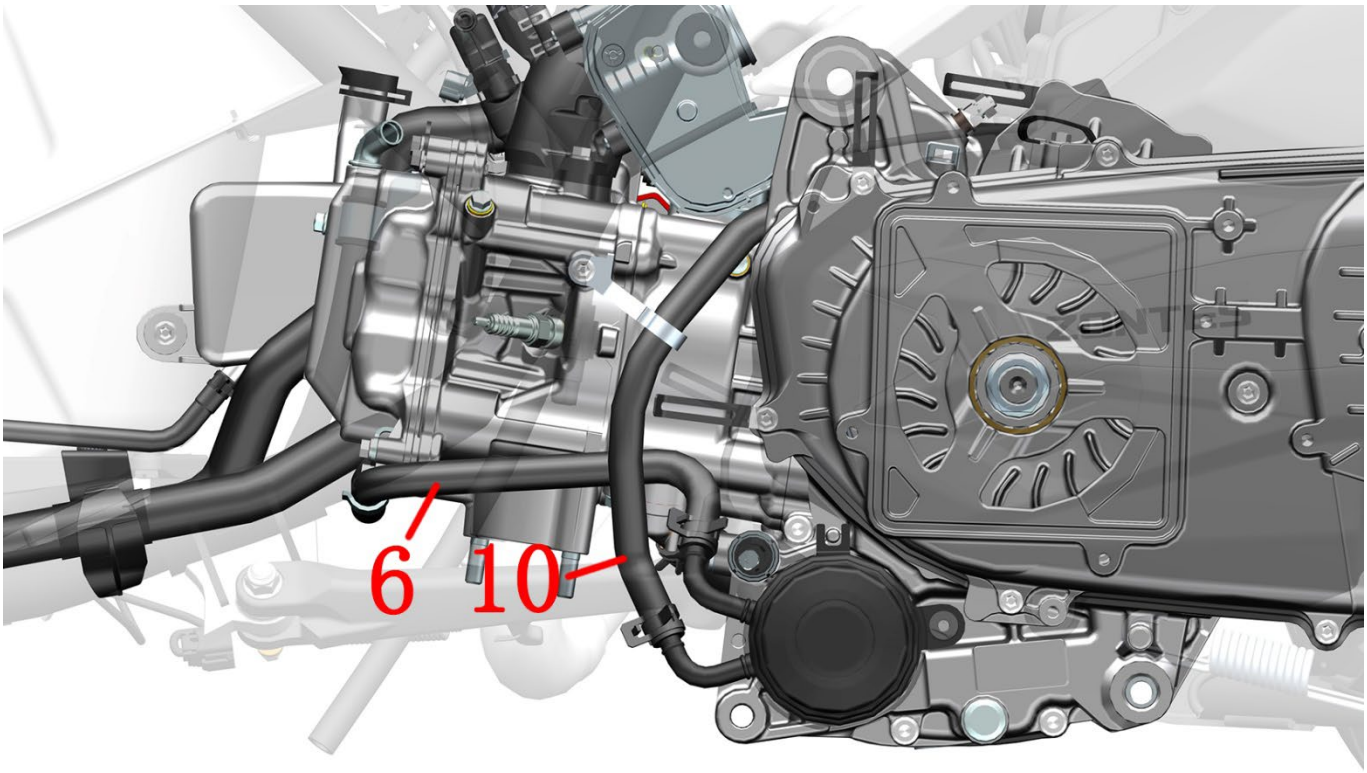

1 - Water tank filler neck 2 - Auxiliary water tank connecting water pipe 3 - Water tank 4 - Water tank outlet pipe 5 - Water tank inlet pipe 6 - Oil cooler outlet pipe 7 - Water pump cover outlet pipe 8 - Water pump assembly 9 - Water pump cover inlet pipe 10 - Oil cooler inlet pipe 11 - Thermostat 12 - Auxiliary water tank

8. Electrical device layout

8.1 M125

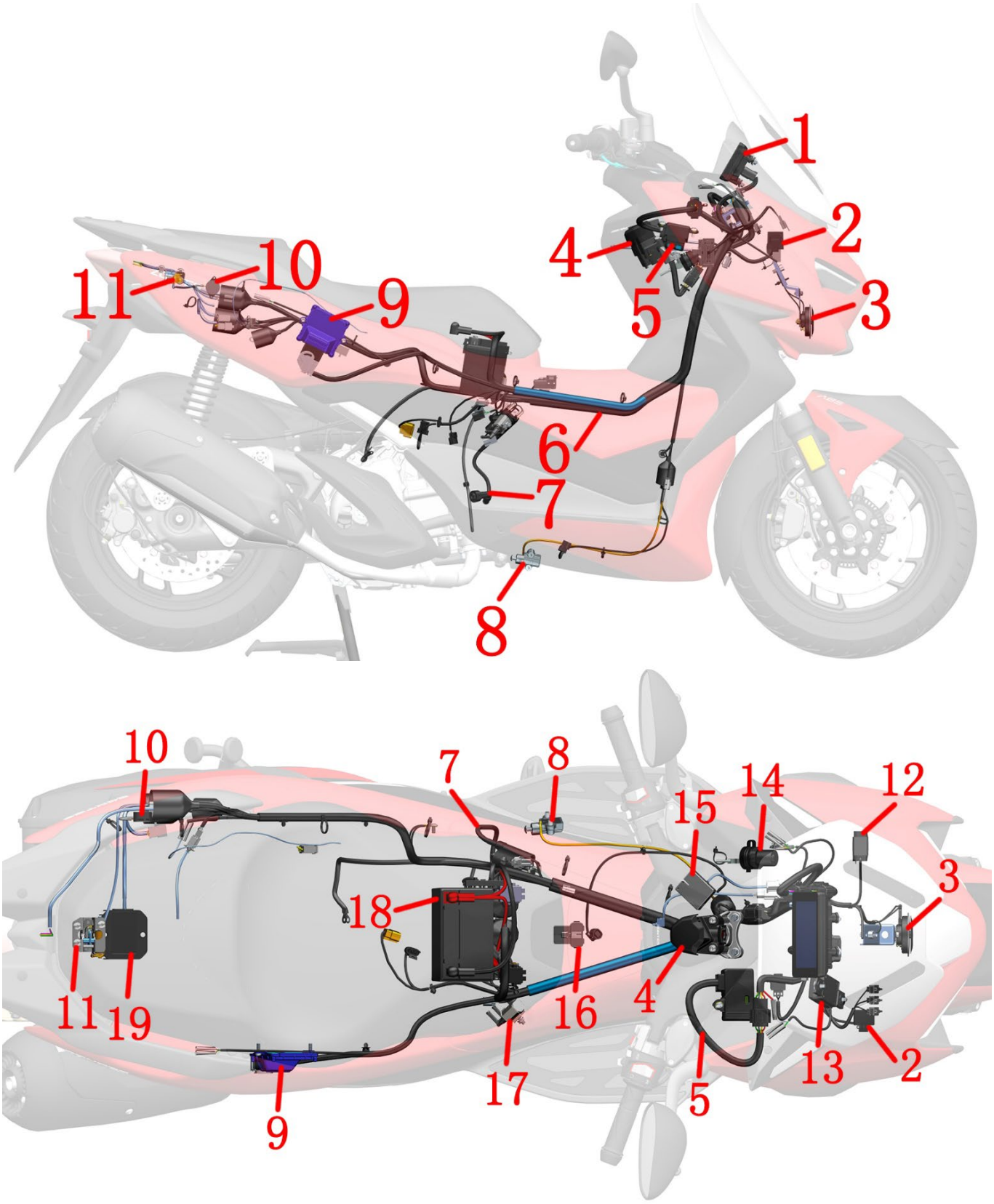

1-TFT Speedometer 2-Flasher 3-horn 4-faucet lock 5-PKE 6-main cable 7-ignition coil 8-side bracket flameout switch 9-engine controller (ECU) 10-buzzer 11-cushion lock 12 -Dump switch 13-Windshield motor controller 14-USB charging cable 15-Front storage box lock 16-Electronic fuel tank lock 17-Canister solenoid valve

18-Battery 19-Rectifier

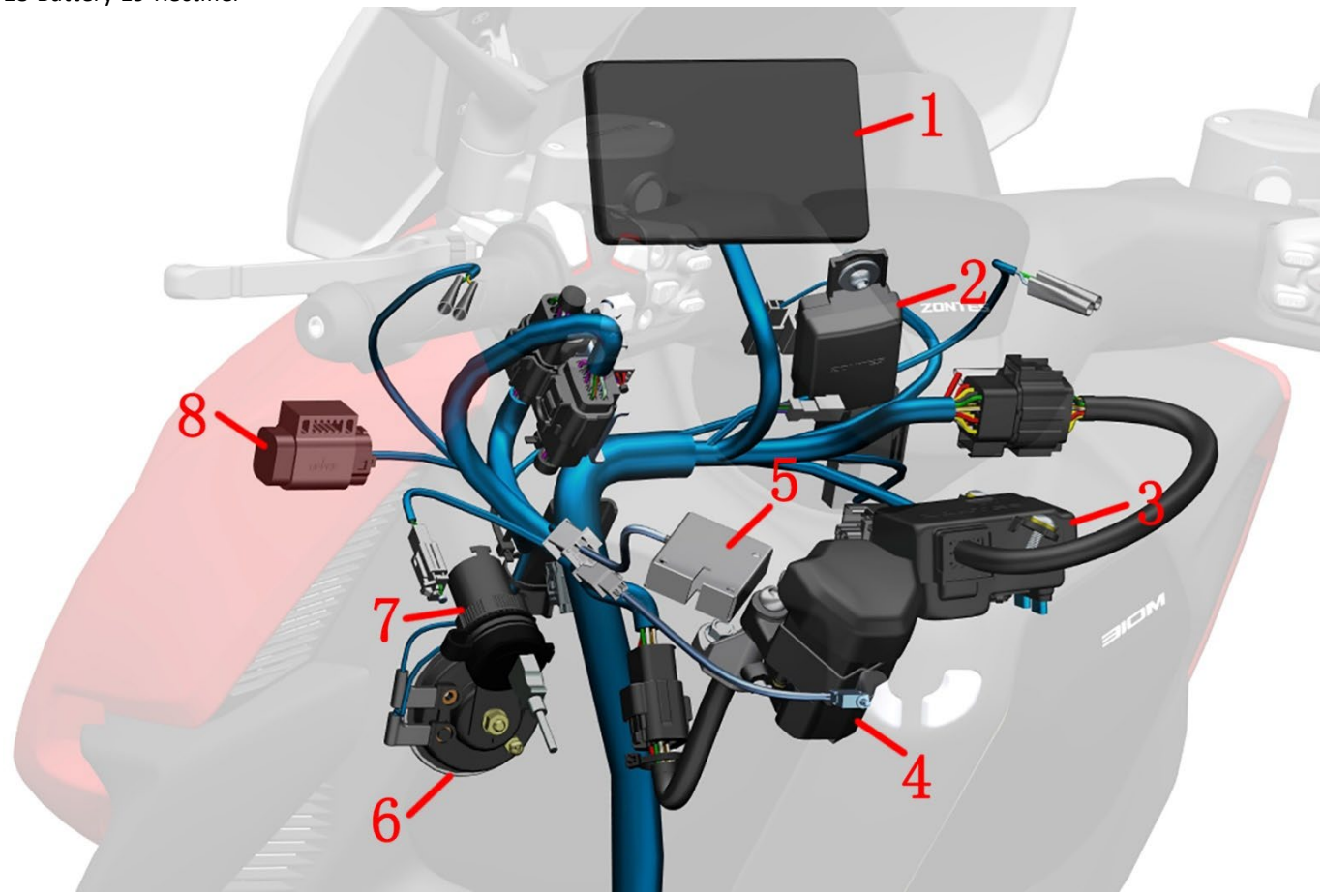

1-TFT meter 2-Windshield motor controller 3-PKE 4-faucet lock 5-front storage box lock 6-speaker 7-USB charging cable 8-dump switch

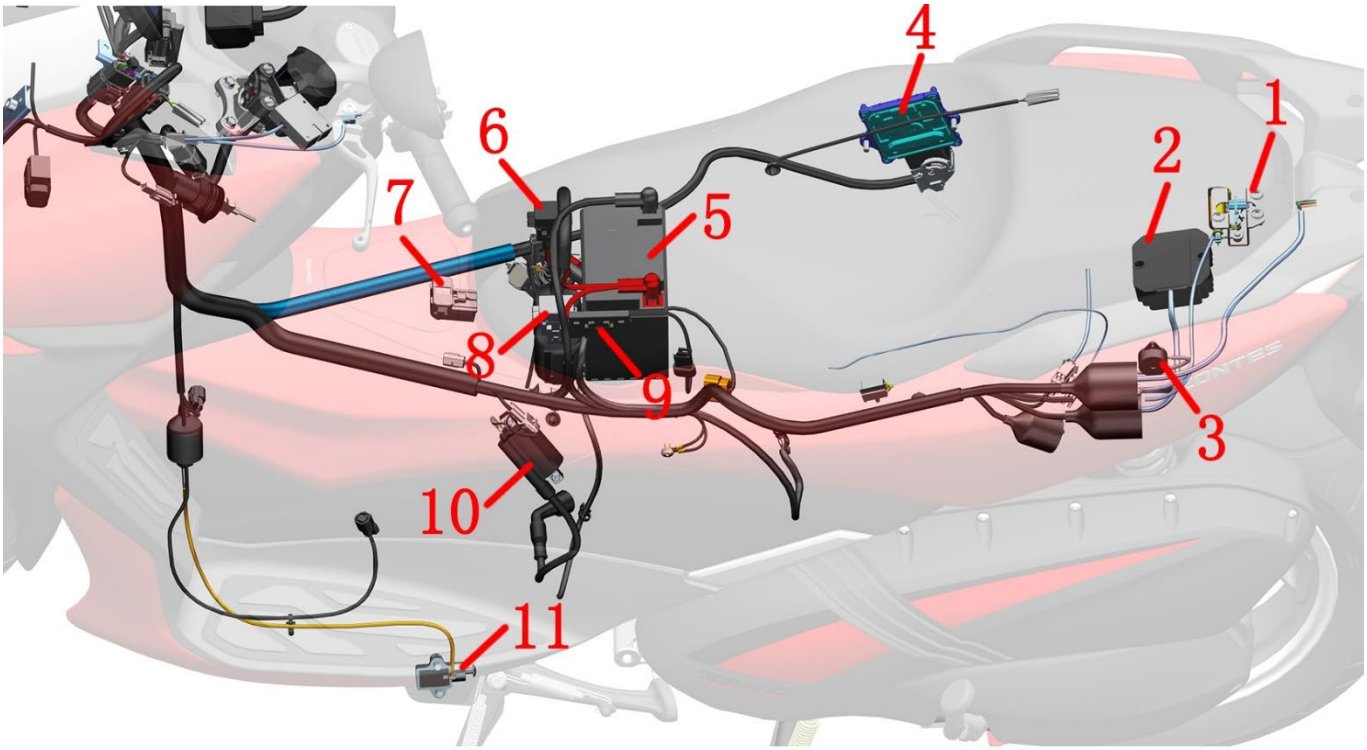

1- Cushion Lock 2- Rectifier 3- Buzzer 4- Engine Controller (ECU) 5- Battery 6- Fuse Box 1 7- Electronic Fuel Tank Lock 8- Fuse Box 2 9- Fuse Box 3 10- Ignition Coil 11- Side Bracket flameout switch

8.2 M310

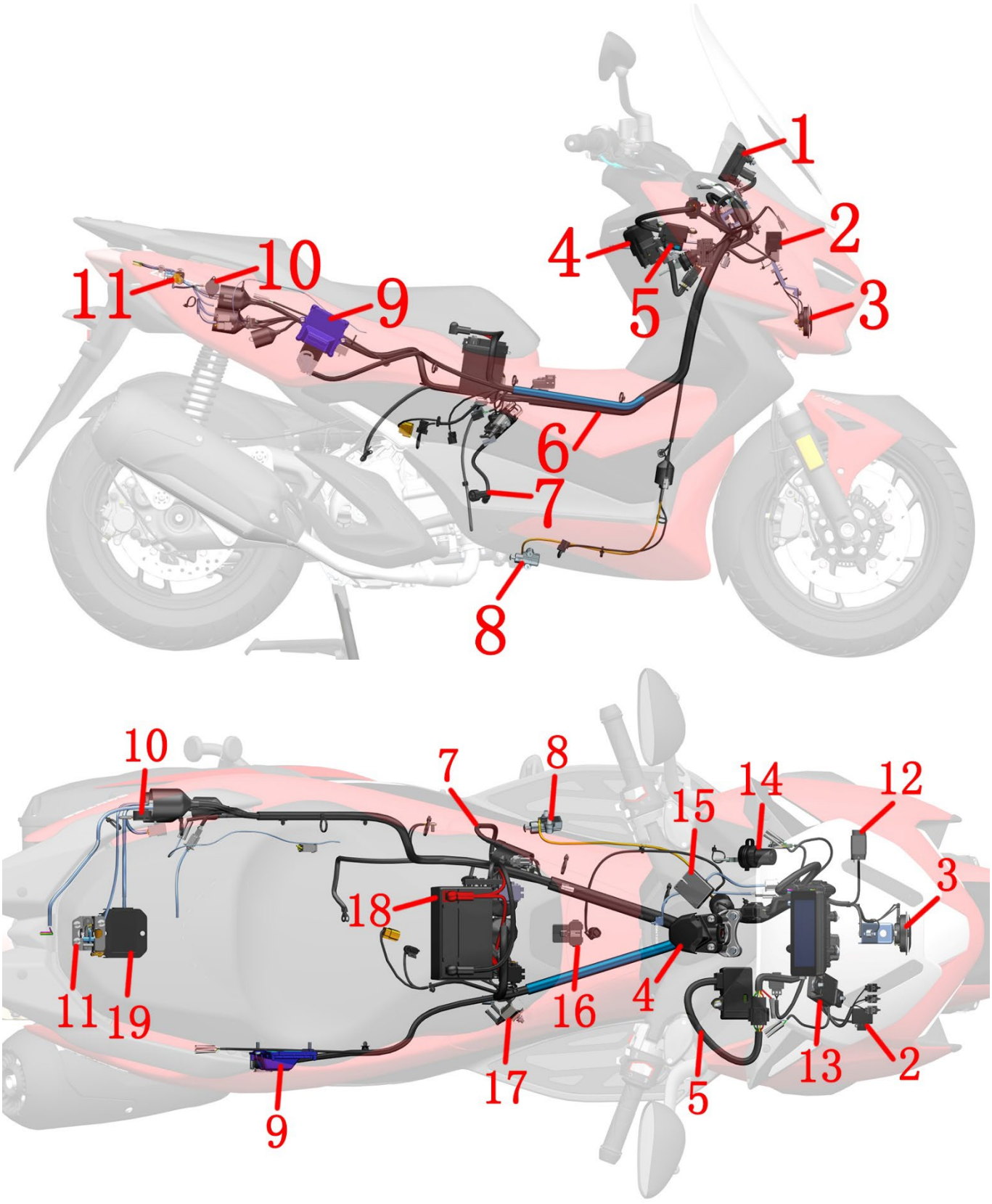

1-TFT Speedometer 2-Flasher 3-horn 4-faucet lock 5-PKE 6-main cable 7-ignition coil 8-side bracket flameout switch 9-engine controller (ECU) 10-buzzer 11-cushion lock 12 -Dump switch 13-Windshield motor controller 14-USB charging cable 15-Front storage box lock 16-Electronic fuel tank lock 17-Canister solenoid valve

18-Battery 19-Rectifier

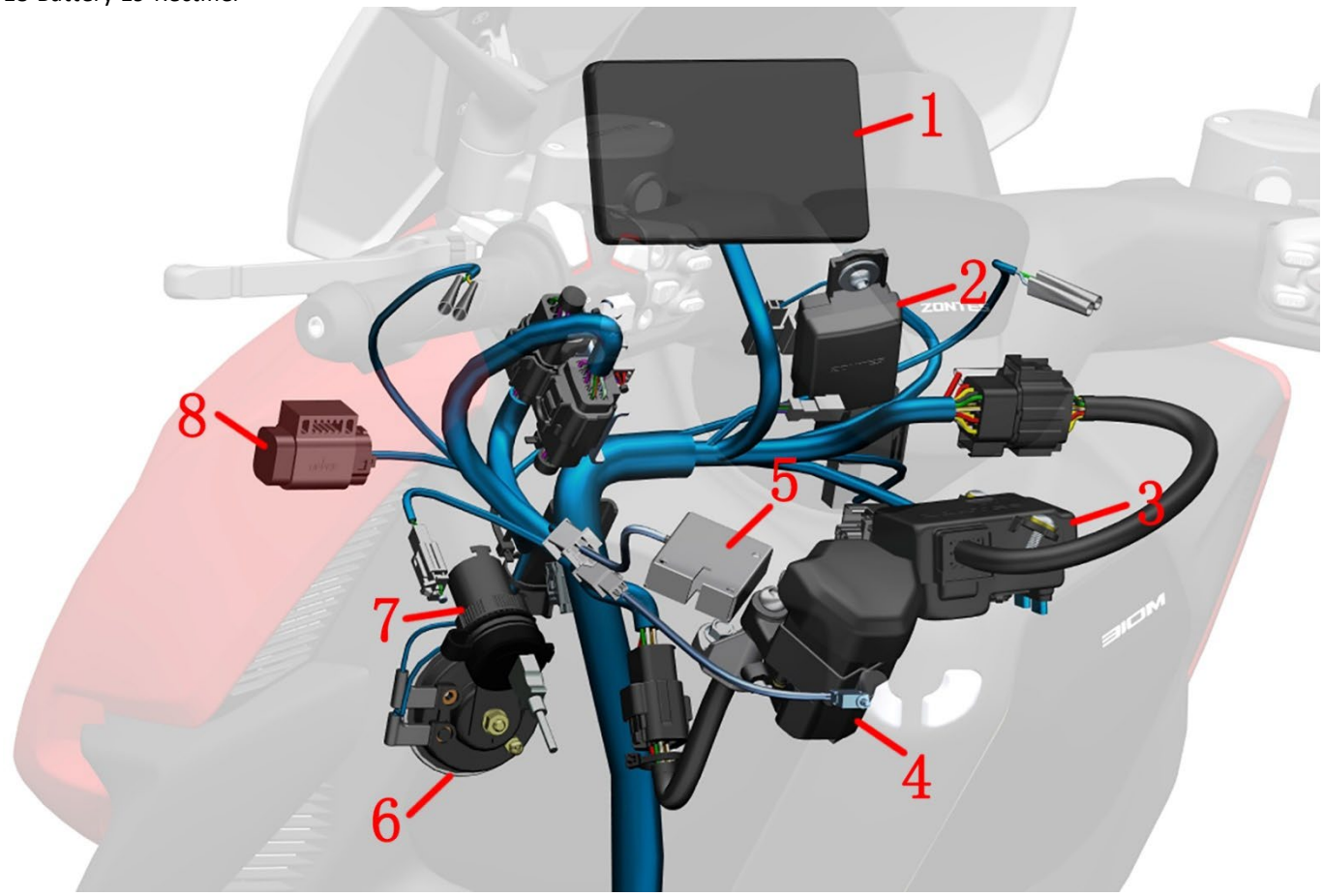

1-TFT meter 2-Windshield motor controller 3-PKE 4-faucet lock 5-front storage box lock 6-speaker 7-USB charging cable 8-dump switch

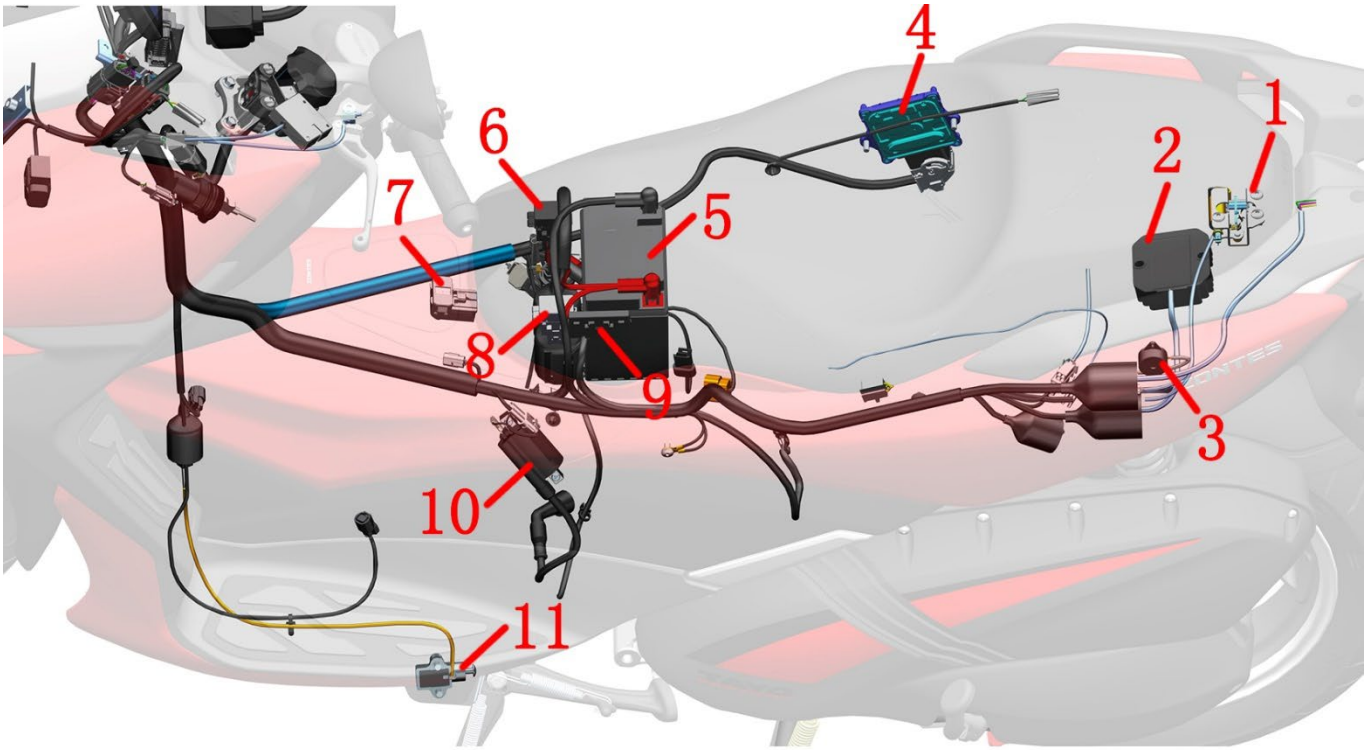

1- Cushion Lock 2- Rectifier 3- Buzzer 4- Engine Controller (ECU) 5- Battery 6- Fuse Box 1 7- Electronic Fuel Tank Lock 8- Fuse Box 2 9- Fuse Box 3 10- Ignition Coil 11- Side Bracket flameout switch

8.3 M350/250/368

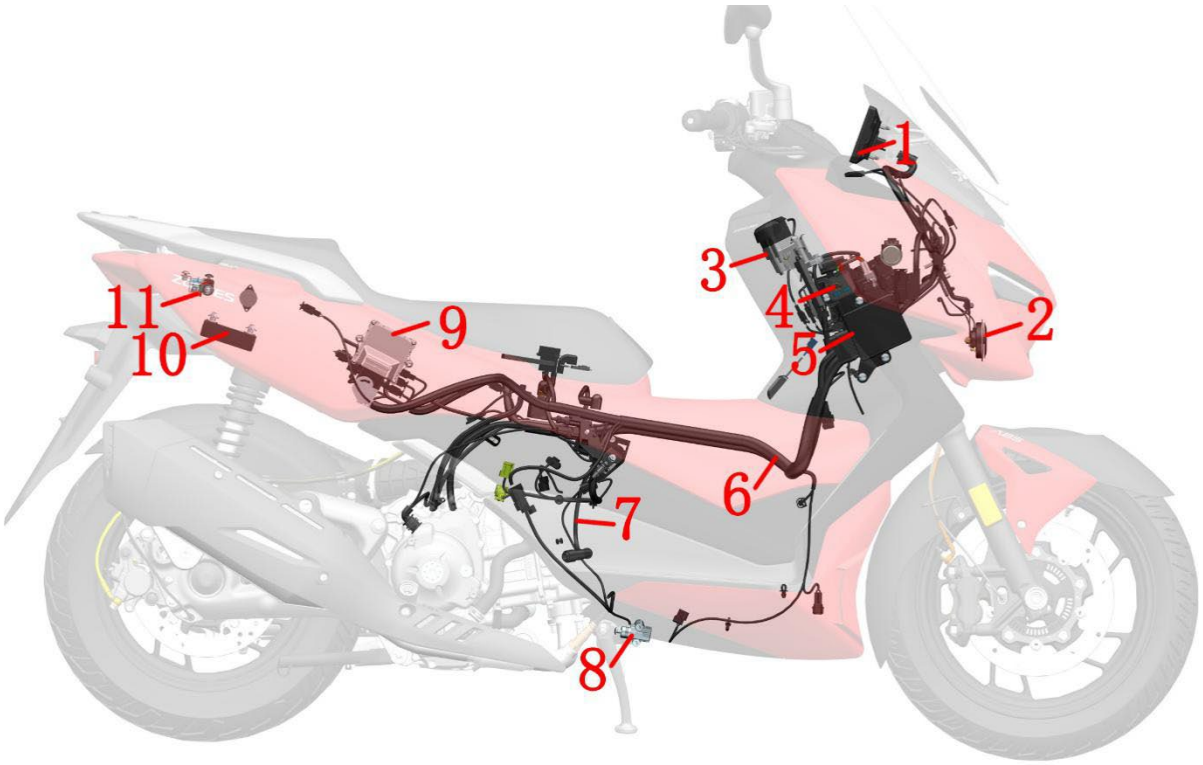

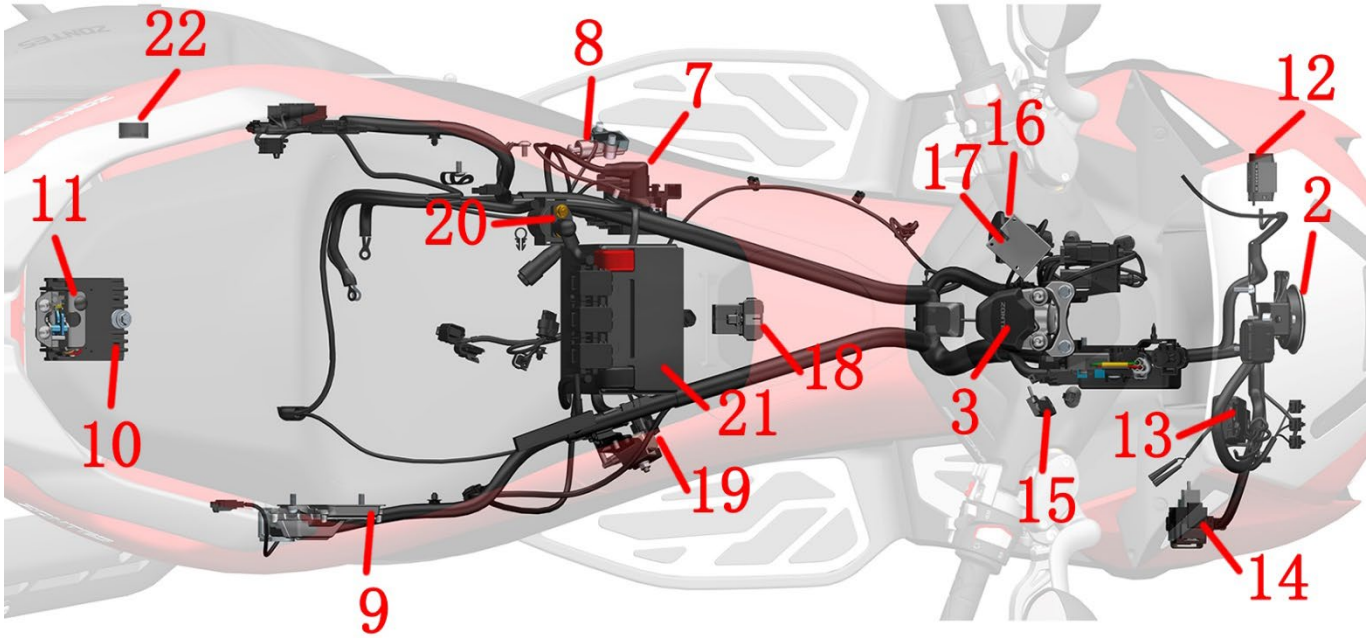

1-TFT Speedometer 2- horn 3- faucet lock 4- charging port holder 5-PKE 6-main cable 7-ignition coil 8-side bracket flameout switch 9-engine controller (ECU) 10- Rectifier 11-cushion lock 12 -Dump switch 13-Windshield motor controller 14- Flasher 15-antenna 16-- USB charging cable 17-Front storage box lock 18-Electronic fuel tank lock 19- Canister solenoid valve 20-Start relay 21- battery 22-buzzer

8.4 M368(ETC)

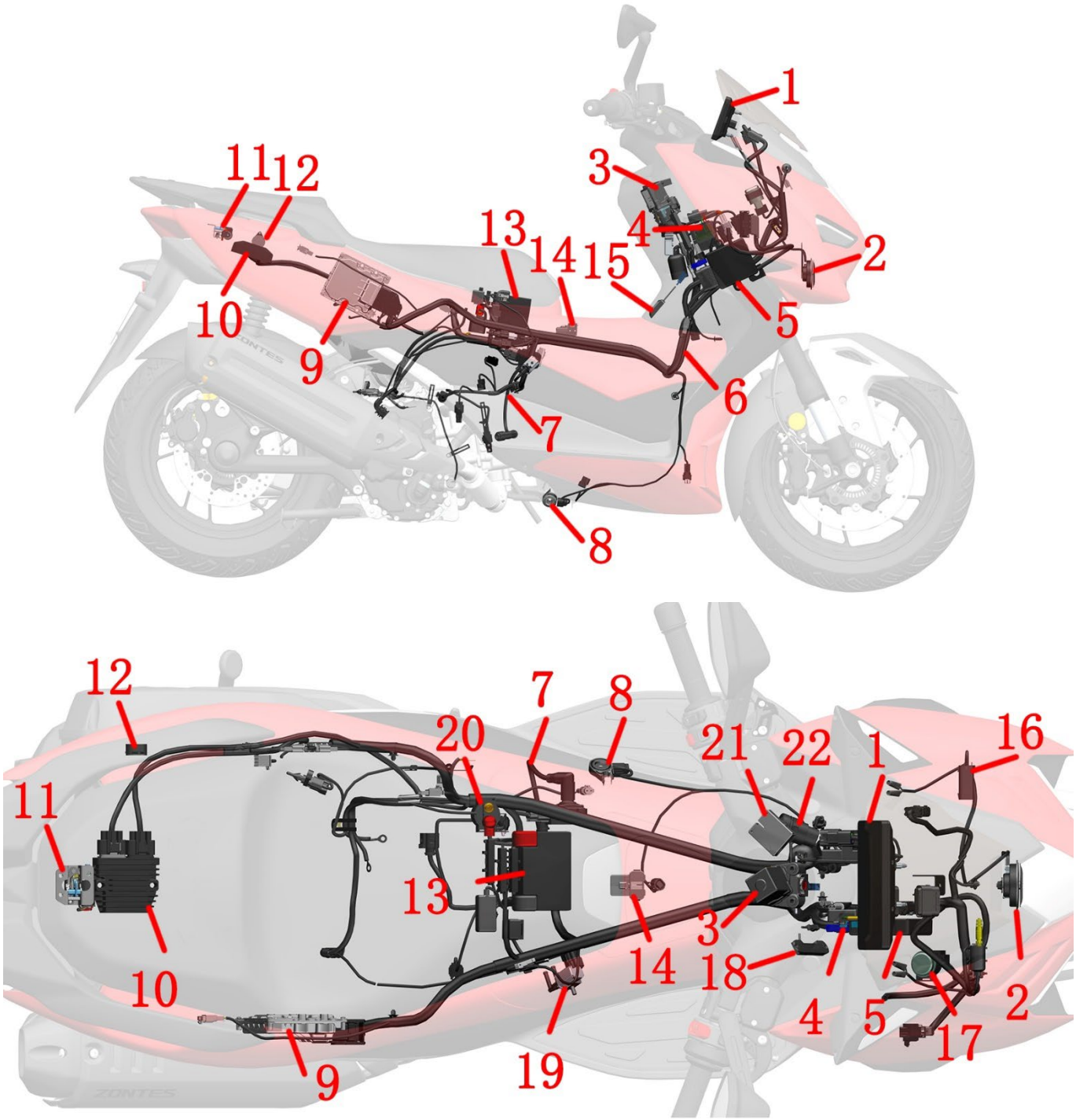

1 - TFT Instrument 2 - Horn 3 - Handlebar Lock 4 - Charging Port Base 5 - PKE 6 - Main Cable 7 - EFI High Voltage Wire 8 - Side Stand Kill Switch 9 - Engine Controller (ECU) 10 - Rectifier 11 - Seat Lock 12 - PKE Buzzer 13 - Battery 14 - Electronic Fuel Tank Lock 15 - GPS Antenna 16 - Tilt Switch 17 - Flasher 18 - Inductive Antenna 19 - Carbon Canister Solenoid Valve 20 - Starter Relay 21 - Front Storage Box Lock 22 - USB Charging Cable

9. Intake and exhaust system

9.1 M310

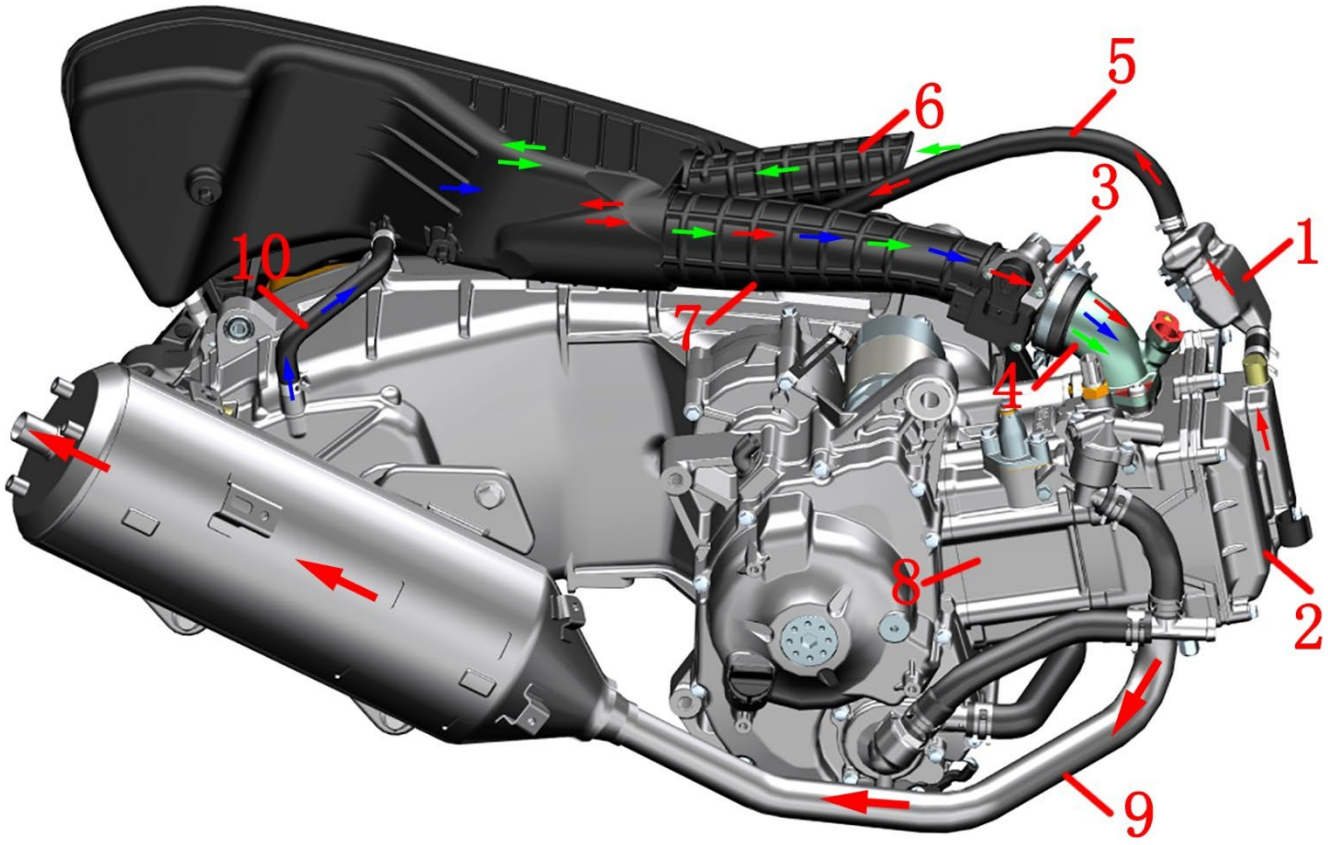

1- External oil and gas separator 2- Cylinder head 3- Throttle valve body assembly 4- Intake manifold 5- Cylinder head exhaust pipe 6- Air filter intake pipe 7- Air filter outlet pipe 8- Cylinder 9- Muffler 10- Crankshaft Box exhaust pipe

Intake system (indicated by the green arrow):
Air → Air filter intake pipe → Air filter element → Air filter outlet pipe → Throttle valve assembly body → Intake manifold → Cylinder → Muffler

Cylinder head exhaust gas control system (red arrow indicates):

Exhaust gas → cylinder head cover → oil and gas separator → cylinder head exhaust pipe → air filter → air filter outlet pipe → throttle valve body → intake manifold → cylinder → muffler

Gearbox exhaust gas control system (indicated by the blue arrow):
Exhaust gas → gearbox exhaust pipe → air filter outlet pipe → throttle valve body → intake manifold → cylinder → muffle

9.2 M125

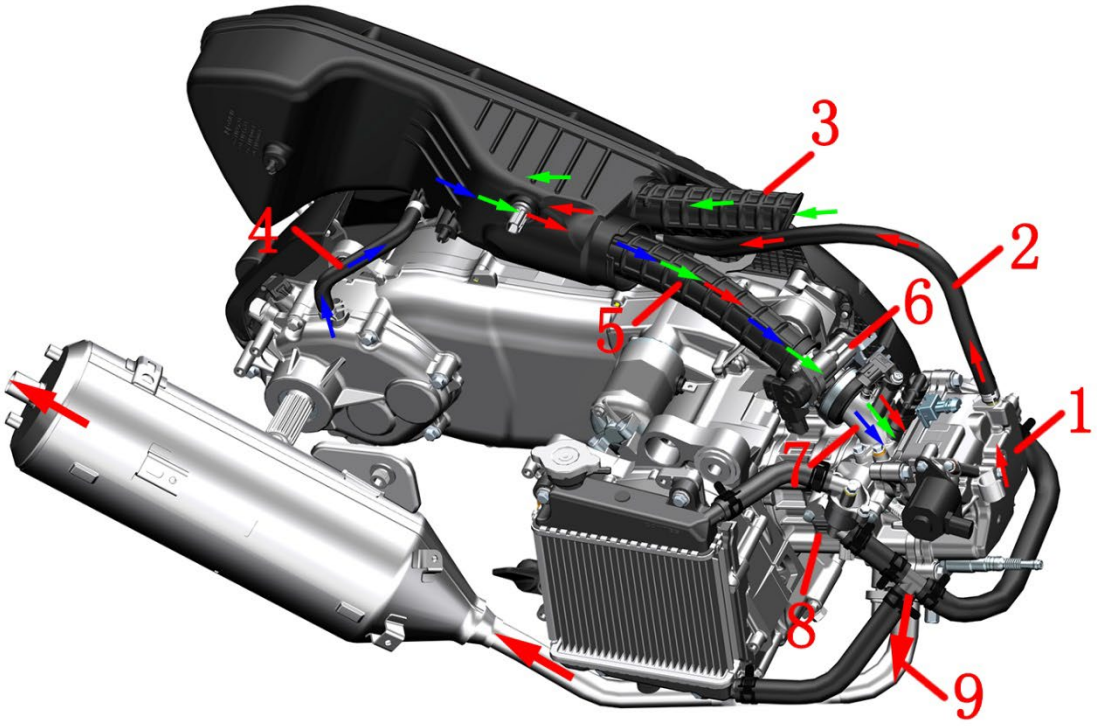

1- Cylinder head 2-Cylinder head exhaust pipe 3- Air filter intake pipe 4- Crankshaft Box exhaust pipe 5-Air filter outlet pipe 6-Throttle valve body assembly 7- Intake manifold 8-Cylinder 9- Muffler

Intake system (indicated by the green arrow):
Air → Air filter intake pipe → Air filter element → Air filter outlet pipe → Throttle valve assembly body → Intake manifold → Cylinder → Muffler

Cylinder head exhaust gas control system (red arrow indicates):
Exhaust gas → cylinder head cover →cylinder head exhaust pipe → air filter → air filter outlet pipe → throttle valve body → intake manifold → cylinder → muffler

Gearbox exhaust gas control system (indicated by the blue arrow):
Exhaust gas → gearbox exhaust pipe → air filter outlet pipe → throttle valve body → intake manifold → cylinder → muffle

9.3 M350/368

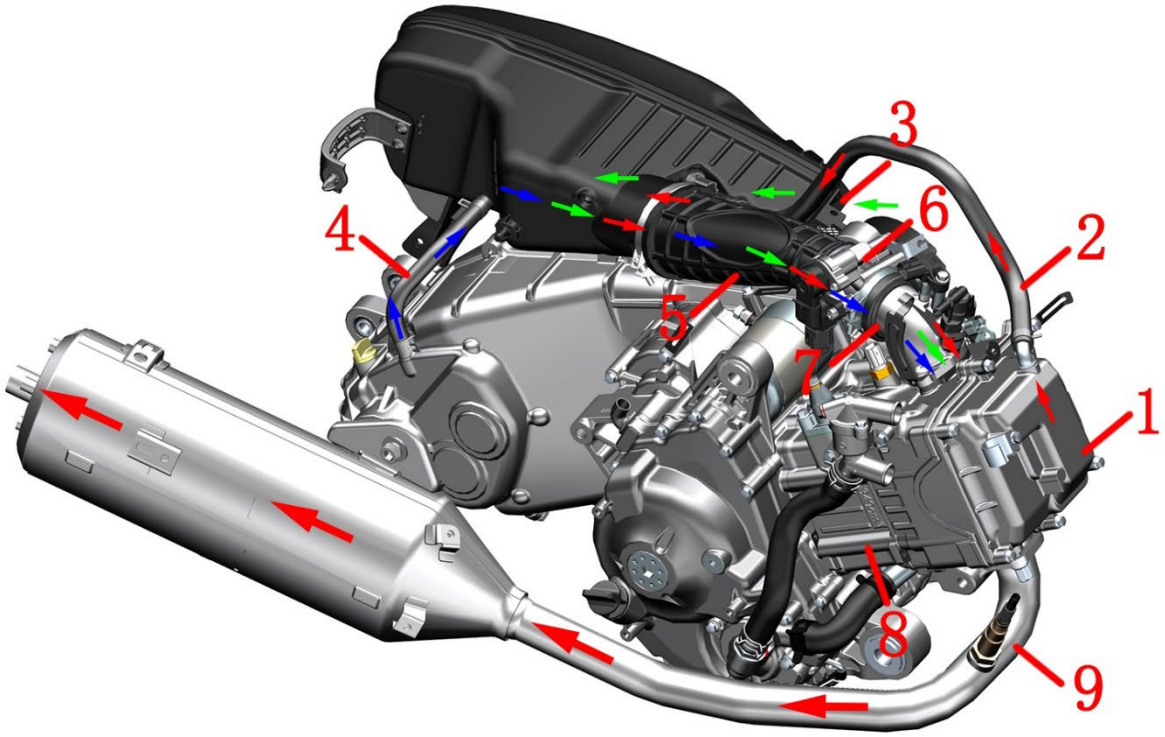

1- Cylinder head 2-Cylinder head exhaust pipe 3- Air filter intake pipe 4- Crankshaft Box exhaust pipe 5-Air filter outlet pipe 6-Throttle valve body assembly 7- Intake manifold 8-Cylinder 9- Muffler

Intake system (indicated by the green arrow):
Air → Air filter intake pipe → Air filter element → Air filter outlet pipe → Throttle valve assembly body → Intake manifold → Cylinder → Muffler

Cylinder head exhaust gas control system (red arrow indicates):
Exhaust gas → cylinder head cover →cylinder head exhaust pipe → air filter → air filter outlet pipe → throttle valve body → intake manifold → cylinder → muffler

Gearbox exhaust gas control system (indicated by the blue arrow):
Exhaust gas → gearbox exhaust pipe → air filter outlet pipe → throttle valve body → intake manifold → cylinder → muffle

9.4 M250

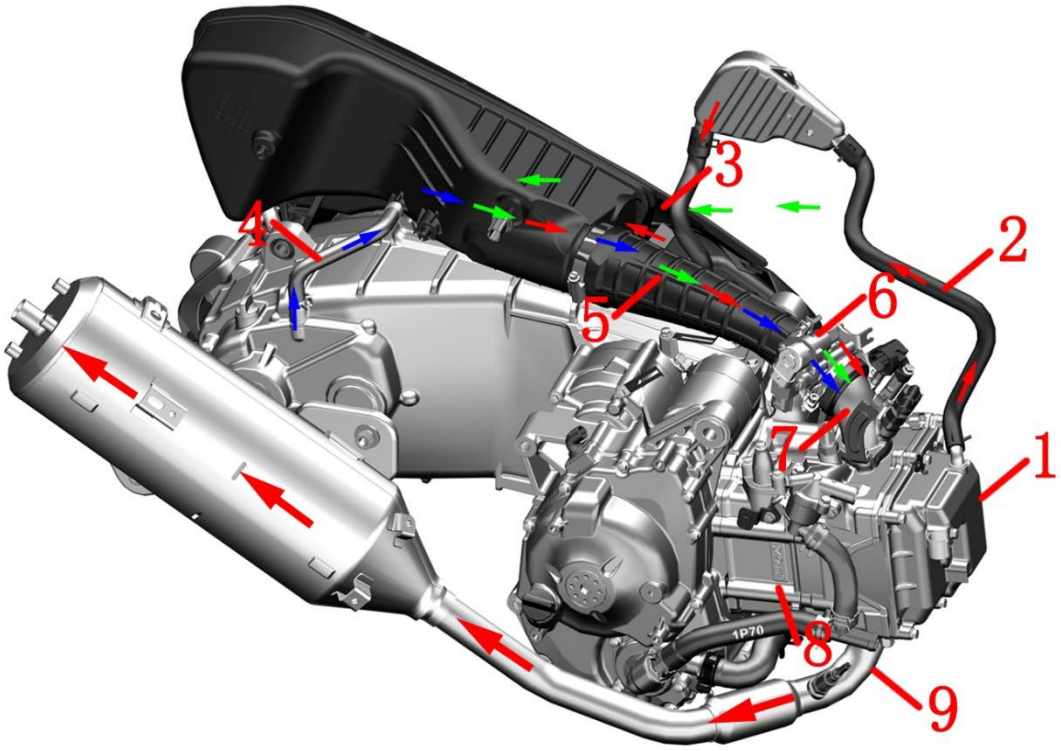

1- Cylinder head 2-Cylinder head exhaust pipe 3- Air filter intake pipe 4- Crankshaft Box exhaust pipe 5-Air filter outlet pipe 6-Throttle valve body assembly 7- Intake manifold 8-Cylinder 9- Muffler

Intake system (indicated by the green arrow):
Air → Air filter intake pipe → Air filter element → Air filter outlet pipe → Throttle valve assembly body → Intake manifold → Cylinder → Muffler

Cylinder head exhaust gas control system (red arrow indicates):
Exhaust gas → cylinder head cover →cylinder head exhaust pipe → air filter → air filter outlet pipe → throttle valve body → intake manifold → cylinder → muffler

Gearbox exhaust gas control system (indicated by the blue arrow):
Exhaust gas → gearbox exhaust pipe → air filter outlet pipe → throttle valve body → intake manifold → cylinder → muffle

9.5 M368(ETC)

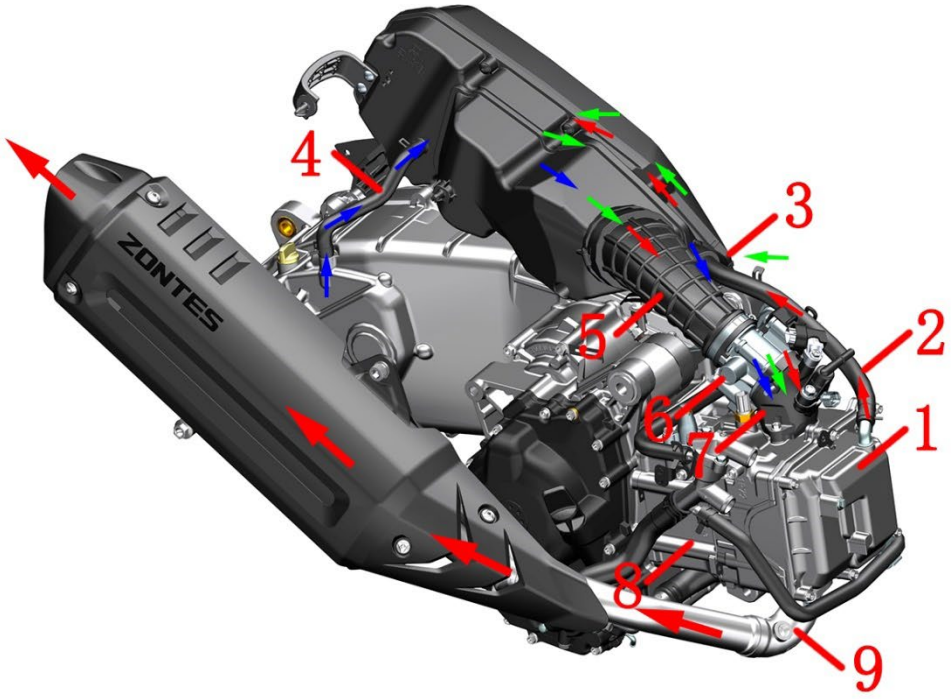

1- Cylinder head 2-Cylinder head exhaust pipe 3- Air filter intake pipe 4- Crankshaft Box exhaust pipe 5-Air filter outlet pipe 6-Throttle valve body assembly 7- Intake manifold 8-Cylinder 9- Muffler

Intake system (indicated by the green arrow):
Air → Air filter intake pipe → Air filter element → Air filter outlet pipe → Throttle valve assembly body → Intake manifold → Cylinder → Muffler

Cylinder head exhaust gas control system (red arrow indicates):
Exhaust gas → cylinder head cover →cylinder head exhaust pipe → air filter → air filter outlet pipe → throttle valve body → intake manifold → cylinder → muffler

Gearbox exhaust gas control system (indicated by the blue arrow):
Exhaust gas → gearbox exhaust pipe → air filter outlet pipe → throttle valve body → intake manifold → cylinder → muffle

Tool

			
125-piece tool set	Torque wrench	On-board tools	Claw hammer
			
Pull code	Rubber hammer	Dynamic Balancing Machine	Tire raking machine
			
Oil pan	Measuring cup	Funnel	Taps, dies
			
Micrometer	Depth gauge	Vernier caliper	Feeler gauge
			
Tire pressure gauge	Magnetic base + dial indicator	PT300 electronic spraying and writing diagnostic Speedometer（16PIN）	17#Inner hexagon

			
Hoop clamp	Internal Circlip Pliers	External circlip pliers	Clamp multimeter
			
Multimeter	Dust blow gun	M350 replace the oil filter	
Some of the above pictures are from the Internet, and the copyright belongs to the author of the original picture. Do not use it for other purposes.			

Swell nail description

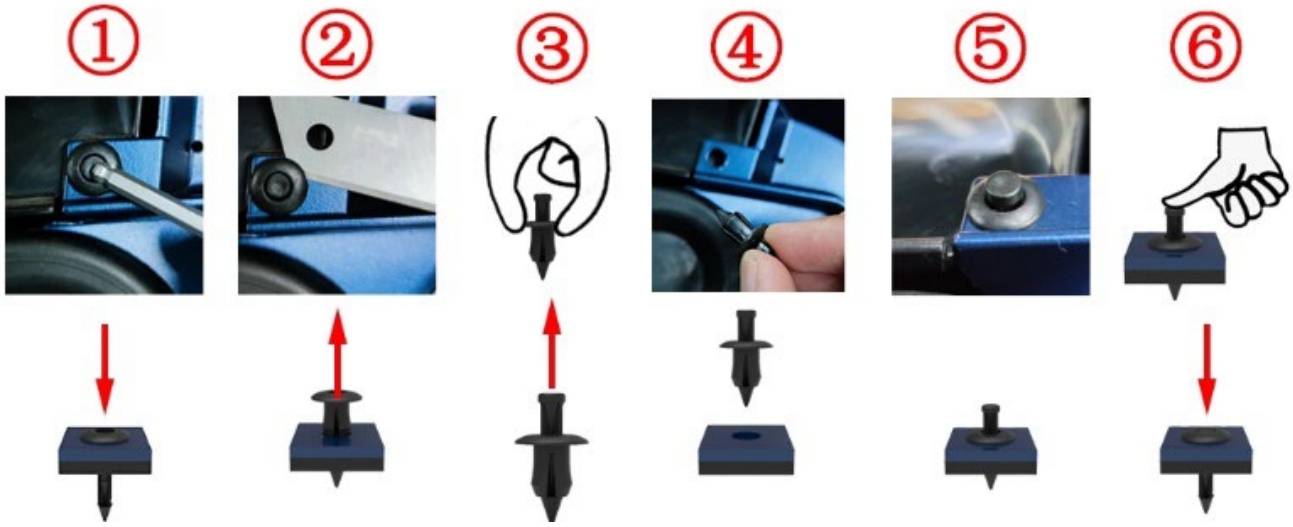

①Press down the center cylinder with 4# inner hexagon or other tools, you can hear a sound or the center cylinder moves axially by 2mm;
②Pry open the gap with a blade, nail or carving knife, etc. and remove it; if space permits, you can reach it Push out from the back;
③Pinch the outer ring with two fingers, and push the center cylinder up to the initial position;
④Pinch the center cylinder with two fingers to install the swell nails to the installation position;
⑤The outer ring is attached to the connected parts; if not attached Check whether it is misaligned;
⑥Press the center cylinder with your fingers or other tools, and you can hear a sound or the top of the center cylinder is almost flush with the top surface of the outer ring, indicating that the assembly is in place.

2. Maintenance

Know Before Service

1. Use good quality tools, or special tools and fixtures designed by our company. The use of inferior tools may cause damage to parts, peeling of plating, improper assembly, etc.
2. The O-rings, paper gaskets, copper gaskets, and component seals used for sealing must be replaced before assembly.
3. Fasteners with torque requirements need to use a torque wrench to check the torque; if the torque is not required, refer to the general torque value recommended by general fasteners.
4. Clean up before assembly; after assembly, check whether the assembly is correct and in place.
5. The vehicle should be parked balanced and pay attention to safety during disassembly and assembly. Including but not limited to the use of electric tools, hand tools, pneumatic tools, hydraulic tools, and handling. Prevent contact with skin, eyes, burns, electric shocks, etc.
6. The replaced oils, liquids, batteries, etc. must be recycled and handed over to a qualified organization for disposal; it is forbidden to dump them at will to pollute the environment or water sources.
7. Swallowing or inhaling coolant, brake fluid, etc. will cause certain harm to the human body. Any exposed skin such as hands and face should be cleaned thoroughly after each addition. If swallowed by mistake, immediately contact the poison control center or hospital; if inhaled, immediately go to a ventilated environment. If it accidentally splashes into the eyes, immediately rinse the eyes with a large amount of running water and seek medical advice or consultation in time. Keep away from children and pets.
8. If you need to clean or wash the body parts of the vehicle, you should use neutral car wash fluid or tap water, diesel, kerosene, etc. Acidic or alkaline car wash fluid will cause irreversible corrosion of the surface paint, electroplating surface, and anodized surface of the parts; gasoline will cause premature aging or hardening of sealants, gaskets, and rubber parts, reducing the service life. Non-woven fabrics should be used for wiping with no residue. Ordinary rags may leave cloth scraps or wool, etc., which may affect the assembly or cause other adverse effects.
9. The following is the instructions for disassembly and assembly of swell nails.

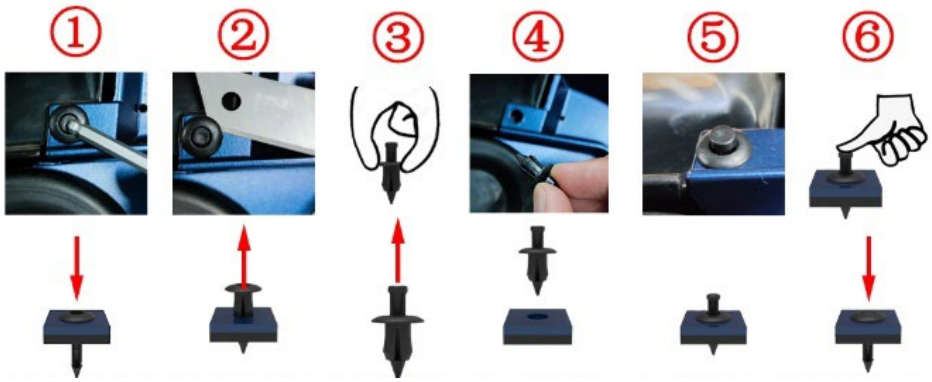

①Press the center cylinder with 4# inner hexagon or other tools, you can hear a sound or the center cylinder moves axially by 2mm (0.079 in);
②Pry open the gap with a blade, nail or carving knife, etc. and remove it; if there is space It is allowed to reach to the back to push out;
③Pinch the outer ring with two fingers and push the center cylinder up to the initial position;
④Pinch the center cylinder with two fingers to install the swell nails to the installation position;
⑤The outer ring fits the connected parts; if it does not fit, check for misalignment;
⑥ Press the center cylinder with your fingers or other tools, and you can hear a sound or the top of the center cylinder is almost flush with the top surface of the outer ring, indicating that the assembly is in place.

Tool	Multimeter	Torque Wrench
		

Only part of the basic requirements for matters needing attention, prevention of accidental injury, etc. can be listed; it is not possible to list all situations in detail. Be vigilant during disassembly and assembly to prevent accidents.

M310 Maintenance schedule

I: inspection（Inspect and clean,adjust,lubricate or replace if necessary） R:replace T： Tighten ★:Comment

Check item	Inspection before driving	km/ mile Months	Initial 1000/621 Initial 3	Every 5000/3107 Every 15	Every 10000/6214 Every 30	Replace regularly	Torque N.m/kgf.m
Cradle buffer glue			Inspection every year or 10,000 kilometers (6214 mile)				
Air filter (filter element)				I	R		
Engine air inlet filter				I	R		
Bolts and nuts of muffler			T		T		M8：22±4/2.2±0.4 M10：45±5/4.6±0.5
** Spark plug					I		
Engine oil	I					★Replace when the maintenance reminder light is flashing	
Oil filter			R		R		
* Throttle body			I		I		
* Throttle cable clearance			I	I			
Idle speed			I	I			
* Fuel evaporative pollutant control system					I		
Radiator					I		
* Fuel pipe				I	I		
V belt					I	20,000 kilometers (12427 mile)	
** Braking System			I	I			
Brake hose				I		Every 4 years	
Brake fluid				I		Every 2 years	
** Tire/Wheel bearing	I		I	I	I		
** Steering mechanism bolts and nuts			T	T			First adjust nut 15±2/1.5±0.2;the second adjust nut align the first nut
Steering bearing in Steering mechanism			Every5000km/3107mile inspection or clean or lubricate				
Front shock absorber	I				I		
Rear shock absorber	I				I		
** Bolts and nuts for body and engine installation			T	T			M12：65±5/6.6±0.5 M16：80±5/8.2±0.5
Coolant	I			I		4 years or 40,000 kilometers (24855 mile)	
Gearbox oil			R		R		
** Valve clearance (cold inspection) In: 0.08～0.12mm (0.003～0.005 in) Row: 0.18～0.22mm (0.007～0.009 in)			20,000 kilometers (12427 mile)				
Main bracket shaft							Clean and lubricate every 6000 kilometers

*This service is provided by a dealer or a qualified maintenance organization, if the owner has the appropriate tools, service information, and has a certain understanding of machinery, he can implement it by himself.

**For safety reasons, such items should be provided by dealers or qualified maintenance organizations.

★First maintenance for the first 1000 kilometers (621 mile) or 3 months (whichever comes first), second maintenance for the actual mileage of the instrument when the actual mileage reaches 5000 kilometers (3107 mile), and every 5000 kilometers (3107 mile) or 15 months thereafter (whichever comes first) Perform a regular maintenance.

M125/M125(2024) Maintenance schedule

I: inspection（Inspect and clean,adjust,lubricate or replace if necessary） R:replace T： Tighten ★: Comment

Check item	Inspection before driving	km/ mile Months	Initial 1000/621 Initial 3	Every 4000/2485 Every 6	Every 8000/4971 Every 12	Replace regularly	Torque N.m/kgf.m
Cradle buffer glue			Inspection every year or 10,000 kilometers (6214 mile)				
Air filter (filter element)			★First				
Engine air inlet filter			★First				
Bolts and nuts of muffler			T		T		M8：22±4/2.2±0.4 M10：45±5/4.6±0.5
** Spark plug					I		
Engine oil	I		★Replace when the maintenance reminder light is flashing				
Oil filter			R		R		
* Throttle body			I		I		
* Throttle cable clearance			I	I			
Idle speed			I	I			
* Fuel evaporative pollutant control system					I		
Radiator pipe				I			
* Fuel pipe				I			
V belt			Clean and check every 8000 kilometers (4971 mile)			24,000 kilometers (14913 mile)	
Driving wheel,driven wheel(clutch part)			Clean and check every 8000 kilometers (4971 mile)				
** Braking System			I	I			
Brake hose				I		Check for leaks	
Brake fluid				I		Every 2 years	
** Tire/Wheel bearing	I		I	I	I		
** Steering mechanism bolts and nuts			T	T			
Steering bearing in Steering mechanism			Every 4000km/2485mile inspection or clean or lubricate				
Front shock absorber	I				I		
Rear shock absorber	I				I		
** Bolts and nuts for body and engine installation			T	T			M12：65±5/6.6±0.5 M16：80±5/8.2±0.5
Coolant	I			I		4 years or 40,000 kilometers (24855 mile)	
Gearbox oil			R		R		
** Valve clearance (cold inspection) In: 0.08～0.12mm (0.003～0.005 in) Row: 0.12～0.16mm (0.005～0.006 in)				I			
Main bracket shaft							Clean and lubricate every 6000 kilometers

*This service is provided by a dealer or a qualified maintenance organization, if the owner has the appropriate tools, service information, and has a certain understanding of machinery, he can implement it by himself.

**For safety reasons, such items should be provided by dealers or qualified maintenance organizations.

★First:M125 2024 version:check every 3000 kilometers (1863 mile) and replace every 6000 kilometers (3726 mile).For M125 is 4000 kilometers (2485 mile) and 8000 kilometers (4971).

★Second maintenance for the first 1000 kilometers (621 mile) or 3 months (whichever comes first), second maintenance for the actual mileage of the instrument when the actual mileage reaches 4000 kilometers (2485 mile), and every 4000 kilometers (2485 mile) or 6 months thereafter (whichever comes first) Perform a regular maintenance.

M350/368/250 Maintenance schedule

I: inspection（Inspect and clean,adjust,lubricate or replace if necessary） R:replace T： Tighten ★:Comment

Check item	Inspection before driving	km/ mile	Initial 1000/621	Every 4000/2485	Every 8000/4971	Replace regularly	Torque N.m/kgf.m
		Months	Initial 3	Every 15	Every 30		
Cradle buffer glue			Inspection every year or 10,000 kilometers (6214 mile)				
Air filter (filter element)				I	R		
Engine air inlet filter				R			
Bolts and nuts of muffler			T		T		M8：22±4/2.2±0.4 M10：45±5/4.6±0.5
** Spark plug					I		
Engine oil	I					★Note1	
Oil filter			R		R		
* Throttle body			I		I		
* Throttle cable clearance			I	I			
Idle speed			I	I			
* Fuel evaporative pollutant control system					I		
Radiator					I		
* Fuel pipe				I	I		
V belt						20,000 kilometers (12427 mile)	
** Braking System			I	I			
Brake hose				I		Check for leaks	
Brake fluid				I		Every 2 years	
** Tire/Wheel bearing	I		I	I	I		
** Steering mechanism bolts and nuts				T			First adjust nut 15±2/1.5±0.2;the second adjust nut align the first nut
Steering bearing in Steering mechanism			Every 4000km/2485mile inspection or clean or lubricate				
Front shock absorber	I				I		
Rear shock absorber	I				I		
** Bolts and nuts for body and engine installation			T	T			M12：65±5/6.6±0.5 M16：80±5/8.2±0.5
Coolant	I		I	I		3 years or 30,000 kilometers (18641 mile)	
Gearbox oil			R		R		
** Valve clearance (cold inspection) In: 0.08～0.12mm (0.003～0.005 in) Row: 0.18～0.22mm (0.007～0.009 in)			20,000 kilometers (12427 mile)				
Active wheel,driven wheel					I	★Note2	
Main bracket shaft							Clean and lubricate every 6000 kilometers

*This service is provided by a dealer or a qualified maintenance organization, if the owner has the appropriate tools, service information, and has a certain understanding of machinery, he can implement it by himself.

**For safety reasons, such items should be provided by dealers or qualified maintenance organizations.

★Note1: First maintenance for the first 1000 kilometers (621 mile) or 3 months (whichever comes first), second maintenance for the actual mileage of the instrument when the actual mileage reaches 4000 kilometers (2485 mile), and every 4000 kilometers (2485 mile) or 15 months thereafter (whichever comes first) Perform a regular maintenance.

★Note2： Active and driven wheel bushings are recommended to be maintained and lubricated every 10000km (6214 mile) with Shell brand Gadus S3 V220 C2 extreme pressure grease or high temperature resistant No.2 grease of the same viscosity to ensure riding comfort. Transmission system: If it is found th at the driving speed has dropped significantly, it is recommended to maintain and inspect th e CVT transmission system at any time, and replace it in advance if necessary.

M155/150 Maintenance schedule

I: inspection（Inspect and clean,adjust,lubricate or replace if necessary） **R**:replace **T**： Tighten ★: Comment

Check item	Inspection before driving	km/ mile Months	Initial 1000/621 Initial 3	Every 4000/2485 Every 6	Every 8000/4971 Every 12	Replace regularly	Torque N.m/kgf.m
Cradle buffer glue			Inspection every year or 10,000 kilometers (6214 mile)				
Air filter (filter element)			check every 3000 kilometers (1863 mile) and replace every 6000 kilometers (3726 mile).				
Engine air inlet filter							
Bolts and nuts of muffler			T		T		M8：22±4/2.2±0.4 M10：45±5/4.6±0.5
** Spark plug					I		
Engine oil	I		★Replace when the maintenance reminder light is flashing				
Oil filter			R		R		
* Throttle body			I		I		
* Throttle cable clearance			I	I			
Idle speed			I	I			
* Fuel evaporative pollutant control system					I		
Radiator pipe				I			
* Fuel pipe				I			
V belt			Clean and check every 8000 kilometers (4971 mile)			24,000 kilometers (14913 mile)	
Driving wheel,driven wheel(clutch part)			Clean and check every 8000 kilometers (4971 mile)				
** Braking System			I	I			
Brake hose				I		Check for leaks	
Brake fluid				I		Every 2 years	
** Tire/Wheel bearing	I		I	I	I		
** Steering mechanism bolts and nuts			T	T			
Steering bearing in Steering mechanism			Every 4000km/2485mile inspection or clean or lubricate				
Front shock absorber	I				I		
Rear shock absorber	I				I		
** Bolts and nuts for body and engine installation			T	T			M12：65±5/6.6±0.5 M16：80±5/8.2±0.5
Coolant	I			I		4 years or 40,000 kilometers (24855 mile)	
Gearbox oil			R		R		
** Valve clearance (cold inspection) In: 0.08～0.12mm (0.003～0.005 in) Row: 0.12～0.16mm (0.005～0.006 in)				I			

Main bracket shaft					Clean and lubricate every 6000 kilometers

*This service is provided by a dealer or a qualified maintenance organization, if the owner has the appropriate tools, service information, and has a certain understanding of machinery, he can implement it by himself.

**For safety reasons, such items should be provided by dealers or qualified maintenance organizations.

★First:check every 3000 kilometers (1863 mile) and replace every 6000 kilometers (3726 mile).

★Second maintenance for the first 1000 kilometers (621 mile) or 3 months (whichever comes first), second maintenance for the actual mileage of the instrument when the actual mileage reaches 4000 kilometers (2485 mile), and every 4000 kilometers (2485 mile) or 6 months thereafter (whichever comes first) Perform a regular maintenance.

M368(ETC) Maintenance schedule

I: inspection（Inspect and clean,adjust,lubricate or replace if necessary） R:replace T： Tighten ★: Comment

Check item		Inspection before driving	Service Interval *1						Annual Inspection	Regularly replace
			X1000 km	1	6	12	18	24		
			X1000 mile	0.6	3.7	7.4	11.1	15		
Engine oil	☆	I		R	R	R	R	R	I	★Note 1
Oil filter	☆			R		R		R	I	
Air Filter (Filter Element)	☆☆				I	R	I	R		★Note 2
Engine Air Inlet Filter	☆☆				I	R	I	R		★Note 2
Tires	☆	I			I	I	I	I	I	Check tire pressure and tread wear
Brake Fluid	☆	I			I	I	I	I	I	Replace every 12000 km
Internal Moving Mechanism of Steering Lock	☆	I				I		I		★Note 3
Front Shock Absorbers	☆☆	I				I		R	I	Check for leaks ★Note 4
Rear Shock Absorbers	☆☆	I				I		I	I	Check for leaks
V-Belt	☆☆									Replace every 2 years or 20000 km
Bolts and Nuts in Steering Mechanism	☆☆	I		T	T	T	T	T	I	
Secondary Water Tank Level		I		I	I	I	I	I		Replace every 3 years or 30000 km
Brake Pad Wear		I			I	I	I	I	I	Check for wear
Fuel Level		I								
Idle speed		I								Check at startue
Swing Arm Buffer Rubber				I	I	I	I	I		Replace at 30000 km
Electronic Electronic Seat Fuel Tank Lock, Lock										Clean and lubricate every 4000 km
Muffer	☆				I	I	I	I	I	★Note 5
Muffler I Gearbox Oil	☆			R	R	R	R	R		
Drive Pulley, Driven Pulley, Transmission Case	☆					I		I		★Note 6-7
Fuel Pipes					I					Check for leaks
Bearings in Steering Mechanism	☆☆				I	I	I	I	I	Add grease at 15000 km
Venicle Fasteners, Bolts, Nuts	☆☆			T	T	T	T	T		

Check item		Inspection before driving	Service Interval *1						Annual Inspection	Regularly replace
			X1000 km	1	6	12	18	24		
			X1000 mile	0.6	3.7	7.4	11.1	15		
Bushings and Oil Seals of Wheels and Rear Swing Arm	☆☆			I	I	I	I	I	I	★Note 8
Spark Plug	☆☆				I	R	I	R		
Brake Hoses	☆☆					I		I	I	Check for leaks
Valve Clearance	☆☆			**Every 20000km check and adjust**						★Note 9
Air Filter Oil Collection Pipe				I	I	I	I	I		
Radiator Pipes				I	I	I	I			
Brake System						I		I	I	Check oil cue level
Main bracket shaft					I	I	I	I		Clean and lubricate every 6000 kilometers

*This service is provided by a dealer or a qualified maintenance organization, if the owner has the appropriate tools, service information, and has a certain understanding of machinery, he can implement it by himself.

**For safety reasons, such items should be provided by dealers or qualified maintenance organizations.

★Note 1: The first maintenance shall be carried out at the first 1,000 kilometers or 3 months (whichever comes first), the second maintenance shall be carried out when the actual odometer reading reaches 6,000 kilometers, and subsequent regular maintenance shall be carried out every 6,000 kilometers or 15 months (whichever comes first).

★Note 2: When driving in particularly humid or dusty areas, maintenance work should be carried out more frequently.

★Note 3: Check, clean, and lubricate every 10,000 kilometers. For details of maintenance operations, please refer to the "Maintenance Video of Handlebar Lock" on the official website.

★Note 4: Maintain the front shock absorber every 20,000 kilometers, replace the oil seal, dust seal, and shock absorber oil. Completely drain all the shock absorber oil into a measuring cup, and finally pour in 450±5ml of 32# hydraulic oil at once.

★Note 5: If the motorcycle is reversed, externally impacted, or scraped against the muffler and heat shield, first carefully check the appearance, the firmness of the mounting points, and whether the muffler buffer rubber is deformed, and whether there is air leakage after the engine idles. Internal abnormal noise or severe appearance damage usually requires replacement. All damaged parts, including the involved lifting lugs, brackets, buffer rubber, and bolts, must be replaced before continuing to ride.

★Note 6: ① It is recommended to use Shell Gadus S3 V220 C2 extreme pressure grease or high-temperature resistant No. 2 lubricating grease of the same viscosity to maintain and lubricate the driving wheel and driven wheel bushings every 12,000 kilometers to ensure riding comfort. ② Transmission system: If a significant decrease in driving speed is found, it is recommended to maintain and check the CVT transmission system at any time, and replacement should be carried out in advance if necessary. ③ Clean the dust and oil in the transmission case every 12,000 kilometers. If you are unsure about any step or lack the necessary tools, please have it handled by the Shenshi flagship store.

★Note 7: The CVT system failure caused by parts quality problems is guaranteed for 1 year or 6,000 kilometers, and the three-guarantee policy will be invalid if either limit is exceeded. Normal wear and tear of parts during vehicle use are not covered by the three-guarantee policy, and sensory phenomena that do not affect mechanical performance, such as sound and vibration, are not covered by the three-guarantee policy.

★Note 8: Check the wear of the oil seal lip, and replenish grease if necessary.

★Note 9: Valve clearance (engine in cold state) intake: 0.08～0.12mm, exhaust: 0.18～0.22mm.

Check whether the bolts of the front disc brake caliper, front shock absorber bottom tube, upper and lower yokes, disc brake rotor and rear disc brake caliper, rear wheel axle nut, rear swing arm nut, and side stand kill switch bolt are loose.



●The initial maintenance should be carried out strictly in accordance with the above table, otherwise it may cause damage to the vehicle or other unpredictable failures.

●In order to keep your vehicle running normally, it is recommended to provide services by a dealer or a qualified maintenance organization. Improper maintenance or maintenance may cause damage to the vehicle or other unpredictable failures.

●Replacement of unqualified parts will cause accelerated wear of your vehicle and shorten its service life.

●Check the brake disc, muffler, spark plug, coolant and other items after cooling down.

●Pay attention to protection when replacing brake fluid and coolant to avoid contact with skin and eyes and cause injury. At the same time, it is necessary to avoid dripping onto the surface of the parts and damaging the paint or surface.

CAUTION

●The waste generated in the maintenance process, such as cleaning agent, waste engine oil, etc., should be properly disposed of, and random dumping is prohibited to avoid environmental pollution.
●The items listed in the needle are used in regular environments. If they are often used in harsh environments, the frequency of maintenance should be increased.
●Steering system, braking system, electronic fuel injection system, shock absorber and wheels are all key components, and it is recommended to be carried out by a qualified maintenance organization.

M310/250 Air filter (filter element), air inlet filter element

Step：

1. Support the vehicle firmly

Prop up the vehicle with the main bracket and put down the side brackets, as shown in the figure.



2. Remove the left engine cover

a. Use your fingers to pull out the decorative buckle; note that vehicles produced after March 23, 2021 will only have this decorative buckle, and early-produced vehicles do not have this decorative buckle.

Use 4# inner hexagon to remove the M6×14 bolt or use T30 plum wrench to remove small flange bolt M6×16 +flanging bushing+buffer rubber as shown in the figure. The bolt here cannot be removed temporarily, just loosen it completely.





b. Use 4# inner hexagon to remove the 4 M6×14 bolts or use T30 plum wrench to remove small flange bolt M6×16 +flanging bushing+buffer rubber as shown in the figure.



c. Pull out the front part of the left engine cover first and then move it about 30mm (1.2 in) in the direction of the rear mudguard to remove it. The bolts removed in the second step will fall off at this time. Early production vehicles have the shock-proof sponge shown in the figure, if it has fallen, proceed to the next step, otherwise, remove it first. Vehicles that do not have it proceed directly to the next step.



3. Remove the air inlet cover

a. Use 4# inner hexagon to remove the M6×16 bolt or use T30 plum wrench to remove small flange bolt M6×16 as shown in the figure. The bolt here cannot be removed temporarily, just loosen it completely.

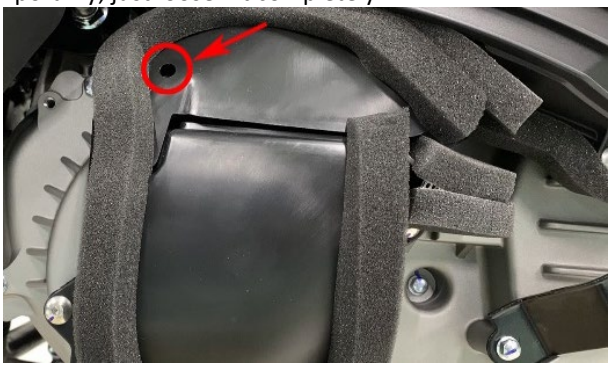

b. Use 4# inner hexagon to remove the 3 M6×14 bolts or use T30 plum wrench to remove 3 small flange bolt M6×16 +flanging bushing+buffer rubber as shown in the figure.

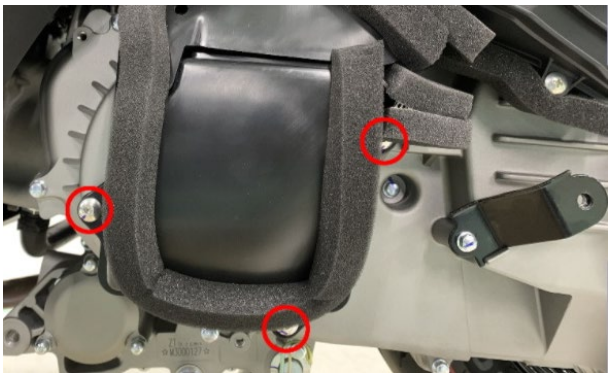

c. Remove the air inlet cover and the air inlet filter element together. Remove the rubber strip on the box.



4. Replace the air inlet filter

a. Remove the old air inlet filter element and the rubber strip on the air inlet cover. Use a blow gun to blow away the dust on the inside, then wipe the inner wall dry with a clean non-woven fabric.



b. Replace with 2 new rubber strips (one is installed in the air inlet cover, the other is installed in the box). Take out the new air inlet filter element and install it into the air inlet cover in the direction shown.

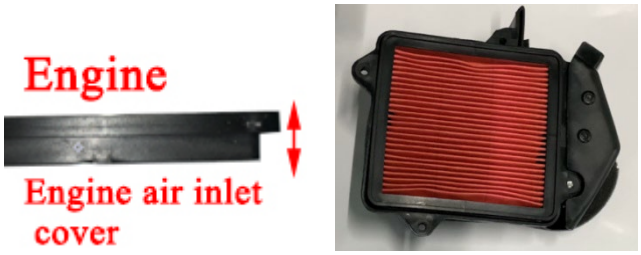

5. Remove the air filter housing

a. Use a Phillips screwdriver to remove the 9 screws that fix the housing of the air filter.

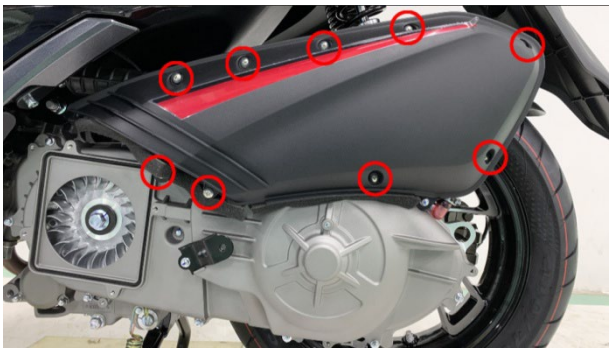

b. Remove the air filter housing.



6. Replace Air filter element

a. Use a Phillips screwdriver to remove the 6 screws that fix the filter element that comes with the air filter.



b. Remove the old air filter element. Blow the dust inside the air inlet pipe with a dust blower, and then wipe the inner wall with a clean non-woven cloth.



c. Replace the new filter element and sealing strip.

7. Inspection air filter waste oil pipe

Wipe clean the surface of the waste oil pipe and visually check for liquid. If so, use pliers to remove the waste oil pipe clamp, clean the waste oil pipe, and then reinstall it. Pay attention to increase the frequency of inspection appropriately when the air humidity is high.



8. Reinstall

a. Refer to the steps of removing the filter housing to install the housing back.

b. Replace the air inlet baffle and the air inlet cover of the replaced air inlet filter element.



c. If the original scooter has a shock-proof sponge, it needs to be placed well, if not, go to the next step.



d. Use the 4# hexagon to insert the M6×14 bolt or the small flange M6×16+ bushing + rubber pad with a T25 torx wrench at the step hole on the inside of the left hood of the engine, and then penetrate it from the outside and hold the bolt.





e. Align the left bolt with the mounting hole and tighten it.



f. Before installing other bolts, install the exposed sponge and plug it back into the left cover.



g. Use 4# inner hexagon to install the other 4 M6×14 bolts or use T30 plum wrench to install the other 4 pcs small flange bolt M6×16 +flanging bushing+buffer rubber. Replace the decorative buckle.





DANGER

●The vehicle must be parked on a flat and stable ground or a lifting platform.

●The operation can only be performed after the engine has cooled down completely.

WARNING

●The air filter element and the engine air inlet element should be replaced every 10000km (621 mile).

●The air filter element and the engine air inlet element should be cleaned regularly in accordance with the provisions of the regular maintenance and lubrication table.

●If you often ride in humid or dusty areas, you should check the air filter element more frequently. Be sure to inspect the waste oil pipe of the air filter frequently.

●If the filter element is damaged, it must be replaced, and otherwise the dirt will be directed into the engine and cause damage to the engine.

●Ensure that the filter element is assembled in place.

CAUTION

●If the air filter is clogged with dust, the air intake resistance will increase and the output power will decrease.
●If the filter element of the engine air intake is blocked by dust, the air intake resistance will increase, which will reduce the heat dissipation of the belt and affect the life of the belt.
●If the replacement period is not reached, the surface of the filter element is clean without damage, and you can use a dust blow gun to blow air from the clean side of the filter element to blow away the dust on the surface of the filter element.
●Do not let water enter the air filter when washing the vehicle.

M125 Air filter (filter element), air inlet filter element

Step：

1. Support the vehicle firmly

Prop up the vehicle with the main bracket and put down the side brackets, as shown in the figure.



2. Remove the left engine cover

a. Use your fingers to pull out the decorative buckle.
Use 4# inner hexagon to remove the M6×14 bolt or use T30 plum wrench to remove small flange bolt M6×16 +flanging bushing+buffer rubber as shown in the figure. The bolt here cannot be removed temporarily, just loosen it completely.





b. Use 4# inner hexagon to press down the center cylindrical pins of the 2 swell nails, and then remove the swell nails and the engine rear decorative cover.

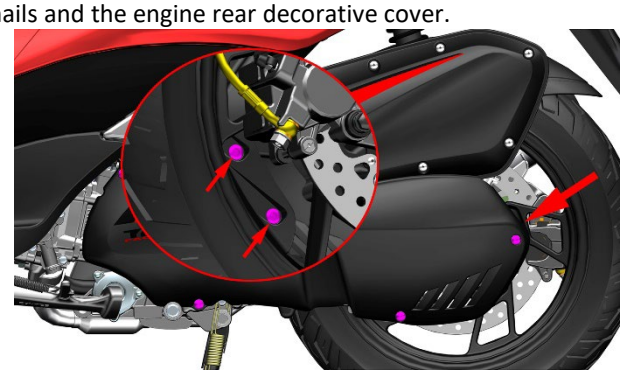

c. Use 4# inner hexagon to remove the 4 pcs Hexagon socket head screw M6×14 bolts or use T30 plum wrench to remove 4 pcs small flange bolt M6×16 +flanging bushing+buffer rubber as shown in the figure.

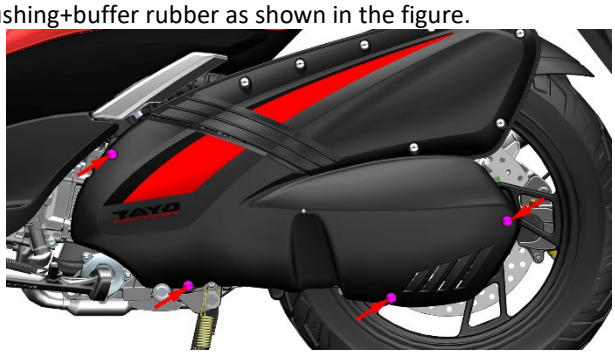

d. Remove the front part of the left engine cover. The bolts removed in the second step will fall off at this time.

3. Replace the air inlet filter

Use a corss screwdriver to remove the 4 self-tapping screws that come with the air inlet sponge filter assembly. Remove the air inlet sponge after removing the front cover. After replacing the new sponge, put the front shell back, pay attention to the screws should be installed vertically and the torque should not be too large. The air inlet sponge filter should be replaced every 8000 kilometers (4971 mile) or 12 months (whichever comes first).

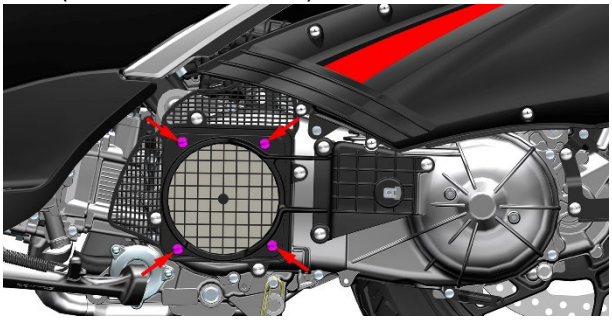

b. Remove the sponge and replace it with a new filter element. Note that the black side faces the engine and the white side faces outward



4. Remove the air filter housing

a. Use a Phillips screwdriver to remove the 9 pcs screws that fix the housing of the air filter.

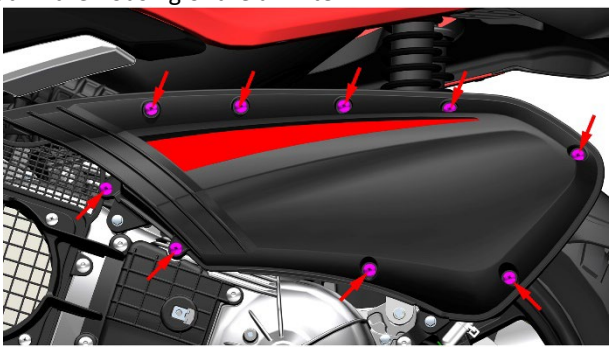

b. Remove the air filter housing.

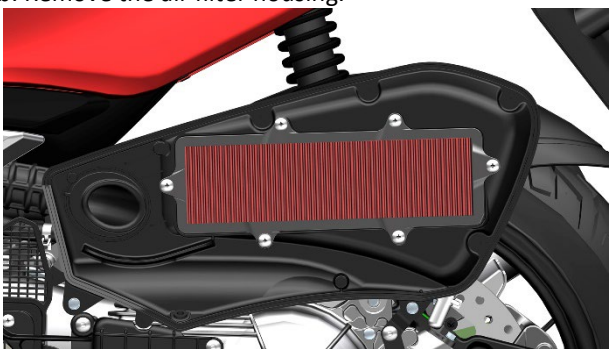

5. Replace Air filter element

a. Use a Phillips screwdriver to remove the 6 screws that fix the filter element that comes with the air filter.

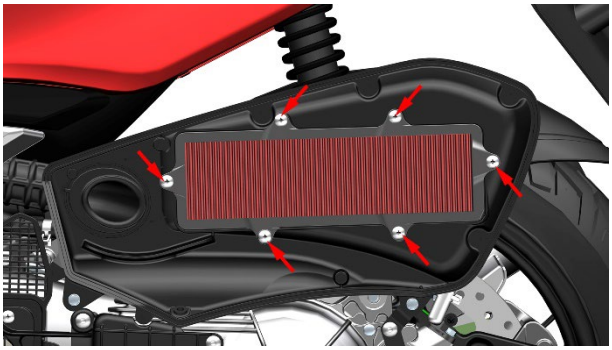

b. Remove the old air filter element. Blow the dust inside the air inlet pipe with a dust blower, and then wipe the inner wall with a clean non-woven cloth.



c. Replace the new filter element and sealing strip.

6. Inspection air filter waste oil pipe

Wipe clean the surface of the waste oil pipe and visually check for liquid. If so, use pliers to remove the waste oil pipe clamp, clean the waste oil pipe, and then reinstall it. Pay attention to increase the frequency of inspection appropriately when the air humidity is high.



7. Reinstall

a. Refer to the steps of removing the filter housing to install the housing back.

b. Replace the air inlet baffle and the air inlet cover of the replaced air inlet filter element.

c. Use the 4# hexagon to insert the M6×14 bolt or the small flange M6×16+ bushing + rubber pad with a T25 torx wrench at the step hole on the inside of the left hood of the engine, and then penetrate it from the outside and hold the bolt.





d. Align the left bolt with the mounting hole and tighten it.



e. Use 4# inner hexagon to install the other 4 M6×14 bolts or use T30 plum wrench to remove small flange bolt M6×16 +flanging bushing+buffer rubber. Replace the decorative buckle.

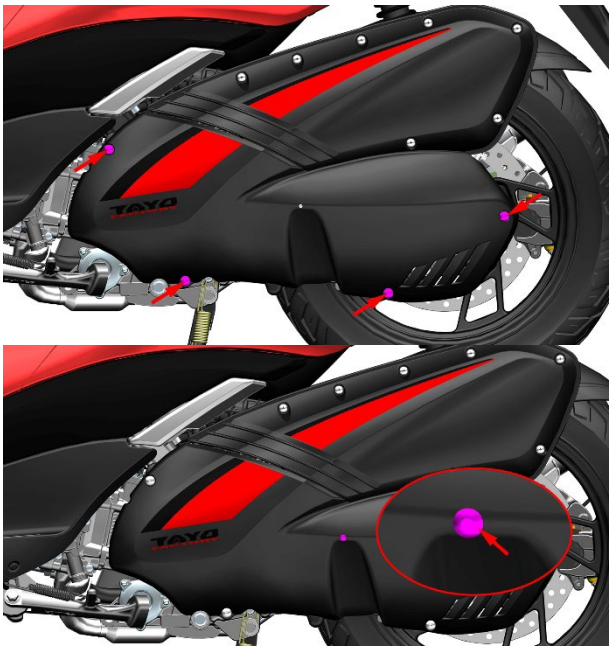

f. Reinstall the engine rear decorative cover.

DANGER

●The vehicle must be parked on a flat and stable ground or a lifting platform.
●The operation can only be performed after the engine has cooled down completely.

WARNING

●The air filter element is checked every 4000 kilometers or 6 months (whichever comes first), and replaced every 8000 kilometers or 12 months (whichever comes first).
●The air filter element and the engine air inlet element should be cleaned regularly in accordance with the provisions of the regular maintenance and lubrication table.
●If you often ride in humid or dusty areas, you should check the air filter element more frequently. Be sure to inspect the waste oil pipe of the air filter frequently.
●If the filter element is damaged, it must be replaced, otherwise the dirt will be directed into the engine and cause damage to the engine.
●Ensure that the filter element is assembled in place.

CAUTION

●If the air filter is clogged with dust, the air intake resistance will increase and the output power will decrease.
●If the filter element of the engine air intake is blocked by dust, the air intake resistance will increase, which will reduce the heat dissipation of the belt and affect the life of the belt.
●If the replacement period is not reached, the surface of the filter element is clean without damage, and you can use a dust blow gun to blow air from the clean side of the filter element to blow away the dust on the surface of the filter element.
●Do not let water enter the air filter when washing the vehicle.

M125(2024) Air filter (filter element), air inlet filter element

Step：

1. Support the vehicle firmly

Prop up the vehicle with the main bracket and put down the side brackets, as shown in the figure.



2. Remove the left engine cover

a. Buckle the rubber plug pointed to by the arrow, and then use the 4# hexagon to remove the M6×14 bolt or T25 torx wrench to remove the small flange M6×16 + bushing + rubber pad, the bolt here can not be removed temporarily, and it can be completely loosened. Use 4# hexagon to remove the 4 M6×14 bolts or T25 torx wrenches shown in the figure, and remove the 4 small flanges M6×16 + bushing + rubber pads

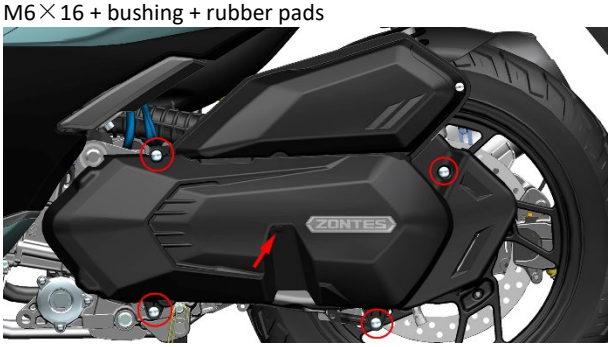

3. Remove the air intake cover

Use a corss screwdriver to remove the 5 self-tapping screws that come with the air inlet sponge filter assembly. Remove the air inlet sponge after removing the front cover. After replacing the new sponge, put the front shell back, pay attention to the screws should be installed vertically and the torque should not be too large. The air inlet sponge filter should be replaced every 6000 kilometers (3728 mile) or 12 months (whichever comes first).

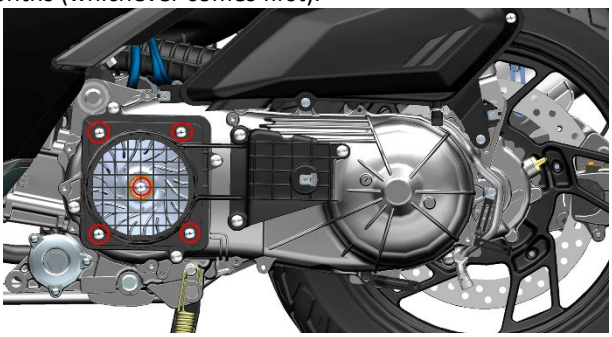

4. Replace the air inlet filter element

a. Remove the sponge and replace it with a new filter element. Note that the black side faces the engine and the white side faces outward



5. Replace Air filter element

a. Use a Phillips screwdriver to remove the bolt, remove the Air filter element cover.



b. Remove the old air filter element. Blow the dust inside the air inlet pipe with a dust blower, and then wipe the inner wall with a clean non-woven cloth.

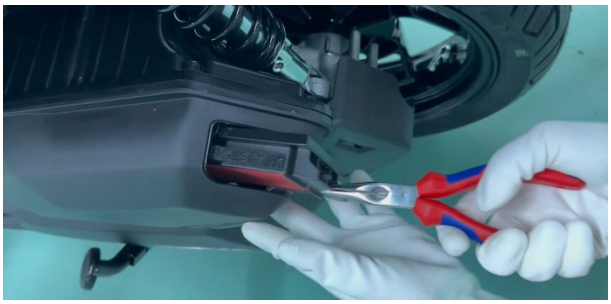

c. Replace the new filter element and sealing strip.

6. Inspection air filter waste oil pipe

Wipe clean the surface of the waste oil pipe and visually check for liquid. If so, use pliers to remove the waste oil pipe clamp, clean the waste oil pipe, and then reinstall it. Pay attention to increase the frequency of inspection appropriately when the air humidity is high.

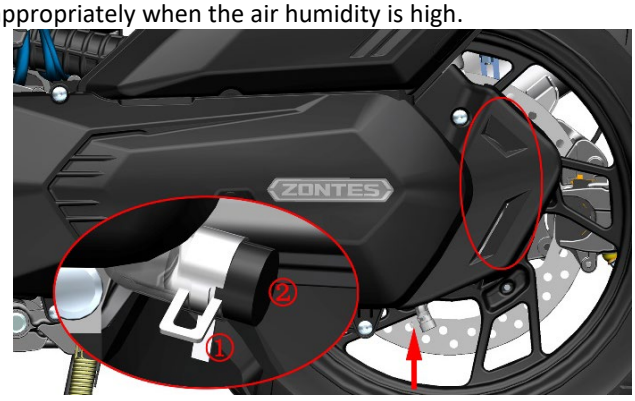

7. Reinstall

a. Refer to the steps of removing the filter housing to install the housing back.

b. Replace the air inlet baffle and the air inlet cover of the replaced air inlet filter element.

c. Use the 4# hexagon to insert the M6×14 bolt or the small flange M6×16+ bushing + rubber pad with a T25 torx wrench at the step hole on the inside of the left hood of the engine, and then penetrate it from the outside and hold the bolt.

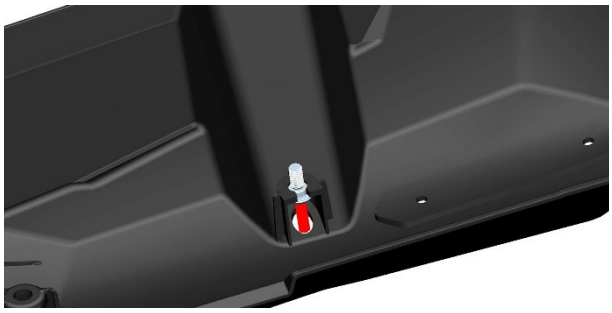

d. Align the left bolt with the mounting hole and tighten it.Put the 4 bolts back in with the 4# inner hexagon or or use T30 plum wrench to install 4 small flange bolt M6×16 +flanging bushing+buffer rubber.

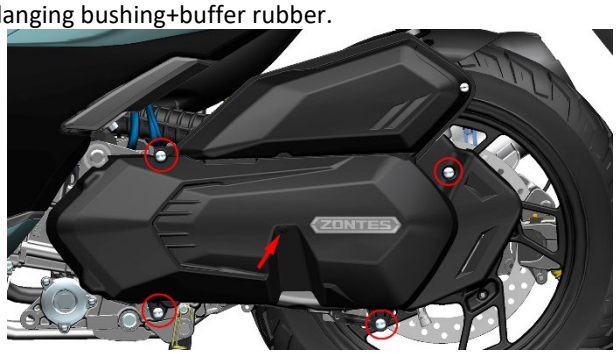

DANGER

●The vehicle must be parked on a flat and stable ground or a lifting platform.
●The operation can only be performed after the engine has cooled down completely.

WARNING

●The air filter element is checked every 3000 kilometers or 6 months (whichever comes first), and replaced every 6000 kilometers (3728 mile) or 12 months (whichever comes first).
●The air filter element and the engine air inlet element should be cleaned regularly in accordance with the provisions of the regular maintenance and lubrication table.
●If you often ride in humid or dusty areas, you should check the air filter element more frequently. Be sure to inspect the waste oil pipe of the air filter frequently.
●If the filter element is damaged, it must be replaced, otherwise the dirt will be directed into the engine and cause damage to the engine.
●Ensure that the filter element is assembled in place.

M350 Air filter (filter element), air inlet filter element

Step：

1. Support the vehicle firmly

Prop up the vehicle with the main bracket and put down the side bracket, as shown in the picture.



2. Remove the left engine cover

a. Press the center cylindrical pins of the four expansion nails at the inner part of the back with 4# hex, and remove the three expansion nails on the bottom plate of the decorative cover of the air filter. Remove the expansion nail from the rear top surface.

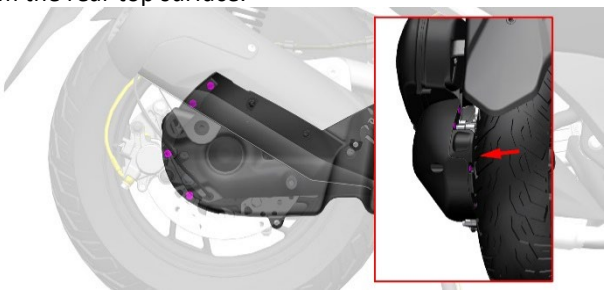

Remove the expansion nails from the top of the front part.

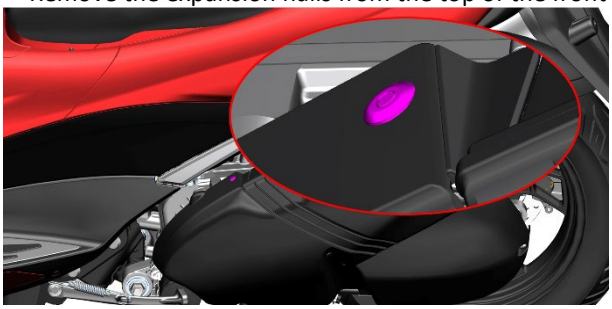

b. Use 4# inner hexagon to remove the M6×14 bolt or use T30 plum wrench to remove small flange bolt M6×16 +flanging bushing+buffer rubber as shown in the figure.

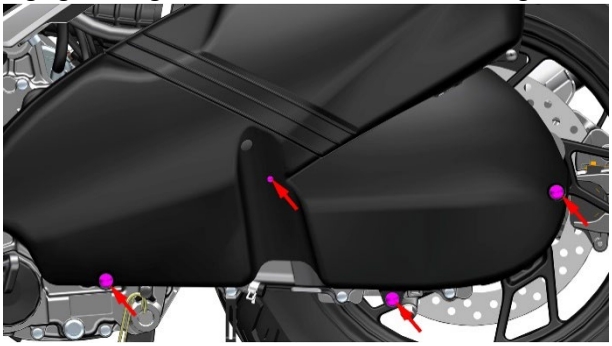

c. Pull out the three mushroom buttons on air filter decoration cover and remove the air filter decoration cover.



3. Replace the air inlet filter element

a. Use a Phillips screwdriver to remove the four tapping nails delivered with the air intake sponge filter assembly. Remove the air intake sponge after removing the front shell. Install the front shell back after replacing with new sponge. Pay attention to install the screws vertically and the torque should not be too large. The air intake sponge filter element is replaced every 4000 km (2485mile) or 15 months (whichever is reached first).

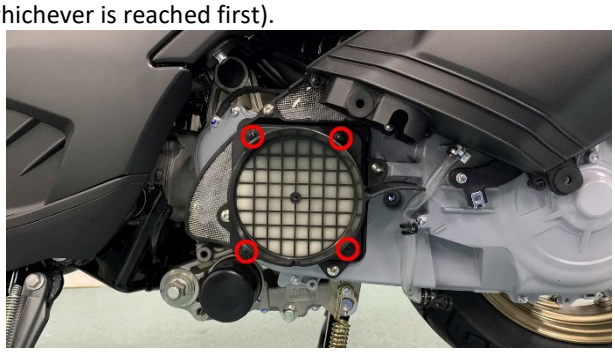

b. Remove the sponge and replace it with a new filter element. Note that the black side faces the engine and the white side faces out.



4. Remove the air filter shell

a. Push 2 pieces of decorative glue inside the air filter with 4# hex.



b. Use a Phillips screwdriver to remove the two tapping nails.



c. Use a Phillips screwdriver to remove the four screws that secure the cover of the air filter.



d. Remove the shell of the air filter.



e. Place the rubber plug and tapping nail properly to avoid loss.

5. Replace the filter element of the air filter

a. Use a Phillips screwdriver to remove the six screws used to secure the filter element from the air filter.

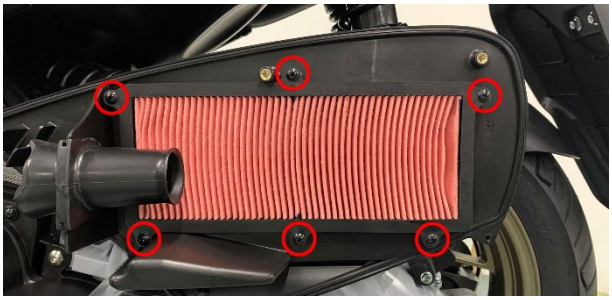

b. Remove the old empty filter element. Use the dust blower gun to clean the dust inside the inlet pipe and then wipe the inner wall clean with a clean non-woven cloth.

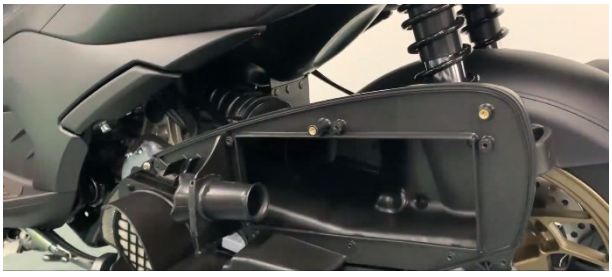

c. Replace the filter element and seal with a new one.

6. Check the waste oil pipe of air filter

After removing the rubber plug, use a flashlight to polish it from the bottom according to the arrow direction, and observe whether the waste oil drain pipe accumulates dirt or water through the rubber plug hole.If yes, use pliers to remove the waste oil pipe clamp ①, pull out the black plug, and then install it again after draining the waste oil or sewage.Pay attention to increase the inspection frequency when the air humidity is high. If there is too much dirt in the hose, be sure to check whether there is too much dirt or damage in the air filter element, and replace the air filter element if necessary.

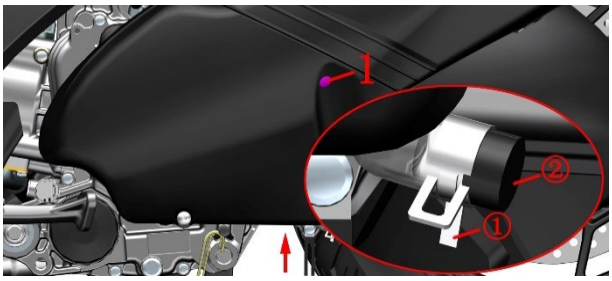

7. Reassembly

a. Refer to the procedure for removing the air filter housing to reassemble it.

b. Use the 4# hexagon to insert the M6×14 bolt or the small flange M6×16+ bushing + rubber pad with a T25 torx wrench at the step hole on the inside of the left hood of the engine, and then penetrate it from the outside and hold the bolt.



c. Align the bolts to the mounting holes and tighten them.



d. Install the other three M6x14 bolts using the 4# hex socket or use T30 plum wrench to install the other 3 small flange bolt M6×16 +flanging bushing+buffer rubber.

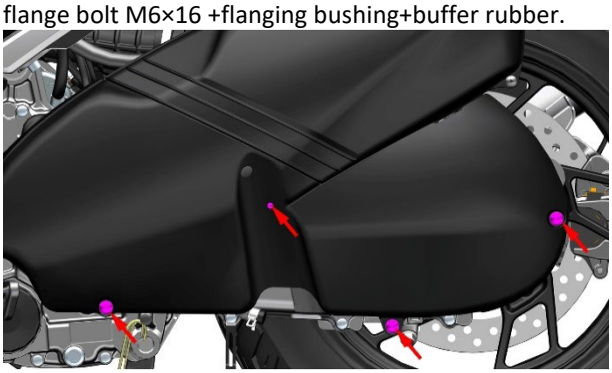

DANGER

●The vehicle must be parked on a flat and stable ground or a lifting platform.

●The operation can only be performed after the engine has cooled down completely.

WARNING

●The air filter element is checked every 4000 kilometers or 15 months (whichever comes first), and replaced every 8000 kilometers or 30 months (whichever comes first). The air inlet sponge filter should be replaced every 4000 kilometers or 15 months (whichever comes first).
●The air filter element and the engine air inlet element should be cleaned regularly in accordance with the provisions of the regular maintenance and lubrication table.
●If you often ride in humid or dusty areas, you should check the air filter element more frequently. Be sure to inspect the waste oil pipe of the air filter frequently.
●If the filter element is damaged, it must be replaced, otherwise the dirt will be directed into the engine and cause damage to the engine.
●Ensure that the filter element is assembled in place.

⚠CAUTION

●If the air filter is clogged with dust, the air intake resistance will increase and the output power will decrease.
●If the filter element of the engine air intake is blocked by dust, the air intake resistance will increase, which will reduce the heat dissipation of the belt and affect the life of the belt.
●If the replacement period is not reached, the surface of the filter element is clean without damage, and you can use a dust blow gun to blow air from the clean side of the filter element to blow away the dust on the surface of the filter element.
●Do not let water enter the air filter when washing the vehicle.

M155 air filter (filter element), air inlet filter element

Steps:

1. Support the vehicle firmly

Support the vehicle with the main support and put down the side support as shown in the figure.



2. Remove the left engine cover

A. Buckle the rubber plug pointed to by the arrow, and then use the 4# hexagon to remove the M6×14 bolt or T25 torx wrench to remove the small flange M6×16 + bushing + rubber pad, the bolt here can not be removed temporarily, and it can be completely loosened. Use 4# hexagon to remove the 4 M6 ×14 shoulder bolts or T25 torx wrenches shown in the figure, and remove the 4 small flanges M6×16 + bushing + rubber pads.

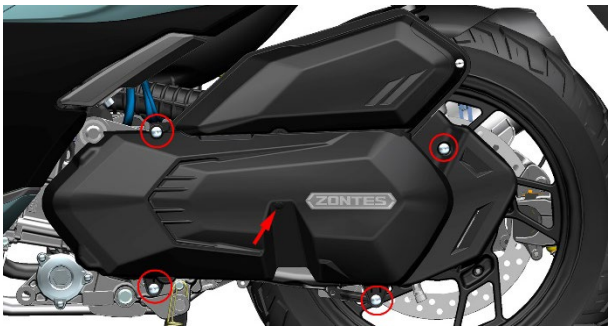

3. Remove the air inlet cover

A. Remove 5 self-tapping screws of the air inlet sponge filter element assembly with a cross screwdriver. Remove the sponge from the air inlet after removing the front cover.Replace the new sponge and re-install the front cover. Note that the screws should be installed vertically and the torque should not be too large.Check the sponge filter element at the air inlet every 3000 kilometers (1864 mile) or 6 months (whichever comes first).Replace every 6000 km (3728 mile) or 12 months, whichever comes first.

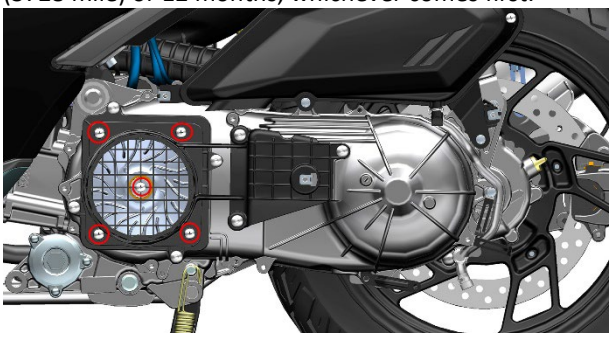

4. Replace the filter element of the air inlet

A. Remove the sponge and replace it with a new filter element. Note that the black side faces the engine and the white side faces outward.



5. Replace the air filter element

A. Remove the bolt with spring washer on the air filter with a cross screwdriver, and remove the filter element cover of the air filter.



B. Remove the old air filter element with needle-nose pliers. Use a dust gun to clean the dust on the inside of

the intake pipe, and then use a clean non-woven fabric to clean the inner ground.



C. Apply a proper amount of lubricating grease on the rubber ring of the new air filter element, and then install it back according to the steps.

6. Check the waste oil pipe of the air filter

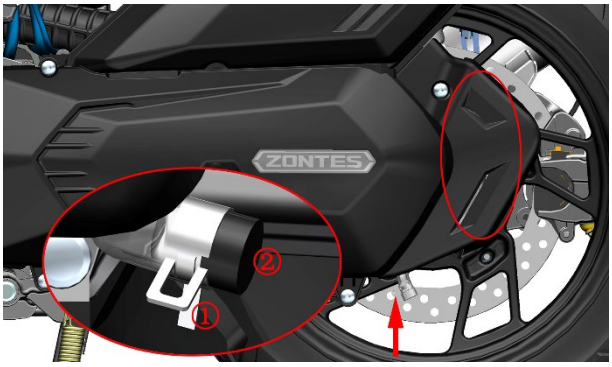

7. Reassembly

A. Use the 4# hexagon to insert the M6×14 bolt or the small flange M6×16+ bushing + rubber pad with a T25 torx wrench at the step hole on the inside of the left hood of the engine, and then penetrate it from the outside and hold the bolt.

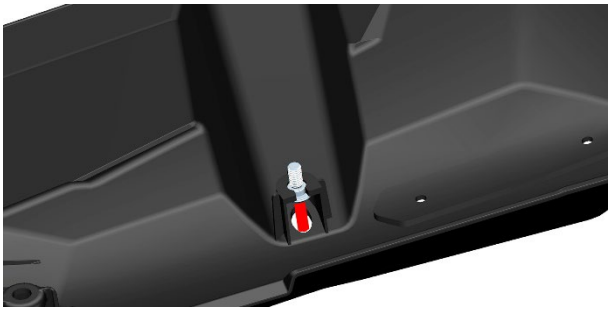

B. Align the bolt with the mounting hole and tighten it. Re-install the other 4 M6 × 14 bolts with 4 # hexagon socket or use T30 plum wrench to install 4 small flange bolt M6×16 +flanging bushing+buffer rubber, and put the rubber plug in.

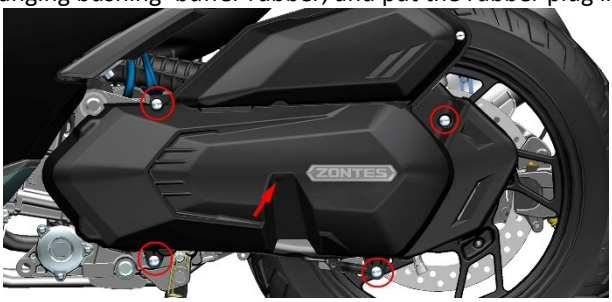

M368 Air filter (filter element), air inlet filter element

Step：

1. Support the vehicle firmly

Prop up the vehicle with the main bracket and put down the side bracket, as shown in the picture.



2. Remove the left engine cover

a. Press the center cylindrical pins of the expansion nail at the inner part of the back with 4# hex, and remove the the expansion nail. Remove the expansion nails from the top of the front part.

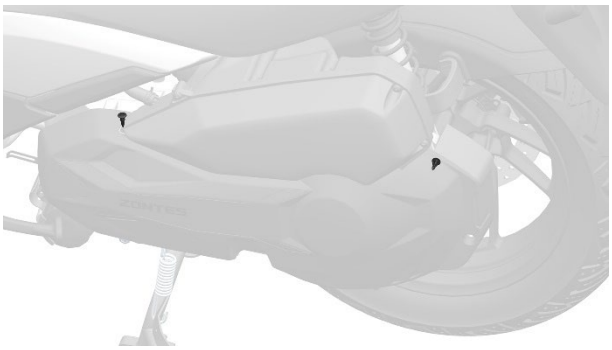

b. Remove the four hexagon M6x14 bolts shown with the 4# hex socket or T30 plum wrench to remove small flange bolt M6×16 +flanging bushing+buffer rubber.

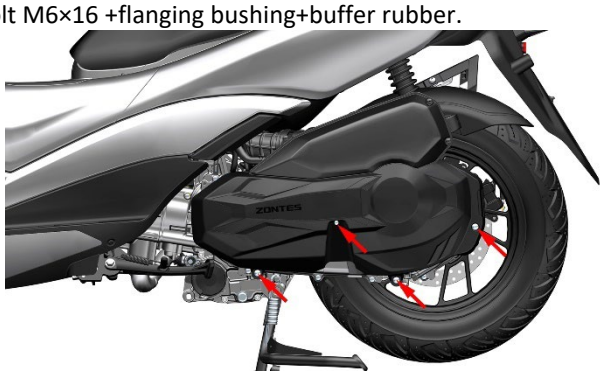

c. Pull out the two mushroom buttons on air filter decoration cover and remove the air filter decoration cover.

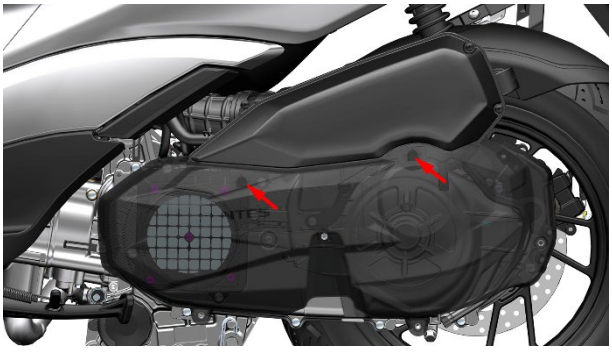

3. Replace the air inlet filter element

a. Use a Phillips screwdriver to remove the five tapping nails delivered with the air intake sponge filter assembly. Remove the air intake sponge after removing the front shell. Install the front shell back after replacing with new sponge. Pay attention to install the screws vertically and the torque should not be too large. The air intake sponge filter element is replaced every 4000 km (2485mile) or 15 months (whichever is reached first).

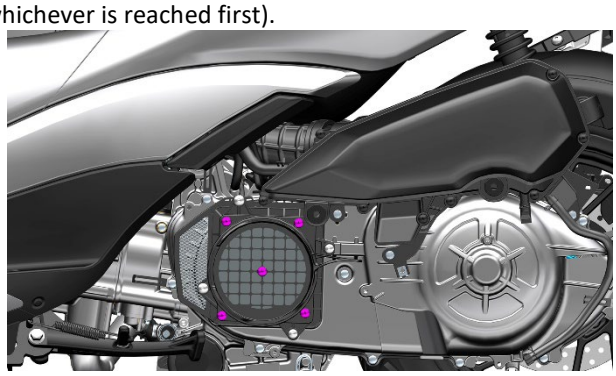

b. Remove the sponge and replace it with a new filter element. Note that the black side faces the engine and the white side faces out.



4. Remove the air filter shell

a. Use a Phillips screwdriver to remove the ten tapping nails.

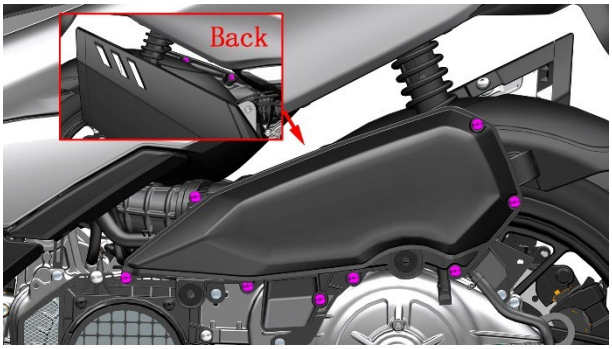

b. Remove the shell of the air filter.

5. Replace the filter element of the air filter

a. Use a Phillips screwdriver to remove the four screws used to secure the filter element from the air filter.

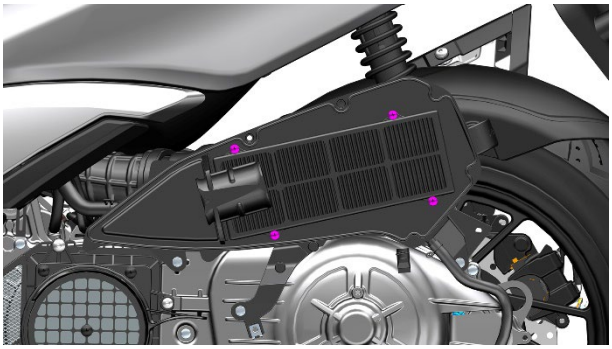

b. Remove the old empty filter element. Use the dust blower gun to clean the dust inside the inlet pipe and then wipe the inner wall clean with a clean non-woven cloth.

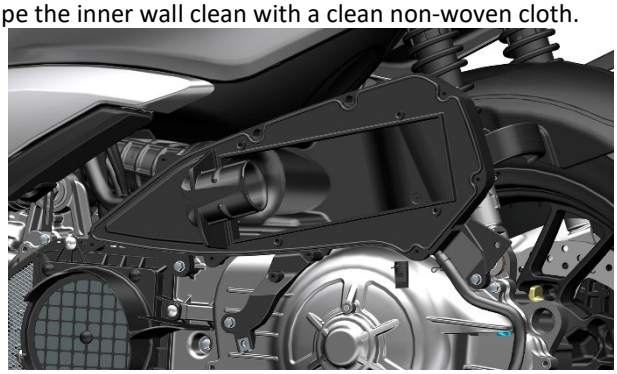

c. Replace the filter element and seal with a new one.

6. Check the waste oil pipe of air filter

After removing the rubber plug, use a flashlight to polish it from the bottom according to the arrow direction, and observe whether the waste oil drain pipe accumulates dirt or water through the rubber plug hole.If yes, use pliers to remove the waste oil pipe clamp ①, pull out the black plug, and then install it again after draining the waste oil or sewage.Pay attention to increase the inspection frequency when the air humidity is high. If there is too much dirt in the hose, be sure to check whether there is too much dirt or damage in the air filter element, and replace the air filter element if necessary.

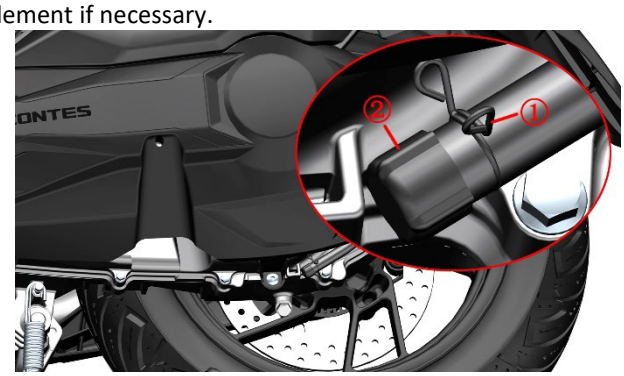

7. Reassembly

Refer to the procedure for removing the air filter housing to reassemble it.

M368(ETC) Air filter (filter element), air inlet filter element

Step：

1. Support the vehicle firmly

Prop up the vehicle with the main bracket and put down the side bracket, as shown in the picture.



2. Remove the left engine cover

a. Press the center cylindrical pins of the expansion nail at the inner part of the back with 4# hex, and remove the the expansion nail. Remove the expansion nails from the top of the front part.

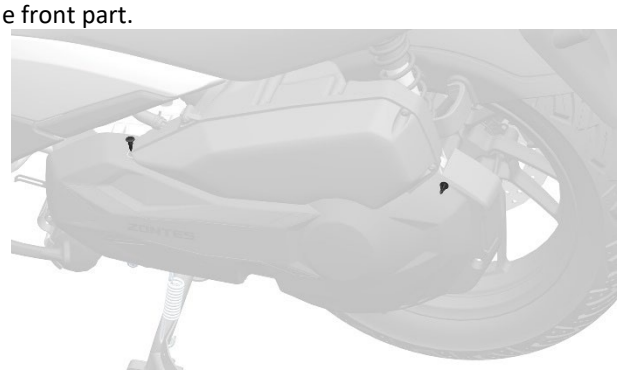

b. Use a T30 Torx wrench to remove 4 small flange M6×16 bolts + bushings + rubber gaskets.

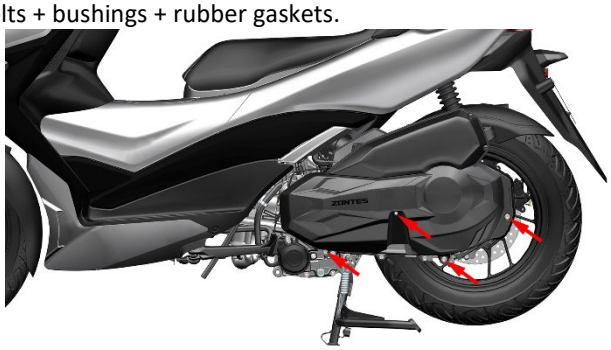

c. Pull out the two mushroom buttons on air filter decoration cover and remove the air filter decoration cover.

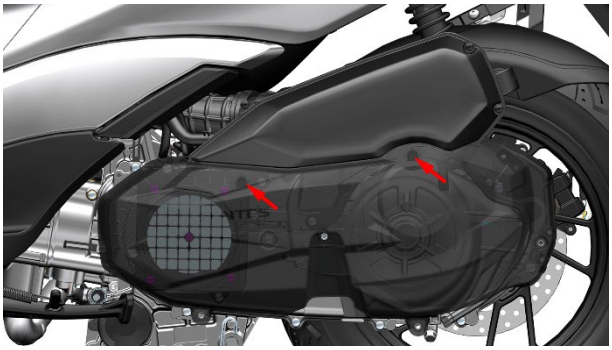

3. Replace the air inlet filter element

a. Use a Phillips screwdriver to remove the five tapping nails delivered with the air intake sponge filter assembly. Remove the air intake sponge after removing the front shell. Install the front shell back after replacing with new sponge. Pay attention to install the screws vertically and the torque should not be too large. The air intake sponge filter element is replaced every 6000 km (3728miles) or 15 months (whichever is reached first).

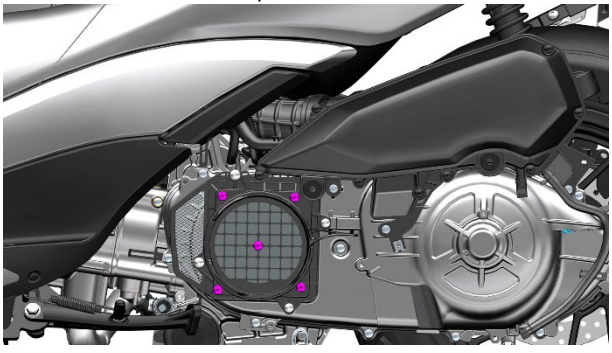

b. Remove the sponge and replace it with a new filter element. Note that the black side faces the engine and the white side faces out.



4. Remove the air filter shell

a. Use a Phillips screwdriver to remove the ten tapping nails.

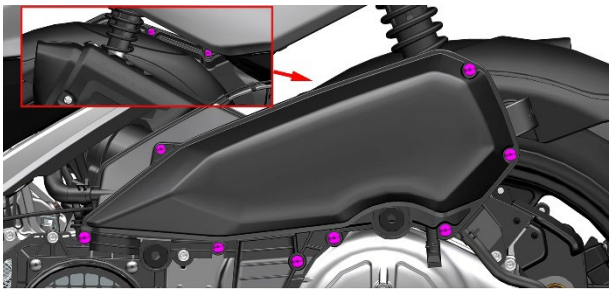

b. Remove the shell of the air filter.

5. Replace the filter element of the air filter

a. Use a Phillips screwdriver to remove the four screws used to secure the filter element from the air filter.

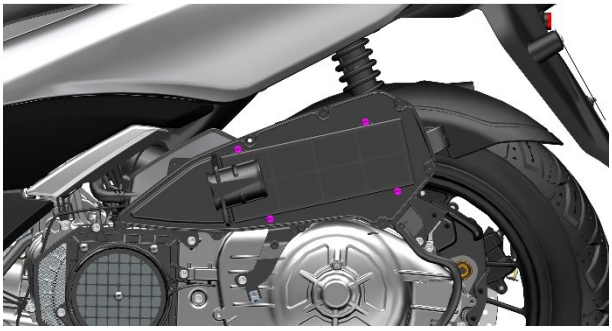

b. Remove the old empty filter element. Use the dust blower gun to clean the dust inside the inlet pipe and then wipe the inner wall clean with a clean non-woven cloth.

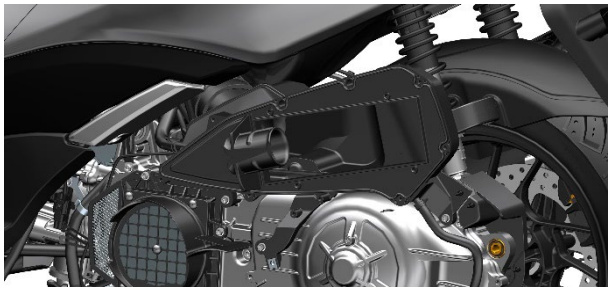

c. Replace the filter element and seal with a new one.

6. Check the waste oil pipe of air filter

After removing the rubber plug, use a flashlight to polish it from the bottom according to the arrow direction, and observe whether the waste oil drain pipe accumulates dirt or water through the rubber plug hole.If yes, use pliers to remove the waste oil pipe clamp ①, pull out the black plug, and then install it again after draining the waste oil or sewage.Pay attention to increase the inspection frequency when the air humidity is high. If there is too much dirt in the

hose, be sure to check whether there is too much dirt or damage in the air filter element, and replace the air filter element if necessary.

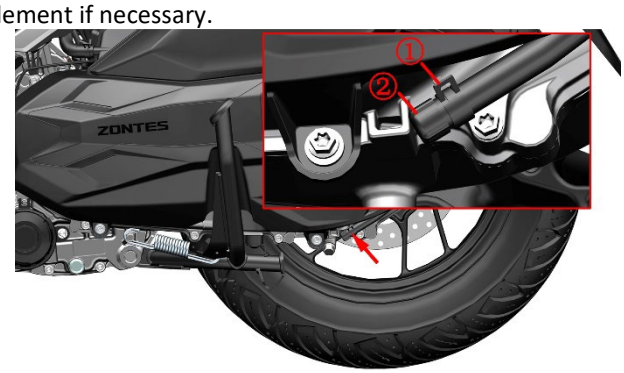

7. Reassembly

Refer to the procedure for removing the air filter housing to reassemble it.

Bolts and nuts of muffler

1. Check for air leaks at the engine exhaust.

The models Ⅰ:



The models Ⅱ:



The models Ⅲ:



Euro Ⅴ+(125/155/350)

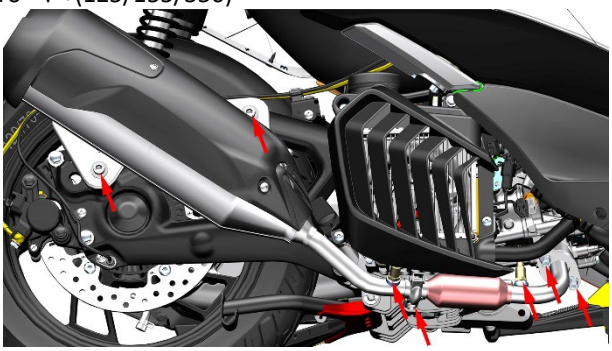

368CC

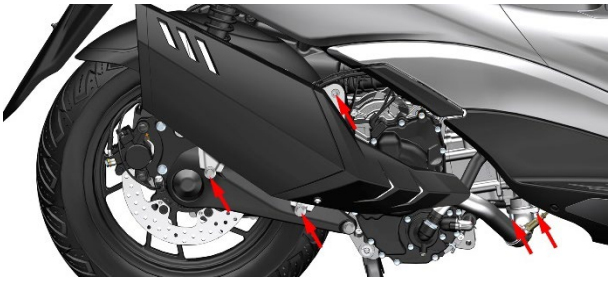

368 ETC



a. If there is a slight air leak, first try to tighten the exhaust port nut with 6# inner hexagon; if the problem is not solved, remove the muffler and replace with a new engine exhaust port gasket.

b. If there is no sign of air leakage, use 6# inner hexagon to check whether the M8 nut at the exhaust port of the engine is loose. Torque: 25N.m (26kgf.m, 18 lbf.ft)

2. Check for nut and bolts at the muffler

2.1 The models Ⅰ

Use the 14# sleeve to inspection whether the 3 pcs bolts at the junction of the rear muffler and the swingarm are loose. Torque: 53N.m (5.4kgf.m, 39 lbf.ft)

2.2 The models Ⅱ

Use the 14# sleeve to inspection whether the 2 pcs bolts at the junction of the rear muffler and the swingarm are loose. Torque: 53N.m (5.4kgf.m, 39 lbf.ft)

2.3 The models Ⅲ and M125/150/250/350/368:

Check whether the bolts connecting the silencing chamber of the silencer to the rear swing arm are loose using an 8# hexagon socket. Standard torque: 53 N.m.

2.4 M368 (ETC) Muffler:

Use a 13# socket to check the bolts at the connection between the rear section of the muffler and the rear swing arm, and use a 13# socket to check the bolts at the upper connection. Standard torque: 53 N.m

DANGER

●Do not touch all metal surfaces of the muffler while the engine is running or after riding to prevent burns.

●The vehicle must be parked on a flat and stable ground or a lifting platform.

●If you need to replace the new exhaust port gasket, you must wait for the muffler to cool down completely before starting operation.

WARNING

●Do not blast the throttle for a long time on the spot.

●Large load and long-term low-speed driving will damage the engine and muffler.

●It is forbidden to use leaded gasoline to avoid the loss of exhaust gas purification ability due to catalyst failure.

CAUTION

●If you need to remove the muffler for other operations, it is recommended to cover the air inlet and outlet holes of the muffler with textured paper to prevent foreign objects from entering.

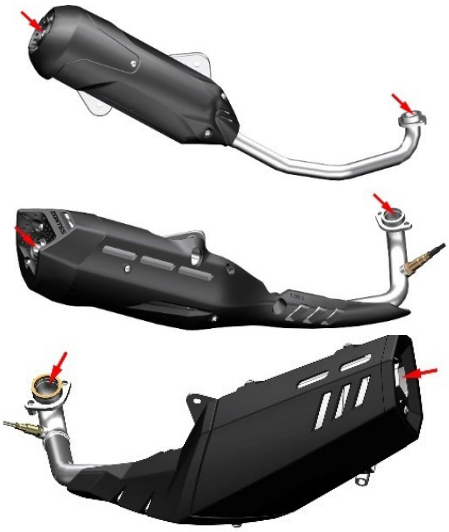



●Keep the drain hole at the bottom of the muffler unblocked to prevent condensation water from accumulating in the muffler cavity.



●Clean up the dirt, dirt and other stains on the surface of the muffler in time.

M310/350/368/250 Spark plug

Caution:

●Before disassembling, blow off the dust near the spark plug with a dust blower.

●After removing the spark plug, prevent foreign objects from falling into the engine.

●The M350/368/250/368(ETC) steps are similar to the M310, taking the M310 as an example.

1. Disassemble the spark plug

a. Put down the left rear pedal and use the 4# inner hexagon to remove the M6×14 bolts.

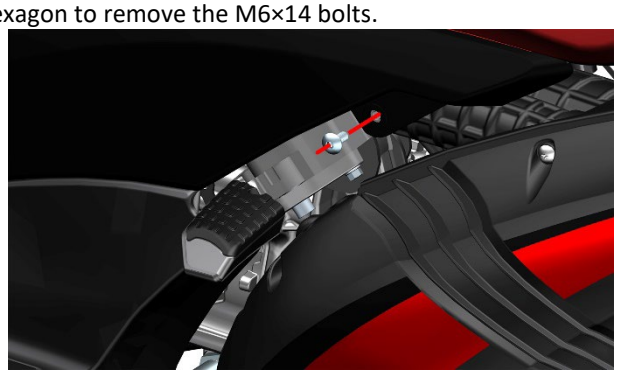

b. Pull out in sequence in the direction of the arrow (from the rear wheel to the front wheel). Note that there are 5 staples at the red circle and a circle of buckles around. It takes a lot of force to pull out.

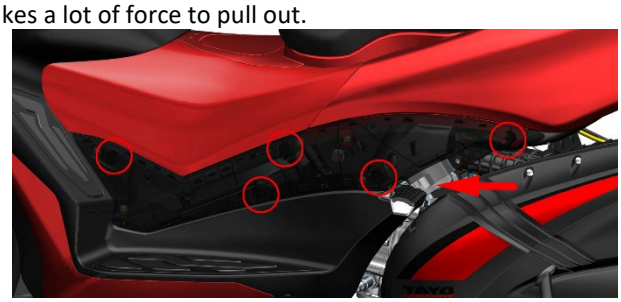

c. Use your fingers or a plastic crowbar to insert the arrow indication point, first pry the arrow indication point open the gap and then pull up.



d. Respectively use 4# inner hexagon to remove the 2 M6×12 bolts at the front pedal.

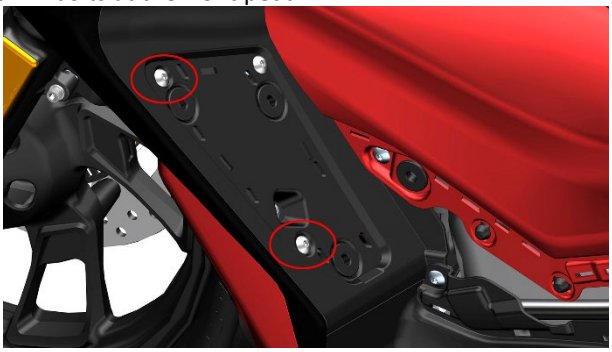

e. Use 4# inner hexagon to remove the 3 M6×14 bolts that surround the left side(1).

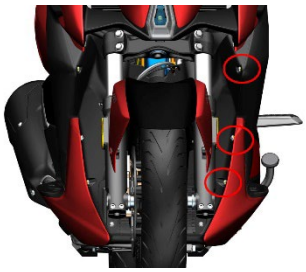

f. Use your fingers or a plastic crowbar to forcefully break out from the arrow point until the bolt near the arrow point is exposed. Because there are still bolts on the upper part that have not been removed, it cannot be removed directly.



g. Use 5# inner hexagon to remove M6×14 bolt, then remove bushing.

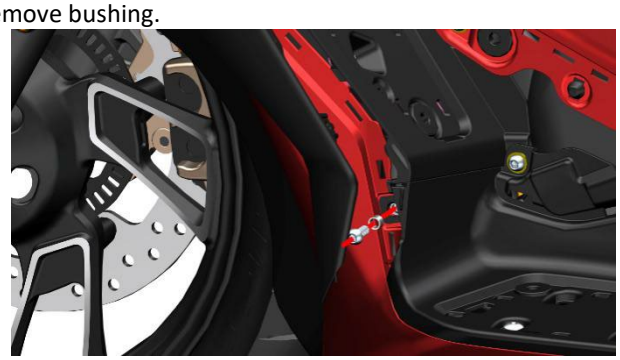

h. Use 4# inner hexagon to remove 7pcs M6×14 bolts.

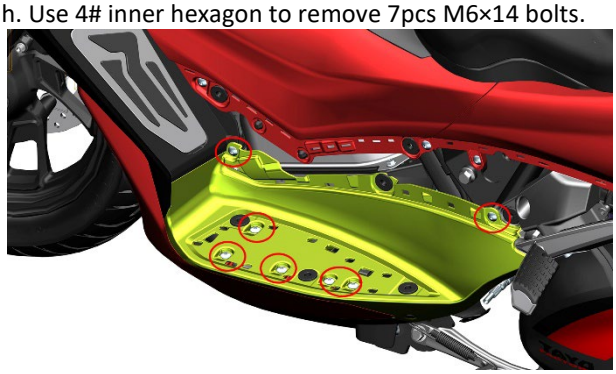

i. Use 4# inner hexagon to press down the center cylindrical pins of the 4 swell nails on the left, and then remove the swell nails. Remove the bolt on the left front part with a 4# inner hexagon for instructions on disassembly and assembly of swell nails, please refer to the pre-service instructions in this chapter. M310 vehicles produced before May 18, 2022 have 4 expansion nails on the left side, and vehicles after that have 3 expansion nails; those produced on May 18 should be distinguished.

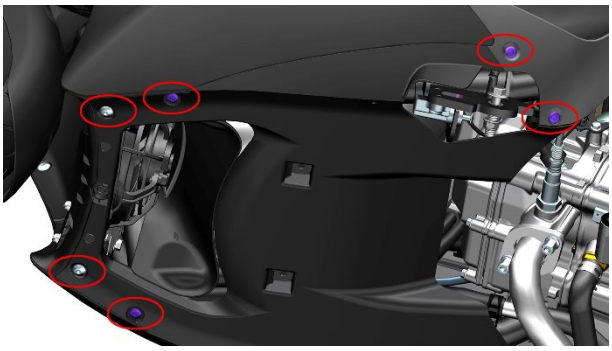

j. Press the blue part inward at the junction of green and blue as shown in the figure; pull the red and green components outward. Then apply force from the rear wheel to the front wheel along the junction of the red and blue parts, push the red part outwards, and force the blue parts inward to break apart. Remove the left pedal and left pedal trim cover assembly.

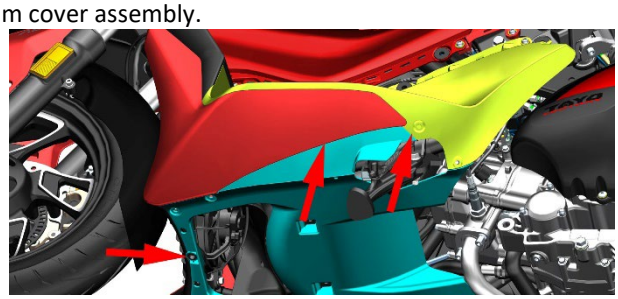

k. Use a dust blow gun to blow away the dust and debris near the spark plug.

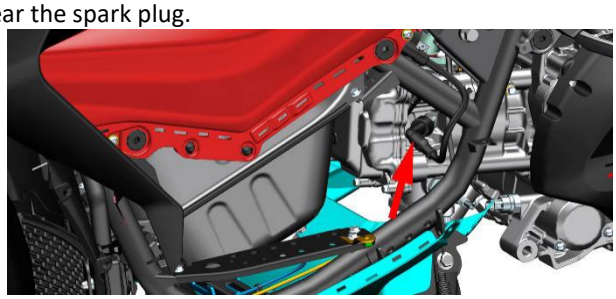

l. Pull out the ignition coil high-voltage cap.

m. Remove the spark plug by turning it counterclockwise with the vehicle-mounted tool or special 14# spark plug sleeve.

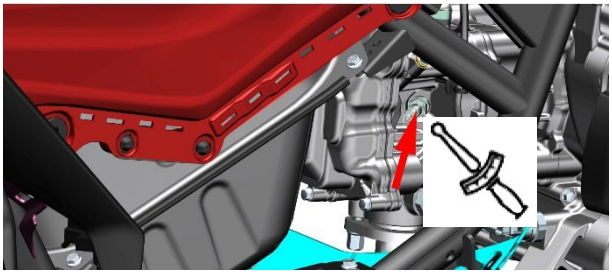

n. It is recommended to seal the spark plug installation hole with masking paper or other soft plastic bags to prevent foreign matter from entering the engine.

2. Check the spark plug

a. Check whether the insulator is cracked or damaged, whether the center electrode is abraded, fouled, corroded, excessively carbonized or discolored (the color of the ceramic insulator around the middle electrode of the spark plug should be light brown). If so, replace the spark plug with a new one.

b. Clean the electrode with a special spark plug cleaner. Use a hard iron wire or steel needle to remove the attached carbon deposits.

c. Use a feeler gauge to inspect the gap between the center electrode and the side electrode.



d. If necessary, the gap can be adjusted by bending the side electrodes, paying attention to the strength during adjustment.

e. Clean the surface of the spark plug gasket and the joint surface, and wipe off the dirt on the thread.

f. First screw it back to the engine by hand, and then use the tool to turn it clockwise to the standard torque.

Model: NGK LMAR8A-9
Resistance between the terminal screw and the center electrode: 3～7.5kΩ
Clearance: 0.8-0.9mm (0.031-0.035in)
Torque: 14N.m (1.4kgf.m, 10 lbf.ft)

3. Refer to the steps to remove the spark plug to restore all parts.

DANGER

●The vehicle must be parked on a flat and stable ground or a lifting platform.
●The operation can only be performed after the engine has cooled down completely.

WARNING

●Do not pull or knock the center electrode.
●If the replacement of inappropriate heating value or inferior spark plugs causes engine damage, it is not within the scope of the three guarantees.
●When installing the spark plug, the torque should not be too large, and the thread should be screwed in manually before tightening. If there is no torque wrench to replace the spark plug, you can turn it by hand until there is resistance and then rotate it 1/2 turn. For example, if you use an old spark plug, you can turn it to the standard torque as soon as possible.
●Pay attention and order when removing the plastic buckle to avoid the buckle from breaking.

M125/155 Spark plug

Caution:

●Before disassembling, blow off the dust near the spark plug with a dust blower.

●After removing the spark plug, prevent foreign objects from falling into the engine.

●The M125(2024)/155 steps are similar to the M125, taking the M125 as an example.

1. Disassemble the spark plug

a. Put down the right rear pedal and use the 4# inner hexagon to remove the M6×14 bolt.

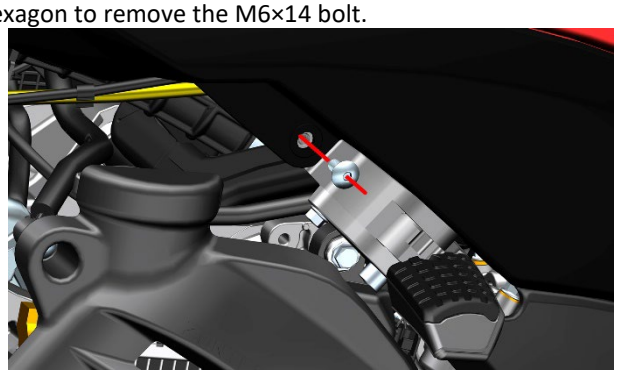

b. Pull out in sequence in the direction of the arrow (from the rear wheel to the front wheel). Note that there are 5 staples at the red circle and a circle of buckles around. It takes a lot of force to pull out.

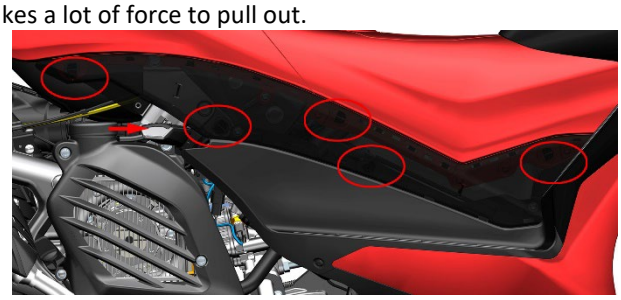

c. Use your fingers or a plastic crowbar to insert the arrow indication point, first pry the arrow indication point open the gap and then pull up.



d. Respectively use 4# inner hexagon to remove the 2 M6×12 bolts at the front pedal.

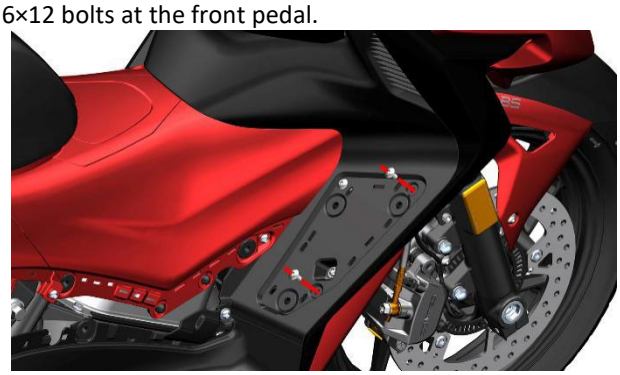

e. Use 4# inner hexagon to remove the 3 M6×14 bolts that surround the right side.



f. Use your fingers or a plastic crowbar to forcefully break out from the arrow point until the bolt near the arrow point is exposed. Because there are still bolts on the upper part that have not been removed, it cannot be removed directly.



g. Use 5# inner hexagon to remove the M6×16 bolt, remove bushing.

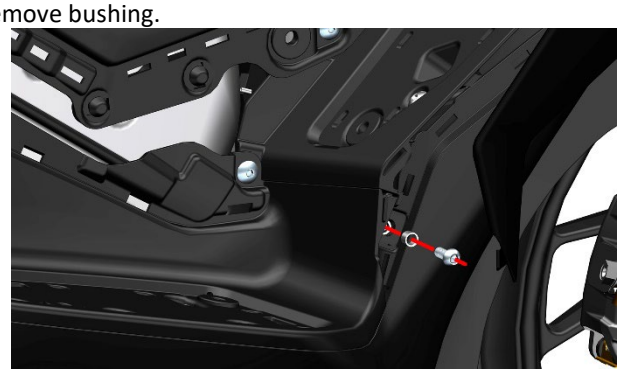

h. Use 4# inner hexagon to remove 7 pcs M6×14 bolts.



i. Use 4# inner hexagon to press down the center cylindrical pins of the 3 swell nails on the right, and then remove the swell nails. Remove the M6×14 bolt on the right front part with a 4# inner hexagon. For instructions on disassembly and assembly of swell nails, please refer to the pre-service instructions in this chapter.

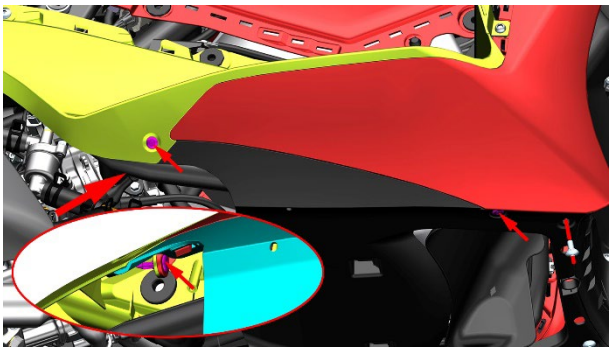

j. Press the blue part inward at the junction of green and blue as shown in the figure; pull the red and green components outward. Then apply force from the rear wheel to the front wheel along the junction of the red and blue parts, push the red part outwards, and force the blue parts inward to break apart. Remove the right pedal and right pedal trim cover assembly.

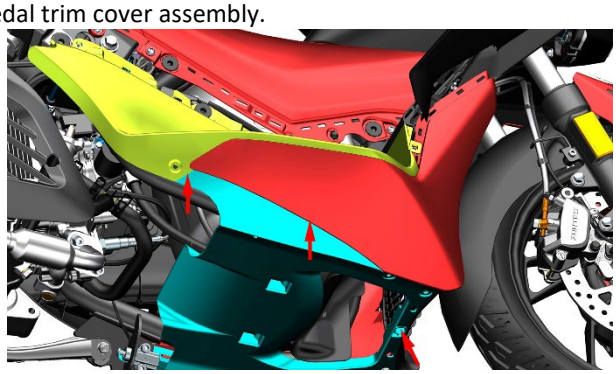

k. Use a dust blow gun to blow away the dust and debris near the spark plug.

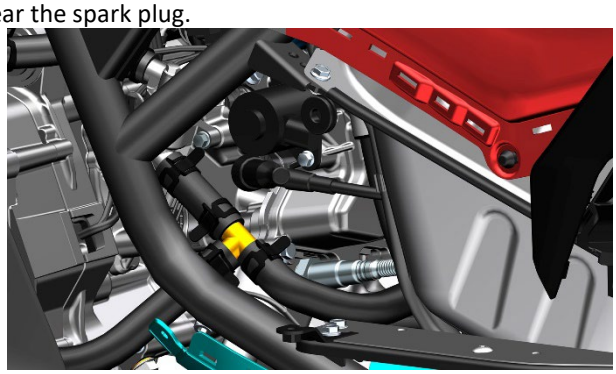

l. Pull out the ignition coil high-voltage cap.

m. Remove the spark plug by turning it counterclockwise with the vehicle-mounted tool or special 16# spark plug sleeve.

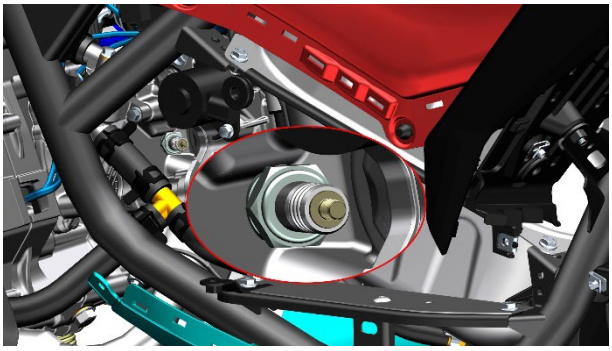

n. It is recommended to seal the spark plug installation hole with masking paper or other soft plastic bags to prevent foreign matter from entering the engine.

2. Check the spark plug

a. Check whether the insulator is cracked or damaged, whether the center electrode is abraded, fouled, corroded, excessively carbonized or discolored (the color of the ceramic insulator around the middle electrode of the spark plug should be light brown). If so, replace the spark plug with a new one.

b. Clean the electrode with a special spark plug cleaner. Use a hard iron wire or steel needle to remove the attached carbon deposits.

c. Use a feeler gauge to inspect the gap between the center electrode and the side electrode.



d. If necessary, the gap can be adjusted by bending the side electrodes, paying attention to the strength during adjustment.

e. Clean the surface of the spark plug gasket and the joint surface, and wipe off the dirt on the thread.

f. First screw it back to the engine by hand, and then use the tool to turn it clockwise to the standard torque.

125CC Model: NGK CR8EI-8
Clearance: 0.7-0.9mm (0.028-0.035in)
150/155CC Model: NGK CPR8EA-9
Clearance: 0.8-0.9mm (0.031-0.035in)

Resistance between the terminal screw and the center electrode: 3～7.5kΩ
Torque: 14N.m (1.4kgf.m, 10 lbf.ft)

3. Refer to the steps to remove the spark plug to restore all parts.

DANGER

●The vehicle must be parked on a flat and stable ground or a lifting platform.
●The operation can only be performed after the engine has cooled down completely.

WARNING

●Do not pull or knock the center electrode.
●If the replacement of inappropriate heating value or inferior spark plugs causes engine damage, it is not within the scope of the three guarantees.
●When installing the spark plug, the torque should not be too large, and the thread should be screwed in manually before tightening. If there is no torque wrench to replace the spark plug, you can turn it by hand until there is resistance and then rotate it 1/2 turn. For example, if you use an old spark plug, you can turn it to the standard torque as soon as possible.
●Pay attention and order when removing the plastic buckle to avoid the buckle from breaking.

Engine oil

DANGER

●The vehicle must be parked on a flat and stable ground or a lifting platform.
●Once the engine and muffler have cooled down, the operation can be performed.
●When adding engine oil, prevent the engine oil from dripping onto the surface of the muffler.
●The engine oil should be kept away from children and pets. Short-term contact with engine oil may irritate the skin. Please wear long-sleeved clothes or sleeves and anti-shake gloves before changing the oil. If you accidentally get oil, you need to clean it thoroughly with soapy water.
●Replaced waste engine oil must be collected uniformly and handed over to professional organizations for proper disposal. It is forbidden to dump at will, into trash cans or directly onto the ground, etc.

WARNING

●The engine oil and gear box oil should be replaced according to the periodic table specified in the manual.
●It is necessary to purchase regular and qualified engine oil. Inferior engine oil will aggravate engine wear and, in severe cases, will cause engine failure and shorten service life.
●The amount of oil should meet the requirements, too much or too little may cause engine damage.

CAUTION

●The copper gasket and the combination gasket need to be replaced after disassembly; the O-ring and gasket are recommended to be replaced with new ones.
●O-rings need to be assembled in place to avoid trimming.
●After removing the oil dipstick and the filler nut, it is necessary to prevent foreign matter from falling into the engine.

M310/250

●The M250 steps are similar to the M310, taking the M310 as an example.

1. Drain the oil

a. Start the vehicle and turn off the engine for 3-5 minutes after idling for 3-5 minutes.

b. Use the main bracket to park the vehicle firmly.

c. Rotate the oil dipstick(1) on the right side of the engine counterclockwise, and remove the oil dipstick(1) and O ring (2) to accelerate the oil flow.

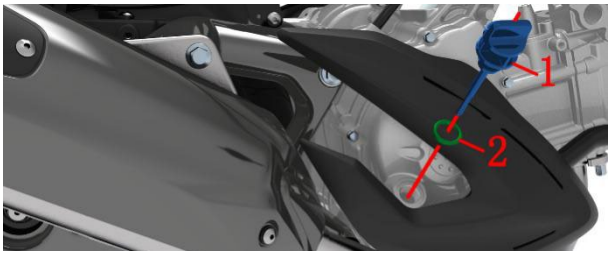

d. After placing an oil pan under the oil drain bolt, use a 14# sleeve to remove the oil drain bolt(3) and the combined seal gasket(4).

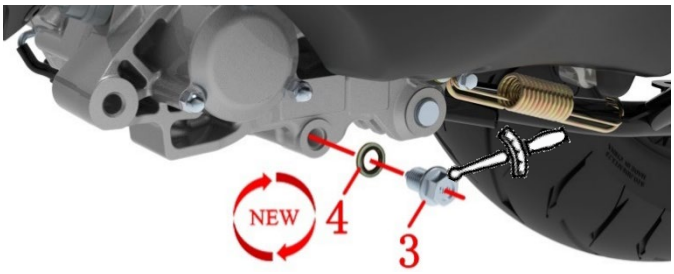

e. Wipe clean the joint surface with a non-woven fabric. Inspect the oil drain bolt(3) whether the joint surface is scratched; if there is any, replace it with a new one, if not, wipe it clean.

f. Replace the new combination gasket(4), and use a 14# sleeve to install the oil drain bolt(3) and combination gasket (4) back to the engine box. Torque: 25N.m (2.6 kgf.m, 18 lbf.ft).

2. Replace fine filter

a. Place an oil pan under the fine filter cover.

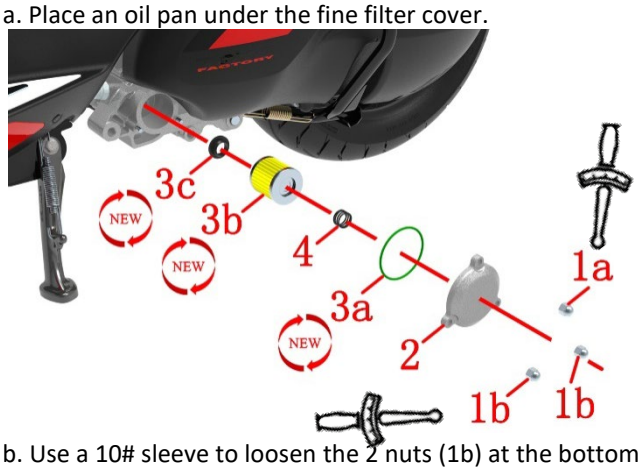

b. Use a 10# sleeve to loosen the 2 nuts (1b) at the bottom of the fine filter cover; use a 10# torx wrench to remove the upper nut (1c). Then remove the nut (1b) at the bottom.

c. Remove the fine filter cover(2) and O ring (3a). Remove the spring(4), the fine filter (oil filter element) (3b) and the gasket (3c) in sequence.

d. Replace the new fine filter (oil filter element) and gasket. The fine filter assembly already contains O ring (3a), fine filter (oil filter element) (3b) and gasket (3c). Replace in order.

e. Remove the O ring on the fine filter cover and replace it with a new O ring. First put the O ring (3a) into the groove of the fine filter cover(2), and then install it back to the engine box.

f. Screw back the 3 nuts (1), first pre-tighten the bottom 2 with a 10# sleeve, and tighten the upper nut (1a) with a 10# torx wrench; then tighten the bottom 2 screws. Torque: 12 N.m (1.2 kgf.m, 9 lbf.ft).

3. Add oil

a. Replace the filter element with a measuring cup with a viscosity of SAE5W-40/10W-40/10W-50. The new API SN grade or higher motorcycle special machine 1.75L (1.85US qt, 1.54 lmp qt, 0.46 US gal, 0.39 lmp gal). If the filter element is not replaced, the measuring cup is filled with 1.7L (1.8US qt, 1.49 lmp qt, 0.45 US gal, 0.37 lmp gal).

b. Use a funnel + measuring cup to add engine oil to the fuel filler opening on the right crankcase cover of the engine.

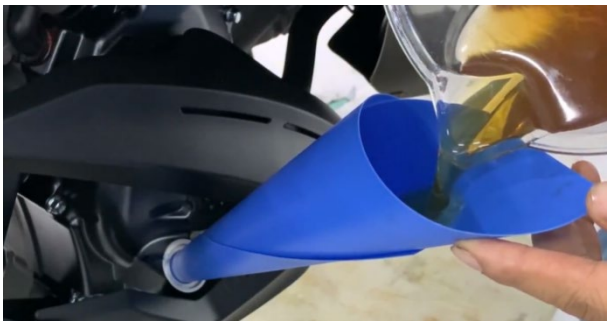

c. Wipe clean the fuel filler opening with a non-woven cloth.



d.inspection O ring(2)Whether there is damage or aging, if not, wipe it clean, if any, replace it.

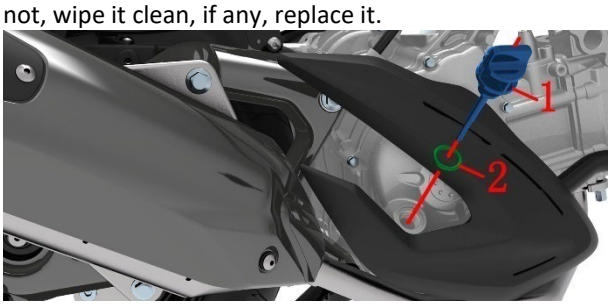

e. Wipe clean the oil dipstick, and turn the oil dipstick(1) and O-ring(2) clockwise by hand to replace the right crankcase cover of the engine.

4. Change gear box oil

a. Place an oil pan under the rear of the left engine. Rotate the fuel filler nut(1) counterclockwise, and remove the nut(1) and O ring(2).

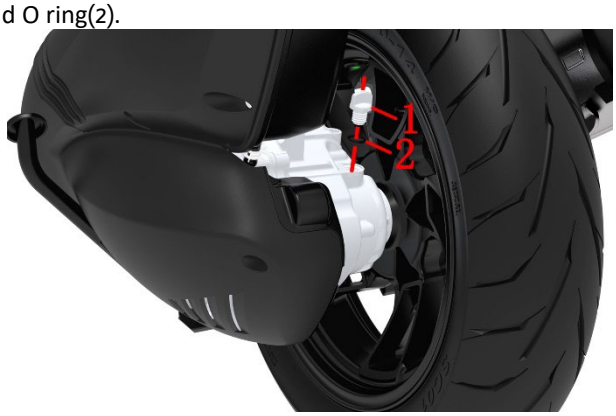

b. Use a 14# sleeve to loosen the oil drain bolt(3) counterclockwise, and remove the bolt(3) and copper pad(4).

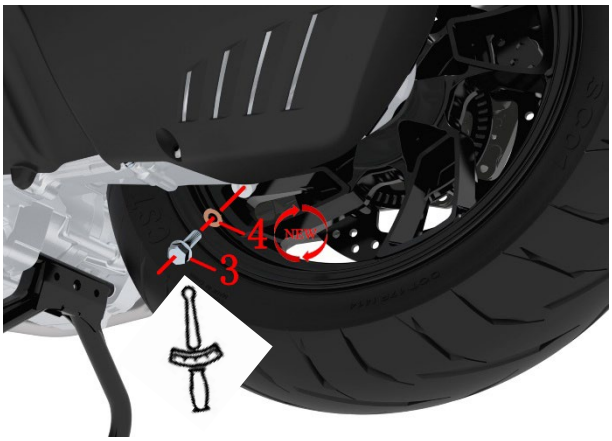

c. Remove the oil drain bolt(3) and the copper pad(4).

d. After the gear box oil is completely drained, wipe the surface of the drain port with a non-woven cloth.

e. Replace with a new copper pad(4), check whether the joint surface of the oil drain bolt(3) is scratched, if not, wipe it clean and install it in order. Torque: 20 N.m (2 kgf.m, 15 lbf.ft).

f. Fill the measuring cup with 0.2L of oil or gearbox special oil (0.21US qt, 0.18 lmp qt, 0.05 US gal, 0.04 lmp gal).

g. Check whether the O ring(2) is damaged or aging, wipe it clean if not, and replace it if there is any.

h. Wipe clean the nut(1) and the fuel filler port with a non-woven cloth, first put the O ring(2) into the nut(1), and then turn it clockwise by hand and install it back to the fuel filler port of the gear box.

5. Confirm the oil level

a. After starting the vehicle and running at idle speed for several minutes, check whether all the disassembled positions are leaking, and if there is any leakage, it needs to be checked.

b. After the engine has been idling for 5 minutes and then turned off for 3 minutes, check whether the oil level meets the standard. If it does not meet the standard, draw it out or add it to the standard.



M125

●The M125(2024) steps are similar to the M125, taking the M125 as an example.

1. Drain the oil

a. Start the vehicle and turn off the engine for 3-5 minutes after idling for 3-5 minutes.

b. Use the main bracket to park the vehicle firmly.

c. Rotate the oil dipstick(1) on the right side of the engine counterclockwise, and remove the oil dipstick(1) and O ring (2) to accelerate the oil flow.

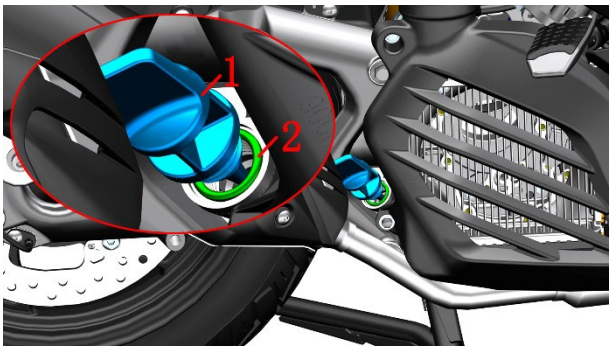

d. After placing an oil pan under the oil drain bolt, use a 14# sleeve to remove the oil drain bolt(3) and the combined seal gasket(4). Use a 24# sleeve to remove the strainer cover (5) at the bottom, take off the 34.5×3.5 acrylate rubber O-ring(6), the ϕ25.8×34.2×1.8 strainer spring(7) and the outer diameter ϕ22×21 cap-shaped strainer(8). Drain the oil from the crankcase.



e. Check whether the strainer (8) is damaged, if it is damaged, replace it, if not, clean it up.

f. Wipe clean the joint surface with a non-woven fabric. Inspect the oil drain bolt(3) whether the joint surface is scratched; if there is any, replace it with a new one, if not, wipe it clean.

g. Replace the new combination gasket(4), and use a 14# sleeve to install the oil drain bolt(3) and combination gasket (4) back to the engine box. Torque: 25N.m (2.6 kgf.m, 18 lbf. ft). Replace the new O-ring (6), put the O-ring (6), spring (7) and cap-type fine filter (8) into the fine filter cover (5) in turn, and then put it back to the bottom of the engine with a 24# sleeve.

2. Replace fine filter

a. Place an oil pan under the fine filter cover.

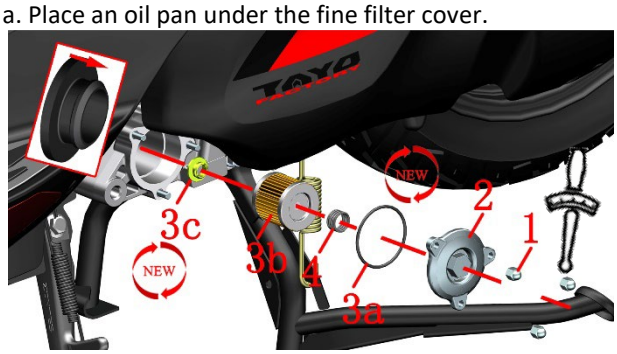

b. Use a 10# sleeve to loosen the 3 nuts(1) at the fine filter cover.

c. Remove the fine filter cover(2) and O ring (3a). Remove the spring(4), the fine filter (oil filter element) (3b) and the gasket (3c) in sequence.

d. Replace the new fine filter (oil filter element) and gasket. The fine filter assembly already contains O ring (3a), fine filter (oil filter element) (3b) and gasket (3c). Replace in order.

e. Remove the O ring on the fine filter cover and replace it with a new O ring. First put the O ring (3a) into the groove of the fine filter cover(2), and then install it back to the engine box.

f. Screw back the 3 nuts (1), Torque: 12 N.m (1.2 kgf.m, 9 lbf.ft).

3. Add oil

a. Replace the filter element with a measuring cup with a viscosity of SAE5W-40/10W-40/10W-50. The new API SN grade or higher motorcycle special machine 0.95L (1 US qt, 0.84 lmp qt, 0.25 US gal, 0.21 lmp gal). If the filter element is not replaced, the measuring cup is filled with 0.9L (0.95 US qt, 0.79 lmp qt, 0.24 US gal, 0.2 lmp gal).

b. Use a funnel + measuring cup to add engine oil to the fuel filler opening on the right crankcase cover of the engine.

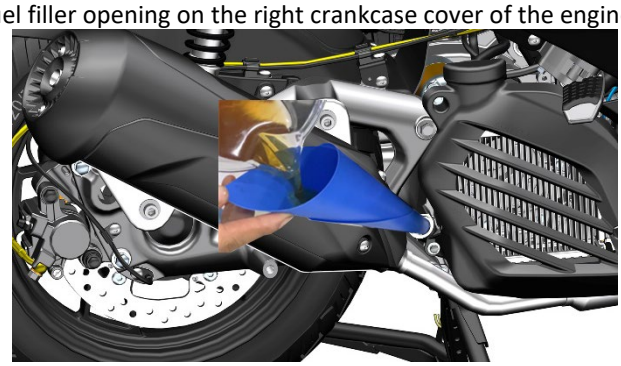

c. Wipe clean the fuel filler opening with a non-woven cloth.

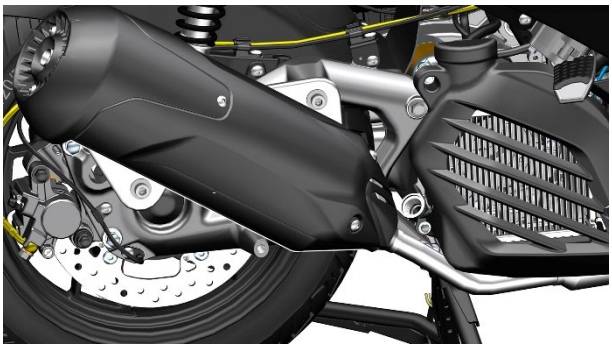

d.inspection O ring(2)Whether there is damage or aging, if not, wipe it clean, if any, replace it.

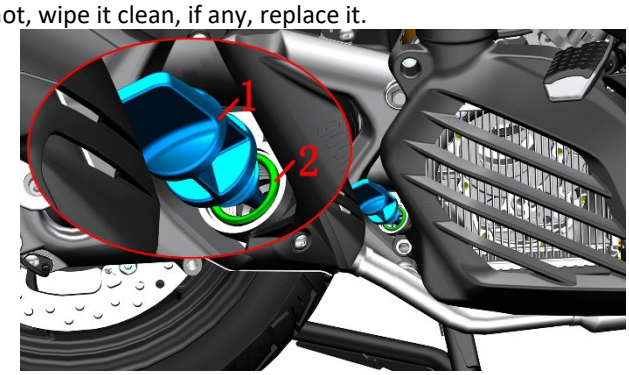

e. Wipe clean the oil dipstick, and turn the oil dipstick(1) and O-ring(2) clockwise by hand to replace the right crankcase cover of the engine.

4. Change gear box oil

a. Remove the left engine cover by referring to the steps for replacing the air inlet filter element.

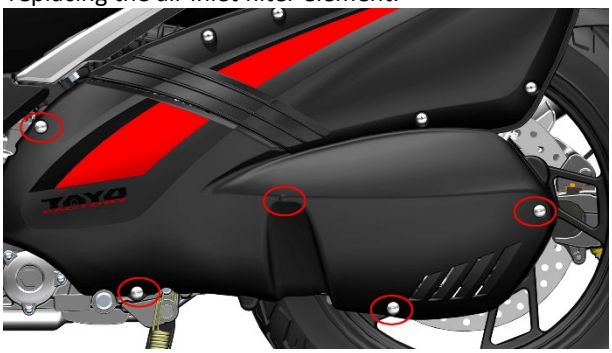

b. Place an oil pan under the rear of the left engine. Rotate the fuel filler nut(1) counterclockwise, and remove the nut(1) and O ring(2).

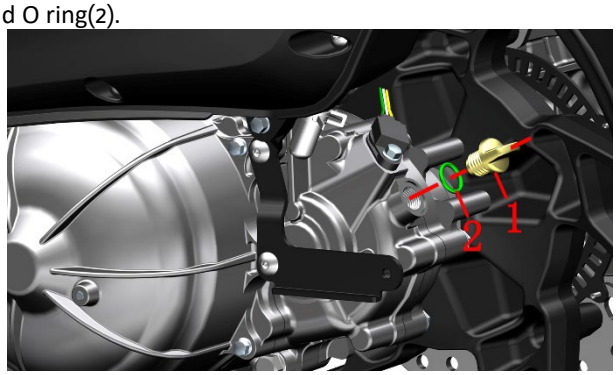

c. Use a 14# sleeve to loosen the oil drain bolt(3) counterclockwise, and remove the bolt(3) and copper pad(4).

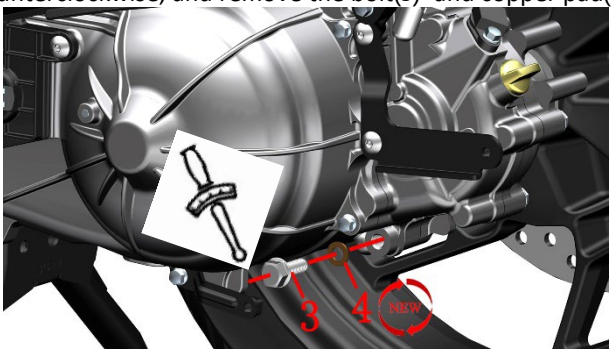

d. Remove the oil drain bolt(3) and the copper pad(4).

e. After the gear box oil is completely drained, wipe the surface of the drain port with a non-woven cloth.

f. Replace with a new copper pad(4), check whether the joint surface of the oil drain bolt(3) is scratched, if not, wipe it clean and install it in order. Torque: 20 N.m (2 kgf.m, 15 lbf.ft).

g. Fill the measuring cup with 0.16L of oil or gearbox special oil (0.17US qt, 0.14 lmp qt, 0.04 US gal, 0.04 lmp gal).

h. Check whether the O ring(2) is damaged or aging, wipe it clean if not, and replace it if there is any.

i. Wipe clean the nut(1) and the fuel filler port with a non-woven cloth, first put the O ring(2) into the nut(1), and then turn it clockwise by hand and install it back to the fuel filler port of the gear box.

5. Confirm the oil level

a. After starting the vehicle and running at idle speed for several minutes, check whether all the disassembled positions are leaking, and if there is any leakage, it needs to be checked.

b. After the engine has been idling for 5 minutes and then turned off for 3 minutes, check whether the oil level meets the standard. If it does not meet the standard, draw it out or add it to the standard.



M350/368/368(ETC)

1. Drain the oil

a. Start the vehicle and turn off the engine for 3-5 minutes after idling for 3-5 minutes.

b. Use the main bracket to park the vehicle firmly.

c. Rotate the oil dipstick(1) on the right side of the engine counterclockwise, and remove the oil dipstick(1) and O ring (2) to accelerate the oil flow.

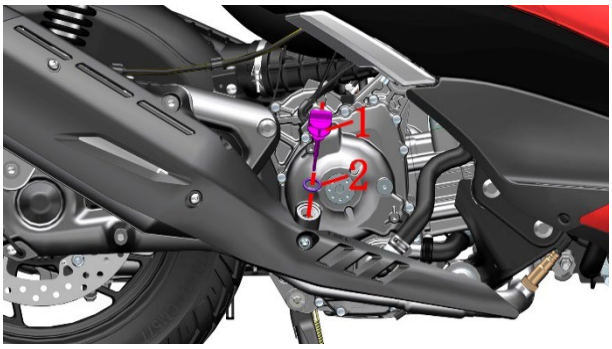

d. After placing the oil tray under the oil drain bolt, remove the M12×1.5×15 oil drain bolt (3) and the 12×ϕ20×2 combined sealing pad with the 14# sleeve.

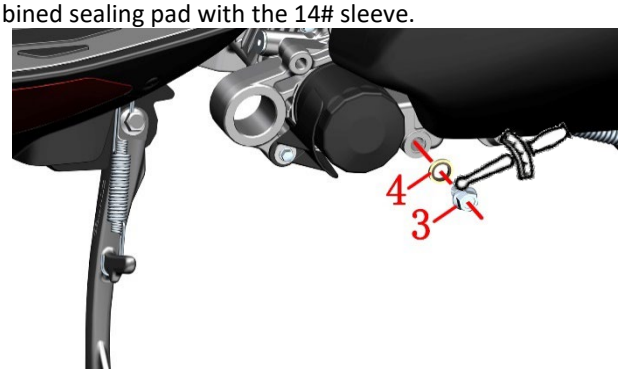

e. Wipe the joint surface clean with non-woven cloth. Check whether the joint surface(3) is scratched; If yes,it needs to replace with new one, if not wipe clean.

f. Replace the new combination gasket (4) and install the oil drain bolt (3) and combination gasket (4) back on the engine box with the 14# sleeve. Torque: 25 N.m(2.6 kgf.m,18 lbf.ft).

2. Replace the fine filter

a. Remove the filter guard plate

M350

Use a 10# sleeve to fix the M6 nut and remove the bolt with an 8# sleeve, and remove the flanging bushing and filter guard plate.

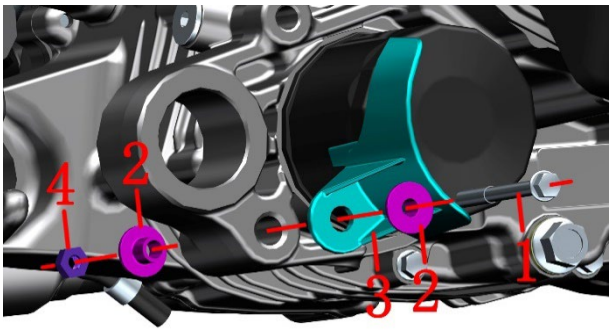

M368

Take off the strap then remoed the oil filter guard plate.

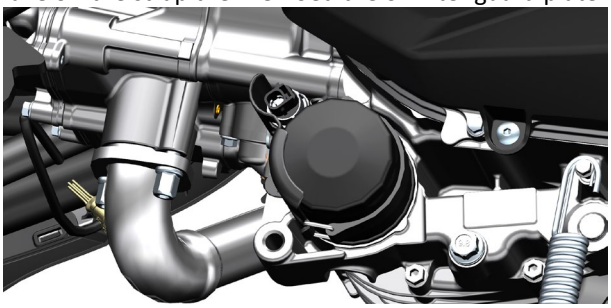

M368(ETC)

Remove the oil filter guard plate after removing the bolt with a T25 Torx wrench.



b. The oil tray is placed under the fine filter cover.



c. Remove the fine filter by turning it counterclockwise using a 14-sided 65mm cap filter wrench + a 1/2" (12.5mm) ratchet wrench. The Skiden model of the filter wrench is 97401. Replace after the first 1,000 kilometers or 3 months (whichever comes first), M350/368 is then replaced every 8,000 kilometers or 30 months (whichever comes first), and M368 (ETC) is replaced every 12,000 kilometers.



d. Drain the oil from the air filter.



e. Wipe the residual oil and impurities on the engine with a clean non-woven cloth.

f. Coat the seal ring of the new fine filter with engine oil and install it on the engine.

Torque: 20 N.m (2 kgf. m, 15 lbf. ft). Reassemble the filter guard.

Be careful not to omit the seal ring, and check the surface of the seal ring for damage, hardening and other defects before assembly.



3. Add oil

a. Replace the filter element, then use a measuring cup to fill 1.75L (1.85US qt, 1.54lmp qt, 0.46US gal, 0.39lmp gal) of the new API SN class or higher motorcycle special machine with viscosity SAE5W-40/10W-40/10W-50.Without replacing the filter element, 1.55L of gasoline (1.64US qt, 1.36lmp qt, 0.41US gal, 0.34lmp gal) is filled with a measuring cup.

b. After removing the oil gauge, use the funnel + measuring cup to add the oil to the oil filling port on the right crankcase cover of the engine.



c. Clean the refueling port with non-woven cloth.

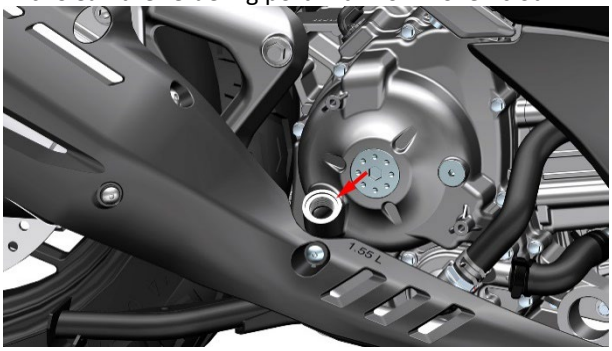

d. Check whether the O ring (2) is damaged or aging. If not, wipe it clean. If so, replace it. The O-ring size of the oil gauge is 18×3×3.5.

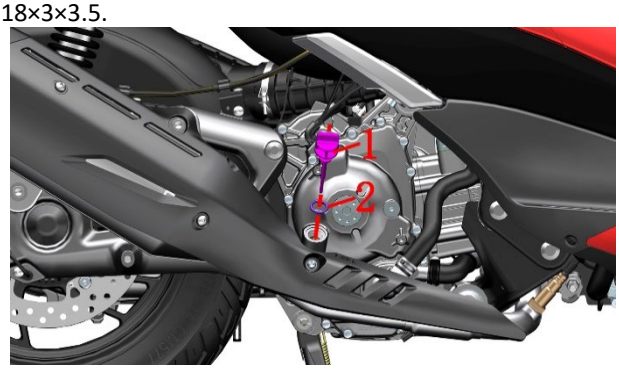

e. Wipe the oil gauge clean, and install the oil gauge (1) and O ring (2) back to the right crankcase cover of the engine by clockwise rotation by hand.

4. Replace the gearbox oil

a. Rotate the refueling mouth nut (1) counterclockwise and remove the nut (1) and O ring (2). The specification of O ring for the nut of the refueling mouth is 13.8×2.5. The screw cap (1) at the refueling port does not need to be removed to prevent foreign matter from falling into the engine.

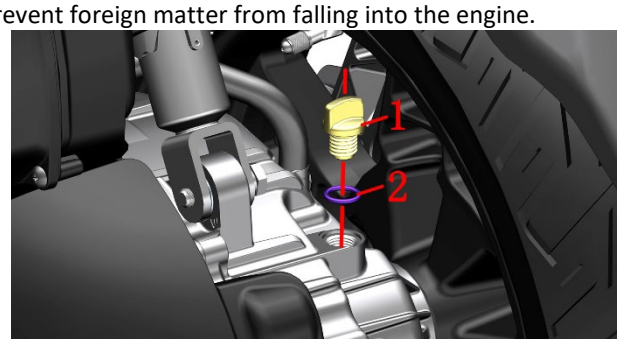

Place the oil tray under the rear of the left engine. Loosen the drain bolt (3) counterclockwise. The ETC model uses 10# sleeves, M368 2024 models before August 25, 2025 are 10# sleeves, after which they are 14# sleeves.

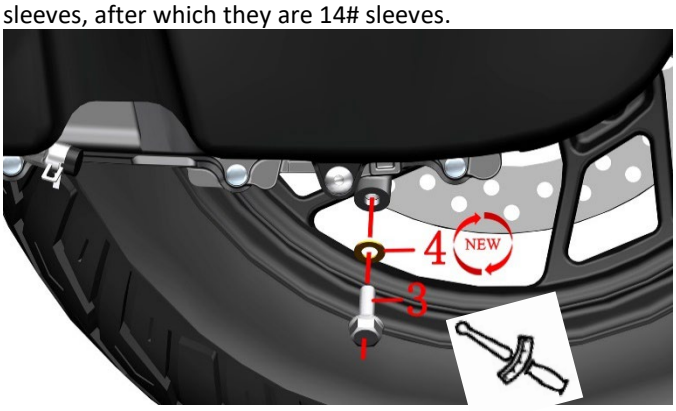

c. Remove the M8×25 drain bolt (3) and the 8.3×16×1.5 copper pad (4).

d. After the gearbox oil is completely discharged, wipe the surface of the oil outlet with a non-woven cloth.

e. Replace the new copper pad(4), check whether the oil drain bolt (3) joint surface is scratched, if not, wipe it clean and put it back in order. Torque: 20 N.m(2 kgf.m,15 lbf.ft).

f. 0.2L (0.21US qt, 0.18lmp qt, 0.05US gal, 0.04lmp gal) of measuring cup oil or special gearbox oil.

g. Check whether there is any damage or aging of the O ring, if not, wipe it clean, if there is, replace it.

h. Wipe the nut (3) and the refueling mouth with non-woven cloth, first put the O ring (4) into the nut (3) and then rotate it clockwise back to the gear box refueling mouth by hand.

5. Confirm the oil level

a. After idling the vehicle for several minutes, check all the disassembled locations for leakage. If yes, check it.

b. The engine will idle for 5 minutes and then turn off for 3 minutes. Check whether the oil level meets the standard.If not, it should be withdrawn or replenished to the standard.



M155

1. Drain the engine oil

A. Start the vehicle, turn off the engine for 3-5 minutes after idling for 3-5 minutes (when the temperature is lower than 10 ℃ (50 F), the idling operation time shall be extended appropriately).

B. Park the vehicle firmly with the main support.

C. Rotate the oil dipstick (1) on the right side of the engine counterclockwise, and remove the oil dipstick (1) and O-ring (2).Put the oil dipstick on the oil filler without taking it away to prevent foreign matters from falling into the engine.

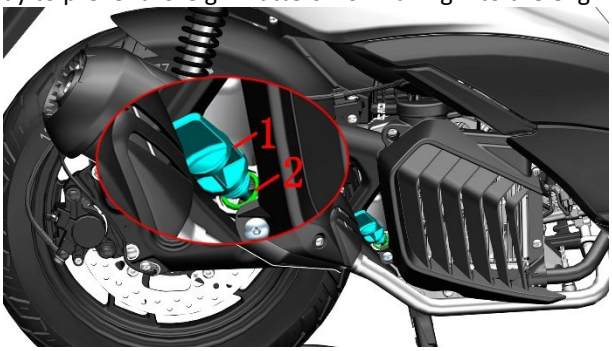

D. After the oil pan is placed under the oil drain bolt, remove the M12 × 1.5 × 15 oil drain bolt (3) and 12 × ϕ20 × 2 combined seal (4) gasket with 14 # sleeve. Drain the oil from the crankcase.

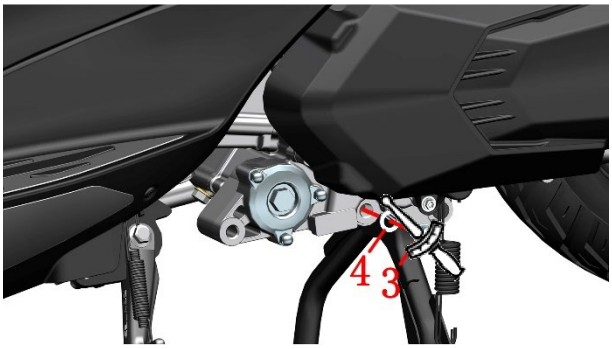

E. Wipe the joint surface clean with non-woven fabric. Check whether the joint surface of the oil drain bolt (3) is

scratched;If any, replace it with a new one; if not, wipe it clean.

F. Replace with a new combined sealing gasket (4), and re-install the oil drain bolt (3) and the combined sealing gasket (4) on the engine box with a 14 # sleeve. Torque: 25 N.m(2.6 kgf.m,18 lbf.ft)。 Replace the new O-ring (6), re-install the O-ring (6), spring (7) and cap-type fine filter (8) in turn, and then tighten the bolt with 24 # sleeve.

2. Replace the fine filter

A. Place an oil pan under the cover of the fine filter.

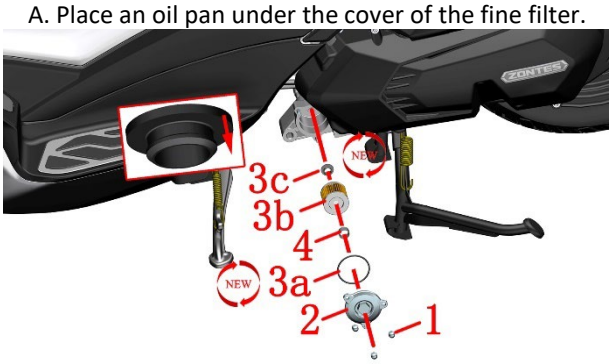

B. Loosen the 3 nuts on the filter cover with 10 # sleeve.

C. Remove the fine filter cover (2) and O-ring (3A). Remove the spring (4), the fine filter (oil filter element) (3B) and the gasket (3C) in turn.

D. Replace the new fine filter (oil filter element) (3B) and gasket (3C).The fine filter assembly already contains the O-ring (3A), the fine filter (oil filter element) (3B) and the gasket (3C). Replace one by one.

E. Remove the O-ring on the fine filter cover and replace it with a new O-ring. Put the O-ring (3A) into the groove of the fine filter cover (2) and re-install it.

E. Re-install 3 nuts (1). Torque: 12 N. M (1.2 kg f. M, 9 LBF. Ft).

The seal ring shall not be omitted, and the surface of the seal ring shall be checked for damage, hardening and other defects before assembly.

3. Add engine oil

a.Replace the filter element with a cup viscosity of SAE5W-40/10W-40/10W-50. New API SN grade or higher motorcycle special machine 0.95 L (1 US qt,0.84 lmp qt,0.25 US gal,0.21 lmp gal）.0.9 L (0.95 US QT, 0.79 LMP QT, 0.24 US gal, 0.2 LMP gal) in a measuring cup without replacing the filter element.

B. After removing the oil dipstick, add engine oil to the oil filler of the right crankcase cover of the engine with a funnel and a measuring cup.

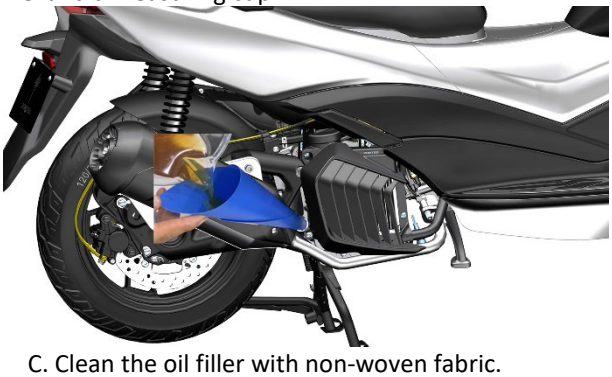

C. Clean the oil filler with non-woven fabric.

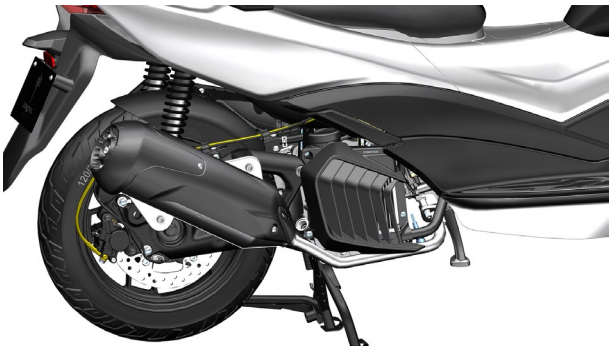

D. Check whether the O-ring (2) is damaged or aged. If not, wipe it clean. If damaged, replace it.Specification of O-ring used for oil dipstick: 18 × 3 × 3.5.

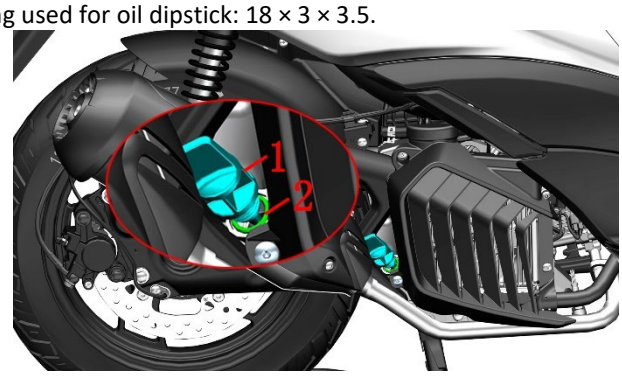

E. Clean the oil dipstick, and install the oil dipstick (1) and O-ring (2) back to the right crankcase cover of the engine by rotating clockwise by hand.

4. Replace the gearbox oil

A. Buckle the rubber plug pointed to by the arrow, and then use the 4# hexagon to remove the M6×14 bolt or T25 torx wrench to remove the small flange M6×16 + bushing + rubber pad, the bolt here can not be removed temporarily, and it can be completely loosened. Use 4# hexagon to remove the 4 M6 ×14 shoulder bolts or T25 torx wrenches shown in the figure, and remove the 4 small flanges M6×16 + bushing + rubber pads.

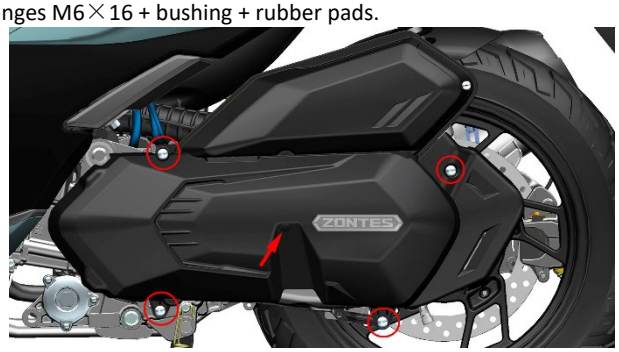

B. Rotate the oil filler nut (1) counterclockwise and remove the nut (1) and O-ring (2). Specification of O-ring used for oil filler nut: 13.8 × 2.5.Put the nut (1) on the oil filler without taking it away to prevent foreign matters from falling into the engine.

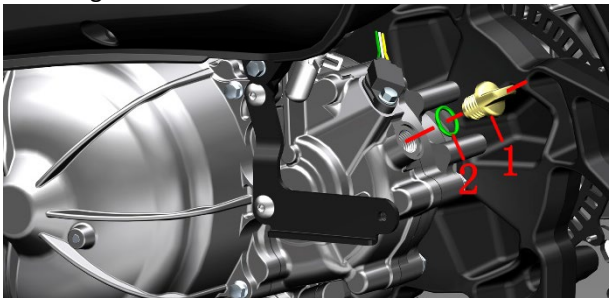

C. Place the drain pan under the rear of the left-hand engine. Unscrew the oil drain bolt (3) counterclockwise with 14 # sleeve.

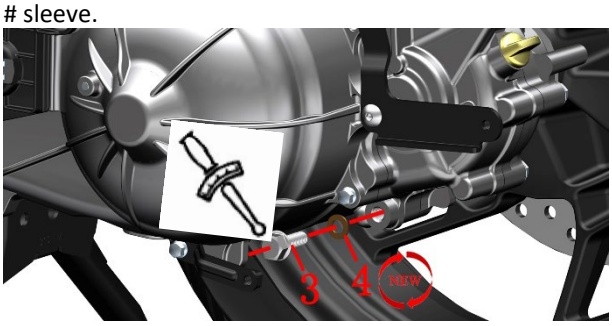

D. Remove M8 × 25 oil drain bolt (3) and 8.3 × 16 × 1.5 copper gasket (4).

E. After the oil in the gearbox is completely drained, wipe the surface of the oil drain port with non-woven fabric.

F. Replace with a new copper gasket (4), and check whether the joint surface of the oil drain bolt (3) is scratched. If not, wipe it clean and re-install it in order. Torque: 20 N. M (2 kg f. M, 15 LBF. Ft).

G. Fill a measuring cup with 0.2L (0.21 US QT, 0.18 LMP QT, 0.05 US gal, 0.04 LMP gal) of engine oil or gearbox special oil.

H. Check whether O ring (4) is damaged or aged. If not, wipe it clean. If yes, replace it.

I. Clean the nut (3) and the oil filler with non-woven fabrics. First put the O-ring (4) into the nut (3) and then rotate it clockwise by hand to install it back to the oil filler of the gearbox.

5. Confirm the oil level

A. Start the vehicle and run it at idle speed for several minutes, and then check whether there is leakage at all disassembled positions. If there is leakage, check it.

b. After the engine runs at idle speed for 5 minutes, turn off the engine for 3 minutes. Check whether the engine oil level meets the standard. If not, it should be pumped out or supplemented to the standard.



M310/350/250 Throttle valve body

Caution:

●The three-in-one sensor and stepper motor cannot be immersed in any liquid.

●It is forbidden to adjust the idle speed adjustment screw on the valve body.

●The M350/250 steps are similar to the M310, taking the M310 as an example.

1. Do not dismantle the throttle body to clean up carbon deposits

a. In the process of riding, without affecting safety and complying with traffic laws, appropriately increase the throttle to increase the speed to more than 7000 and continue riding for no less than 2 minutes. High-speed scavenging can effectively remove carbon deposits.

b. Use a regular and qualified fuel cleaner to add in the amount indicated. Frequent use may cause damage to the oil supply line.

2. Remove the stepper motor and clean up carbon deposits

a. After opening the seat cushion, use 10# sleeve + ratchet wrench to remove 3 nuts(1). Remove the seat cushion and put it away. Be careful not to put it directly on the ground and avoid scratching the cushion skin.



b. For vehicles produced before March 7, 2022, follow this step, and for vehicles produced after that, skip directly to step h.

Use 4# inner hexagon to press down 4 swell nails(2) center cylindrical pins, and then a total of 4 swell nails on the left and right sides(2).

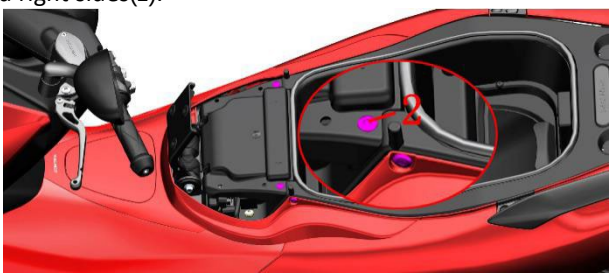

c. Grasp the rear of the battery cover assembly, turn it up, and then pull it out toward the rear of the vehicle. Note that there are buckles on both sides of the front. The rebate position needs to be inserted in the front when re-installing.



d. Open the black negative protection cap of the main wiring harness, use a cross-battery or 10# sleeve to remove the battery's own bolts and move the negative line away from the battery; then open the red positive protection cap and remove the positive bolts. Remove the positive wire. Remove the battery upwards.

Before March 7,2022:

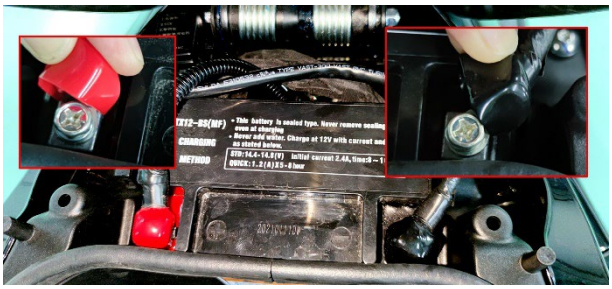

After March 7,2022:



For vehicles produced before March 7, 2022, follow this step, and for vehicles produced after that, skip directly to step h.

e. Pull up the 3 fuse boxes and pull out the cables. When re-installing, you need to insert the fuse box back to the corresponding position and arrange all the cables, otherwise it will be difficult to fit the battery cover in place.

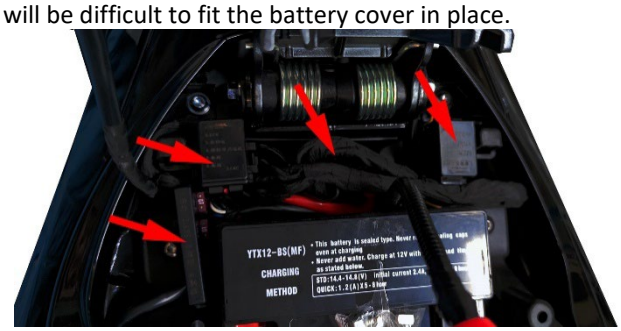

f. Pull out the two relay wires.

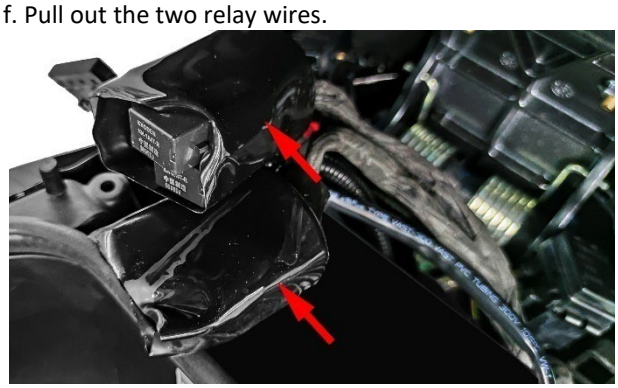

There are a total of 8 relays, the model is: KH-1A4T.

g. Unplug the two wires of the starting relay. Open the red and black protective caps of the starting relay, and remove the nuts with a 10# sleeve.

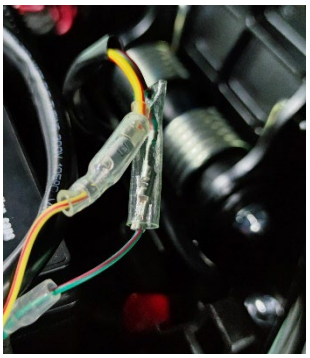

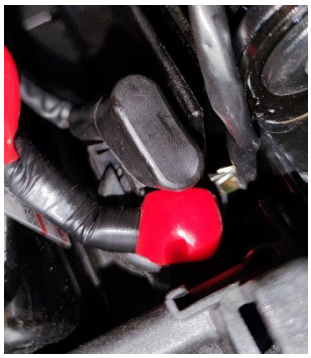

h. Straighten out the cables in the battery compartment.

For the medels before March 7,2022, remove the M6×16 bolts (3) on both sides with 4# inner hexagon according to Figure 1, and remove the bushing(4) and cushion rubber(5).



For the medels after March 7,2022,remove 2 pcs swell nails(2) on both sides.

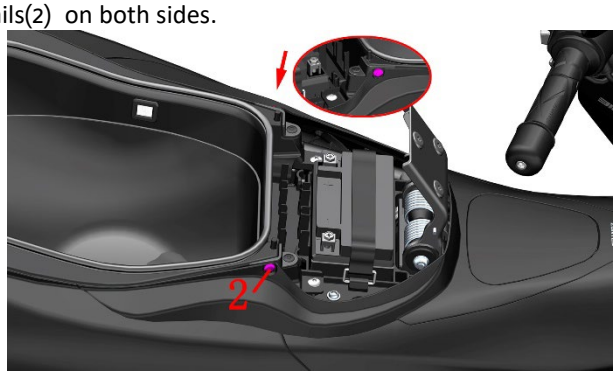

Remove the M6×16 bolts(3) on both sides with a 4# inner hexagon.

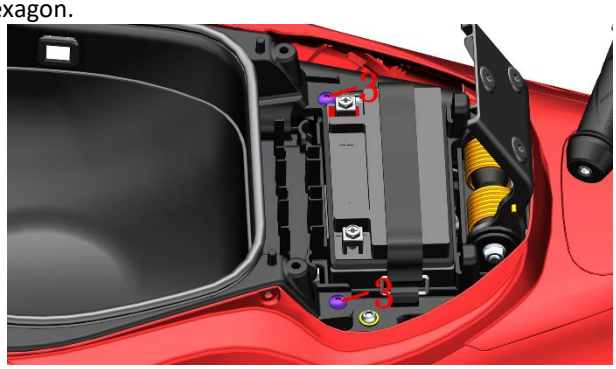

i. According to this step for folding rear storage box, and the monolithic rear storage box skip directly to the next step. Use your fingers or a plastic crowbar to pry the glove box rubber strip(7) from one end and remove it. Remove the decorative buckle(8) of the M6 hexagon socket bolt; remove the M6×16 bolts(3) on both sides with 4# hex socket, remove the bushing(4) and the cushion rubber(5). Remove the 3 M4×16 bolts(9) with a Phillips screwdriver.

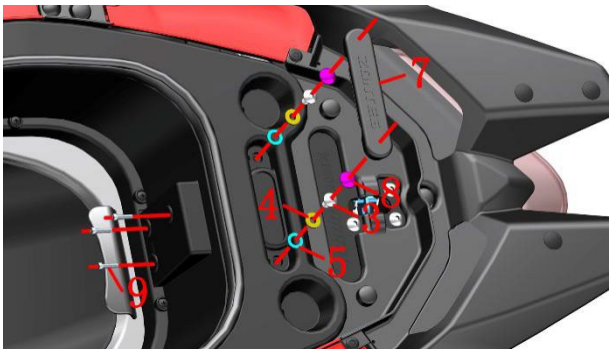

j. Remove the decorative buckle(8) of the M6 hexagon socket bolt; remove the M6×16 bolts(3) on both sides with 4# hex socket.

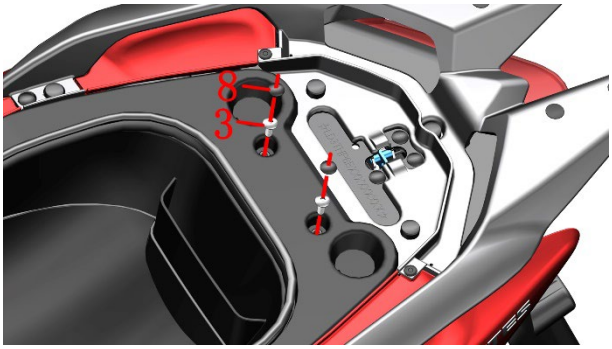

k. Grasp the tail skirt of the storage box and pull it upward obliquely, paying attention to the cables in the battery compartment. Pull up to see the left side of the glove box atmosphere lamp thread, unplug the thread and remove the glove box assembly.



l. Unplug the plug of the stepping motor①.

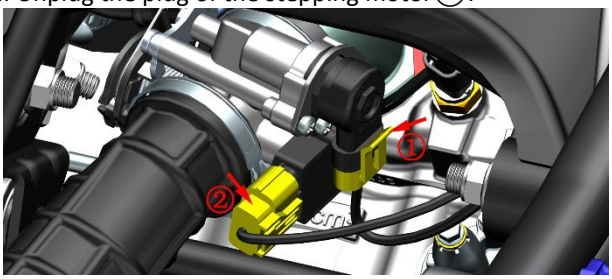

m. Use a short Phillips screwdriver to remove the 2 GB9074.4 M4×12 bolts③ and the anti-off card④ that come with the throttle valve body assembly, and then remove the stepping motor(10).

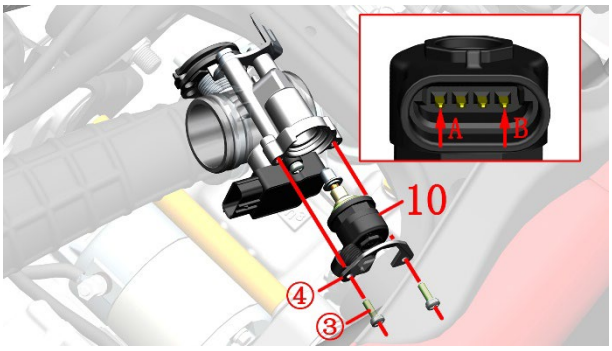

n. Use throttle cleaner to clean the carbon deposits on the head of the stepper motor. Spray a small amount of cleaning agent into the valve body hole. It is forbidden to soak the stepper motor with any liquid.



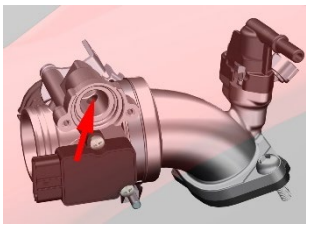

o. Install the stepper motor back to the valve body, paying attention not to miss the sealing ring. Plug the plug back in.

3. Remove the throttle valve body assembly to clean up carbon deposits

a. Unplug the plugs of the stepping motor① and the three-in-one sensor②.

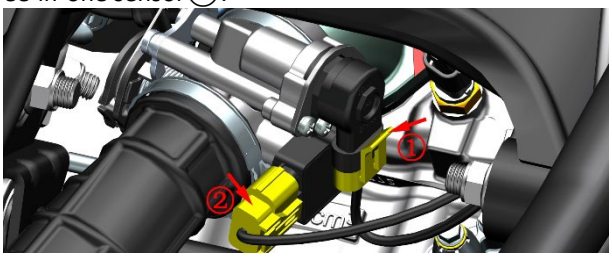

b. Place the small container under the high-pressure oil pipe, press the buckle indicated by③ and pull out the high-pressure oil pipe(1) in the direction of the arrow at the same time. A small amount of fuel will flow out when it is pulled out, and it is forbidden to drip onto the surface of the part.



c. Find the circlip at the bottom of the valve body (2) pinch both ends of the circlip with your hands and move it out, and then pull out the desorption tube (3).

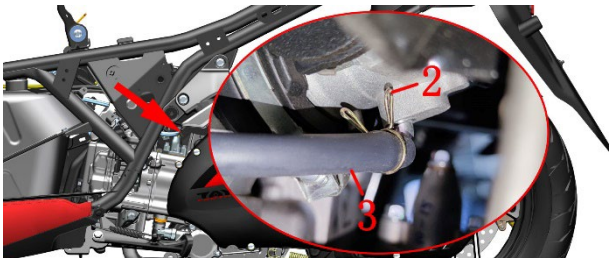

d. Loosen the bolt of the clamp(4) with a 4# inner hexagon and pull out the air filter outlet pipe(5) and clamp(6) in the direction of the arrow to pull out the throttle valve body.

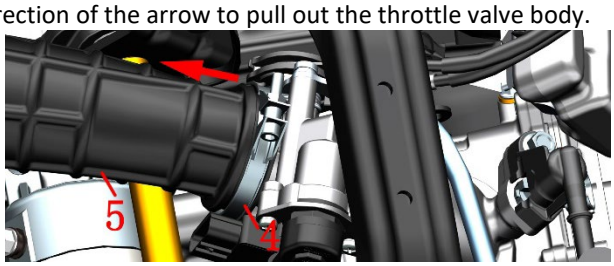

e. Use 5# inner hexagon to remove 2 bolts(6) and then remove the valve body assembly from the engine.

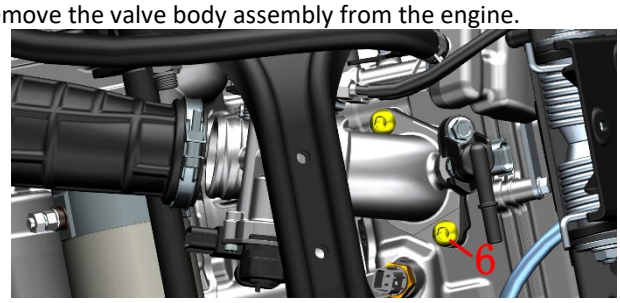

f. Remove the heat insulation pad and O-ring assembly, and remove the O-ring(10). Use a 4# inner hexagon to loosen the clamp(9) and separate the intake manifold from the valve body assembly. Use 2 10# open-end wrenches to loosen the two nuts of the fuel line(8) and then pull them out to remove them from the bracket; take out the cylinder end of the throttle line from the turntable. After the two nuts of the oil return line(7) are loosened, completely loosen the nut at the bottom of the threaded sleeve, and then pull out the bracket in the direction of the axis.

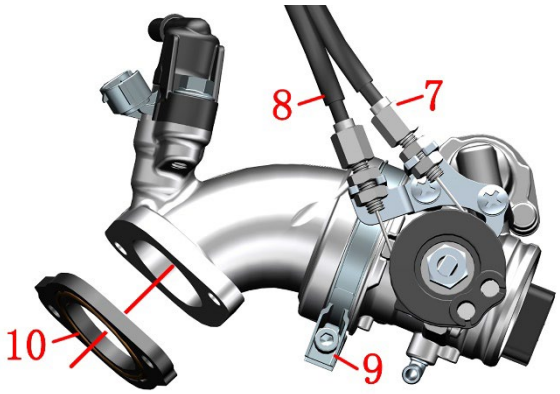

g. Use throttle valve body cleaning agent to clean the carbon deposits on the intake manifold and throttle valve body outlet respectively. It is forbidden to directly soak the throttle valve body assembly and intake manifold assembly with any liquid.

h. After cleaning the heat insulation pad, replace 2 new O-rings(10) and assemble them in place. Wipe clean the contact surface of the intake manifold and the heat insulation pad and the end surface of the heat insulation pad and the engine. Reversely reset all materials in the order of disassembly.

4. M310 Disassemble the three-in-one sensor

a. If the idling speed is abnormal, it is easy to extinguish and the spark plug and high voltage coil are eliminated, the three-in-one sensor needs to be removed for investigation. It should not be disassembled under normal circumstances.

b. Refer to the steps for removing carbon deposits without disassembling the throttle valve body, and unplug the plugs of the stepping motor① and the CTS three-in-one sensor②. Remove the stepper motor. After turning off the power, take out the stepping motor, do not loosen the cable plug, press the flameout switch at startup without ignition, check whether the motor plug can shrink back and forth, and finally turn off the flameout switch to check whether the plug returns to its original position.

To check whether the stepper motor is abnormal, measure whether the resistance at both ends of A and B is 53±5.3Ω. Bolts for fixing the stepper motor: GB9074.4 M4×12.

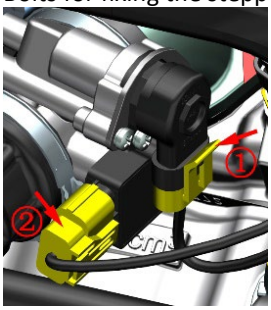

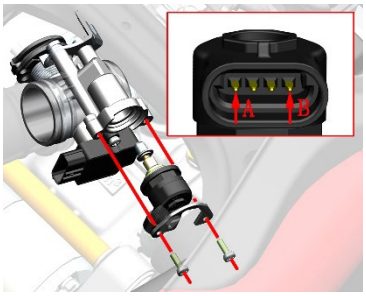

c. Use a short Phillips screwdriver to remove the 2 GB9074.4 M4×16 bolts③ that comes with the throttle valve body assembly, and then remove the the anti-off card④, and then take off the stepper motor. It is forbidden to soak the sensor with any liquid.

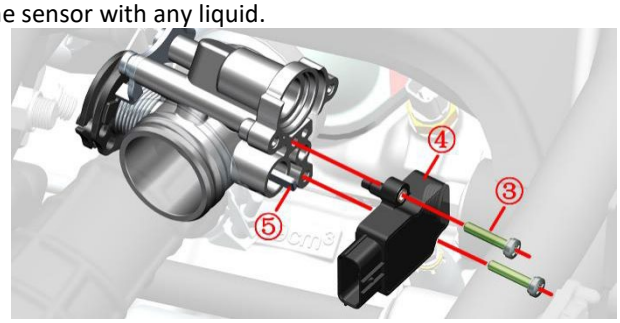

d. Wipe clean the sensor head or replace with a new three-in-one sensor, align the three-in-one sensor with the shaft⑤ and install it back on the valve body. Reinstall the stepper motor.



5. M350/368 Disassemble the sensor

If the idle speed is abnormal, it is easy to stall, and the spark plug and high voltage coil are excluded, the sensor needs to be removed for troubleshooting. It should not be disassembled under normal circumstances.

a. Repeat the previous steps to remove the seat cushion and bolts on the rear before proceeding to the next step. Remove the 4 expansion nails on both sides of the front.



b. Use the 4# hex socket to remove the M6x16 bolts on both sides.

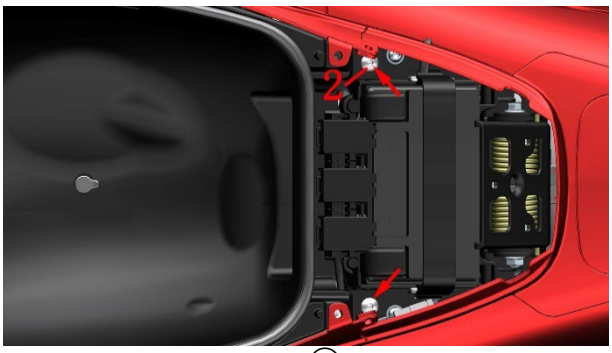

C.Unplug the stepper motor ① and throttle position sensor ②.

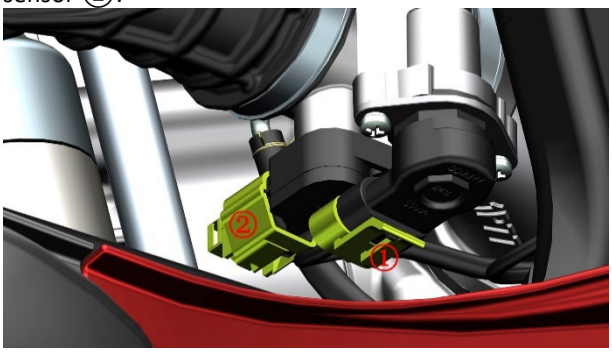

d. Use a short Phillips screwdriver to remove the two GB9074.4 M4x12 bolts (3) and the stripper card (4) from the throttle body assembly, and then remove the stepper motor.

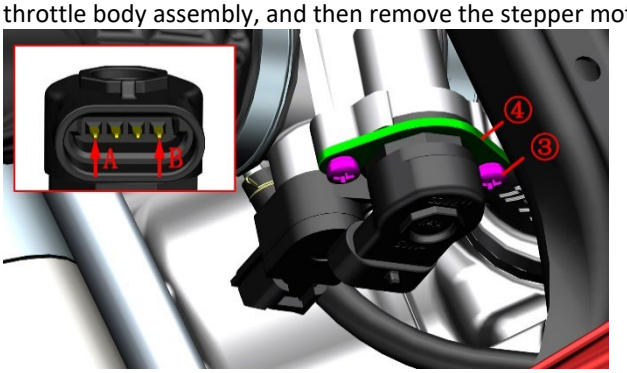

Simple test method: After power off, take out the stepper motor, do not loosen the cable plug, press the flameout switch at the start of the machine, no lighting, check whether the motor plug can shrink back and forth, finally turn off the flameout switch, check whether the plug is back to the original position.

To check whether the stepper motor is abnormal, you can measure whether the resistance at both ends of A and B is 53±5.3Ω.

e. Use a short Phillips screwdriver to remove the M5 x16 bolt ⑤ from the throttle valve assembly and remove the position sensor. Please align the rotation axis ⑥ when installing it back.

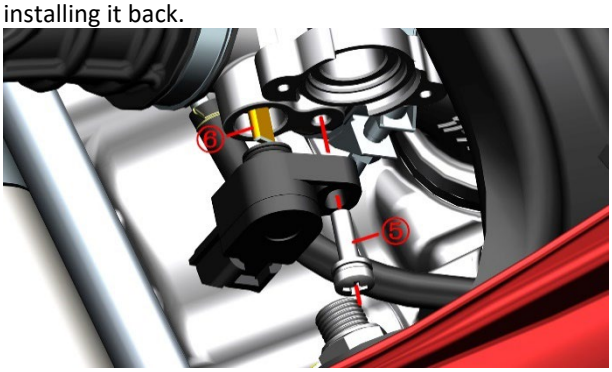

Simple test method: The vehicle is connected with the diagnostic instrument, press the flameout switch (no need to fire), turn the throttle handle from the initial position to the full open, this process to check whether the throttle position signal changes from 0 to 100.

Position Sensor output voltage idle position: 0.7±0.1V; Full open position: 3.6-3.9V, input voltage DC5V±0.1V.

f. Check the external intake pressure sensor:

Loosen the connector and check whether the pin is skewed or broken.

The vehicle is connected to a diagnostic instrument, without ignition, to detect engine parameters and check whether the pressure parameters are consistent with the local atmospheric pressure.

If it is necessary to remove the intake pressure sensor, hold the bushing and use the 8# short sleeve to remove the bolt(3).If it is inconvenient to operate, remove the battery and electrical parts box before proceeding.Clamp the bottom clamp with the pliers, move up to the top, remove the intake pressure sensor connection hose (5) and sensor. Then remove the hose from the sensor.

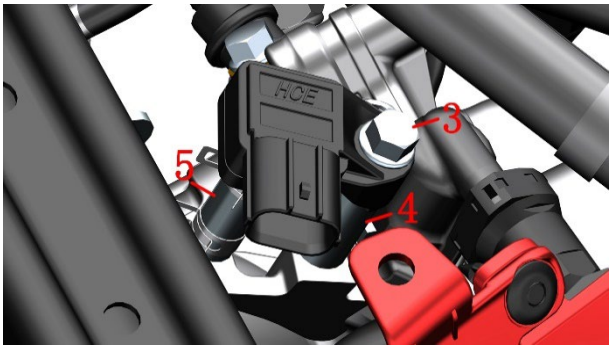

6. Throttle valve body troubleshooting process

Mechanical Throttle Body

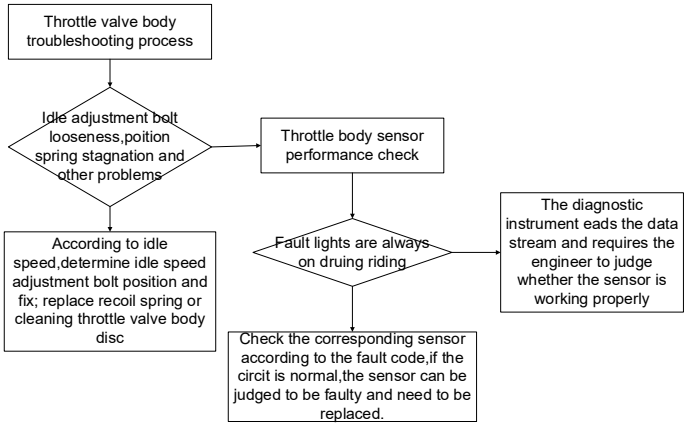

DANGER

●The vehicle must be parked on a flat and stable ground or a lifting platform.
●Once the engine and muffler have cooled down, the operation can be performed.
●When removing the high-pressure fuel pipe, prevent the fuel from dripping onto the surface of the part.
●Smoking, making calls, etc. are prohibited in the workplace.

CAUTION

●Remove the throttle valve body to clean the carbon deposits and operate in a dust-free and dust-free environment to prevent dust from entering the inside of the engine.
●Prevent foreign matter from falling into the engine or air filter.
●If the stepper motor, three-in-one sensor and heat insulation pad are disassembled, do not miss the sealing ring and make sure that the sealing ring is assembled in place without cutting edges.
●Do not use carburetor cleaner or compressed air to clean the throttle valve body.
●The EFI system needs to be reset after reinstalling the battery. The specific method is as follows:
a. Unlock the vehicle and support the main bracket;
b. Pinch the brake and start the vehicle;
c. Pull the engine speed above 3000 rpm;
d. After releasing the throttle, turn off the flameout switch and lock the car;
e. After waiting for 5 seconds, unlock the vehicle again to complete the reset of the EFI system.

M125/155 Throttle valve body

Caution:
●The position sensor and stepper motor cannot be immersed in any liquid.
●It is forbidden to adjust the idle speed adjustment screw on the valve body.
●The 125(2024)/155 steps are similar to the M125, taking the M125 as an example.

1. Do not dismantle the throttle body to clean up carbon deposits

a. In the process of riding, without affecting safety and complying with traffic laws, appropriately increase the throttle to increase the speed to more than 7000 and continue riding for no less than 2 minutes. High-speed scavenging can effectively remove carbon deposits.
b. Use a regular and qualified fuel cleaner to add in the amount indicated. Frequent use may cause damage to the oil supply line.

2. Remove the stepper motor and clean up carbon deposits

a. After opening the seat cushion, use 10# sleeve + ratchet wrench to remove 3 nuts(1). Remove the seat cushion and put it away. Be careful not to put it directly on the ground and avoid scratching the cushion skin.

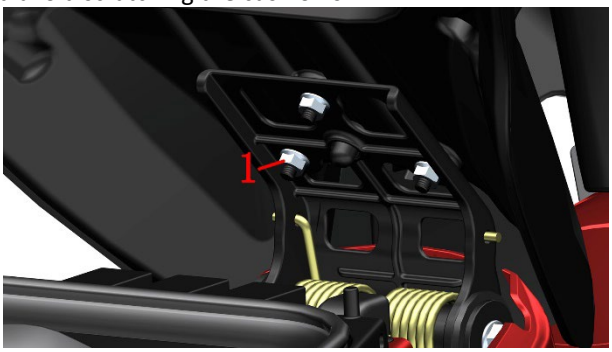

b. Use 4# inner hexagon to press down 2 swell nails(2) center cylindrical pins, and then remove it.

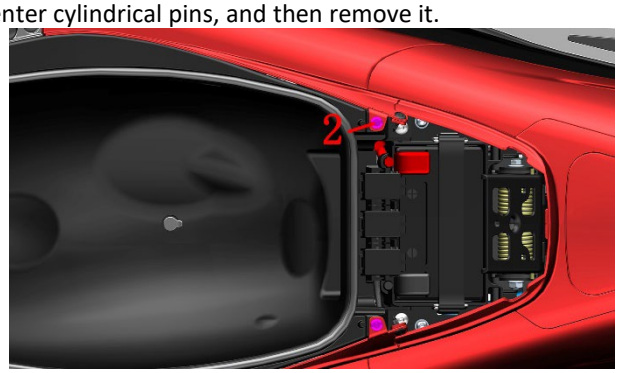

Use 4# inner hexagon to removed 2 pcs M6×16 bolts(3).

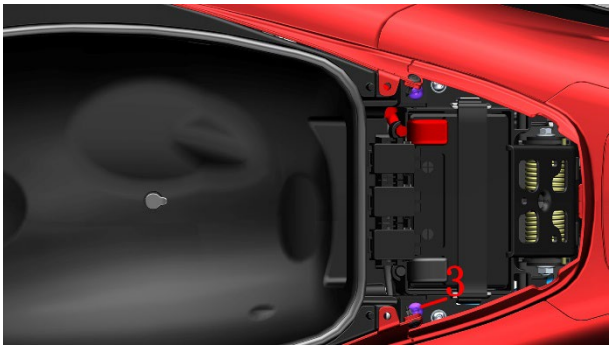

c. Remove the decorative buckle(8) of the M6 hexagon socket bolt; remove the M6×16 bolts(3) on both sides with 4# hex socket.

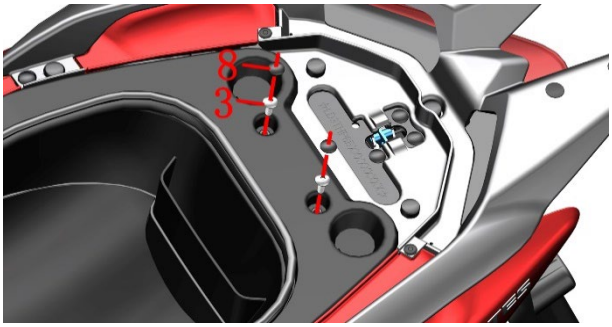

d. Grasp the tail skirt of the storage box and pull it upward obliquely, paying attention to the cables iny the battery compartment. Pull up to see the left side of the glove box atmosphere lamp thread, unplug the thread and remove the glove box assembly.



e. Use 4# inner hexagon to loosen 2 pcs bolts come with the pipe clamp.

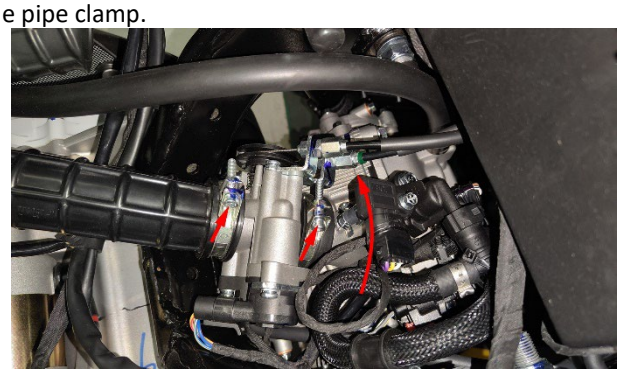

Rotate the throttle body so the stepper motor plug is facing up.Unplug the plug of the stepping motor①.

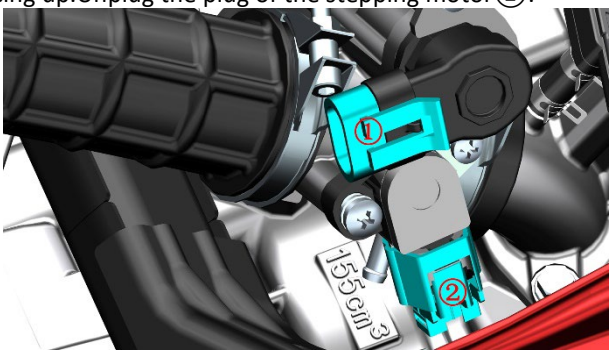

f. Use a short Phillips screwdriver to remove the 2 GB9074.4 M4×12bolts③ and the anti-off card④ that come with the throttle valve body assembly, and then remove the stepping motor.

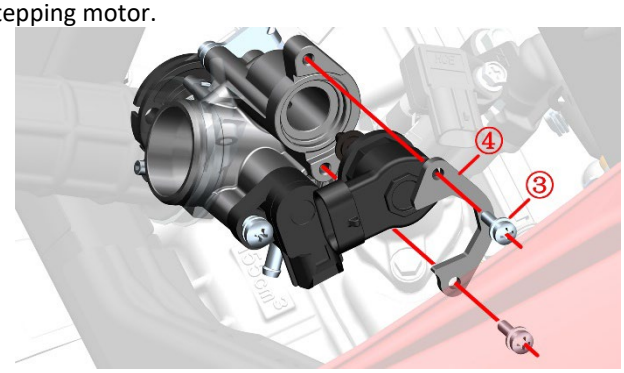

g. Use throttle cleaner to clean the carbon deposits on the head of the stepper motor. Spray a small amount of cleaning agent into the valve body hole. It is forbidden to soak the stepper motor with any liquid.

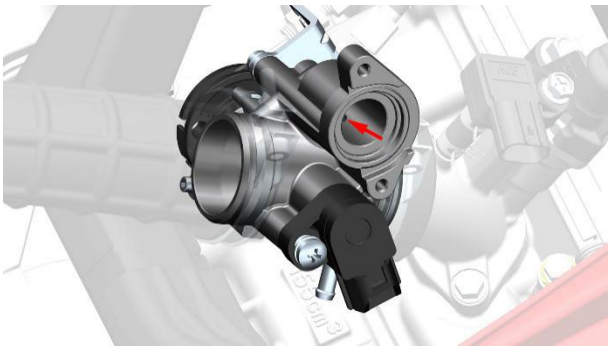

o. Install the stepper motor back to the valve body, paying attention not to miss the sealing ring. Plug the plug back in.

3. Remove the throttle valve body assembly to clean up carbon deposits

a. Refer to the previous steps to loosen the bolts that come with the clamp, then rotate the throttle valve body assembly so that the stepping motor plug faces upwards. Unplug the stepping motor and throttle position sensor plugs.



b. After unplugging the desorption pipe at the bottom, pull out the air filter outlet pipe and then remove the throttle valve body assembly.

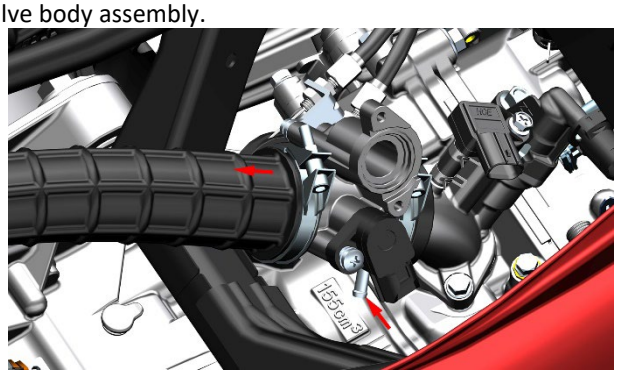

c. After cleaning the carbon deposits, put it back.

4. Disassemble the sensor

a. If the idling speed is abnormal, it is easy to extinguish and the spark plug and high voltage coil are eliminated, the ensor needs to be removed for investigation. It should not be disassembled under normal circumstances.

b. Refer to the steps for removing carbon deposits without disassembling the throttle valve body, and unplug the plugs of the stepping motor① and the sensor②.

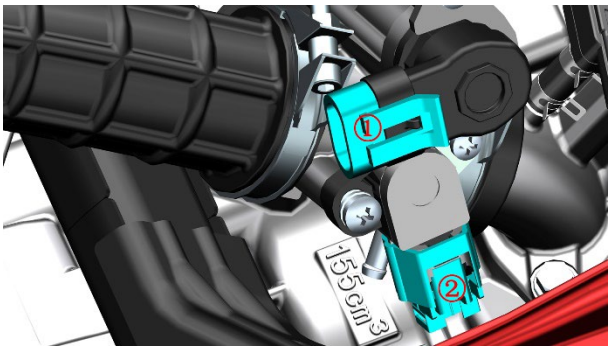

c. Use a short Phillips screwdriver to remove the 2 bolts③ that comes with the throttle valve body assembly, and then remove the three-in-one sensor④.It is forbidden to soak the sensor with any liquid.

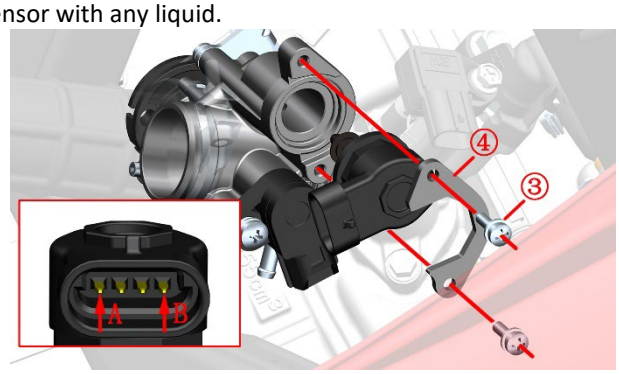

Simple test method:

After turning off the power, take out the stepping motor, do not loosen the cable plug, press the flameout switch at startup without ignition, check whether the motor plug can shrink back and forth, and finally turn off the flameout switch to check whether the plug returns to its original position.

To check whether the stepper motor is abnormal, measure whether the resistance at both ends of A and B is 53±5.3Ω.

d. Use a short Phillips screwdriver to remove the GB9074.4 M5×16 bolts ⑤ that come with the throttle valve body assembly, and remove the position sensor. Be careful to align the hinges ⑥ when you put them back together.

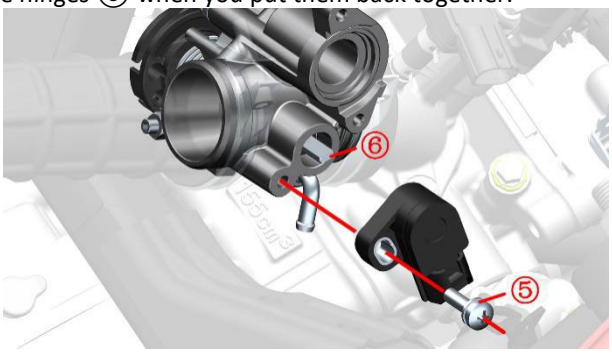

Connect the diagnostic instrument to the whole vehicle, press the flameout switch (without ignition), turn the throttle handle from the initial position to fully open, and check whether the throttle position signal changes from 0 to 100.

e. Check whether the external intake pressure sensor is damaged

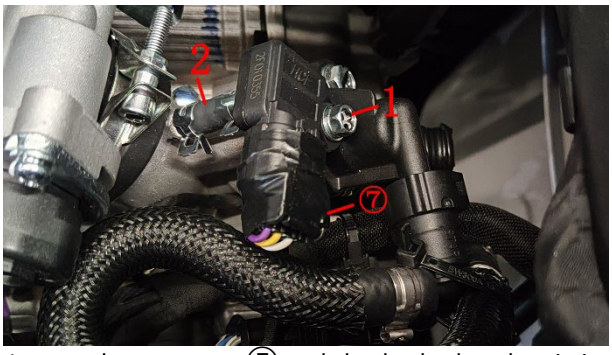

Loosen the connector⑦ and check whether the pin is skewed or broken. The vehicle is connected to the diagnostic instrument without ignition. Check the engine parameters to see whether the pressure parameters are consistent with the local atmospheric pressure.

If you need to remove the intake pressure sensor, use an 8# short sleeve to remove the bolt (1). Use pliers to clamp the clamp at the bottom, move it up to the top, and then remove the intake pressure sensor connecting hose (2) and the sensor together. Then remove the hose from the sensor.

5. Throttle valve body troubleshooting process

Mechanical Throttle Body

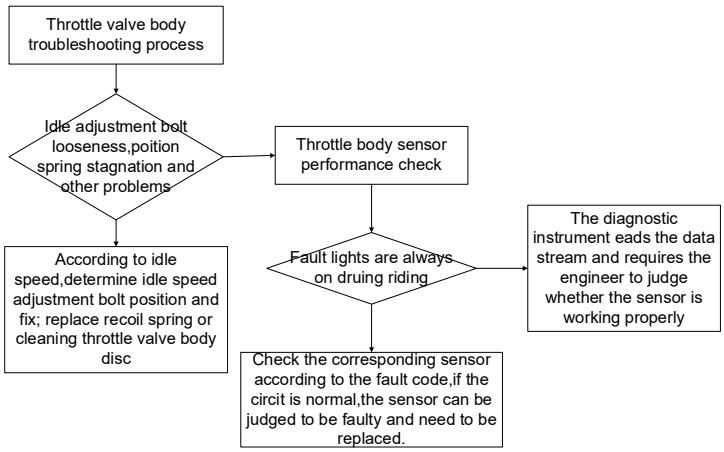

DANGER

●The vehicle must be parked on a flat and stable ground or a lifting platform.

●Once the engine and muffler have cooled down, the operation can be performed.

●When removing the high-pressure fuel pipe, prevent the fuel from dripping onto the surface of the part.

●Smoking, making calls, etc. are prohibited in the workplace.

CAUTION

●Remove the throttle valve body to clean the carbon deposits and operate in a dust-free and dust-free environment to prevent dust from entering the inside of the engine.

●Prevent foreign matter from falling into the engine or air filter.

●If the stepper motor, sensor and heat insulation pad are disassembled, do not miss the sealing ring and make sure that the sealing ring is assembled in place without cutting edges.

●Do not use carburetor cleaner or compressed air to clean the throttle valve body.

●The EFI system needs to be reset after reinstalling the battery.The specific method is as follows:

a. Unlock the vehicle and support the main bracket;

b. Pinch the brake and start the vehicle;

c. Pull the engine speed above 3000 rpm;

d. After releasing the throttle, turn off the flameout switch and lock the car;

e. After waiting for 5 seconds, unlock the vehicle again to complete the reset of the EFI system.

Throttle cable

1. Inspection

a. Check whether the rubber sleeve of the right hand handle and the throttle cable are damaged.

b. Check whether the rubber sleeve of the right hand rotates smoothly and whether it can return automatically.

c. Hold the steering wheel with both hands and turn the right hand to the right while rotating the rubber sleeve of the right handle. Every time you turn a certain steering angle, confirm whether the throttle can be reset normally. If you can't reset it, you need to lubricate the cable or the inside of the right handle; or replace it with a new throttle cable or the rubber sleeve of the right handle.

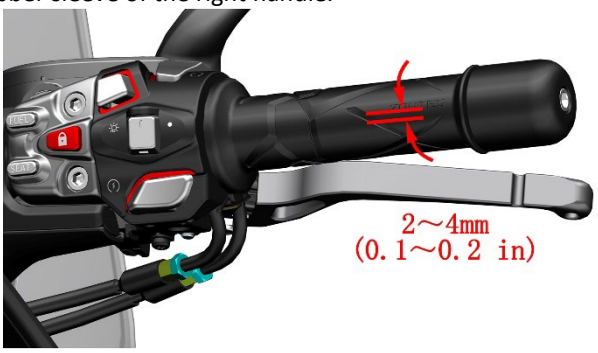

d. After starting the engine, turn the steering handle left and right to ensure that the idling speed does not change during the steering process, and then turn off the engine.

e. Rotate the right hand to check whether the rubber sleeve inspection cable gap is within 2～4mm (0.1～0.2 in).

2. Adjust the throttle cable clearance

M125/155/310/350

a. Fix the adjusting screw② with a 8# open-end wrench, and then use a 10# open-end wrench to loosen the nut① counterclockwise. Rotate the adjustment solenoid② clockwise to reduce the free stroke, counterclockwise to expand; adjust the gap to the specified value. After adjusting the gap, tighten the nut①.

Torque: 3.8 N.m (0.4 kgf.m, 2.8 lbf.ft).

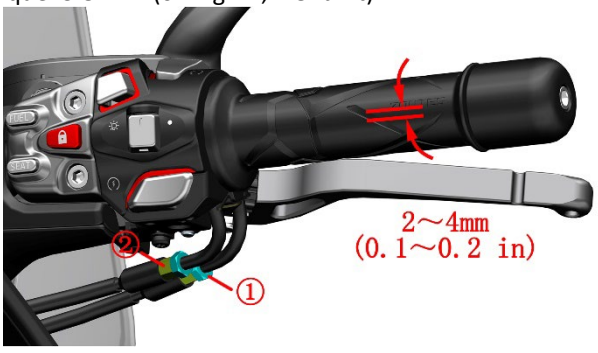

M368

Moved away the rubber,then fix the adjusting screw② with a 8# open-end wrench, and then use a 10# open-end wrench to loosen the nut① counterclockwise. Rotate the adjustment solenoid② clockwise to reduce the free stroke, counterclockwise to expand; adjust the gap to the specified value. After adjusting the gap, tighten the nut①.

Torque: 3.8 N.m (0.4 kgf.m, 2.8 lbf.ft).

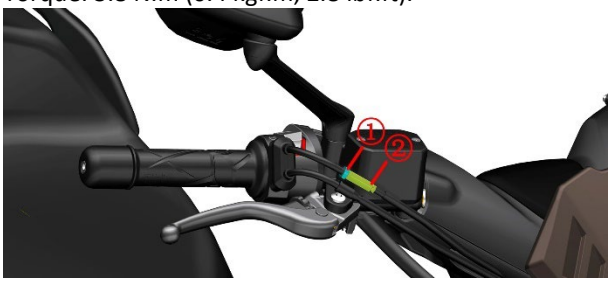

b. If the above adjustment fails to achieve the desired effect, please refer to the description in "Remove the throttle valve body assembly to clean up carbon deposits" to remove the throttle valve body assembly. Use a 10# open-end wrench to loosen the 2 nuts on the bracket to adjust. Torque: 3.0 N.m (0.3 kgf.m, 2.2 lbf.ft).

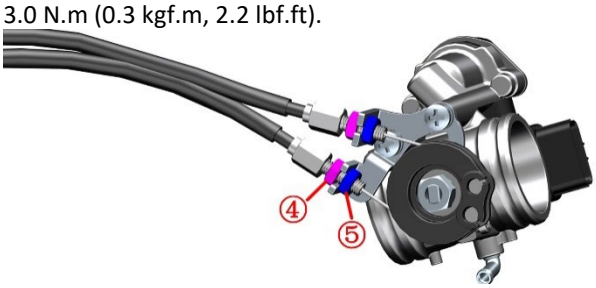

c. If the above two adjustments are invalid, replace the throttle cable with a new one.

3. Lube door cable

If the rotation resistance is large and the bending of the throttle cable and the loose strands of the wire core can be eliminated, add a proper amount of lubricating oil, such as sewing machine oil.

a. Remove 2 bolts(1) with a 5# inner hexagon, and move the upper part of the switch away.



b. Use a syringe to draw a small amount of sewing machine oil several times and inject it from the gap between the throttle cap and the thread core, and turn the throttle while injecting.

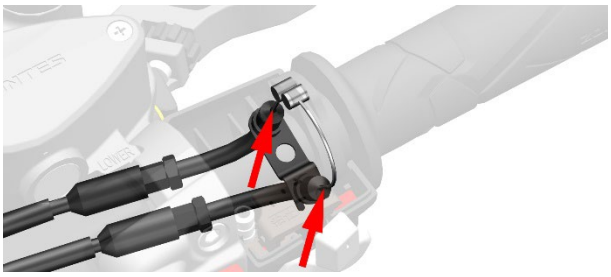

c. If the problem with high resistance cannot be solved after lubrication, the throttle cable needs to be replaced.

WARNING

●After adjusting the gap of the throttle cable, make sure that the throttle handle can be automatically turned back to the closed position. Do not adjust the cable to increase the engine idling speed.

●After the adjustment, the engine idling speed cannot increase when turning the front of the car.

●Do not use high-viscosity oil to lubricate the cable to prevent excessive viscosity from affecting the free movement of the cable.

4. M368(ETC)

Electronic throttle models do not require adjustment of the free angle.

Idle speed

Caution:

●Before checking the idle speed, you should check other engine maintenance items and the condition is normal before proceeding.

●Check the following items before checking the idle speed:

The maintenance indicator light "🔧" should not light up.

The status of the spark plug has been checked.

The air filter element and the air inlet element have been inspected or replaced.

Check the throttle clearance.

●The limit screw on the valve body is not allowed to be adjusted privately.

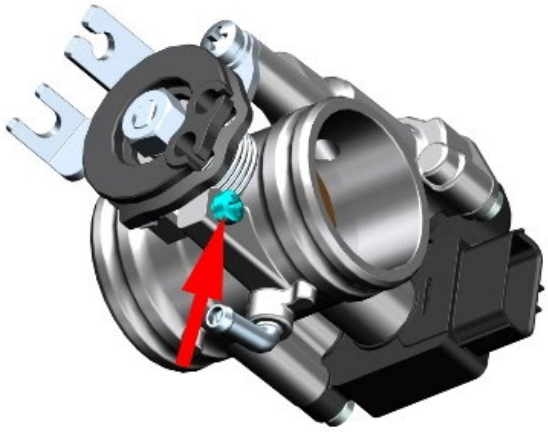

Check idle speed:

Check the idling speed of the engine when the engine is warm.

M310/350/368 the idle speed range of the engine should be 1500-1700 rpm.

M125/155 the idle speed range of the engine should be 1400-1600 rpm.

If the idling speed is not within the standard range or the idling speed is stalled, it should be checked and handled by professional service personnel at the designated maintenance point of Shengshi or a qualified maintenance organization.

Abnormal idling or flameout should be checked or repaired according to the troubleshooting procedure in the chapter "Electronic Injection System" of this manual.

Fuel evaporative pollutant control system

M310/250 fuel evaporation

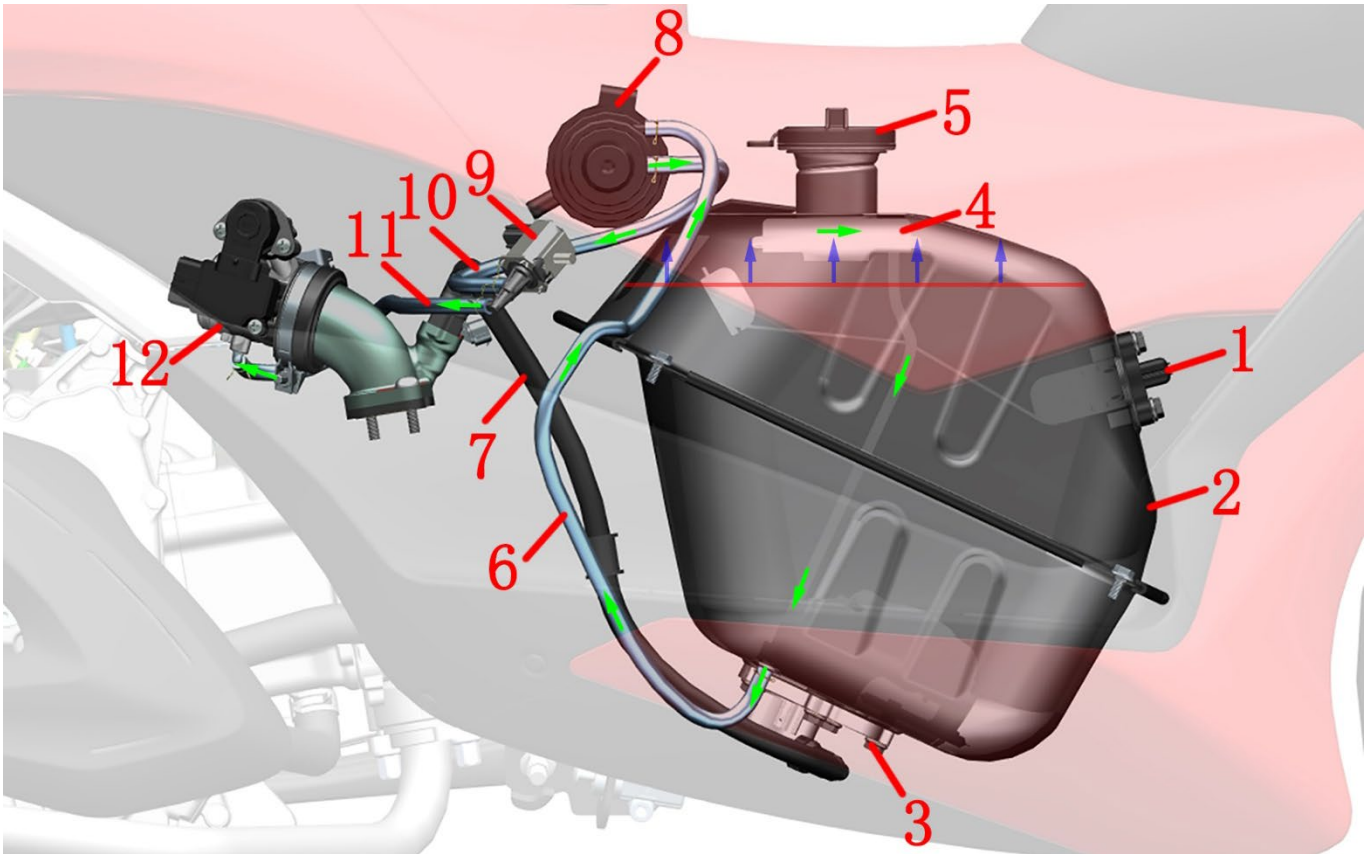

1- Fuel level sensor 2- Fuel tank 3- Fuel pump 4- Oil-air separator (welded inside the fuel tank) 5- Fuel tank cap 6- Adsorption/vent pipe 7-High pressure fuel pipe 8-Carbon tank 9-Carbon tank solenoid valve 10- Solenoid valve intake pipe 11- solenoid valve outlet pipe 12-throttle valve body assembly

Remarks: The carbon canister assembly includes carbon canister 8, adsorption/vent pipe 6, solenoid valve inlet pipe 10, and solenoid valve outlet pipe 11. The carbon canister components are sold as a complete set and are sold separately without being disassembled. If the vent tube is damaged, you can purchase a reliable and weather-resistant hose with the same or similar inner and outer diameters.

M125/155/150 fuel evaporation

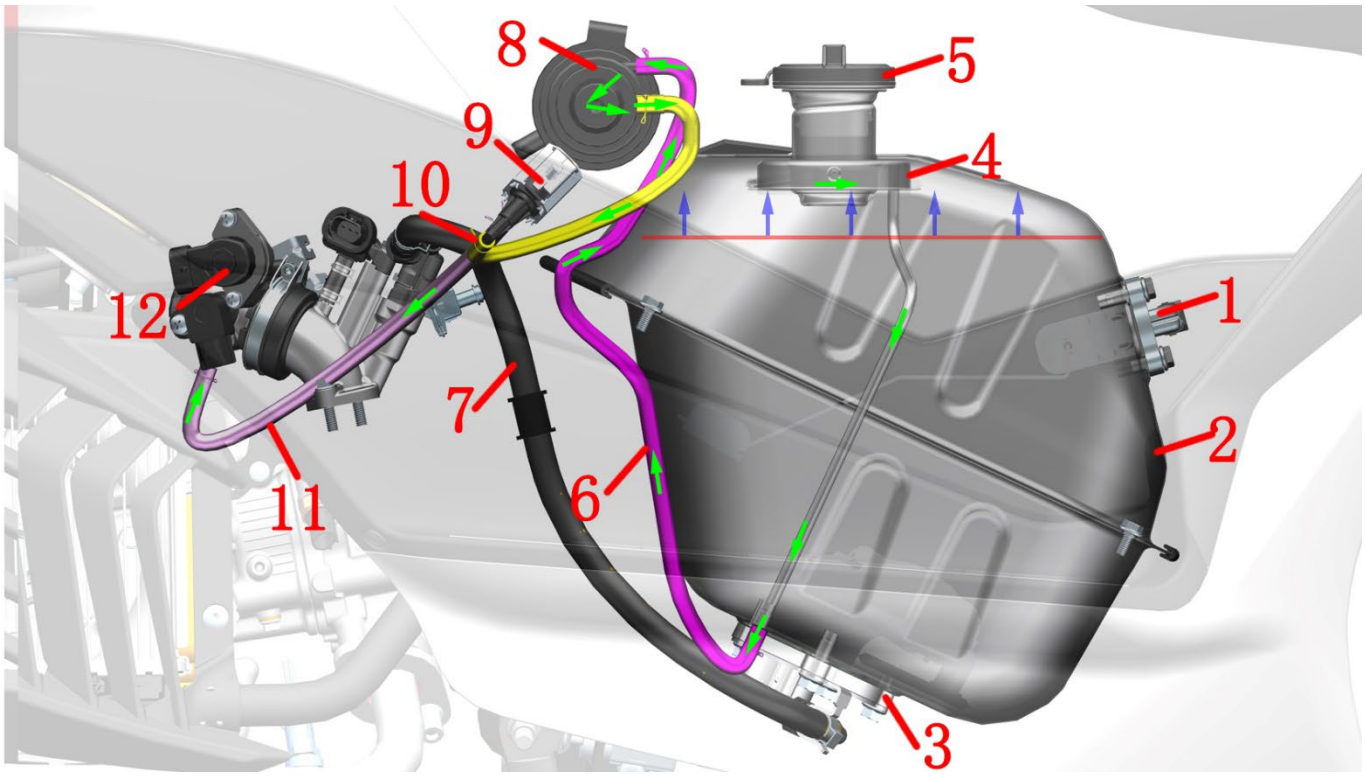

1- Fuel level sensor 2- Fuel tank 3- Fuel pump 4- Oil-air separator (welded inside the fuel tank) 5- Fuel tank cap 6- Adsorption/vent pipe 7-High pressure fuel pipe 8-Carbon tank 9-Carbon tank solenoid valve 10- Solenoid valve intake pipe 11- solenoid valve outlet pipe 12-throttle valve body assembly

Fuel evaporation:
Oil and gas → oil and gas separator (inside the oil tank) → adsorption/vent pipe → solenoid valve intake pipe → solenoid valve outlet pipe → throttle valve body assembly → intake manifold → cylinder

M350 fuel evaporation

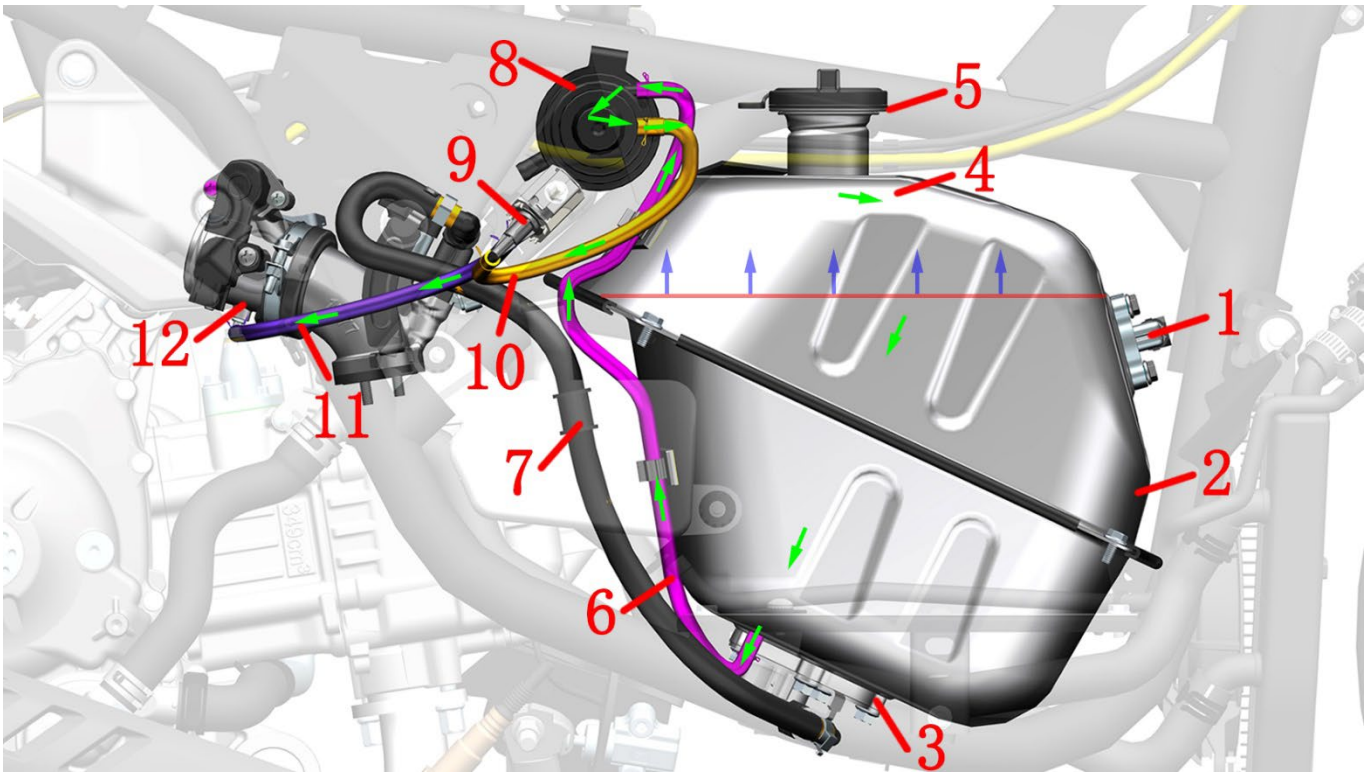

1- Fuel level sensor 2- Fuel tank 3- Fuel pump 4- Oil-air separator (welded inside the fuel tank) 5- Fuel tank cap 6- Adsorption/vent pipe 7-High pressure fuel pipe 8-Carbon tank 9-Carbon tank solenoid valve 10- Solenoid valve intake pipe 11- solenoid valve outlet pipe 12-throttle valve body assembly

Fuel evaporation:
Oil and gas → oil and gas separator (inside the oil tank) → adsorption/vent pipe → solenoid valve intake pipe → solenoid valve outlet pipe → throttle valve body assembly → intake manifold → cylinder

The fuel evaporative pollutant control system can only be checked after the cover is removed.
Check the carbon canister for cracks or damage.
Check the suction/vent pipe for cracks or damage.
Check whether the solenoid valve of the carbon canister is working properly.
Check whether the solenoid valve inlet and outlet pipes are cracked or damaged.
Check whether the hoses are bent, causing the airflow to be unsmooth.

M368 fuel evaporation

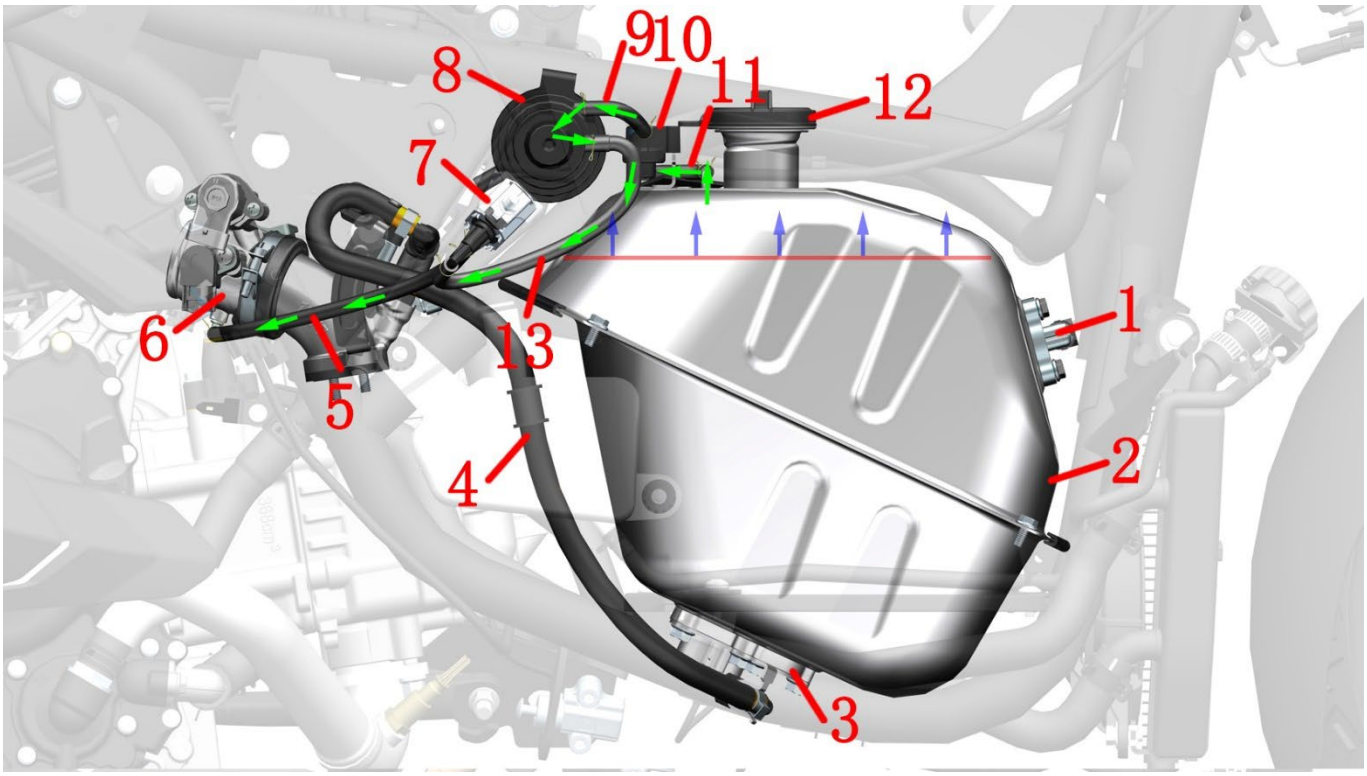

1- Fuel level sensor 2- Fuel tank 3- Fuel pump 4- High pressure fuel pipe 5- Solenoid valve outlet pipe 6-Throttle valve body assembly 7- Carbon tank solenoid valve 8-Carbon tank 9- Adsorption pipe 10- External oil and gas separator 11-Vent pipe 12-Fuel tank cap 13- Solenoid valve intake pipe

Fuel evaporation:
Oil and gas → Vent pipe → External oil and gas separator → Adsorption pipe → Carbon tank → solenoid valve intake pipe → solenoid valve outlet pipe → throttle valve body assembly → intake manifold → cylinder

The fuel evaporative pollutant control system can only be checked after the cover is removed.
Check the carbon canister for cracks or damage.
Check the suction/vent pipe for cracks or damage.
Check whether the solenoid valve of the carbon canister is working properly.
Check whether the solenoid valve inlet and outlet pipes are cracked or damaged.
Check whether the hoses are bent, causing the airflow to be unsmooth.

M368（ETC） Fuel evaporation

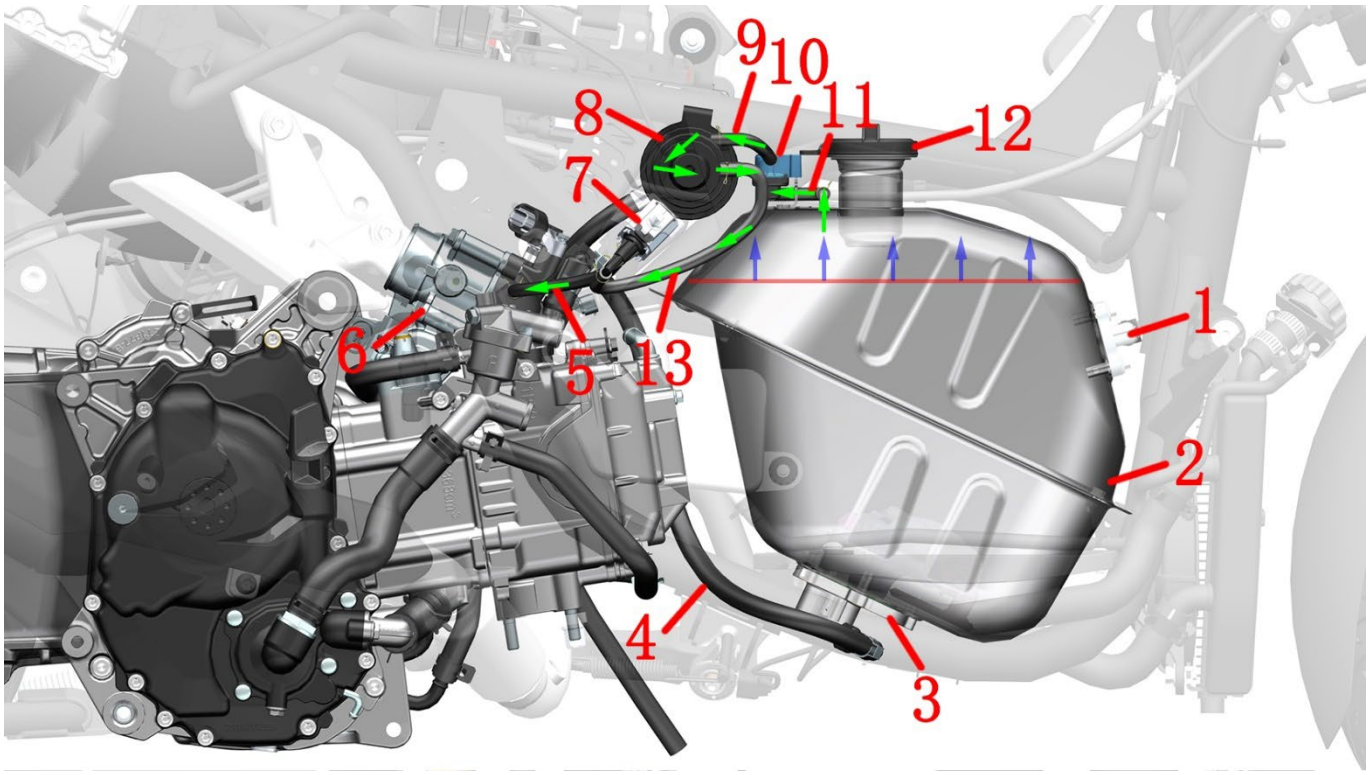

1 - Oil level sensor 2 - Fuel tank 3 - Fuel pump 4 - High-pressure fuel pipe 5 - Solenoid valve outlet pipe 6 - Throttle body assembly 7 - Canister solenoid valve 8 - Canister 9 - Canister adsorption pipe 10 - External oil-gas separator 11 - Fuel tank ventilation pipe 12 - Fuel tank cap 13 - Solenoid valve intake pipe

Fuel evaporation:

Oil and gas → Fuel tank ventilation pipe → External oil-gas separator → Canister adsorption pipe → Canister → Solenoid valve intake pipe → Solenoid valve outlet pipe → Throttle body assembly → Intake manifold → Cylinder

The fuel evaporative pollutant control system can only be checked after the cover is removed.

Check the carbon canister for cracks or damage.

Check the suction/vent pipe for cracks or damage.

Check whether the solenoid valve of the carbon canister is working properly.

Check whether the solenoid valve inlet and outlet pipes are cracked or damaged.

Check whether the hoses are bent, causing the airflow to be unsmooth.

Radiator

DANGER

●The vehicle must be parked on a flat and stable ground or a lifting platform.
●Once the engine and muffler have cooled down, the operation can be performed.
●Swallowing or inhaling the coolant will cause harm to the human body.

CAUTION

●Regularly check the coolant level, and always keep the position not lower than the "L" line.
●M310 it is recommended to replace the coolant every 4 years or 40,000 kilometers (24855 mile). M350/368/155 it is recommended to replace the coolant every 3 years or 30,000 kilometers 18641 mile).
●Swallowing or inhaling the coolant will cause certain harm to the human body. After each addition of coolant, wash hands, face and any exposed skin thoroughly in time. If swallowed by mistake, immediately contact the poison control center or hospital; if inhaled, immediately go to a ventilated environment. If it accidentally splashes into the eyes, immediately rinse the eyes with a large amount of running water and seek medical advice or consultation in time. Keep away from children and pets.
●The engine coolant must be a model suitable for aluminum radiators, based on ethylene glycol. Use a coolant that is suitable for aluminum radiators, which is a mixture of coolant concentrate and distilled water in a certain proportion. If you need to add water, you can only add distilled water. Other water quality may corrode the engine cooling system or cause more serious consequences.
●It is necessary to select the corresponding antifreeze liquid according to the lowest possible local temperature. The vehicle added to the factory is Total -35°C (-31F) green antifreeze. M310 the total amount of coolant is 1.64L (1.73 US qt, 1.44 lmp qt, 0.43 US gal, 0.36 lmp gal). M350/368 the total amount of coolant is 1.44L(1.52 US qt,1.27 lmp qt,0.38 US gal,0.32 lmp gal). M125/150/155 the total amount of coolant is 0.9L (0.95 US qt,0.79 lmp qt, 0.24 US gal, 0.2 lmp gal).
●Coolant may damage the paint surface. Pay attention when adding it. A small amount of splash should be wiped off with a clean soft cloth immediately.

1.Check the coolant

M125/310/155/150

a. Press the button on the right side of the front storage box switch to open the right storage box cover.



b. After opening, buckle the rubber plug as shown in the figure by hand, and be careful not to use sharp tools or nails to buckle.



c. Right the vehicle and use a flashlight to observe whether the liquid level of the Coolant expansion tank is between "H" and "L". Pay attention to the ground as flat and level as possible, do not inspect on the slope. And the engine needs to be in a cold state.

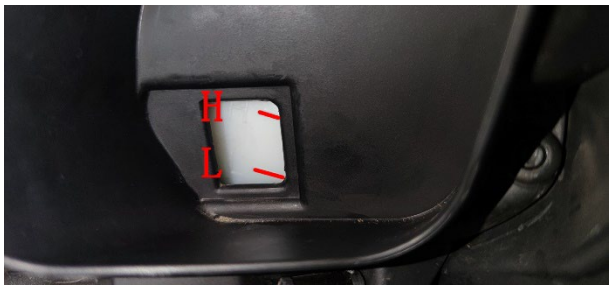

d. Reinstall the rubber plug after checking. Close the right storage box cover.

M350/368/250/368(ETC)

Check the coolant level from the right rear gap with the help of a flashlight.

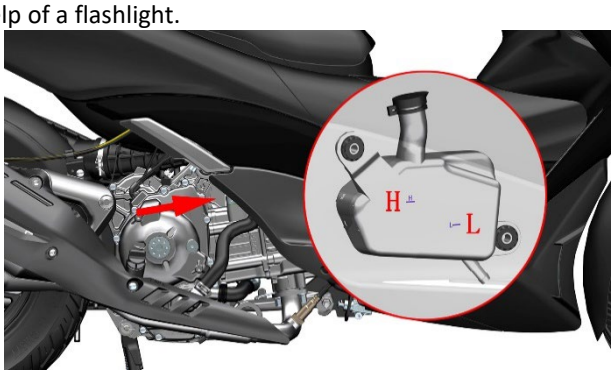

2. Add coolant (antifreeze) to the Coolant expansion tank

M125/310/155/150

If the water level of the Coolant expansion tank is lower than the "L" line, an appropriate amount of coolant must be added. If there is no coolant in the Coolant expansion tank, check the cooling system for leakage first, and it must be repaired before it can be replenished.

a. Use 4# inner hexagon to remove the upper 2 M6×14 bolts.



Remove the swell nail. For instructions on disassembly and assembly of swell nails, please refer to the pre-service instructions in this chapter.

Grasp the upper part of the storage box with one hand, and remove the bottom M6×16 bolt with the 4# inner hexagon with the other hand.

b. Remove the right storage box assembly from the car.

c. Open the cover of the Coolant expansion tank, and add coolant to the Coolant expansion tank with the help of a funnel, paying attention to adding a small amount to between "H" and "L" several times.



M350/368/250/368(ETC)

a. Put down the right rear foot and remove the M6x14 bolt using the 4# hex socket.

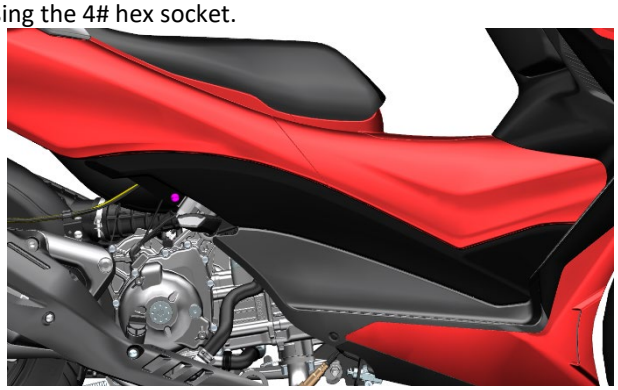

b. Pull it out in the arrow direction (from the rear wheel to the front wheel). Notice that there are 5 pins in the red circle with a buckle around them. It takes a lot of force to pull it out.

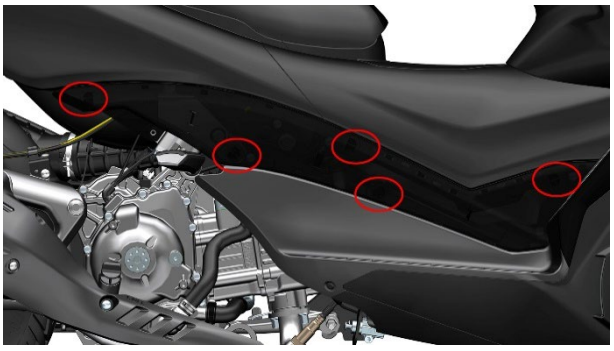

c. Open the rubber cover of the auxiliary water tank, and add an appropriate amount of coolant with the aid of a funnel. Hold the vehicle upright and observe whether the liquid level in the auxiliary water tank is between "H" and "L" with the help of a flashlight.

Pay attention to the flatness and levelness of the ground as much as possible, and do not check it on the slope. And the engine must be cold.

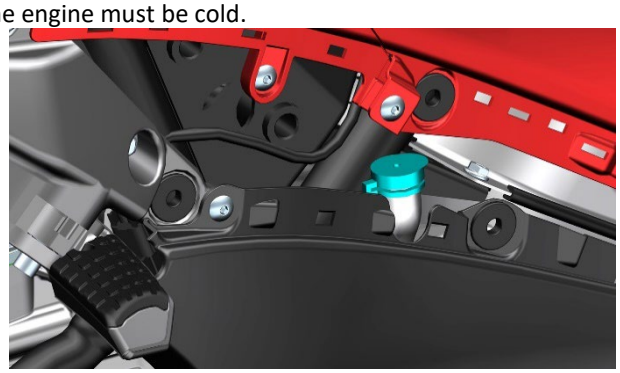

3. Add coolant to the Radiator

M310

a. Refer to the above steps to remove the right storage box assembly.

b. Unscrew the Radiator filler cap indicated by the arrow.

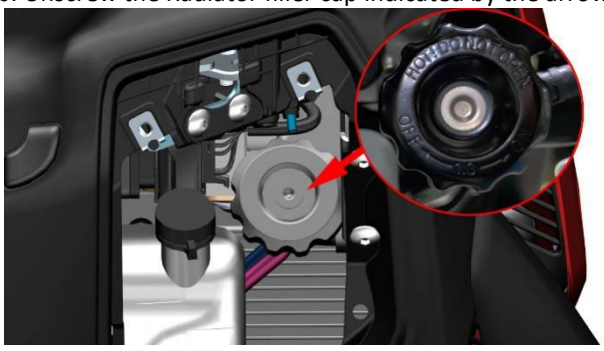

c. Use a 10# sleeve to loosen the thermostat bleed bolt (5) counterclockwise by 4 to 5 turns, do not completely remove it. Note that a small container is required to receive the coolant overflowing from the exhaust bolt. Do not allow the coolant to drip directly onto the surface of the part.

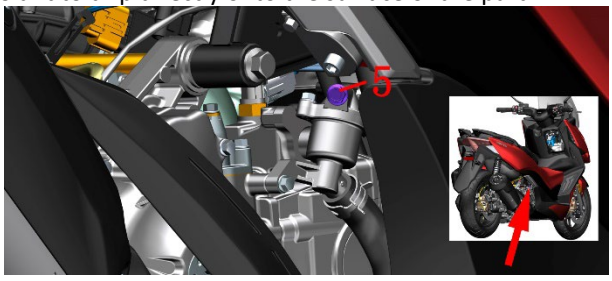

d. Put on waterproof gloves and add coolant to the water inlet of the Radiator with the help of an extended funnel. Until the position of the vent bolt of the thermostat is stably

overflowed with coolant, the coolant level can be seen at the water filling port.

e. Tighten the filler cap of the Radiator. Tighten the exhaust bolt(5); torque: 8～10N.m (0.8～1 kgf.m, 6～7 lbf.ft).

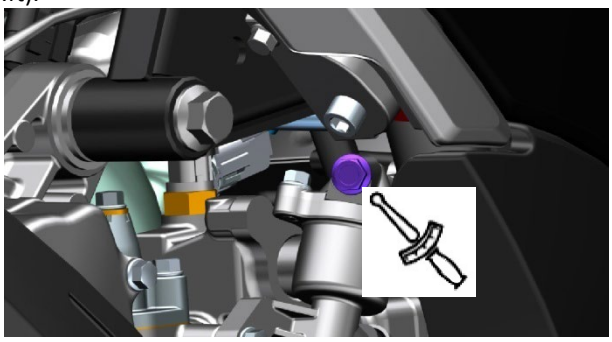

M350/368/250

Turn the front fork to the right to the end, unscrew the cap of main water tank counterclockwise, and then add the coolant. Follow the steps in the M310 to loosen the thermostat bolt and add coolant.



4. Put coolant

M310/350/368/250/368(ETC)

The M350/368/250/368(ETC) steps are similar to the M310, taking the M310 as an example.

a. Place an oil pan underneath, wear waterproof gloves and use a 10# sleeve to remove the drain bolt M6×12(6) and Φ5.6×ϕ1 O ring(7).

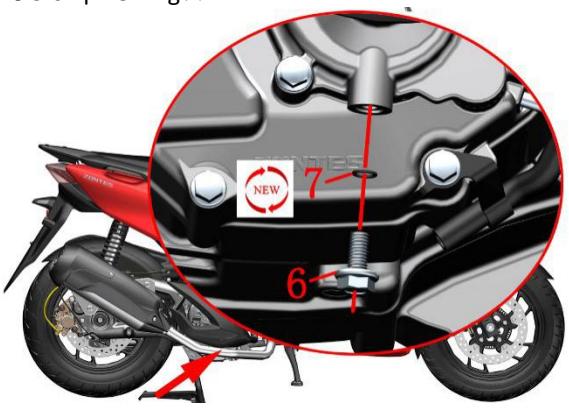

b. Remove the filler cap of the Radiator to accelerate the flow of coolant.

c. Wipe all the joint surfaces clean with a non-woven cloth. Check whether the bolt joint surfaces are scratched, if any, replace them with new ones. The O ring needs to be replaced every time it is disassembled.

d. Put the new O-ring into the bolt(6) first, taking care not to scratch the O-ring. Torque of bolt: 8～10N.m (0.8～1 kgf.m, 6～7 lbf.ft).

M125/155/150

a. After holding the tank cover firmly, remove the three M6x14 bolts with the 4# hex socket and then remove them.

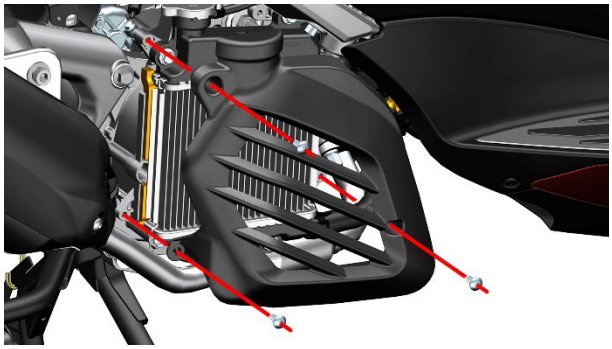

M125

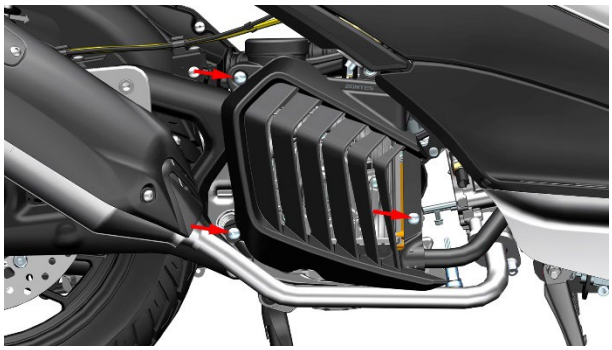

M125 2024 model/150/155

b.Lift the vehicle with the lifting platform, and then remove the M6x10 bolts (1) with the 8# sleeve, remove the 6.3×12×1.6 copper pad, and release the coolant.Unscrew the screws (3) at the bottom of the radiator of the main water tank. Discharge the coolant and pay attention not to miss the O ring (4).

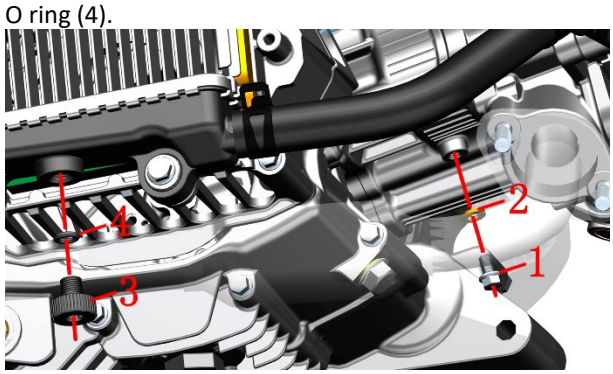

5. Check whether the fins of the radiator water tank are deformed or the air duct is blocked

M310

a. Remove the 4 bolts that fix the radiator guard and then use compressed air or low-pressure water guns, brushes, etc. to remove dirt, sand, insects and other dirt on the surface of the radiator. When using compressed air, be careful not to get too close to the fins. It is forbidden to flush the radiator directly with a high-pressure water gun to prevent the fins from deforming and blocking the air duct.



b. Pull the deformed fins straight with a flat engraving knife or a small flat-blade screwdriver. If the deformed fins exceed 20%, a new heat sink needs to be replaced.

M125/150/155

After removing the water tank cover according to the previous steps, refer to M310 for maintenance.

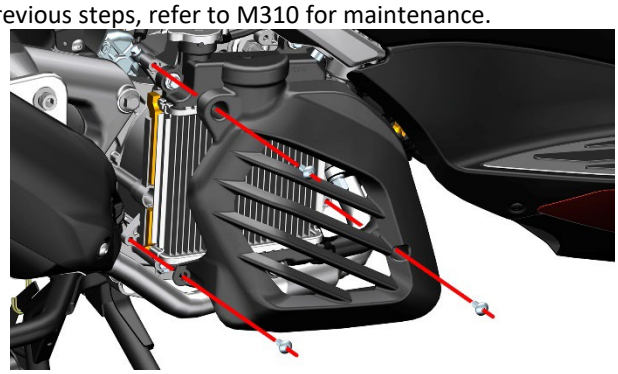

Be careful not to open the water tank cap, once opened, the coolant will flow out from here.

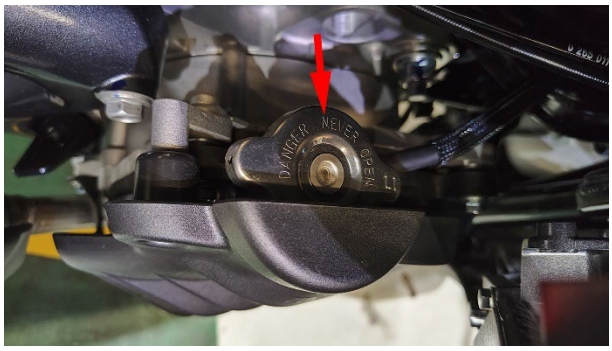

M350/368/250/368(ETC)

Use compressed air or low pressure water gun, brush, etc. to remove sediment, insects and other dirt on the radiator surface. When using compressed air, be careful not to be too close to the fins. It is prohibited to directly flush the radiator with a high-pressure water gun to prevent the fins from deforming and blocking the air duct.



6. Check all water pipes for leaks; aging.

M310

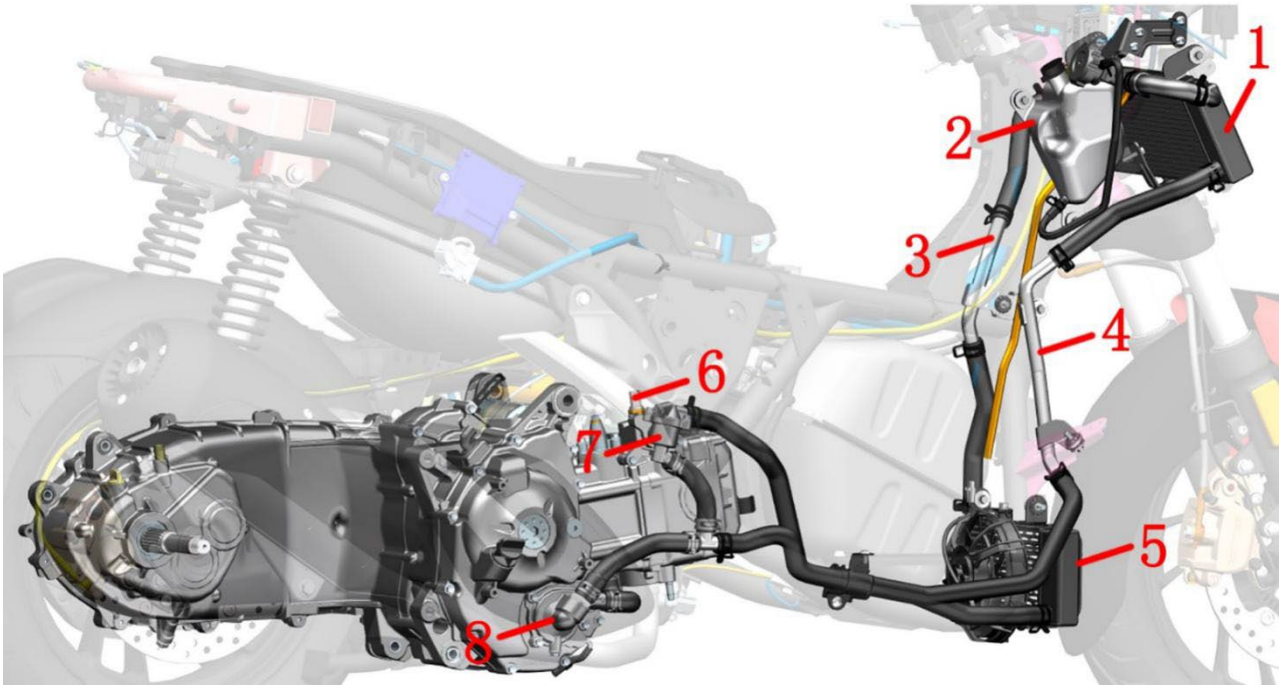

1-Radiator 2-Coolant expansion tank 3-Aluminum water inlet pipe 4-Aluminum water outlet pipe 5-Small radiator 6-Water and oil shared sensor 7-thermostat 8-water pump assembly

M125

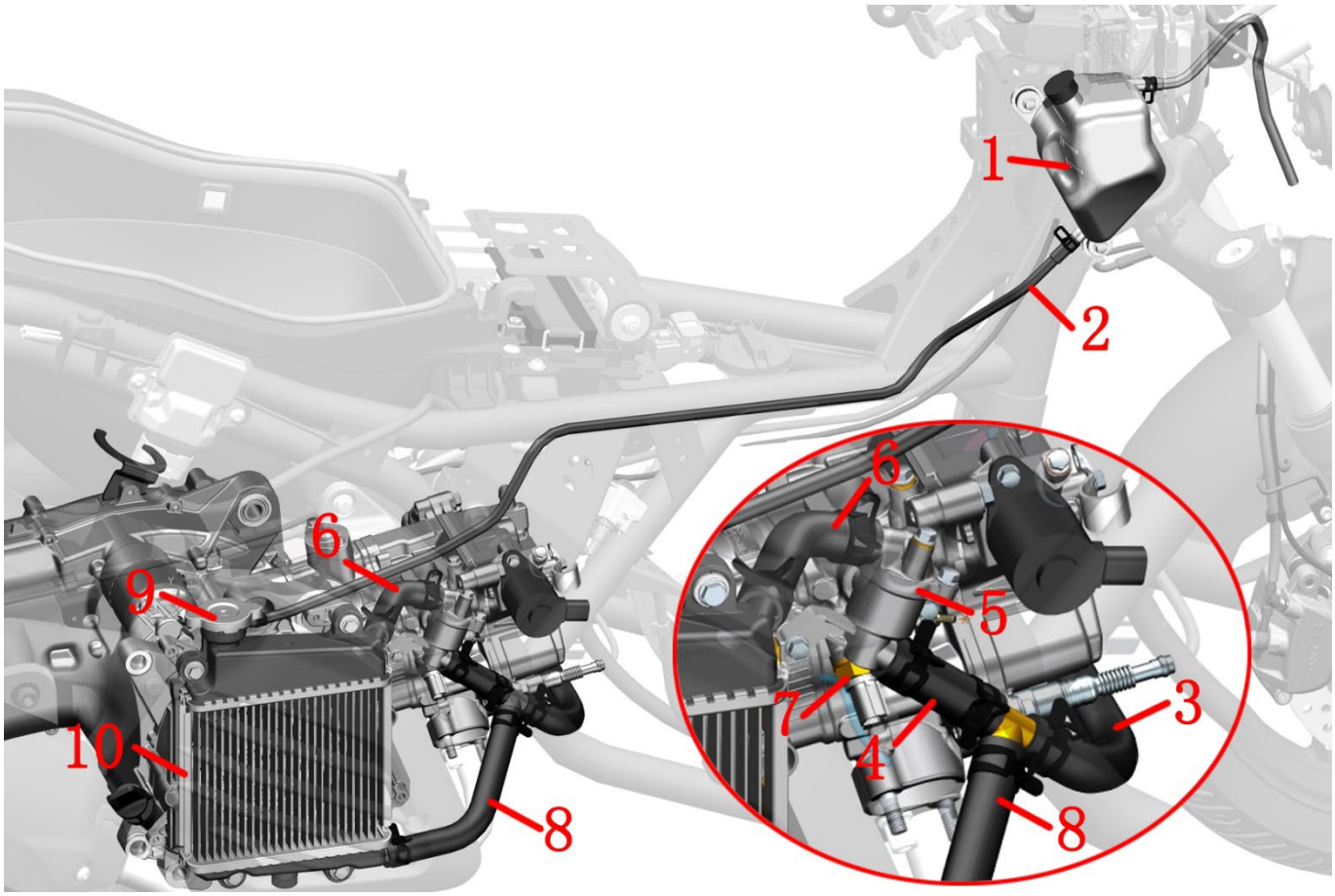

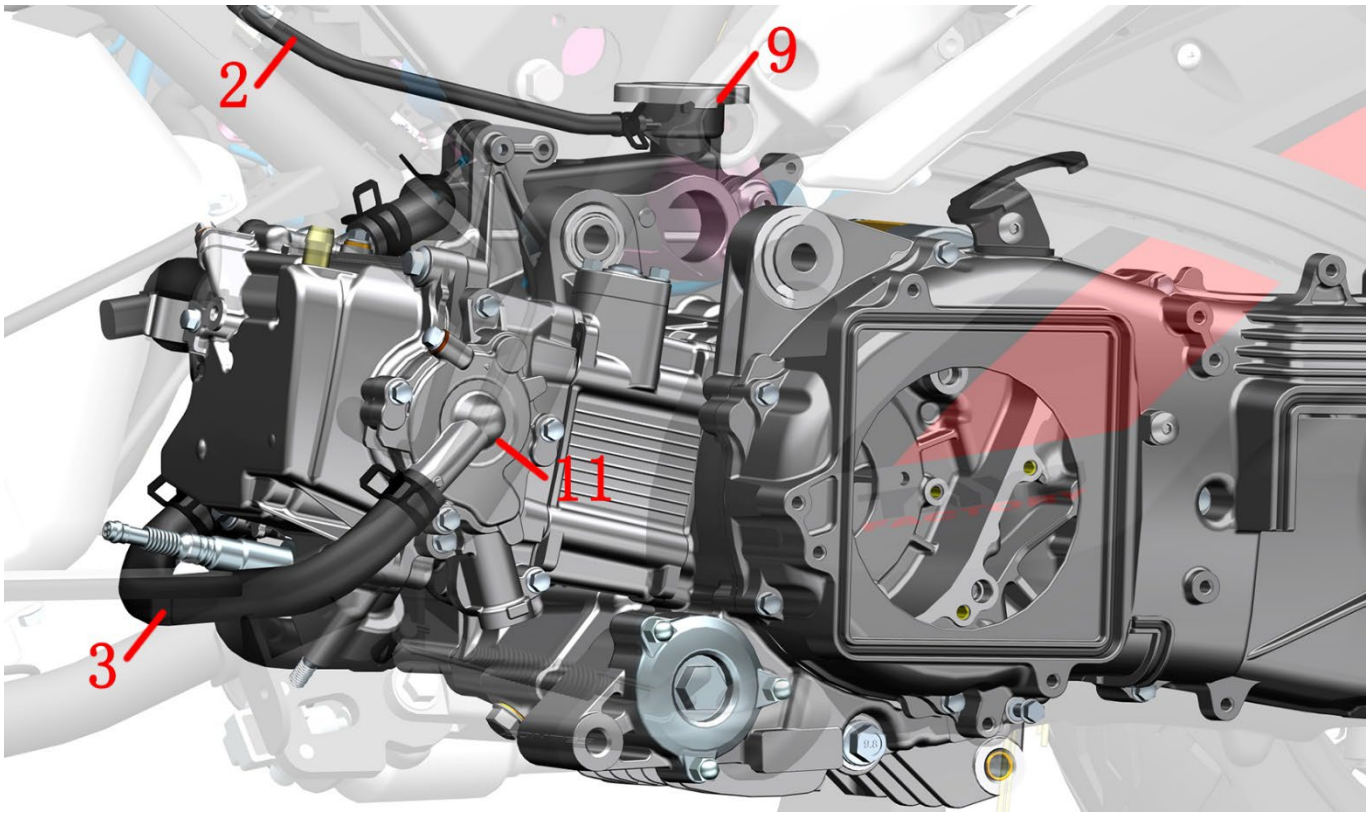

1-Secondary water tank 2-Secondary water tank link pipe 3-Engine inlet pipe 4- Thermostat outlet pipe 5- Thermostat 6- Water tank inlet pipe 7- Water and oil shared sensor 8- Water tank outlet pipe 9- Water tank cover 10- Radiator assembly 11- Water pump cover assembly

M350/368/250/368(ETC)

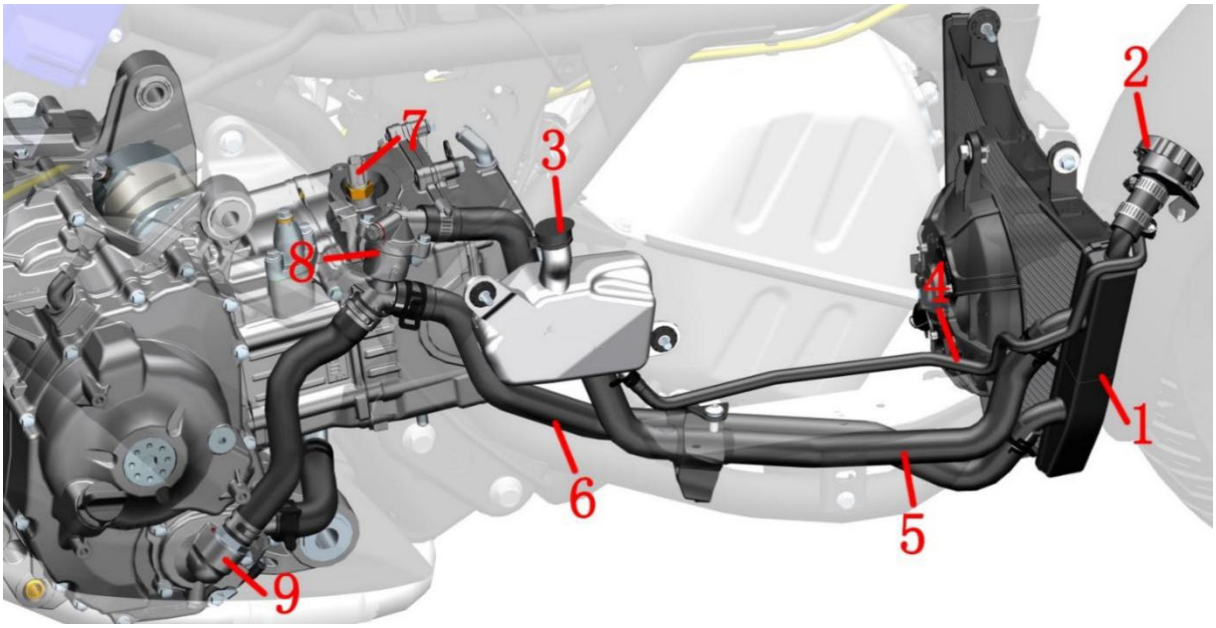

1- Main water tank 2- Water tank filling port 3- Secondary water tank 4- Auxiliary water tank is connected with water pipe 5- Main water tank inlet pipe 6- Main water tank outlet pipe 7- Water and oil shared sensor 8- Thermostat 9- Water pump cover assembly

M155

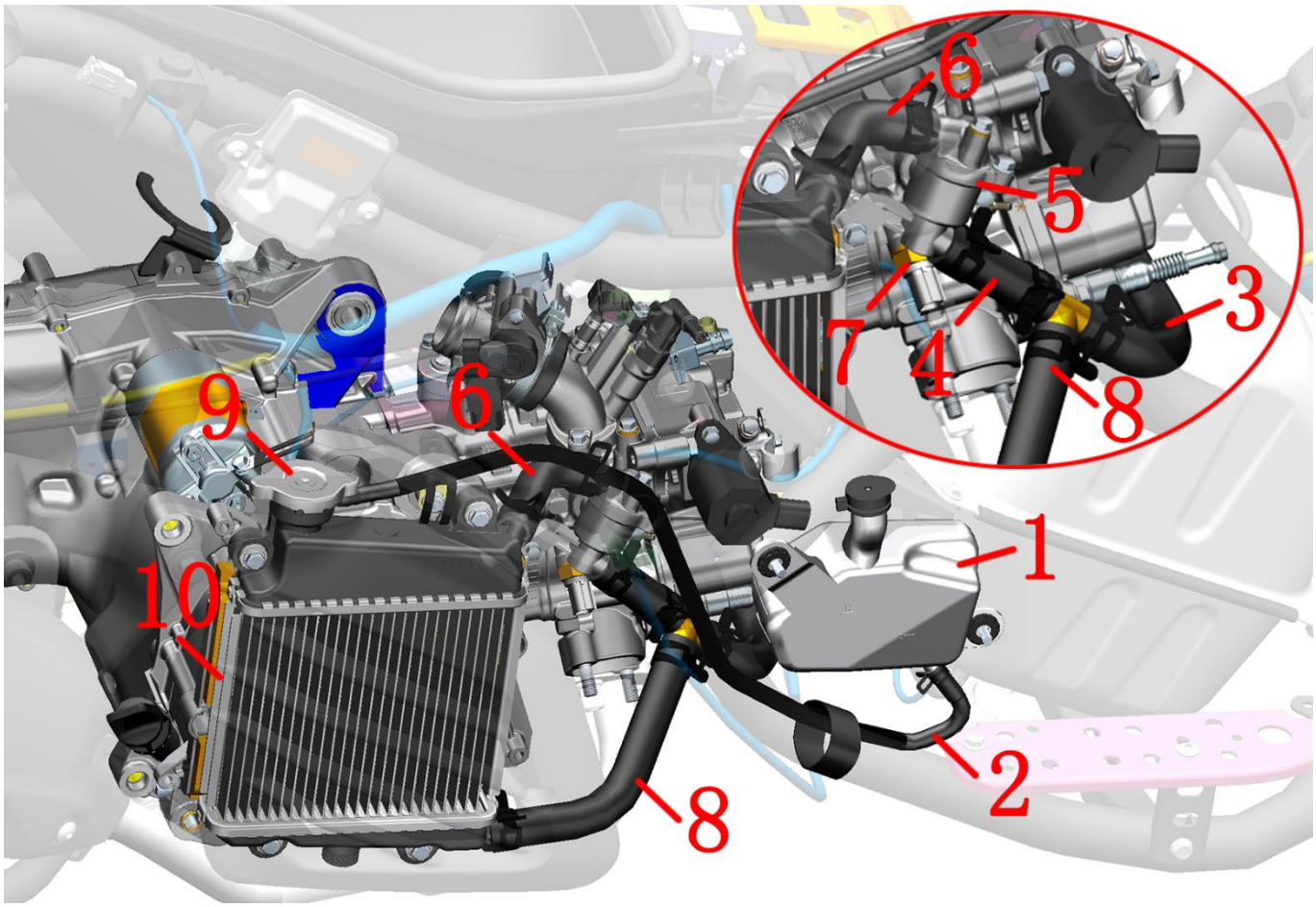

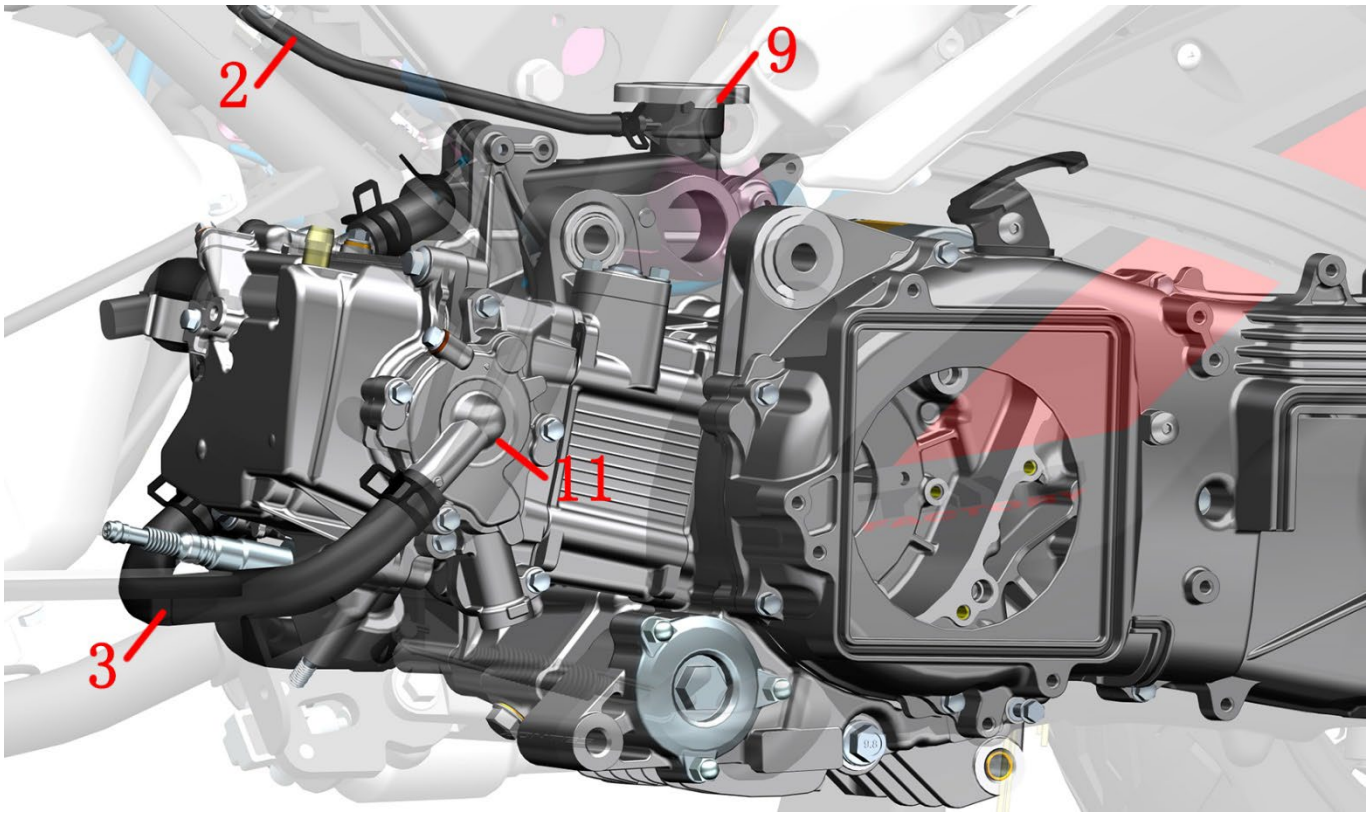

1- Secondary water tank 2- Auxiliary water tank is connected with water pipe 3- Engine inlet pipe 4- Thermostat outlet pipe
5- Thermostat 6- Main water tank inlet pipe 7- Water and oil shared sensor 8- Water tank outlet pipe
9-- Water tank filling port 10- Radiator assembly 11- Water pump cover assembly

Fuel pipe

Caution:

●A small amount of fuel will flow out when the high-pressure fuel pipe is removed.

●Work in an open and ventilated place. Smoking, mobile phone calls, etc. that may cause sparks are prohibited on the job site.

●The M125/350/368/250 steps are similar to the M310, taking the M310 as an example.

1. Check the fuel pipe for leaks with the help of an endoscope with LED light



M310



M125/155



M350/368



The above picture shows the equipment with LED endoscope. The picture comes from the Internet and the copyright belongs to the author of the original picture. Do not use it for other purposes.

2. Replace high pressure oil pipe

The M125/350/368/250 steps are similar to the M310, taking the M310 as an example.

a. Refer to steps a to j of "Remove stepping motor and clean up carbon deposits" in the throttle valve body, first remove the cushion and storage box components, and remove them as shown in the figure below.

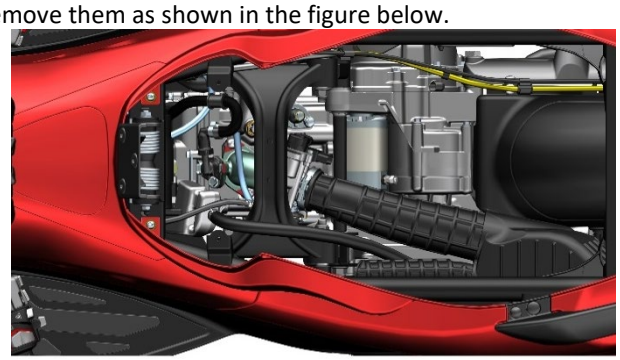

b. Remove a total of 4 pcs swell nails indicated by the arrow. For instructions on disassembly and assembly of swell nails, please refer to the pre-service instructions in this chapter. Use 4# inner hexagon to remove the M6×14 bolts.

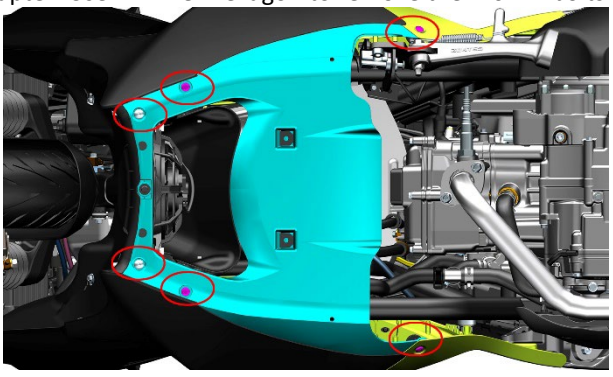

c. Press the blue part inward at the junction of green and blue as shown in the figure; pull the red and green parts outward. Then apply force from the rear wheel to the front wheel along the junction of the red and blue parts, push the

red part outwards, and force the blue parts inward to break apart.

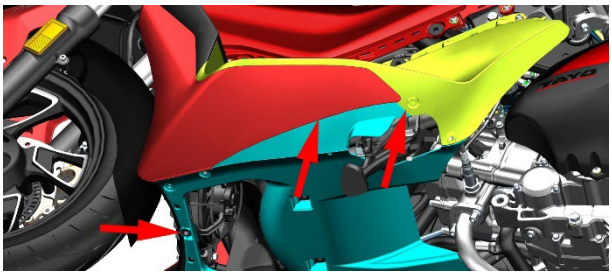

d. Pull down the surrounding bottom plate in the center of the front part (near the front wheel) with one hand, and pull down the surrounding bottom plate after pulling about 20mm (0.8 in) toward the rear wheel with the other hand. There is a bracket at the place shown in the small picture, so it cannot be pulled down directly.

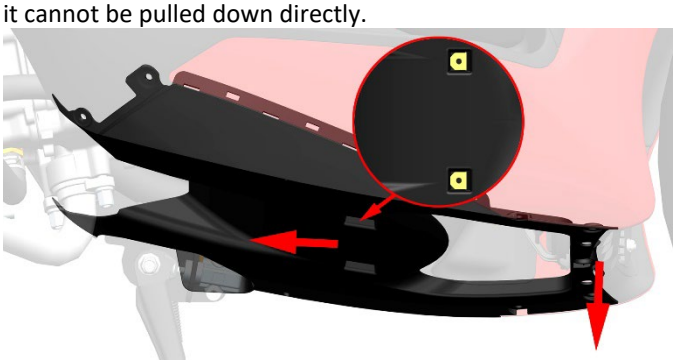

e. Unplug the fuel pump and start the engine at idle speed until the engine stops. Turn the engine stop switch to "", power off the vehicle and lock the vehicle. Early production vehicles did not contain high-pressure fuel pipe brackets①.

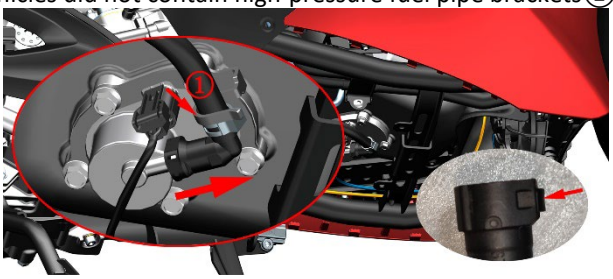

f. Pull out the high-pressure oil pipe from the bracket at the cylinder head.

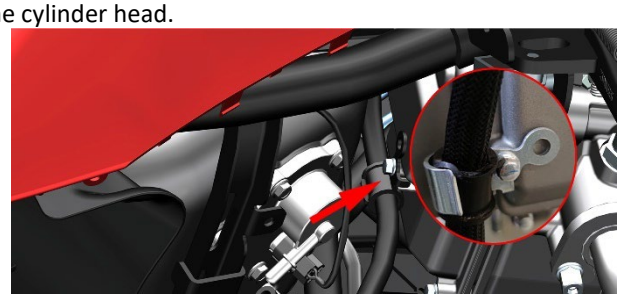

g. Pull out the high-pressure oil pipe in the direction of the arrow after pressing down the anti-dropping lock. Note that there are high-pressure fuel pipe brackets and cable ties at the intake manifold of vehicles produced after March 2021. The vehicles produced before are only lashed with cable ties.

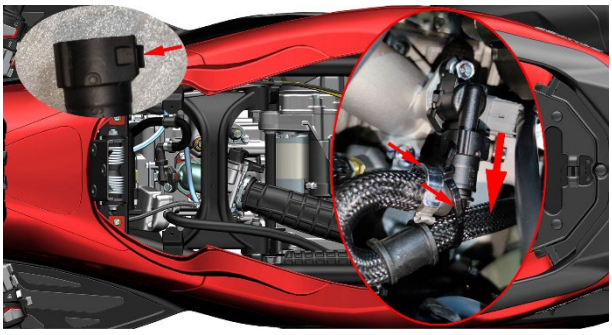

h. After replacing the new high-pressure oil pipe, refer to the disassembly steps to restore it.

3. Fuel pump

3.1 Use oil pressure gauge to measure fuel pressure

a. Refer to steps a to k of "Remove stepper motor and clean up carbon deposits" in the throttle valve body, first remove the seat cushion and storage box components, and remove them as shown in the figure below.

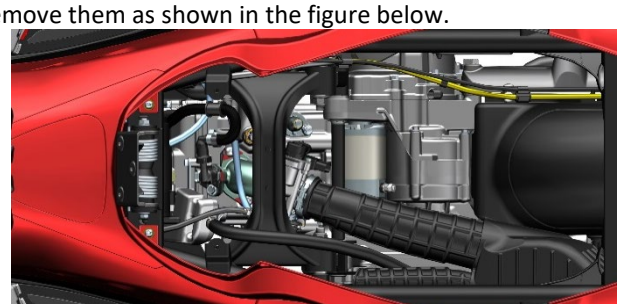

b. Unplug the fuel pump and start the engine to idle until the engine stops. Turn the engine stop switch to "", power off the vehicle and lock the vehicle. After putting on waterproof and oil-proof gloves, press the anti-trip lock and pull out the high-pressure oil pipe in the direction of the arrow.

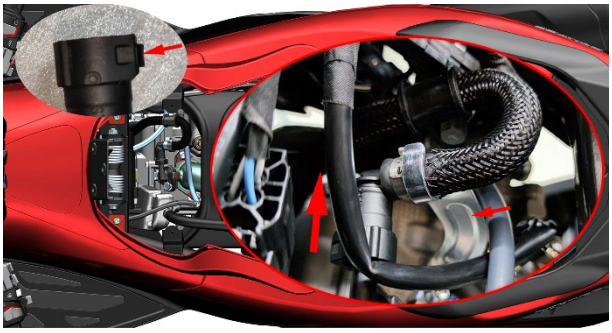

c. Connect the high-pressure oil pipe of the original car to the pressure gauge, and find another high-pressure oil pipe to connect the pressure gauge and the fuel injector.

Start the vehicle, let the engine run at idle speed, and measure the fuel pressure.

M125/310/155/250 the standard pressure is: 300±10kPa (3.06±0.1Kgf/cm2, 43.5±1.45 psi). Check valve performance: hold the pressure for 1 minute, the pressure should be ≥240kPa (2.45Kgf/cm2, 34.8 psi).

M350/368 the standard pressure is: 350±10kPa (3.57±0.1Kgf/cm2, 50.75±1.45 psi). Check valve performance: hold the pressure for 1 minute, the pressure should be ≥300kPa (3.06Kgf/cm2, 43.5 psi).

3.2 Simple test of fuel pump

If you do not have the special equipment conditions, you can do a simple test.

After the vehicle is in the stalled state, unlock the vehicle and turn on the stall switch. If you do not start the engine, you should be able to hear the sound of the fuel pump; or pinch the high-pressure fuel pipe from the bottom with your hands, and you should feel obvious pressure. Take care to avoid the muffler to prevent burns. If it is in the engine starting state, the whole vehicle shall be powered off for more than 10 seconds and then check according to the above operation.

4. Treatment of abnormal fuel pressure

If the fuel pressure is higher than the standard value, replace the fuel pump. If it is lower than the standard value, you need to inspect the following items:

a. Whether the fuel pipe is leaking;

b. Whether the fuel tank vent pipe is blocked or bent excessively;

c. Whether the fuel pump filter is blocked;

d. Whether the fuel pump is faulty;

e. Whether the fuel is insufficient.

WARNING

●When pulling out the high-level oil pipe, be sure to pull it toward the axis, and do not press or push or pull The protruding part of the fuel pump and nozzle holder.

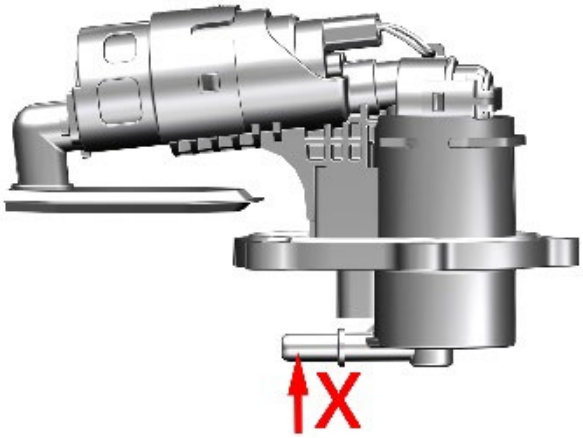

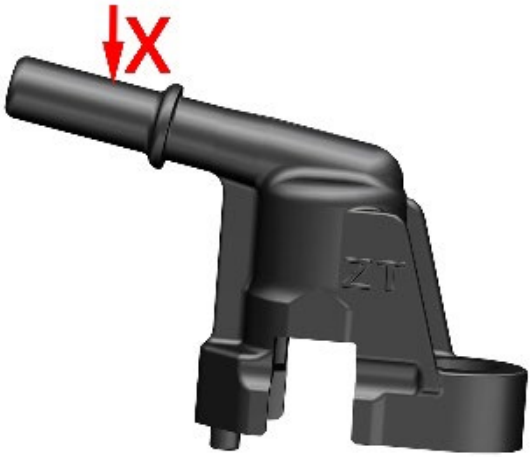

●It is forbidden to smoke, dial mobile phones and other actions that may cause a fire at the demolition site.

●The fuel pump is a precision component that needs to be assembled in a dust-free workshop and requires strict testing, so it is forbidden to disassemble it by yourself.

CAUTION

●The EFI system needs to be reset after reinstalling the battery. For specific operations, see the precautions in the driver's manual or the throttle valve body chapter of this manual.

Braking System

Caution:

●For the layout of the brake hose on the vehicle, please refer to the brake system accessories distribution diagram in the "Vehicle Information" chapter of this manual.

Caution:

In order to facilitate after-sales tracking, those who need to purchase brake hoses, disc brake calipers, disc brake main pumps, and hydraulic control units must be reviewed by our company before they can be purchased. Domestic customers can fill in the frame code and engine on the official website before purchasing. Foreign customers need to contact the corresponding salesperson and fill in the corresponding form before purchasing. The specific process can be found by the salesperson.

M310 Braking system component diagram:



M125 Braking system component diagram:

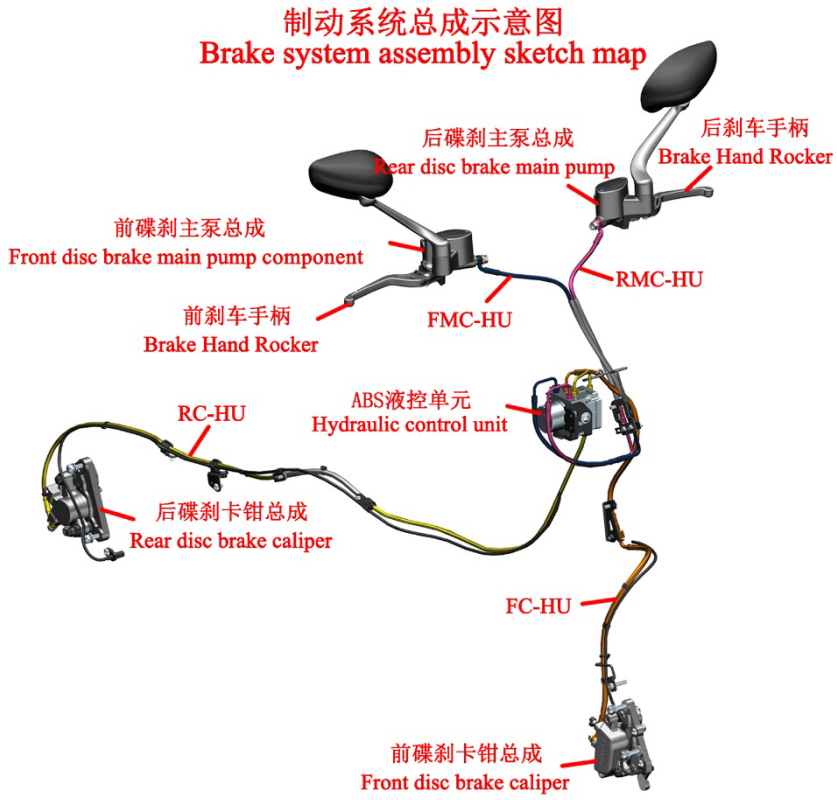

M350 Braking system component diagram:



M125 (2024) Braking system component diagram:

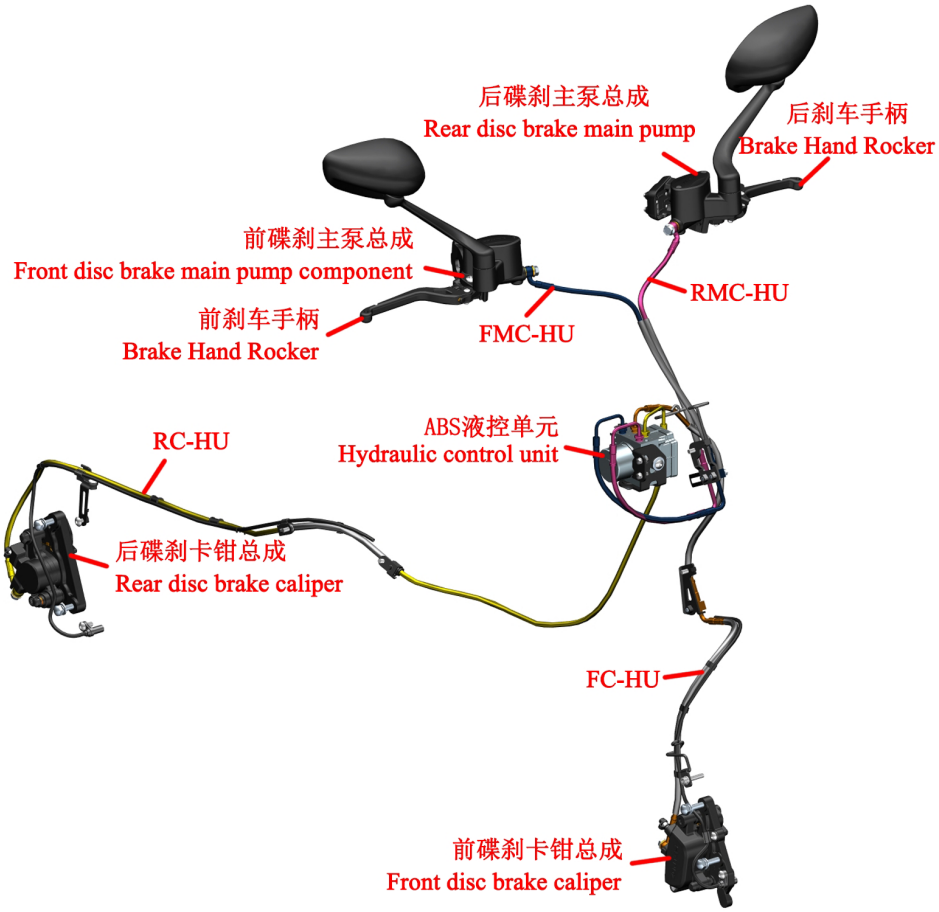

M155 Braking system component diagram:



M368 Braking system component diagram:

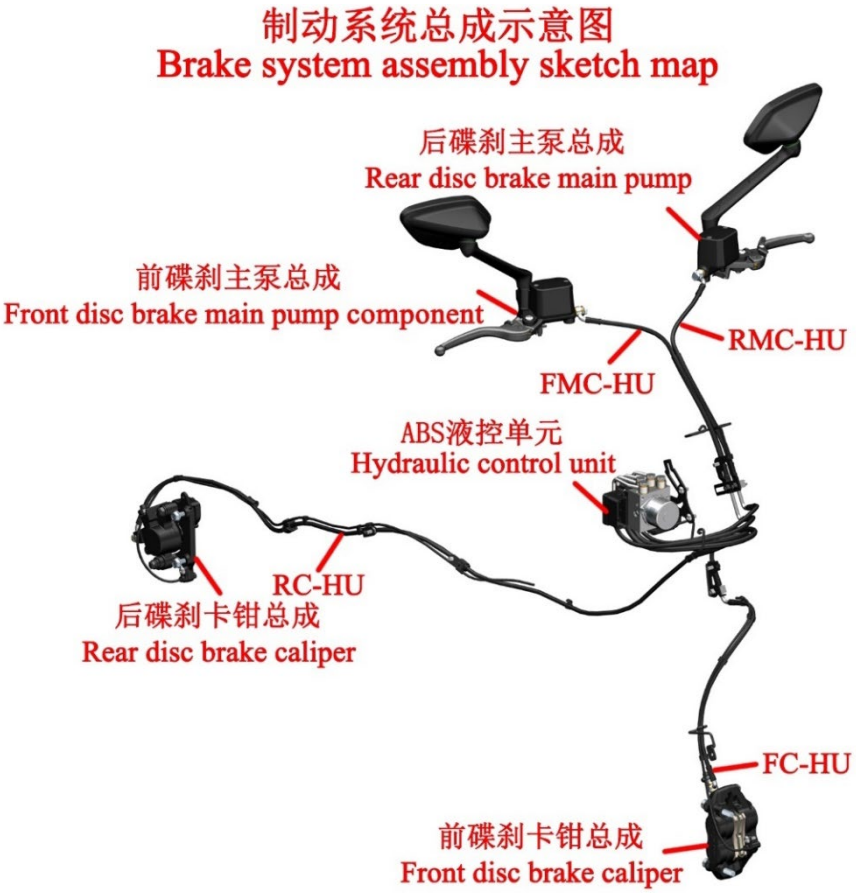

M150 Braking system component diagram(without ABS):



M250 Braking system component diagram:



M368(ETC) Braking system component diagram:

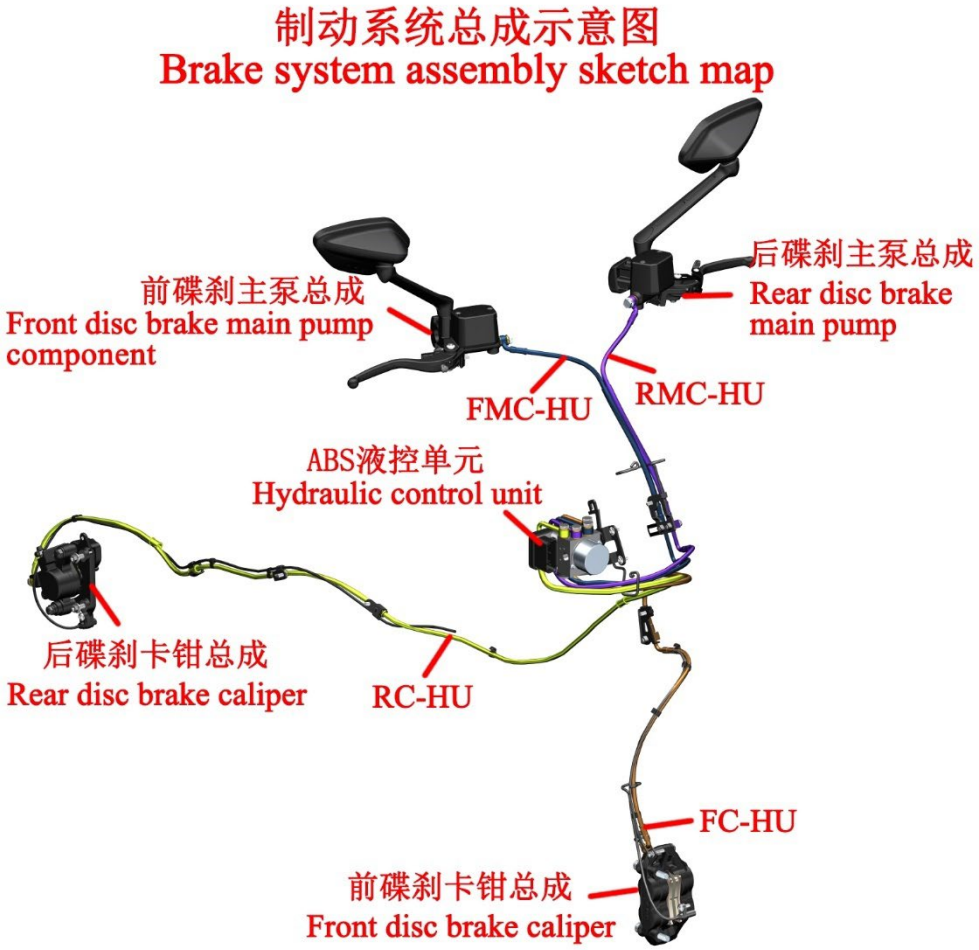

Caution:

●This inspection should be completed by a qualified maintenance organization.

●Regularly check whether the brake fluid level is at 3/4 of the observation window.

●If you accidentally swallow the brake fluid, you should contact the poison control center or hospital immediately; if you accidentally get the brake fluid into your eyes, rinse with water and seek medical attention immediately.

●Brake fluid must be kept away from children and pets.

●It is strictly forbidden to directly flush the main pump with high-pressure water.

1. Check the brake components

a. Check whether the liquid level of the front disc brake main pump and the rear disc brake main pump are above the "LOWER" line. Check whether there is brake fluid leakage at the oil pipe joints. Observe the color of the brake fluid. Normally, it should be light yellow. If the color becomes dark, it is recommended to replace the brake fluid.



b. Park the vehicle on a flat ground or a lifting platform, and lower the main support. Check whether there is brake fluid leakage at the oil pipe joints of the main pump, ABS hydraulic control unit and caliper. The endoscope with LED can be used to check the oil pipe joints of the ABS hydraulic control unit and the main pump, or to remove the corresponding cover for inspection.

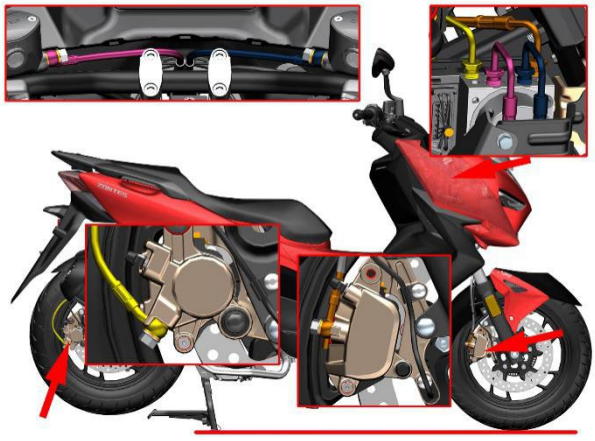

M310

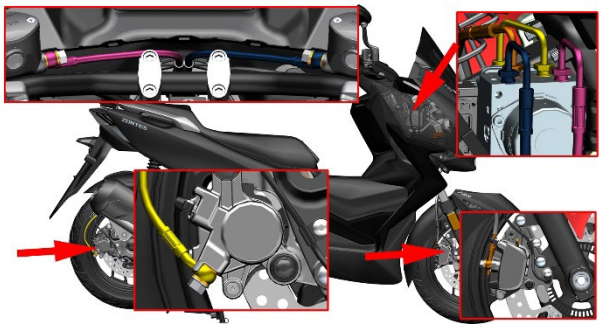

M125/M125 2024/155 version

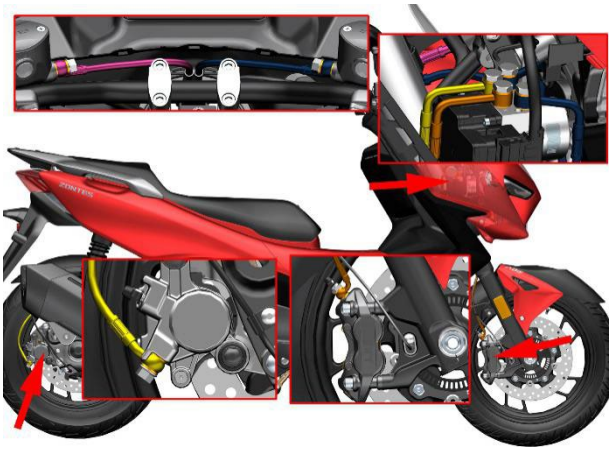

M350/368/250/368(ETC)

c. Measure the thickness of the front and rear brake discs. If it is less than 4.0mm (0.16 in), replace it. Hang the front wheel in the air and turn the front wheel by hand to observe whether there are obvious damages on the surface, such as pits, deep scratches, grooves, etc. Replace it if necessary. Feel with your hands whether there is a noticeable sound of grinding the brake disc when turning the front wheel. Observe from the front whether the brake disc swings when turning the front wheel; if there is any swing, please remove it according to the steps of dismantling the brake disc, and place it on a standard platform, use a dial indicator to measure the run out or use a feeler gauge to check the brake disc and The gap of the standard platform; such as> 0.08mm (0.003 in), you need to replace the new brake disc. Check the rear brake disc in the same way.

WARNING

●Before checking the brake disc operation, be sure to wait for the brake disc to cool down before proceeding.

●It is forbidden to reduce the temperature of the brake disc by spraying water, which may cause deformation of the brake disc and abnormal noise.

●If the brake disc anti-theft lock is used, please confirm whether it has been removed before driving the vehicle.

●Clean up the silt attached to the brake discs diligently.

d.Check the bolts fixing the caliper.

M125/310/M125 2024 version/155

Use 5# inner hexagon to remove bolt(1). Remove bolt(2) with a 14# sleeve. Standard torque of bolt(2): 24N.m (2.4 kgf.m, 18 lbf.ft). Do not operate the brake handle after removing the caliper.

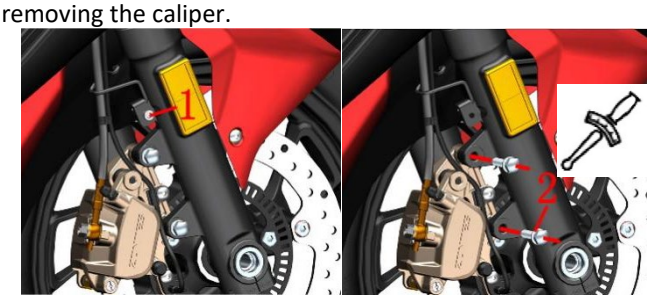

M350/368/250/368(ETC):

Remove two M10×1.5×60 bolts with 8# hex. The standard torque of the bolts is 45 ~ 50N.m(4.6 ~ 5. 1kgf.m, 33 ~ 37 lbf. ft). Do not operate the brake handle after removing the caliper.

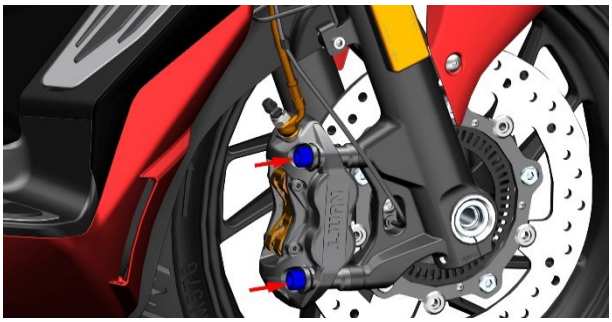

e. Pull out the front brake caliper assembly and check the wear of the brake pads. If worn or nearly worn to the limit position, new brake pads must be replaced in pairs.



f. Remove the wheel speed sensor ① from the wire clip ②. For M350/368, remove the bolt (2) using a 14# socket; for M368 (ETC), use a 10# socket. The standard torque for bolt (2): 24 N.m (2.4 kgf.m, 18 lbf.ft). Do not operate the brake handle after removing the caliper.

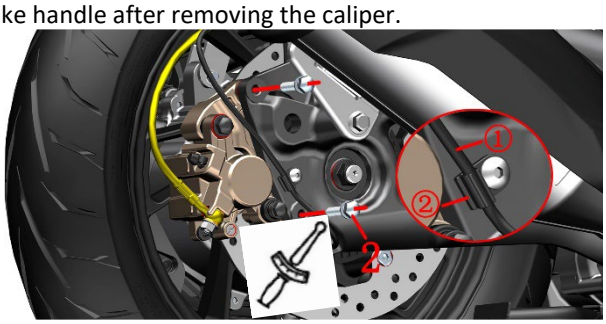

g. Pull out the rear caliper assembly and check the wear of the brake pads. If it is nearly worn or worn to the limit position, new brake pads must be replaced in pairs.



DANGER

●A qualified maintenance organization should check and maintain the brake pads on a regular basis.
●Do not drive immediately after replacing a new brake disc or brake pad. Be sure to hold and release the brake handle several times to allow the brake disc and brake pads to fully fit together to restore normal grip and to make the brake fluid circulate stably.
●The braking distance may be longer than the original braking distance after replacing the new brake disc or brake pad. It needs to be used for about 300 kilometers (186 mile). Good braking effect. Allow enough braking distance before running in sufficiently to ensure driving safety.

WARNING

●The brake pads must be replaced in pairs, only replacing one side will cause uneven braking.
●If the position of the brake pads is incorrect, it is forbidden to operate the brake handle. Otherwise, it will be difficult to reset the piston and may cause brake fluid leakage.

2. Check the front and rear brake switches

2.1 Check the brake switch

Hold the brake handles of the main pumps of the front and rear disc brakes respectively, and observe whether the rear brake lights are on. If it does not light, you need to investigate: whether the brake switch is faulty; whether the rear brake light is faulty; whether the fuse has blown; whether the circuit is open.

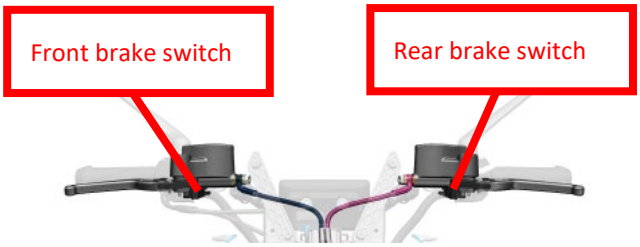

2.2 Replace the brake switch

Take the replacement of the rear brake switch as an example to explain.

a. Pull out the two plugs of the brake switch in the direction of the arrow without distinguishing the positive and negative poles.

b. Use a Phillips screwdriver to remove the bolt① to remove the rear brake switch(1).

c. Replace with a new switch, pay attention to align the switch boss and the limit hole of the brake main pump.

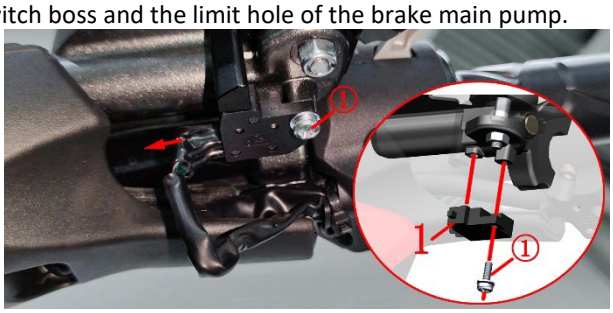

The replacement procedure of the front brake switch is the same as that of the rear brake switch. The throttle cable needs to be removed to facilitate the removal of the bolt①.



3. Lubricate the movable parts of the brake handle

3.1 Lubricate the front brake handle.

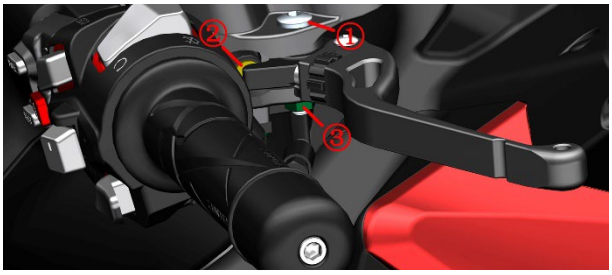

a. Use a 10# torx wrench to rotate counterclockwise to remove the nut③.

b. After grasping the handle, use a 5# inner hexagon counterclockwise rotation to remove the bolt①; remove the brake handle.

c. Wipe the handle pusher and the outer end of the piston with a clean non-woven cloth (the position shown in Figure②), and apply high vacuum silicone grease evenly.

d. Wipe clean the bolt①, and apply high vacuum silicone grease evenly.

e. Reinstall.

3.2 Lubricating the rear brake handle

Refer to the above method to lubricate the rear brake handle.



M125/310/155

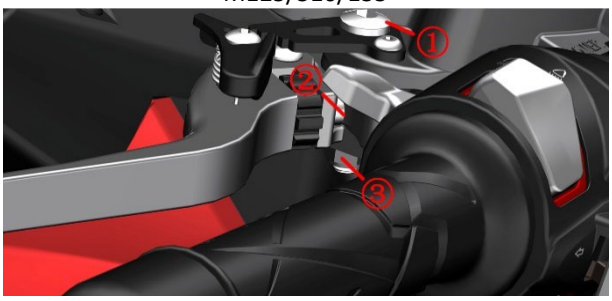

M350/368/250



M368（ETC）

3.3 Replacing the brake handle

Refer to the previous steps to remove the nut③ and bolt① to replace the new brake handle.

4. Adjust the brake handle

In order to adapt to more drivers driving this model, it is equipped with an adjustable brake handle.

M310/350/368/150/125/250

Take the right front brake handle as an example. Push the end of the handle to the end in the direction of the arrow, and adjust the wheel clockwise by hand. The extension of the push head will increase the distance between the handle and the rubber sleeve, and vice versa. The adjustment method of the rear brake handle on the left is opposite to that on the right.



M368(ETC)

Rotate the adjusting bolt in the direction of the arrow to increase the distance between the handle and the rubber sleeve; conversely, it will decrease.

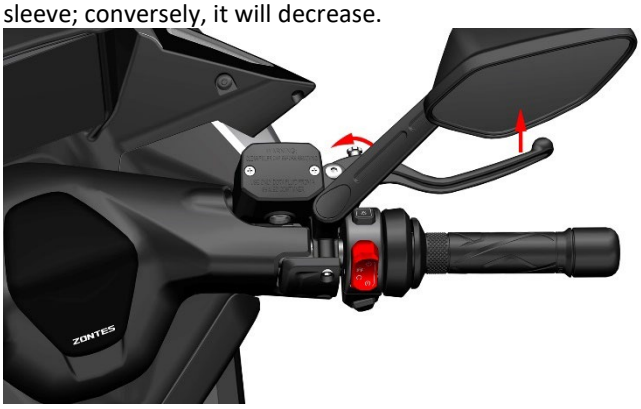

Front brake lever

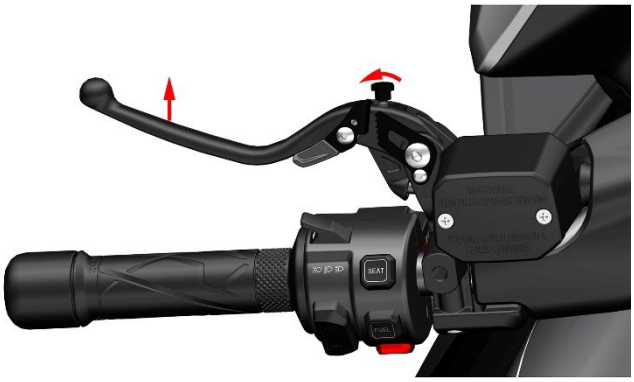

Rear brake lever

5. Replace the brake pads

DANGER

●A qualified maintenance organization should check and maintain the brake pads on a regular basis.

●Do not drive immediately after replacing the new brake pads. Be sure to hold and release the brake handle several times to allow the brake disc and brake pads to fully fit together to restore normal grip and to make the brake fluid circulate stably.

●The braking distance may be longer than the original braking distance after replacing the new brake pads. It needs to be used for about 300 kilometers (186 mile), and the best braking effect can be achieved after the brake disc and the brake pads are fully run-in. . Allow enough braking distance before running in sufficiently to ensure driving safety.

WARNING

●The brake pads must be replaced in pairs, only replacing one side will cause uneven braking.

●The brake pads must be assembled correctly.
●Do not operate the brake handle after removing the brake pads.

5.1 Replace the front brake pads

M125/310/155

a. Use a flat-blade screwdriver to remove the nut①. Remove the pin shaft② with a 5# inner hexagon.

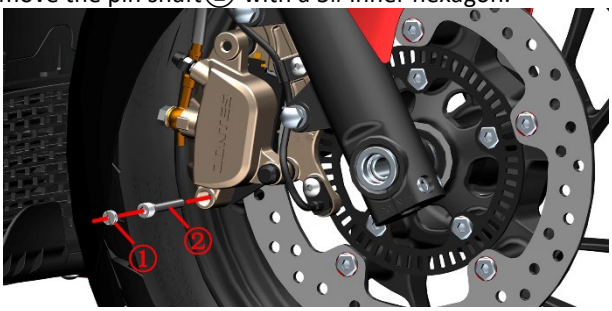

b. Remove the brake pads.

c. Push the piston to the end in the direction of the arrow with the help of a tool. If the resistance is high, you can refer to the method of adding brake fluid to the front brake main pump to remove the upper cover and then push. If the spring on the caliper falls off, it needs to be reinstalled in the direction shown in the figure.

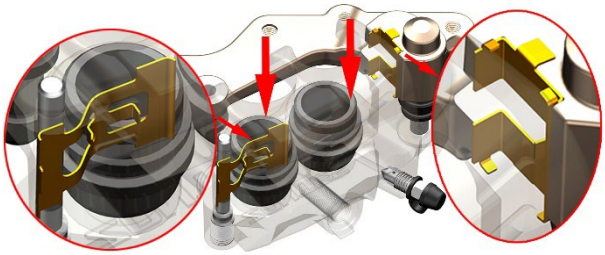

d. Take out the new brake pad and install it back. You need to hold the bottom of the brake pad (through hole end) with your hand. Be careful not to install it backwards, the side with 3 grooves faces the brake disc; the black metal back plate faces the caliper.





outside

inside

e. Observe from both sides whether the upper part of the brake pad has hit the shrapnel, otherwise the position needs to be readjusted.



f. After confirming that the upper part of the brake pad is assembled in place, insert the pin②, and lock it with a 5# inner hexagon.

g. Use a flat-blade screwdriver to put the nut① back and tighten it.

h. Repeatedly pinch and hold the brake handle to check whether the brake returns to normal hydraulic resistance.

M350/368/250/368(ETC)

a.Use needle-nose pliers to clamp and pull out the spring, and remove the two springs.

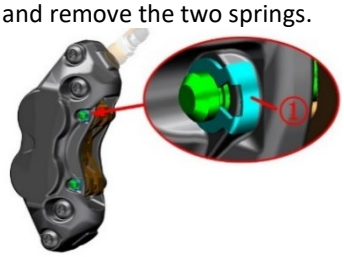

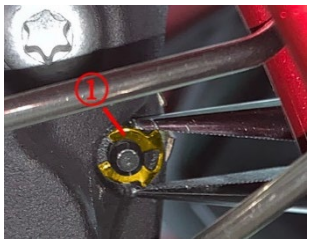

b. Use a T25 hexagonal box wrench to remove the upper pin ② and then the lower pin.

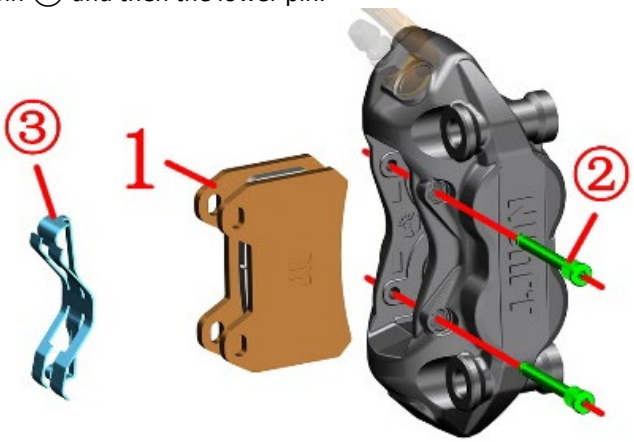

c. Remove the spring plate ③ and the brake plate (1).

d. Clean the dust and other foreign matters on the outer edge of the piston and the pin shaft.

e. Use a cross screwdriver to remove the bolt ④ on the front disc brake main pump assembly, and remove the upper cover ⑤, cover plate ⑥, and sealing gasket ⑦.

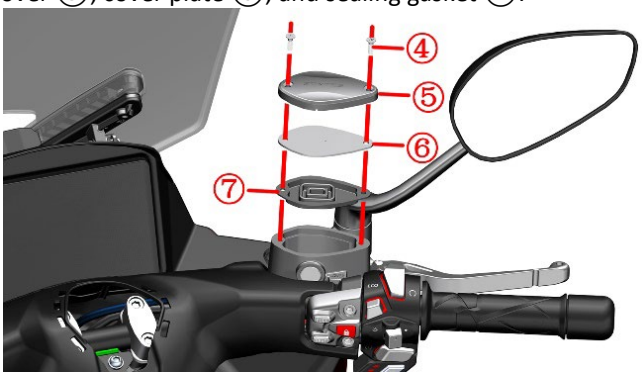

f.Push the piston to the bottom in the direction of the arrow.



g. Restore the front disc brake main pump assembly and make sure it is correctly assembled.

h. Install the two brake pads (1) back into the caliper, and install the spring plate③between the two brake pads. During assembly, the arrow in the spring piece shall be pointing upwards.

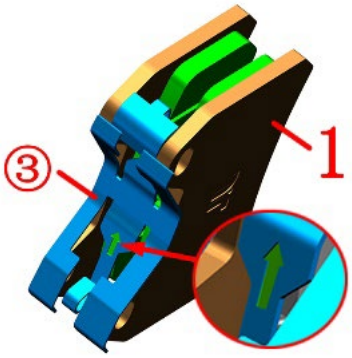

Press the disc body at the position indicated by arrow ⑨ inwards in the direction of the arrow, and fix the brake disc (1) with the pin ② inserted into the hole. Tighten the pin shaft ② with a T25 hexagonal box wrench.



j. Press the disc body at the point indicated by arrow ⑧ inwards in the direction of the arrow, and fix the brake disc (1) with the pin ② inserted into the hole. Tighten the pin shaft ② with a T25 hexagonal box wrench.

k. Install the two circlips ① back onto the pin shaft. The buckle is assembled in place after it makes a noise. When assembling the circlip, the flanging shall be outward. If the circlip is deformed, it can be corrected with a hammer with appropriate force.

l. Hold the brake handle repeatedly until the braking force is recovered.

5.2 Replace the rear brake pads

a. Use a flat-blade screwdriver to remove the nut①. Remove the pin shaft② with a 5# inner hexagon.

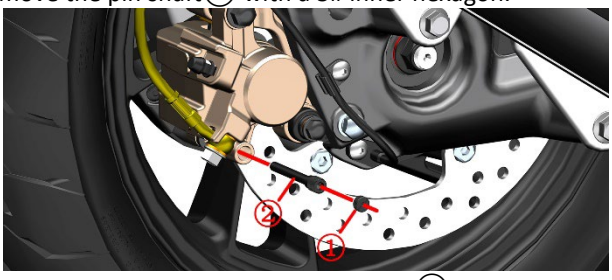

b. Use a 12# sleeve to remove the bolt③, turn the caliper assembly clockwise around the bolt④, and remove the brake pad. Note that the bolt④ does not need to be disassembled.

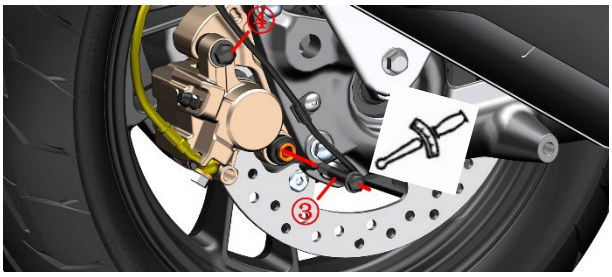

c. Push the piston to the end in the direction of the arrow with the help of a tool. If the resistance is high, you can refer to the method of adding brake fluid to the front brake main pump to remove the upper cover and then push. If the spring on the caliper falls off, it needs to be reinstalled in the direction shown in the figure.

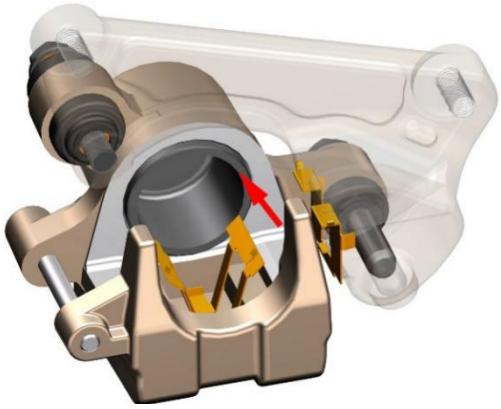

d. Grasp the outer brake pad with your left hand and insert the pin② with your right hand, being careful not to insert it to the end. Install the inner brake pad in place, then insert the pin to the end and use the 5# inner hexagonal lock pin②. Be careful not to install it backwards, the grooved side faces the brake disc; the black metal back plate faces the caliper.





e. After adjusting the position of the brake pad, reinstall the bolt③ and lock it with a 12# sleeve. Standard torque: 24N.m (2.4 kgf.m, 18 lbf.ft).

f. Use a flat-blade screwdriver to put back the nut① and tighten it.

g. Repeatedly pinch and hold the brake handle to check whether the brake returns to normal hydraulic resistance.

5.3 Abnormal sound of brake pads

The main reasons for the abnormal noise of the brake pads are as follows:

a. The brake pad is worn to the limit. If it is a new brake pad, check whether there is any foreign matter caught between the brake disc and the brake pad. It can return to normal after replacing new brake pads or cleaning foreign objects.

b. Use non-original brake pads with too high hardness and replace them with original ones.

c. The brake disc bolts are loose, and the tightening bolts can be restored to normal.

d. Braking system failure, such as the caliper sliding shaft is not reset due to rust; the brake pads and spring pads are not installed correctly. Derust or re-assemble correctly.

e. The brake disc is out of tolerance, and it can be restored to normal by replacing the new brake disc.

6. Replace the brake disc

DANGER

●The vehicle must be parked on a flat and stable ground or a lifting platform.
●After replacing the brake discs, brake pads, or reassembling the front and rear wheels, the brake handle must be operated repeatedly until the brakes restore the braking effect.
●Contaminated disc brake discs and disc brake pads will reduce the braking effect. Please replace with new disc brake discs and clean the contaminated brake discs.

WARNING

●After disassembling the brake disc or rim assembly, please do not operate the brake handle.
●Check the new brake disc for run out ≤0.08mm (0.003 in) before assembling.

6.1 Replacing the front brake disc

The front brake disc can be removed by referring to the description of the steps for disassembling the front wheel assembly in the "Front Fork Assembly" of this manual.

6.2 Replacing the rear brake disc

●The M125/350/155/368/250/368(ETC) steps are similar to the M310, taking the M310 as an example.

a. Use 6# inner hexagon to tighten the exhaust port nut.

The models Ⅰ:



After holding the muffler assembly, then use a 14# sleeve to remove the bolts on the position of 3 of connecting the muffler and the rear rocker arm. Note that the muffler must be completely cooled before it can be operated.

The models Ⅱ:



After holding the muffler assembly, then use 8# inner hexagon soket to remove the bolts on the position of 2 of connecting the muffler and the rear rocker arm.

The models Ⅲ and 3550/155/125



After holding the muffler assembly, then use a 8# inner hexagon soket to remove the bolts on the position of 2 of connecting the muffler and the rear rocker arm, then remove 2pcs ϕ10.5×ϕ24×2 gasketes. Some of the vehicles earlier did not have gasketes.

b. Remove the rubber cover then one person pinches the rear brake handle, and one person uses 21# sleeve + impact wrench to remove the rear wheel M16×1.5 nut. Standard torque of nut: 125N.m (12.8 kgf.m, 92 lbf.ft).

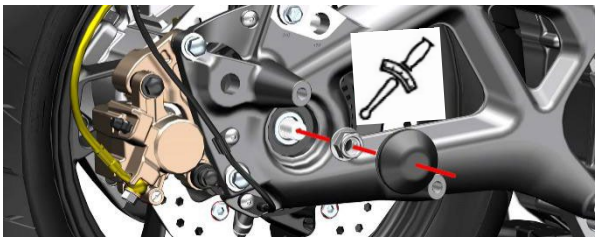

c. Use 4# hex socket to remove the M6×14 bolt(2) on the right middle of the rear inner mudguard, use 4# hex socket to remove the front M6×12 bolt(1) and the rear M6×16 bolt. Remove the two M6×12 bolts(1) and M6×16 bolt at the bottom of the rear rocker arm, and remove the wheel speed sensor. Pull out the staples on the position indicated by the arrow and remove the decorative cover of the engine right cover.

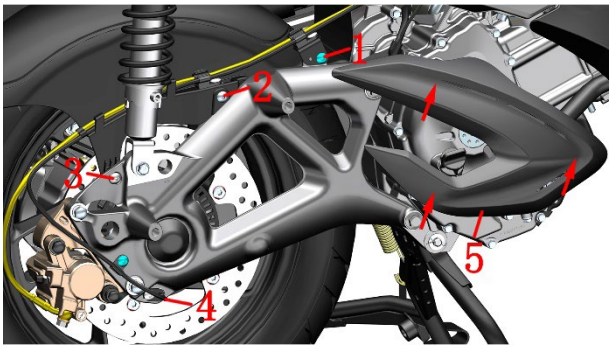

d. In the gap between the left air filter and the rear inner mud board, hold the air filter housing with one hand, and press the rear inner mud board at the position 2 indicated by the arrows with the other hand. Separate the rear inner mud plate from the staples on the air filter and lift it up to facilitate subsequent removal of the rear rocker arm.



e. Use a 14# sleeve to remove the 2 bolts that fix the rear brake caliper, and tie the caliper and the wheel speed sensor cable. Pay attention to let the calipers sag naturally without affecting the rocker arm after disassembly. Use a 14# sleeve to loosen the 2 bolts. Then use a 12# sleeve to remove the bolt that fixes the rear shock absorber, and then remove the rear shock absorber and tie it. Grasp the rear rocker arm firmly with one hand, and remove the 2 bolts with the other hand. Pull the rear rocker arm outwards and remove the rear rocker arm, paying attention not to omit the shaft sleeve when reinstalling. The standard torque for bolts (6) M150/310/350 is 45 N.m (4.6 kgf.m, 33 lbf.ft), the torque for M368/M368 (ETC) is 55 N.m (5.6 kgf.m, 41 lbf.ft); the torque for bolts (7) and (8) is 24 N.m (2.4 kgf.m, 18 lbf.ft).

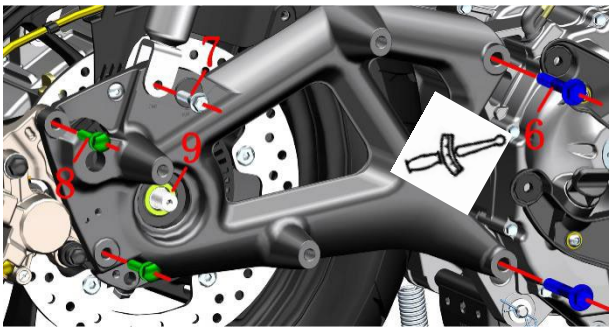

f. Remove the shaft sleeve and take off the rear wheel assembly.

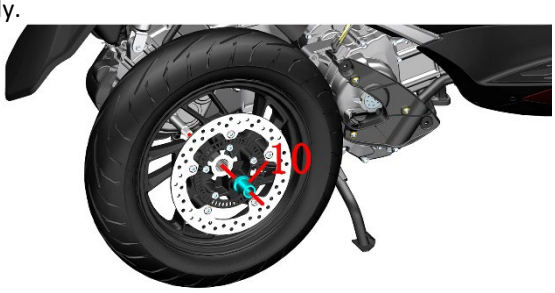

g. Replacing the rear brake disc

M310:Remove bolts with 6# inner hexagon soket, and then take off the brake disc. If you need to replace the ABS gear ring, remove the bolt and then replace it. Bolt standard torque: 25N.m (2.6 kgf.m, 18 lbf.ft).



M125/350/155/250:



M368/368(ETC) Remove bolts with T45 soket,and then take off the brake disc assembly.

h. Refer to the order of disassembly to restore. Note that bolts with torque requirements need to be calibrated according to standard values.

Brake hose

Caution:

●This inspection should be completed by a qualified maintenance organization.

●Check the hhose according to the maintenance schedule.

Refer to steps 1 and 2 of checking brake fittings in the brake system, you can use the endoscope with LED to easily check the oil pipe joints of the ABS hydraulic control unit and the main pump, or remove the corresponding cover for inspection.

Brake fluid

Caution:

●This inspection should be completed by a qualified maintenance organization.

●It is strictly forbidden to directly flush the main pump with high-pressure water.

●After disassembly, make sure that all parts are installed correctly.

●It is strictly forbidden to mix in water, dust, impurities and silicic acid or petroleum-based liquids, otherwise it will cause serious damage to the brake system.

●This vehicle uses DOT 4 brake fluid, and it is forbidden to mix it with other brake fluids.

●Wear protective gloves/protective clothing/protective goggles/protective masks.

●Brake fluid must be used in time after opening, seal and moisture-proof measures must be taken when storing; it is recommended not to exceed 1 month. Inferior or damp brake fluid will cause adverse effects on the brake system, and may cause brake failure when the impact is severe.

●The brake fluid should be prevented from dripping on the paint surface of the cover or the surface of the parts. If it is accidentally splashed, it should be rinsed with water immediately.

⚠ DANGER

●If you accidentally swallow the brake fluid, you should contact the poison control center or hospital immediately; if you accidentally get the brake fluid into your eyes, rinse with water and seek medical attention immediately.

●Brake fluid must be kept away from children and pets.

●The vehicle must be parked on a flat and stable ground or a lifting platform.

1. Add brake fluid to the main pumps of the front and rear disc brakes

The M125/350/155/368/250/368(ETC) steps are similar to the M310, taking the M310 as an example.

a. Adding brake fluid to the main pump of a disc brake is taken as an example for description. The steps for refilling the rear brake main pump are the same.

b. Place the vehicle horizontally.

c. Wrap around the main pump with oil-resistant plastic film to prevent the brake fluid from dripping onto the surface of the parts and damaging the paint layer.



d. After wearing waterproof gloves, use a Phillips screwdriver to remove the bolt①, and remove the upper cover②, the cover③, and the sealing rubber gasket④.

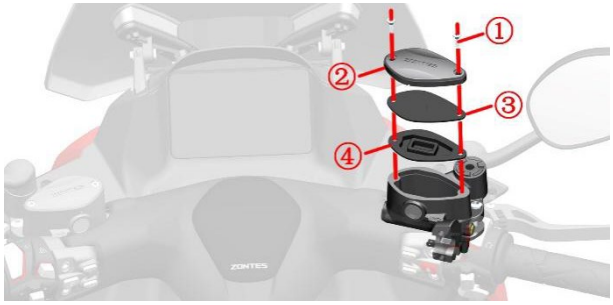

e. Use the brake fluid water content tester to measure the water content, if it is more than 2%, all brake fluid needs to be replaced; if it is less than or equal to 2%, add newly opened DOT 4 brake fluid to the transparent observation window of the front disc brake main pump 3/4 places. It is recommended that the water content should be less than 1.5%.Total 0.215L（0.23 US qt,0.19 lmp qt,0.06 US gal ,0.05 lmp gal） TOTAL HBF 4 (DOT 4) brake fluid is added to this vehicle from the factory.



The above picture shows the brake fluid water content tester. The picture comes from the Internet and the copyright belongs to the author of the original picture. Do not use it for other purposes.

f. Reassembly can only be done after the foreign objects have been cleaned up.

2. Replace the brake fluid

Refer to the steps of adding brake fluid. If the measured water content is greater than 2%, the brake fluid needs to be replaced. M310 this inspection should be done every 5000 kilometers (3107 mile) or every 15 months. M125/350/155/250/368 this inspection should be done every 4000 kilometers (3107 mile) or every 15 months , M368(ETC) is every 6000km(3728mile). It is recommended to replace the brake fluid every 2 years. If the brake fluid is not replaced for a long time, flocs will form to block the oil pipe, the oil hole of the main pump of the disc brake or the piston will become stuck, which will cause the braking effect to deteriorate or fail, which will affect driving safety.

2.1 Replace the front brake brake fluid.

The M125/350/155/368/250/M368(ETC) steps are similar to the M310, taking the M310 as an example.

a. Wrap around the front brake main pump with oil-resistant plastic film, as shown in the previous section.

b. Pull out the rubber cap of the vent nozzle①, and put on 8# torx wrench. Use a 6mm (0.23 in) hose to fit the vent②, being careful not to remove the torx wrench.

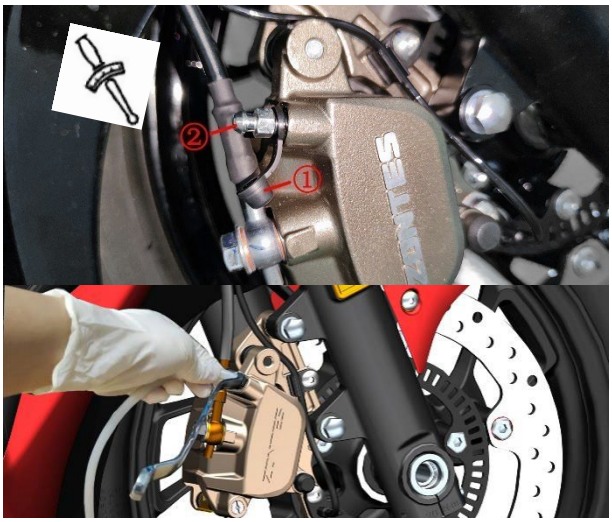

c. Put the other end of the hose into the oil pot.

d. Remove the upper cover of the front brake main pump referring to the previous step of adding brake fluid.

e. Rotate the 8# torx wrench with the right hand counterclockwise to loosen the air nozzle, and with the left hand, slowly and uniformly squeeze the front brake handle to the end and keep it still. Lock the vent nozzle clockwise and slowly loosen the handle. Pay close attention to the liquid level of the front brake main pump. When it is too low, add it in time to prevent air bubbles from entering the brake hose. Repeat the previous steps until the transparent and clean light yellow brake fluid comes out.



f. Observe whether the liquid level of the main pump is at 3/4 of the transparent inspection, if it is not necessary to add or withdraw or discharge with a syringe.

g. After the brake fluid is replaced, unplug the 6mm (0.23 in) hose; use a torque wrench to tighten the bleed nozzle to the standard torque: 10N.m (1 kgf.m, 7 lbf.ft). Then put the rubber cap on the air nozzle.

h. Reinstall the upper cover of the main pump.

i. Repeatedly pinch and hold the brake handle to check whether the brake returns to normal hydraulic resistance.

WARNING

●The discharged brake fluid needs to be properly disposed of, and it is forbidden to continue to use it. It is forbidden to dump at will to pollute the environment; or put it at will, etc. It should be handed over to a qualified recycling unit for proper disposal.

●The steps of discharging brake fluid must be strictly performed without confusion; avoid air bubbles from entering the brake pipeline.

●When pinching the brake handle, it must be slow and uniform to avoid air bubbles from entering the brake pipeline.

●The vent nozzle must be locked in place before the brake handle can be released. Half-locking is forbidden; and do not use excessive force.

2.2 Replace the rear brake fluid

Refer to the steps for replacing the front brake brake fluid to replace the rear one.

3. Brake system exhaust

If the hand feel soft when the brake handle is squeezed and the braking performance is significantly reduced, first check whether the brake fluid level of the main pump is lower than the "LOW" line and whether the brake system is leaking. If the problem still exists after excluding the above two items, you can try the exhaust operation. The exhaust operation is similar to the previous operation of replacing the brake fluid. When replacing the brake fluid, a clean and transparent light yellow brake fluid must flow steadily, while the exhaust operation will flow out foamy brake fluid.

After exhausting, check whether the brake fluid level of the main pump meets the standard.

WARNING

●The discharged brake fluid needs to be properly disposed of, and it is forbidden to continue to use it. It is forbidden to dump at will to pollute the environment; or put it at will, etc. It should be handed over to a qualified recycling unit for proper disposal.

● Pay close attention to the liquid level in the main pump during operation, and replenish it in time to prevent air from entering the brake hose.

Tire

DANGER

●Check the tire condition and tire pressure before driving.

●When the tire is worn to the limit or there are cracks or wounds on the surface, it should be replaced in time.

●Pay special attention to driving safety when using new tires. New tires that have not run in well may slip and cause the vehicle to lose control.

●Avoid sudden acceleration, sharp turns, emergency braking, etc. within 150 kilometers (93mile) after replacing the new tire.

●M310 the standard front wheel of this vehicle is 110/80-14, and the rear tire is 140/70-14. M125/155 the standard front wheel of this vehicle is 100/80-14, and the rear tire is 120/70-14. M350/368/250 the standard front wheel of this vehicle is 120/70-15, and the rear tire is 140/70-14. When replacing tires, you should replace standard tires. Use of non-standard tires may cause problems.

●It is not recommended to use external repair to repair the tire, the tire needs to be removed for internal repair. Temporary emergency can use external compensation, but the vehicle should be driven at a lower speed, and internal compensation should be made to the maintenance organization as soon as possible. If the sidewall is bumped, punctured, scratched, or if the tread is damaged and the hole is large, it should be replaced directly. Rebalance should be done after Tyre repair.

WARNING

●Check the tire pressure regularly. M310 the standard is 260kPa (2.7 kgf/cm2, 37.7 psi) under normal temperature conditions;M125/155 front tire is 220kPa(2.2 kgf/cm^2， 32 psi),rear tire is 270kPa (2.75 kgf/cm2, 39 psi); M350/368/250 the front tire standard is 240kPa (2.5 kgf/cm2, 35 psi) and the rear tire is 260kPa(2.7 kgf/cm2， 37.7 psi) under normal temperature conditions. The maximum tire pressure in the cold state shall not exceed 300 kPa (3.1 kgf/cm2, 44 psi).

●When the tire pressure is found to drop, check whether the tire has nails or small holes; whether there is a collision on the side of the rim that causes deformation or cracks.

●Be careful to avoid the position of the valve when removing the tire with the tyre raking machine. Pay attention to protect the contact part of the rim and the bead, if it is scratched, it may cause air leakage.

●The tire pressure is too high, which reduces the contact area with the ground. It is also more likely to cause a puncture in the summer. Too low will cause difficult steering, accelerate wear and increase engine load and increase fuel consumption.

●Frequent exposure to the sun can cause tire cracks and aging. It is recommended to park the vehicle in a dust-proof, sun-proof, and ventilated place; or cover it with a car jacket to protect the body parts and the tires better. If you do not drive for a long time, you should support the vehicle firmly and let the tires hang in the air to avoid deformation caused by long-term load on the ground contact.

●Because the tire self-refilling may block the air hole of the tire pressure monitoring sensor, causing difficulty in inflation or failure of the tire pressure monitoring, it should not be used.

1. Check the tires

a. Park the vehicle on a flat and stable ground or a lifting platform, and put down the main support.



b. Support the front wheel with suitable tools, let the front tire hang in the air, and then rotate the tire to carefully check for abnormalities, such as partial wear, studs, cracks, etc. Clean up the pebbles or other foreign objects embedded in the tread pattern. Check whether the tread and sidewall have worn to the mark. If they are close to or have worn to the mark, replace with a new tire of the same specification in time. Use a tire pressure gauge to measure the tire pressure when the tire is cold, and add or deflate to the standard pressure.





b. The height of the wear mark on the tread protrusion is 1.6mm (0.06 in). The triangle (△T.W.I.) mark on the sidewall indicates the location of the wear bar. If the wear reaches the mark point, it means that it has been worn to the limit. If you continue to drive, there will be a safety hazard. You must replace with new tires of the same specification.

c. The inspection of the rear tires is the same as that of the front tires and will not be repeated here.

2. Replace tires

a. Replace the front tire

The front wheel assembly can be removed by referring to the description of the steps for disassembling the front wheel assembly in the "Front Fork Assembly" of this manual. Use a tyre picker to remove the tire. When disassembling, pay attention to avoiding the valve position. Do not use a crowbar to pry the tire at the valve position to avoid damage to the tire pressure sensor. Before pressing the tire, install it according to the direction of rotation indicated by the sidewall, and aim the light point with the yellow mark at the position of the valve. After replacing a new tire or repairing a tire, the dynamic balance needs to be re-balanced to prevent the front wheel from shaking due to unbalance and affecting the driving experience



b. Replace the rear tire

Refer to the previous operation of replacing the rear brake disc to remove the rear wheel assembly. Other operations are similar to the replacement of the front tires, and will not be repeated here.

Steering mechanism

Caution:

●Regularly inspect the steering mechanism according to the requirements of the regular maintenance table.

●Park the vehicle on a flat and stable ground or a lifting platform, and put down the main support.

●Too small steering mechanism clearance will cause inflexible steering and accelerate bearing wear. When it is too large, it will cause driving jitter and abnormal noise when braking.

1. Check the steering mechanism

a. Support the front wheel with a suitable tool so that the front tire is hung in the air and then rotate the direction handle left and right to confirm whether the rotation is flexible and smooth; whether the cable and cable show signs of being pulled.

b. Keep the front wheel suspended, shake the front wheel assembly in multiple directions, to confirm whether the front fork assembly is axially strung or loosened in the radial direction.



2. Adjust the steering mechanism

M125/310/155

If the steering is not flexible or loose, the axial bearing clearance should be adjusted.

Refer to the steps to remove the faucet lock in the section "Replace the lower link plate" in the "Front Fork Assembly" of this manual, and remove the storage box. Remove the faucet lock.



b. For the convenience of explanation, other parts are hidden here. First use a 38-42 hook wrench with a thickness of 6mm (0.24 in) to loosen the adjusting nut (1a); move the lock washer(2) up and then loosen the adjusting nut (1b).

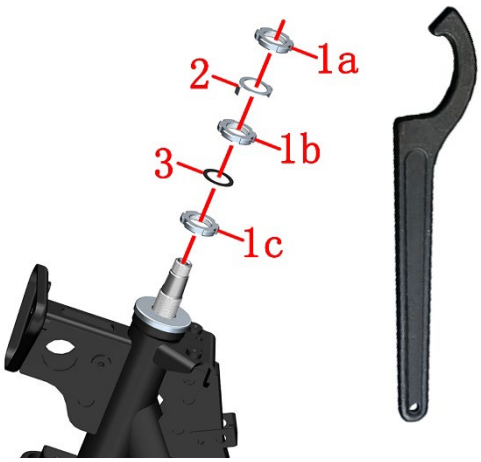

c. If the steering is heavy, loosen the adjusting nut (1c) counterclockwise. First screw it clockwise to 35N.m (3.6 kgf.m, 26 lbf.ft), then loosen 1/4 turn counterclockwise, and then screw it to M125/310/350 is: 15N.m (1.2 kgf.m, 11 lbf. ft),M125 2024 version is 13N.m(1.3 kgf.m,10 lbf.ft).

d. If thre is any looseness, screw it clockwise to 35N.m (3.6 kgf.m, 26 lbf.ft), then loosen it counterclockwise by 1/4 turn, and then screw it to M125/310/350 is: 15N.m (1.2 kgf.m, 11 lbf. ft),M125 2024 version/155 is 13N.m(1.3 kgf.m,10 lbf.ft).

e. After adjustment, confirm whether the steering is restored. If it returns to normal, turn the nut (1b) clockwise to touch the rubber pad (3) and align the lock washer (2) with the groove of the nut (1b) and (1c). M125/310/350 tighten the nut (1a) to 100N.m (10.2 kgf.m, 74 lbf.ft),M125 2024 version/155 is 80N.m (8.2 kgf.m, 59 lbf.ft).

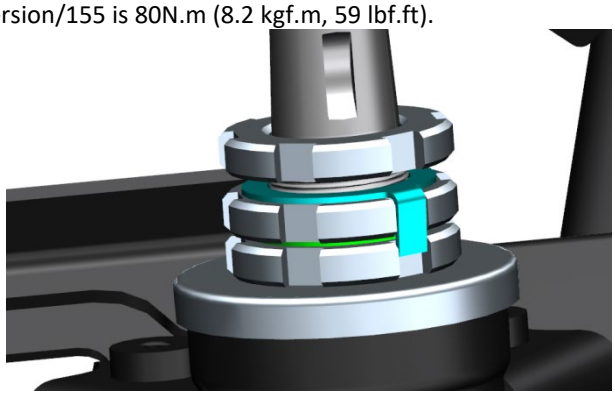

f. The front wheel is hung in the air to straighten the direction handle, and gently push and pull the direction handle by hand to feel whether the steering mechanism is smooth and free of jams. When the front fork assembly is slightly tilted to one side, it should be able to slowly deflect to the end under its own weight. If it is quickly to the end, it needs to be readjusted.

M350/368/250/M368(ETC)

a. Remove the direction handle cover and front panel before performing this operation. Remove to the extent shown.

After turning the direction left to the end, remove the nut counterclockwise with the 30# sleeve and remove the gasket. Remove the side bolts with the 6# hex socket. Pull the direction handle and upper panel assembly up.If it is difficult to pull out the expansion plate, use a flat-head screwdriver to pry open the slot of the upper connection board and pull it out at the same time.Move the direction handle and upper connection board assembly open and set them in place.

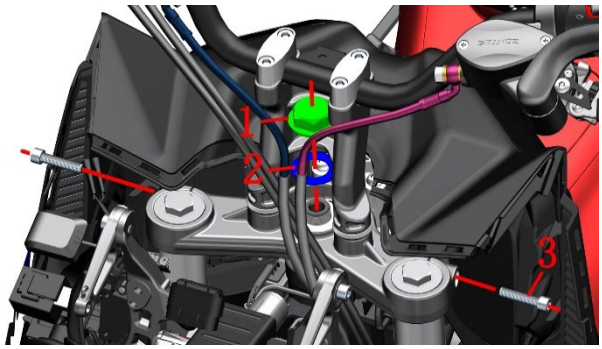

M350/368/250

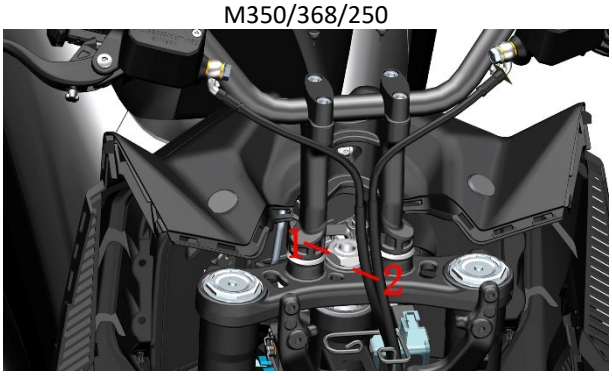

M368(ETC)

B. Adjust according to 310 adjustment steps. The nut torque is 100N. m (10.2 kgf. m, 74 lbf. ft).

3. Maintain steering bearings

If adjusting the steering bearing clearance cannot be restored, you need to remove the steering bearing to check whether the bearing, steel bowl is worn or rusted, lacks grease, etc.

4. Malfunction

Normally rotate the handle, if it feels more laborious, you need to investigate the following reasons:

a. Whether the steering mechanism is too tight, refer to the previous steps to adjust the steering mechanism to solve;

b. The steering mechanism bearing is rusty, the steel bowl or steel ball is damaged, and it needs to be disassembled and replaced;

c. The front tire pressure is insufficient and needs to be charged to the standard tire pressure, M310 is 260kPa (2.7 kgf/cm2, 37.7 psi), M125 front tire is 220kPa (2.2 kgf/cm^2,32 psi), M350/368/250/M368(ETC) is 240kPa (2.5 kgf/cm2, 35psi) under normal temperature conditions;

d. The column of the lower link plate is deformed and needs to be removed and replaced.

Front fork

Caution:

●M310 models every 10000km (6214 mile), M125/350/155/368/250 models every 8000km (4971 mile), M368(ETC) models every 12000km(7456mile), check whether the front fork is leaking or deformed, and whether the shock absorption and rebound are normal.

●Before riding each time, check whether there is leakage in the front shock absorber and whether the fasteners are loose to ensure driving safety.

● Bolt torque at the hollow shaft of the front wheel of the shock-absorbing bottom cylinder: 20N.m (2.0 kgf.m, 15 lbf. ft).

●When replacing hydraulic oil, use kerosene or diesel to thoroughly clean all parts. Use a graduated cylinder to measure oil is poured in one time, avoid mixing different hydraulic oils.
M310 measure 220±2ml (7.4±0.07 US oz, 7.7±0.07 lmp oz, 13.4±0.1 cu-in). M350 measure 386±2ml(13.05±0.07 US oz，13.58±0.07 lmp oz, 23.55±0.1 cu-in). M125/150 is 150±2ml(5.07±0.07 US oz，5.28±0.07 lmp oz, 9.15±0.1 cu-in)，M368 为 405±2ml(13.69±0.07 US oz，14.25±0.07 lmp oz, 24.71±0.1 cu-in).Theses vehiceles used 10W hydraulic。
M368 (ETC) is 32# damping oil with a volume of 450±5ml (15.2±0.17 US oz, 15.84±0.18 lmp oz, 27.45±0.31 cu-in).
●After traveling on dusty or muddy roads, you should clean up the foreign matter on the front fork tube (exposed chrome-plated cylinder) in time to avoid scratching the dust seal or oil seal and causing leakage; wipe it clean with a soft cloth.
●Do not use a high-pressure water gun to directly flush against the dust seal at close range.
●The vehicle should be parked in a ventilated and dry environment without driving for a long time. A dark and humid environment can easily cause the front fork tube to rust and make other parts of the vehicle rust. Coastal areas should have more frequent pre-maintenance damping than inland areas. After wiping clean, spray a small amount of anti-rust oil to prevent rust.

1. Check the appearance

a. After parking the vehicle firmly, let the front wheel hang in the air, and turn the direction knob to observe whether the front shock absorber is leaking; whether there are scratches, pits, rust, etc. on the surface of the front fork tube. Shallow scratches, small pits, and slight rust can be smoothed with fine sandpaper of about 2000 mesh. Wipe clean the dust or foreign objects in the dust-proof seal. If there has a dust cover, it should be moved away before inspection.



b. Check whether the bottom tube is painted off; whether the installation points of the front fender, the front wheel hollow shaft and the front brake caliper are broken or cracked. Check if there is any leakage at the bottom of the bottom cylinder.



c. If there is a large amount of hydraulic oil attached to the front fork tube, wipe it clean and observe after riding. If there is no oil stain or slight oil stain, it is the hydraulic oil accumulated during the assembly of the dust seal, and it can be judged that the oil seal is not leaking. If there is a small amount of oil stains or sludge mixture, remove the dust seal and wipe clean the front fork tube and oil seal surface, first compress the front shock absorber and then wipe clean and then press; repeat the above operation 10 times. Observe whether there is still on the front fork tube. If there is, the front shock absorber leaking oil needs to be replaced with the dust seal and oil seal. If not, it is a normal phenomenon that a small amount of hydraulic oil has accumulated during assembly.

d. Check whether there is any leakage at the bottom of the bottom cylinder with the help of a mirror or mobile phone lens. If there is a slight leakage, first check whether the bolts are loose. The bolt torque here is 20～26N.m (2～2.7 kgf.m, 15～19 lbf). ft). If there is still leakage after tightening, the gasket should be replaced.



2. Check the shock absorption performance

Pinch the front brake handle and press down forcefully. After releasing it, it should be able to compress smoothly and then return to normal. Repeat the operation several times to check. If there is a block, the shock absorber needs to be removed for investigation. If there is a collision with the front wheel or a high-speed bump, check whether the shock absorber is deformed. Check the shock absorption performance according to the maintenance schedule. It is necessary to prevent the vehicle from turning over during operation.

3. Remove the front shock absorption

Remove the front shock absorber according to the steps of removing the front shock absorber in the "Front Fork Assembly" of this manual.

4. Correct the front fork tube

If the front wheel of the vehicle passes a hurdle at a high speed or after a collision, check whether the front fork tube is deformed. Take the left shock absorption as an example. Use the end face of the front axle of the shock absorber bottom tube and the end face of the front fender mounting point to fix the shock absorber; or remove the front fork tube. Use a dial indicator to detect the amount of deformation in the axial direction of the front fork tube, and rotate the front fork tube to measure different positions.

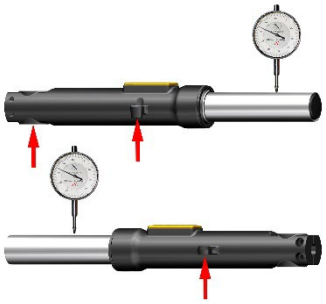

For slight deformation of less than 0.2mm (0.008 in), the front fork tube can be supported by a V-shaped iron block, and soft rubber, rubber, copper, etc. should be placed on the contact surface to prevent the front fork tube from being scratched. Use the press slowly and slightly, straighten the pressure and small stroke several times, and measure while straightening. The radial run out after correction should be less than 0.05mm (0.002 in). If the original bending deformation part is out of round after correction, it should be replaced. If the deformation is too large, the shock absorption should be replaced.



5. Troubleshooting

a. There is obvious impact noise when driving on uneven roads or emergency braking. The following items need to be checked:

Whether the spring of the shock absorber is broken or the elasticity drops;

Whether the hydraulic oil is insufficient or enters the air;

Whether there is too much hydraulic oil;

Whether the spring is axially bent and rubs against the front fork tube.

b. The following items should be checked for excellent shock absorption:

Whether there is too much hydraulic oil;

Whether the front fork tube is bent or deformed;

Has the spring been modified?

c. If the shock absorption is too soft, check the following items:

Whether the hydraulic oil with low viscosity is changed;

Whether the spring force drops;

Is there too little hydraulic oil?

Rear shock absorption

Caution:

●If the rear shock absorber has a lot of mud and sand, it should be cleaned in time to prevent soft and big stones from scratching the chromed parts and causing rust.

●Non-professionals should not disassemble the rear shock absorber by themselves.

●It should be maintained according to the regular maintenance table.

1. Check

a. One person straightens the vehicle and stabilizes the vehicle, and one person presses the rear armrest behind to observe whether the rear shock absorber can recover smoothly.

b. Check whether the shock-absorbing bolts are loose.

c. Grasp the upper part of the damping spring and rotate it in the radial direction. It should be able to rotate in a small amount. Check the bottom in the same way. If the upper part cannot be rotated, the shock-absorbing rubber buffer sleeve has aged and failed; if the bottom cannot be moved, the buffer sleeve on the rear rocker arm and the engine box has failed and needs to be replaced.

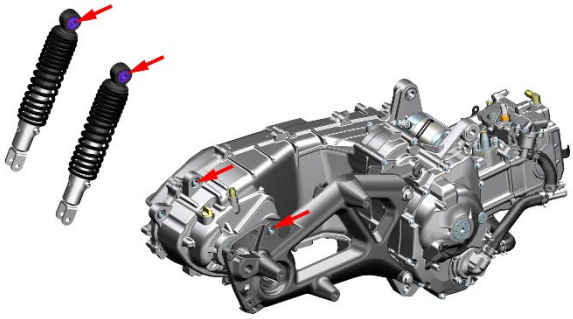

d. Check whether the weld at the bottom of the shock absorber is leaking.

2. Adjust the preload

The rear shock absorption of this vehicle can be adjusted according to the needs of the owner. Sort 1-5 levels, level 1 is the softest, level 5 is the hardest, and the factory defaults to level 2. Turning the compression spring preload length to the H direction makes the shock absorption harder; otherwise, the shock absorber becomes softer. The two rear shock absorbers need to be adjusted to the same gear.

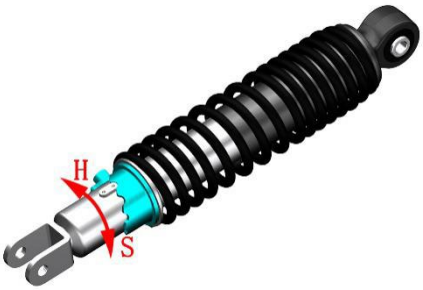

2.1 Adjust the right rear shock absorption M125/310/155

Use the 5# inner hexagon to insert into the hole of the right rear shock absorber adjuster, and rotate to the required gear in the direction of the arrow.



M350/368/250/368(ETC)

Use the adjustment wrench provided with the vehicle.



2.2 Adjust the left rear shock absorption

2.2.1 M310

a. Refer to the previous steps to replace the air inlet filter element and remove the left cover. Disassemble it as shown in the figure below.

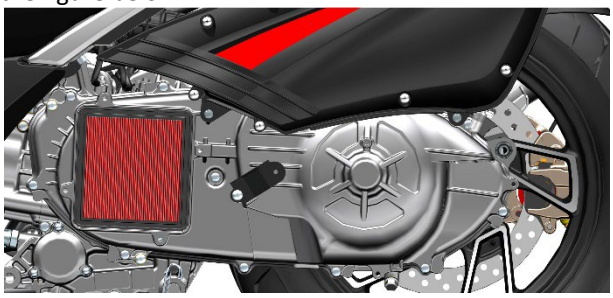

b. Use an 8# sleeve to remove the bolts (1) at the position shown in the figure.

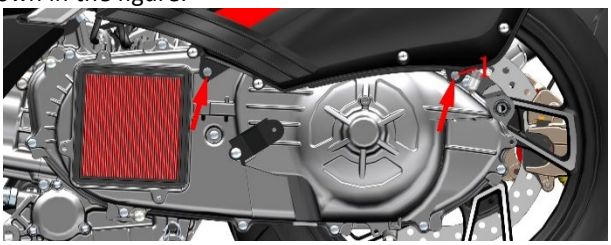

c. Use needle-nose pliers to clamp the exhaust pipe clamp on the inner side of the air filter and move it upward about 20mm (0.8 in). Pull the exhaust pipe out of the crankcase by hand.



d. Pull the tail of the air filter outward with one hand, and press the rear inner mud plate inward with the other hand. Separate the air filter from the rear inner mud plate.

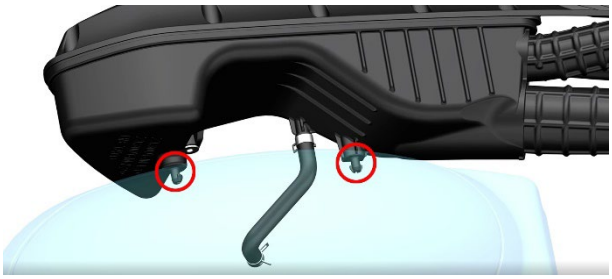

e. Open the air filter slightly, and adjust the left rear shock to the same gear with reference to the adjustment of the right rear shock absorption method.



2.2.2 M125/155

Use the 5# inner hexagon to insert into the hole of the left rear shock absorber adjuster, and rotate to the required gear in the direction of the arrow.



2.2.3 M350/368/250/368(ETC)

Use the adjustment wrench provided with the vehicle.



3. Replace the shock absorption

The M125/350/155/368/250/368(ETC) steps are similar to the M310, taking the M310 as an example.

a. After removing the muffler assembly, follow the steps “a” to “d” in the previous "Remove spark plug" to remove the side covers; follow the steps a to j in the throttle valve body to remove the stepper motor and clean up carbon deposits to remove the rear storage box. After disassembly, it is as shown in the figure below.



b. Remove 2 pieces of M6 decorative buckles(1) and 5 pieces of M8 decorative buckles(2). Remove the 2 swell nails (3).

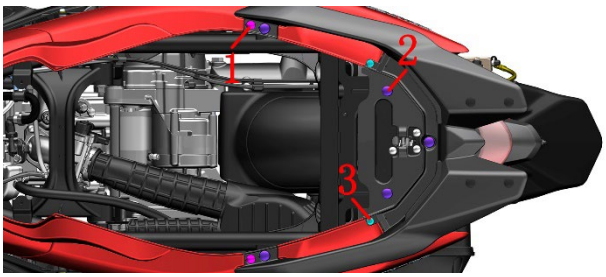

c. Use 4# inner hexagon to remove 2 bolts(4); after grasping the rear armrest, use 12# sleeve to remove 5 bolts (5), and then take off the rear armrest assembly.

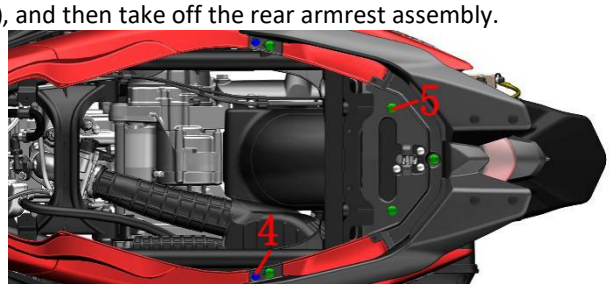

d. Remove the boltM6×14 at the front of the left tail skirt with a 4# inner hexagon. Remove the 2 expansion(3) nails at the bottom.

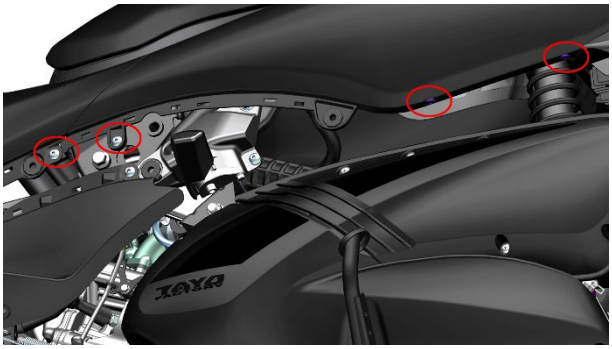

Grasp the left tail skirt and remove the swell nail (3), and take off the left tail skirt.



Remove the right tail skirt in the same way.

e. Pull down the front part of the rear mud plate, fix the nut with a 14# sleeve or a torx wrench, loosen the bolt completely with a 14# sleeve on the outside, and remove the nut. Be careful not to remove the bolt first. Remove the nut by the same operation on the other side. One person supports the rear wheel assembly, and one person removes the bolts on both sides; lower the rear wheel assembly to the ground. Nut torque standard: 30N.m (3.1 kgf.m, 22 lbf.ft).

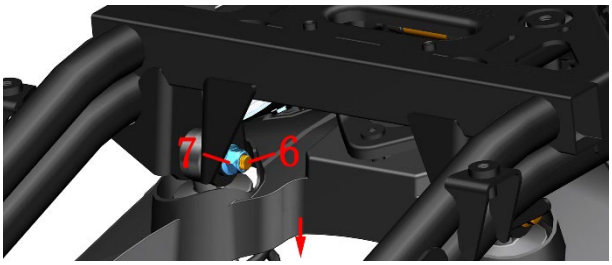

f. Grasp the rear right shock absorber and use a 12# sleeve to remove the bolt, and remove the rear right shock absorber. On the left side, pull the air filter out to expose the bolt head and then remove the bolt. Standard torque: 24N.m (2.4 kgf.m, 18 lbf.ft).

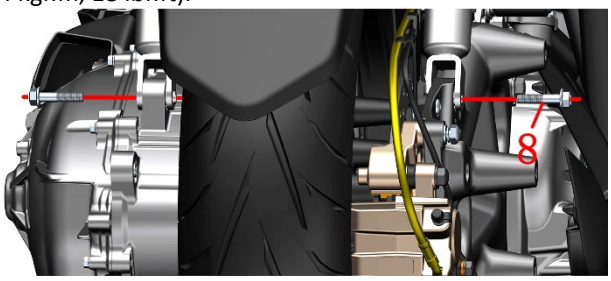

Bolts and nuts for body and engine installation

Caution:

●Regularly check the body fasteners according to the maintenance schedule.

●Loose engine fasteners will increase the vibration and affect the driving experience.

●The M125/350/155/368/250/368(ETC) steps are similar to the M310, taking the M310 as an example.

1. Check the fasteners for the critical parts

Check whether the front disc brake caliper bolts, front shock absorber bottom cylinder bolts, lower link plate bolts, rear rocker arm and engine connecting bolts, rear wheel spline shaft nuts, rear disc brake caliper bolts, and side bracket nuts are loose. Check whether the Split pin of the main bracket shaft is abnormal.



2. Check engine fasteners

Standard torque of 5 M12 nuts of engine cradle: 65N.m (6.6 kgf.m, 48 lbf.ft).

a. Refer to the steps for removing the rear storage box and tail skirt to remove it to the extent shown in the figure.





b. Check if the four nuts on the rear cradle of the fixed engine as shown in the figure are loose. The nut on the right front part (a in the figure) needs to be pulled out or pulled out of the high-pressure oil pipe and cable connector to facilitate tightening with tools.

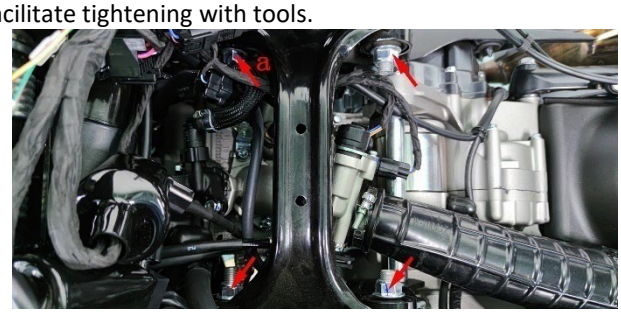

c. Use 4# inner hexagon to remove M6×14 bolt. Grasp the rear left pedal assembly and use a 12# sleeve to remove the 2 M8×35 bolts, and then remove the pedal assembly. Remove the rear right pedal assembly in the same way.

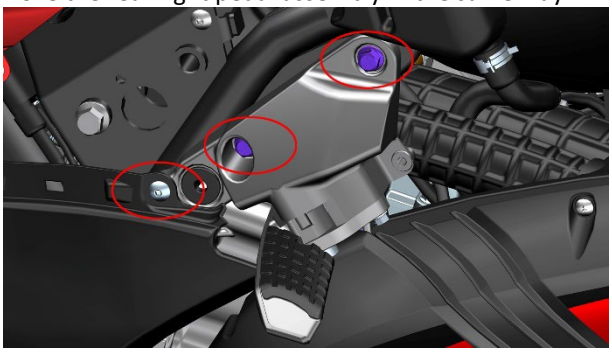

d. Check whether the engine nut is loose.

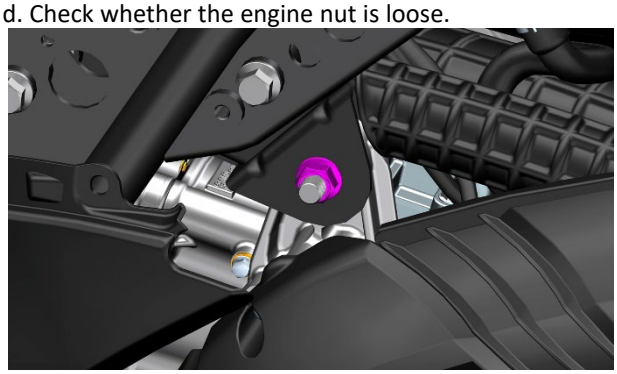

Side bracket

Caution:

●Park the vehicle on a flat and stable ground or a lifting platform, and put down the main support.

●When disassembling and installing the spring, it is necessary to prevent the spring from flying off suddenly and causing personal injury.

●The M125/350/155/368/150/250/368(ETC) steps are similar to the M310, taking the M310 as an example.

1. Check

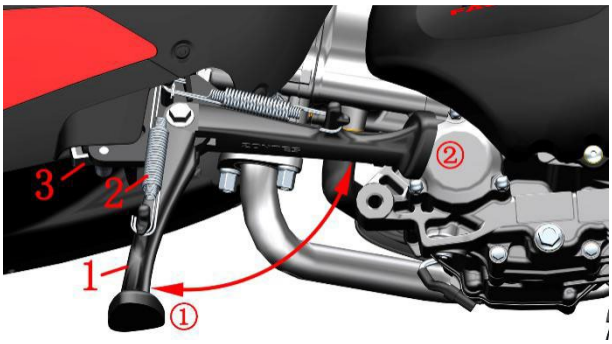

1. Side bracket 2. Side bracket spring 3. Side bracket flameout switch

①Parking position②Driving position

a. Check whether the side bracket spring is damaged and whether the elastic force is normal.

b. Check whether the side bracket rotates normally. Turning to the angle shown in Figure 1 should be able to automatically turn to the parking space under the spring force; when the angle in Figure 2 is turned to the parking space automatically. If necessary, remove the side bracket for lubrication.





c. Check whether the flameout switch function is normal.

The vehicle should not be started when the side bracket is lowered (parking position); the vehicle cannot be started when the side bracket is retracted (driving position) without pinching the front or rear brake handle; After starting the vehicle, put down the side brackets, and the flame should be automatically turned off, otherwise it is necessary to troubleshoot the flameout switch or brake switch failure.

d. Check whether the side bracket mounting plate is deformed or cracked.

2. Lubrication

a. Put away the side bracket so that the spring is in the shortest position for easy disassembly.

b. The thick steel wire can be rolled into a circle and put into the spring(1) pull hook. Pay attention to ensure that the steel wire cannot loose or fall apart during the pulling process.



C. Grasp the side bracket with one hand, and pull it in the direction of the arrow with the other hand to remove the spring.

d. Put down the side bracket, and use a 14# sleeve or torx wrench to remove the nut(2) counterclockwise. After holding the side bracket firmly, use a 14# sleeve to remove the bolt(3) counterclockwise, and take off the side bracket.



e. Remove the side bracket bushing(4) from the frame.

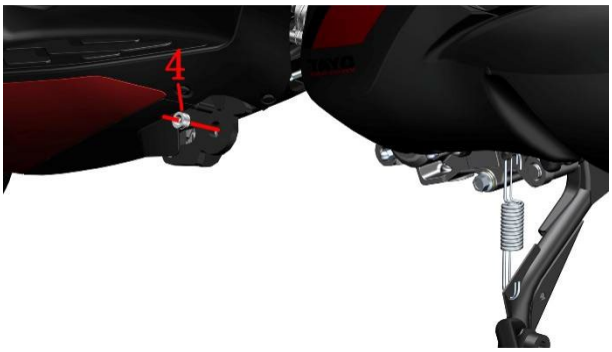

f. Use diesel or kerosene, or a clean cloth to wipe off the remaining grease. Apply a proper amount of grease to the two installation planes inside the side bracket and the surface that matches the flameout switch, and try not to apply it to the threaded holes.

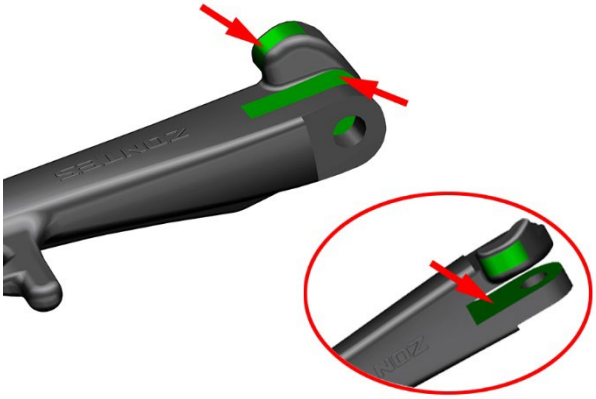

Main bracket

Caution:

●Park the vehicle on a flat and stable ground or a lifting platform, and put down the side brackets.

●When disassembling and installing the spring, it is necessary to prevent the spring from flying off suddenly and causing personal injury.

●The M125/350/155/368/150/250/368(ETC) steps are similar to the M310, taking the M310 as an example.

1. Check



1. Main support 2. Main support spring 3. Main support return spring post 4. Cushioning glue

a. Right the vehicle, step on the effort-saving lever of the main support with your foot, and check whether the spring force is normal. The main support should be able to quickly return to the driving position under the elastic force of the spring itself.

b. Check whether the buffer glue is aging or not.

c. Check whether the return spring post of the main support is deformed.

d. Check whether the main bracket has obvious deformation and whether the welding part is cracked.

2. Lubrication

a. Keep the main bracket in the retracted position, on right side, use pliers to remove the split pin(1) in the direction of the arrow, and remove the gasket(2). Knock out the main support shaft (3) from right to left. Pay attention to the protection measures at the spring of the main support to prevent the spring of the main support from suddenly loosening and flying out and causing personal injury. It can be covered by a hard object, or the spring can be tied up with a rope or thin iron wire.

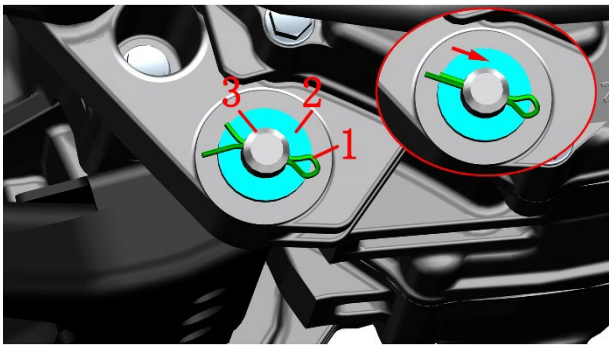

b. Remove the spring from the main support.

c. Apply a proper amount of grease to the end face, inner hole of the engine box bushing and the surface of the main support shaft.

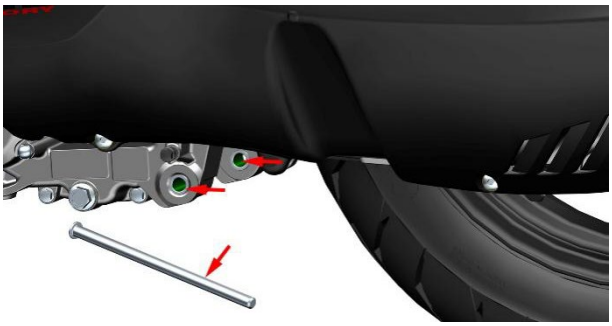

3. Install the main bracket

After aligning the main bracket with the mounting holes, insert the main bracket shaft from the left. After inserting the gasket, Insert the split pin, then bend the split pin on both feet to prevent them from falling off.

Hang the main support spring on the main support first, and then use a Phillips screwdriver to hang the spring on the return spring post of the main support.

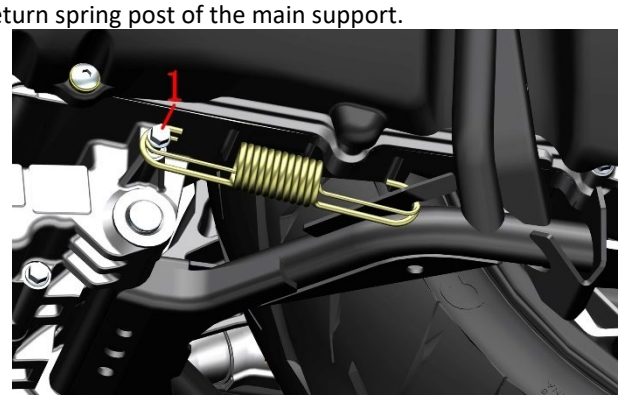

4. Replace the return spring post of the main support

After removing the main bracket referring to the previous steps, use an 8# sleeve to remove the main bracket return spring column counterclockwise. It is recommended to apply a proper amount of thread fastening glue before assembly. Torque: 12 N.m (1.2 kgf.m, 9 lbf. ft).

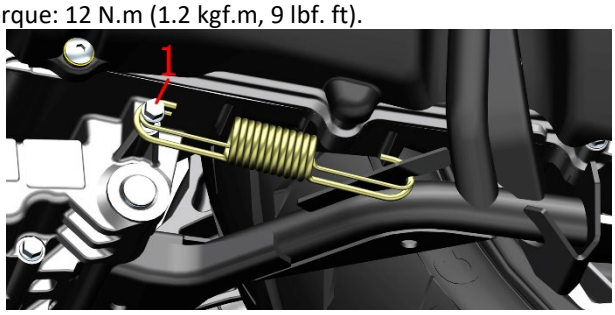

Sound, light, and electrical device Inspection

Caution:

●Before driving, check whether the lights of the whole car are normal, including turn signals, tail lights, brake lights, headlights, etc. Whether the horn is normal. Whether the windshield rises and falls normally.

●The M125/350/155/368/150/250/368(ETC) steps are similar to the M310, taking the M310 as an example.

1. Check

For details of the lamps and lanterns of the whole vehicle, please refer to the lamps and lanterns distribution diagram in the vehicle information of this manual.

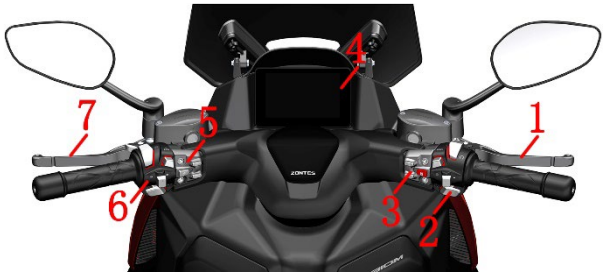

1. Front brake handle 2. Right handle switch 3. Right auxiliary switch 4. Meter 5. Left auxiliary switch 6. Left handle switch 7. Rear brake handle

a. Park the vehicle on a flat ground or a lifting platform, lower the main support, and retract the side support.

b. Press the unlock button of the right auxiliary switch①After the vehicle is unlocked and energized, confirm that the flameout switch④ is pulled to " ", pinch the front or rear brake handle, and press the start button② to start the engine.

③Light switch: keep it at the "●" position, check whether the front position light, rear position light and license plate light are normally on; pull it to " " to check the handle backlight, front light, front position light, rear position light, and license plate The lights should all be on.

⑤ECO button: Press the meter and it should light up "E", and press it again to light up "S", and the two modes can be switched freely.M125 do not have this button.

⑥SEAT: Press to check whether the cushion lock is normally opened.

⑦FUEL: Press to check whether the fuel tank cover is normally opened.

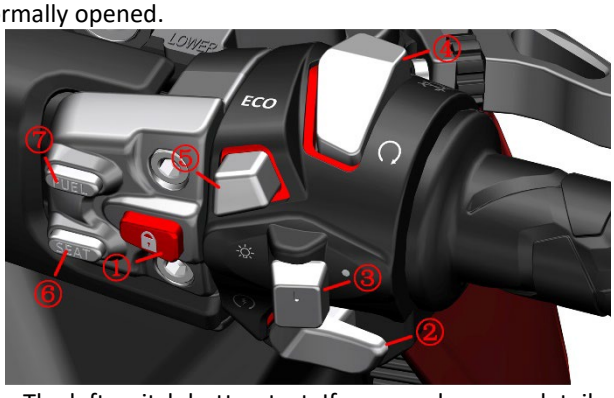

c. The left switch button test. If you need a more detailed understanding of each button function, you can check the driver's manual. Here is only a brief description of how to test whether it is normal.

①SET key: Short press SET to enter the main menu/confirm selection. Long press to return to the main interface. Operate this button when driving a vehicle is prohibited.

②MOD key: Select the next item. Operate this button when driving a vehicle is prohibited.

③Windshield switch: Press the windshield glass to complete from retracting to opening or from opening to retracting.

④Steering switch: Push it to the right to check whether the front right and rear right turn signals are flashing normally; press the turn signal to turn off; push it to the left to check whether the left front and left rear turn signals are normal.

⑤Hazard warning lights: Press it down and the 4 turn signals will flash, press it again to turn off. It should comply with the requirements of traffic laws and should not be used in non-emergency situations.

⑥Horn: Press the horn to sound once to confirm whether the sound is clear and loud.

⑦Dimmer switch: Pull it to "" to check whether the high beam light is on, and the high beam indicator symbol on the meter lights up at the same time. Pull to "" to check whether the low beam light is on. The far and low beams should be used reasonably in accordance with traffic laws and regulations.

⑧Overtaking warning light switch: When pressed in the low beam, it will turn on the high beam.

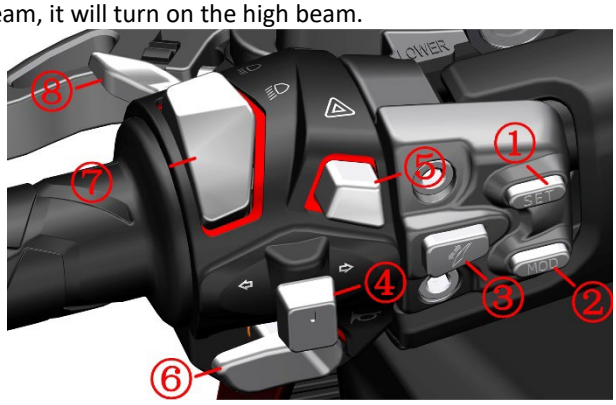

d. Check the battery voltage

Open the cushion, take off the battery cover and use a multimeter to measure the battery voltage. If it is lower than 12V, you should use the charger provided with the car to charge it in time. Be careful not to overcharge and over discharge, and the charging voltage of the charger must not be higher than 15V. When the car is not used for a long time, it should be charged regularly in accordance with the requirements of the driver's manual. If the battery fails, it should be properly handled by a professional recycling agency, and do not discard it at will to avoid environmental pollution.



or



If the battery power supply fails to start, it can be charged through the PKE charging port.

M125/310 charging

Open the right storage box cover, insert the buckle with your fingernail or a thin flat-blade screwdriver, press inward and pull out the buckles on both sides, and then remove the right storage box cover.



Open the protective cap①, pull out the PKE insurance③, first insert the DC output plug of the charger provided with the car into the PKE charging port; then connect the charger input AC terminal to 110-220V household AC.

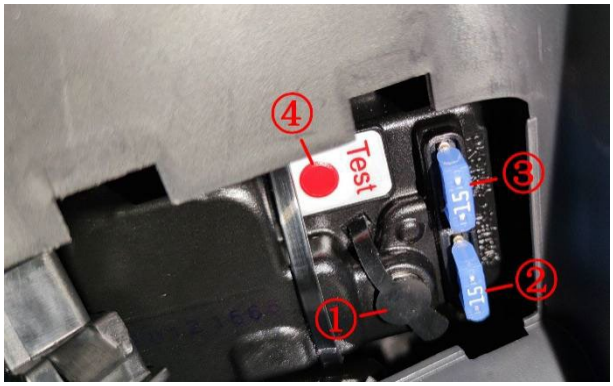

① is the protective cap for the charging DC interface;② is the charging insurance;③ is the PKE insurance, which must be unplugged when charging the battery through the DC interface with the charger;④ is the TEST button, which function is same as the unlock button on the auxiliary switch.

M350/155/368/150/250/368(ETC) charging

Press the button indicated by the arrow to open the right storage box cover.



Press down the central cylinder of the expansion nail with 4 # hexagonal socket, and then take down the expansion nail. Pull out the cover plate. Note that the back of the cover plate is pasted with a non inductive antenna and cannot be pulled by force.



Open the rubber plug and insert it into the original standard charger DC plug. Then plug the AC socket into the 110-220V power supply. The battery damage caused by using inferior charger is not included in Three Replacement Policy.

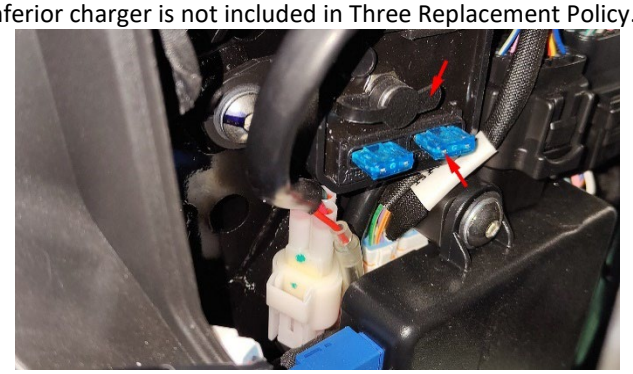

●Note: When reassembling batteries or fuses, please remember to reset the EFI hardware. For details, see the service information in this section.

2. Headlight height adjustment

Caution:

●The height of the headlights is too high or too low, which will affect safe driving. The light height should be adjusted reasonably according to the presence or absence of the occupant and the weight change of the driver.

●It is strictly forbidden to adjust the light height during riding. It is recommended to find a smooth road with a straight line distance of about 150 meters for adjustment under the premise of not affecting traffic safety at night.

Use a polished rod with a diameter of 6mm (0.24 in) and a length of 150～200mm (6～8 in) with a Phillips screwdriver from just below the headlights and go up through the dimming hole of the horn bracket, and align it with the serration of the dimming bolt; Rotate the clockwise to turn down, and counterclockwise to turn up.

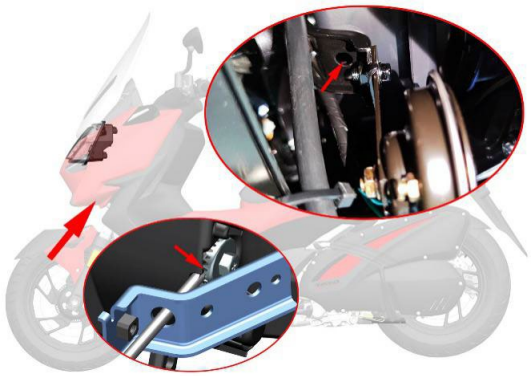

3.Fuse box

Caution:

●If the fuse is blown, you must replace the fuse of the same specification. It is forbidden to use wires such as copper or iron wire for direct connection.

●If it is blown after replacement, you need to troubleshoot the entire vehicle cable before replacing it.

●This vehicle uses a small fuse. The width is about 11mm (0.43in), the length is about 17mm (0.67in), and the thickness is about 4mm(0.16in).

●Use the buzzer file of the multimeter to connect the exposed metal part of the fuse to judge whether it has been blown, or use a tool to unplug and observe.

Refer to the previous steps to remove the battery cover and then pull up the fuse box. After opening the fuse box cover, check whether the fuse is normal.

No.	Name	Function	Specification
①	Main insurance	Protect all circuits	25A
②	ECM	Protect ECM, ECM relay, oil pump relay and other electrical devices	15A
③	Regular power supply	Protect fans, meters, and anti-theft device connectors	15A
④	Hydraulic control unit motor	Protect ABS hydraulic control unit motor	25A
⑤	Reserve	-	25A
⑥	Reserve	-	15A
⑦	Hydraulic control unit ECU	Protect the hydraulic control unit	10A
⑧	Light	Protect the headlight	10A
⑨	Reserve	-	15A
⑩	Reserve	-	10A

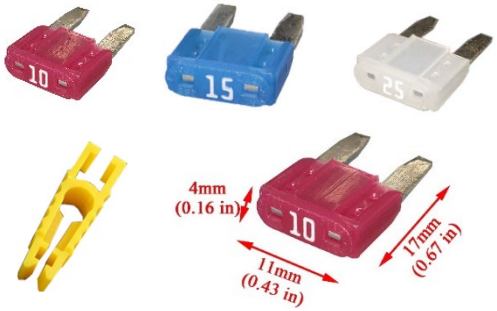





No.	Name	function	Specification
①	start up	Protection starting circuit	10A
②	ABS	Protect the ABS controller	10A
③	Assistant	Protect position lights, turn signals, tail lights, brake lights, license plate lights, horns, overtaking lights and other lamps	10A
④	Others	Protect the deputy handle switch, Speedometer, windshield, anti-theft device connector	10A

The fuse box of M310 folding rear compartment is shown in the figure below. There are two 10A spare fuses on the outside of the fuse box.



The M310 integrated rear compartment fuse box is shown below:

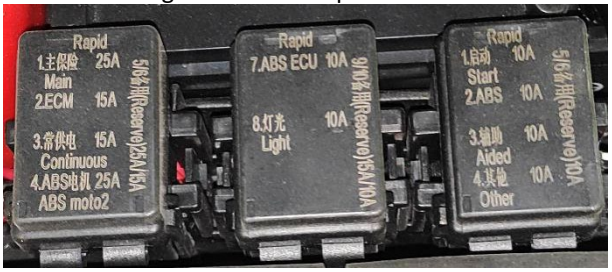

The M350/250 fuse box is shown below:

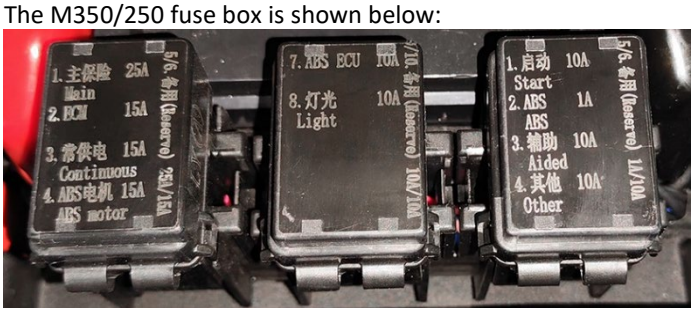



The M155 fuse box is shown below:

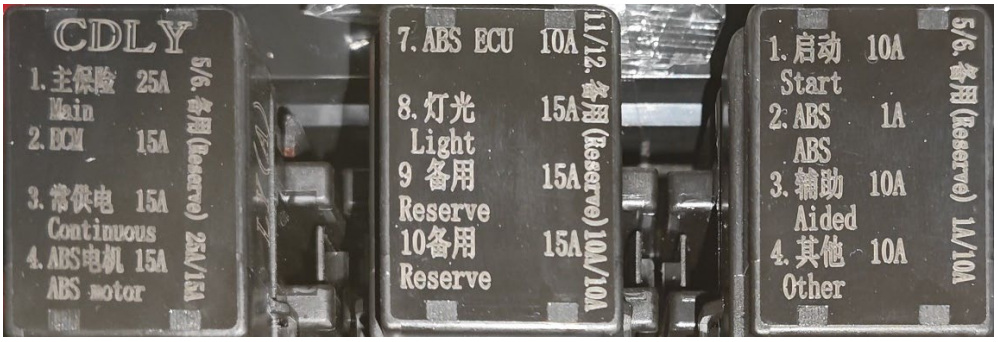

The M368 fuse box is shown below:

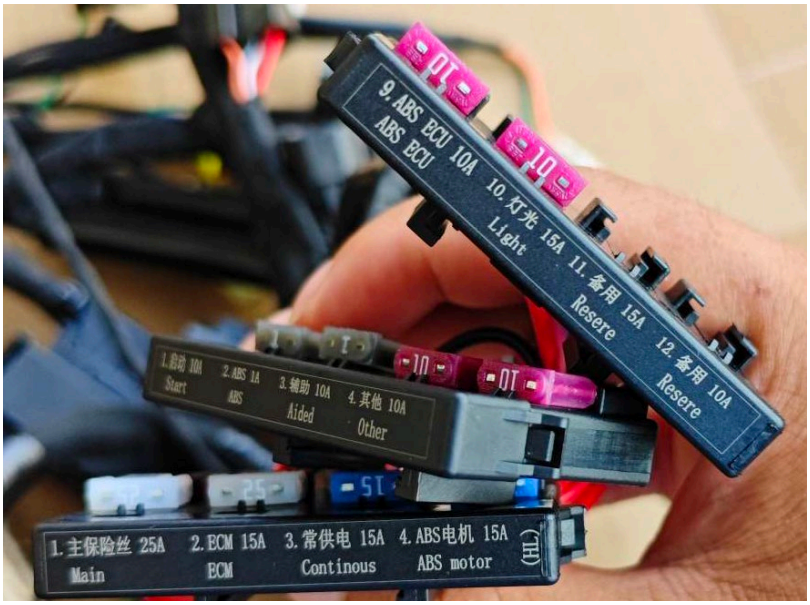

The M368(ETC) fuse box is shown below:



4. Troubleshooting

If the button cannot be pressed, it is directly judged as a switch problem. If there is no response when pressed, it is necessary to judge the problem of the switch, circuit, or electrical device.

4.1 Right hand switch

M125/150/310/350/250/368

a.No response when pressing the start button：

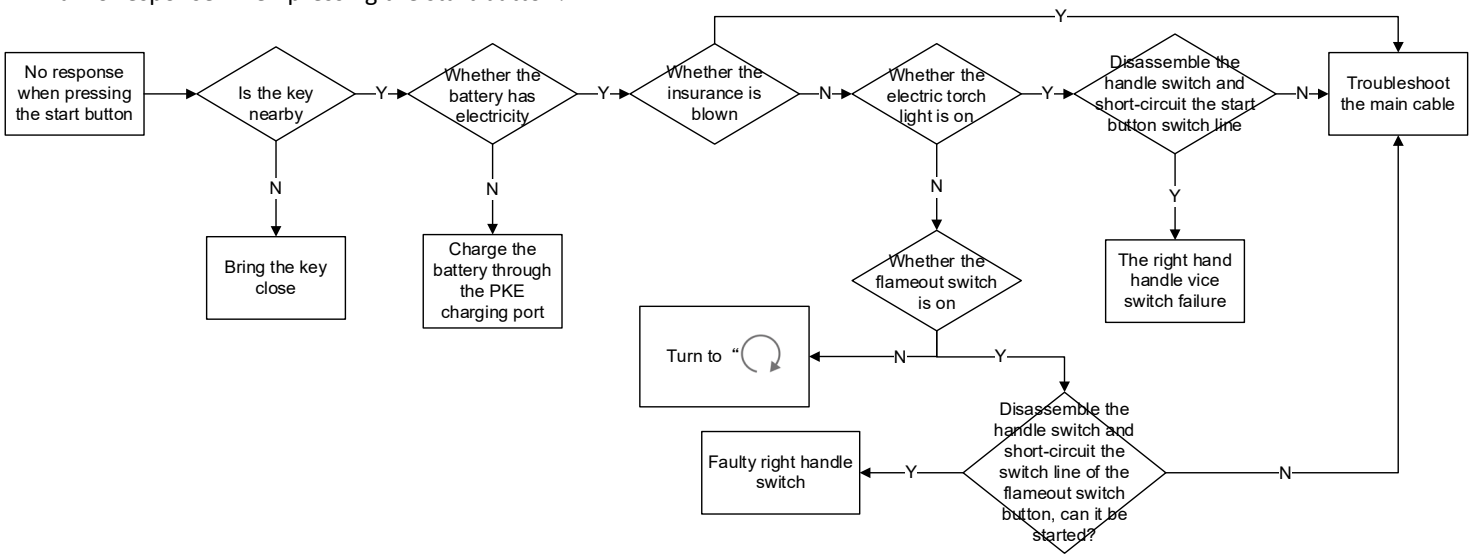

b. When the light switch is turned on, the headlight does not turn on, check whether the light fuse is blown, if it is blown, check the cable fault; if it is normal, disconnect the handle switch and short the light switch line, if it is lit, it is judged as a switch failure. Otherwise, check for cable or headlight failures.

c. The "E"/"S" mode cannot be switched by pressing the ECO button. Disconnect the switch and short the ECO button switch line. If it is lit, it is judged as a switch failure. If it is not lit, check the meter and cable failure.

M368(ETC)

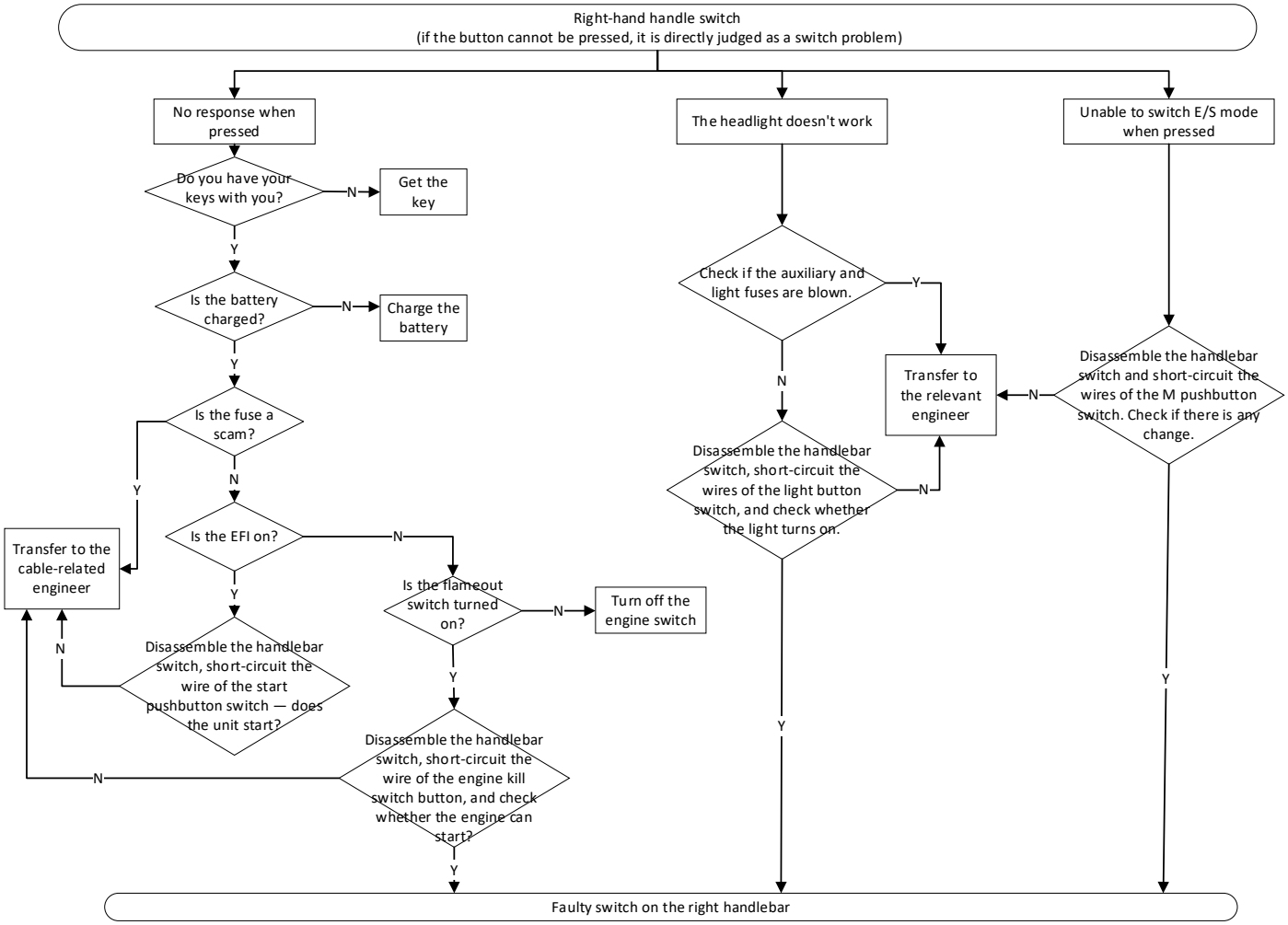

4.2 Right hand handle vice switch

M125/150/310/350/250/368

a. “FUEL” Button failure

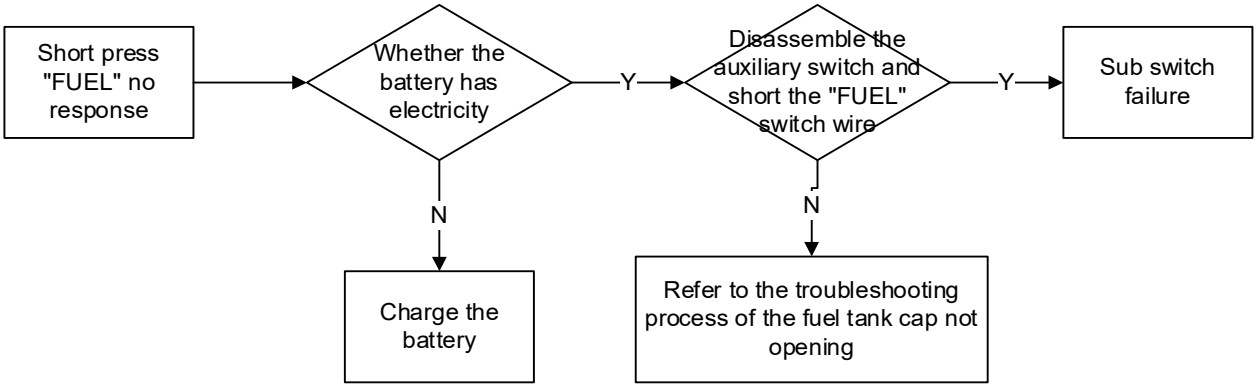

b. No response at start-up

If the engine cannot be started, please refer to the previous "No response when pressing the start button" for troubleshooting.

c. "SEAT" button failure

If the battery is out of power and inconvenient to charge, or the cushion lock fails to open, you can fill in the quality feedback form and let the engineer guide the method of manually opening the cushion. For safety reasons, this manual does not provide this method.

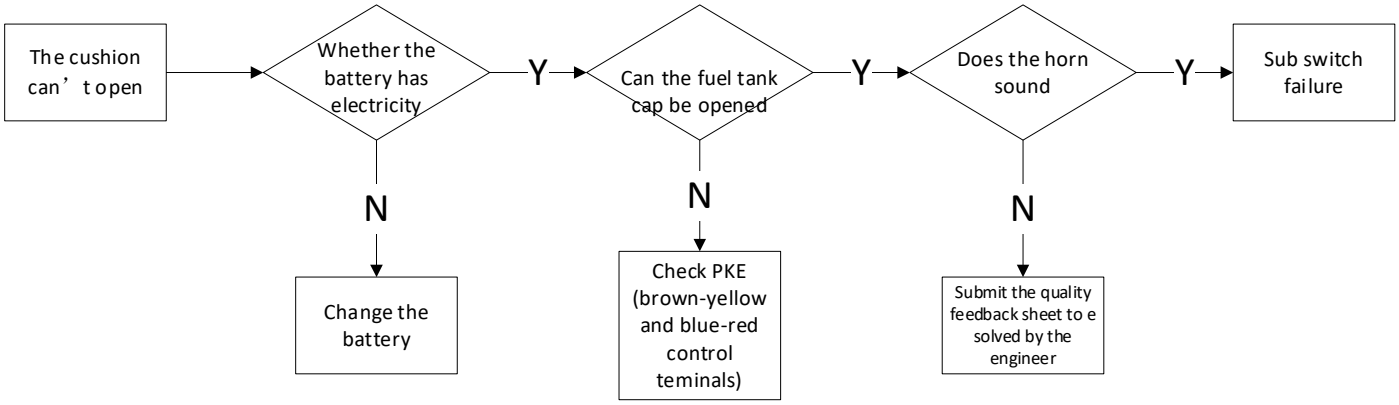

d. “ 🔒 ” Not responding

There is a detailed description of PKE functions in the driver's manual, including the method of emergency starting the vehicle when the sensor key is exhausted, and the specific meaning of the buzzer sound.

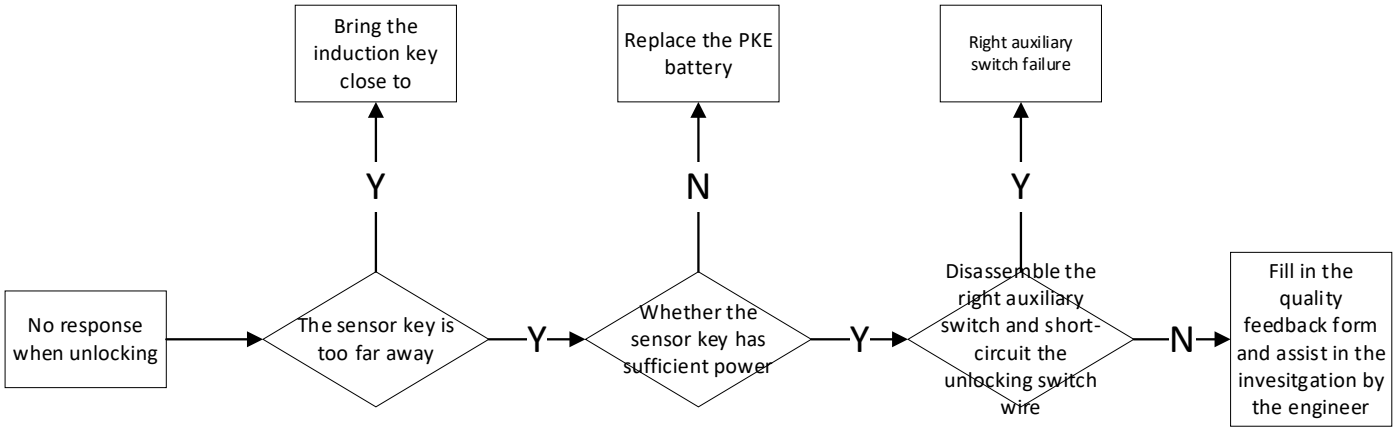

4.3 M125/150/310/350/250/368 Left hand handle auxiliary switch

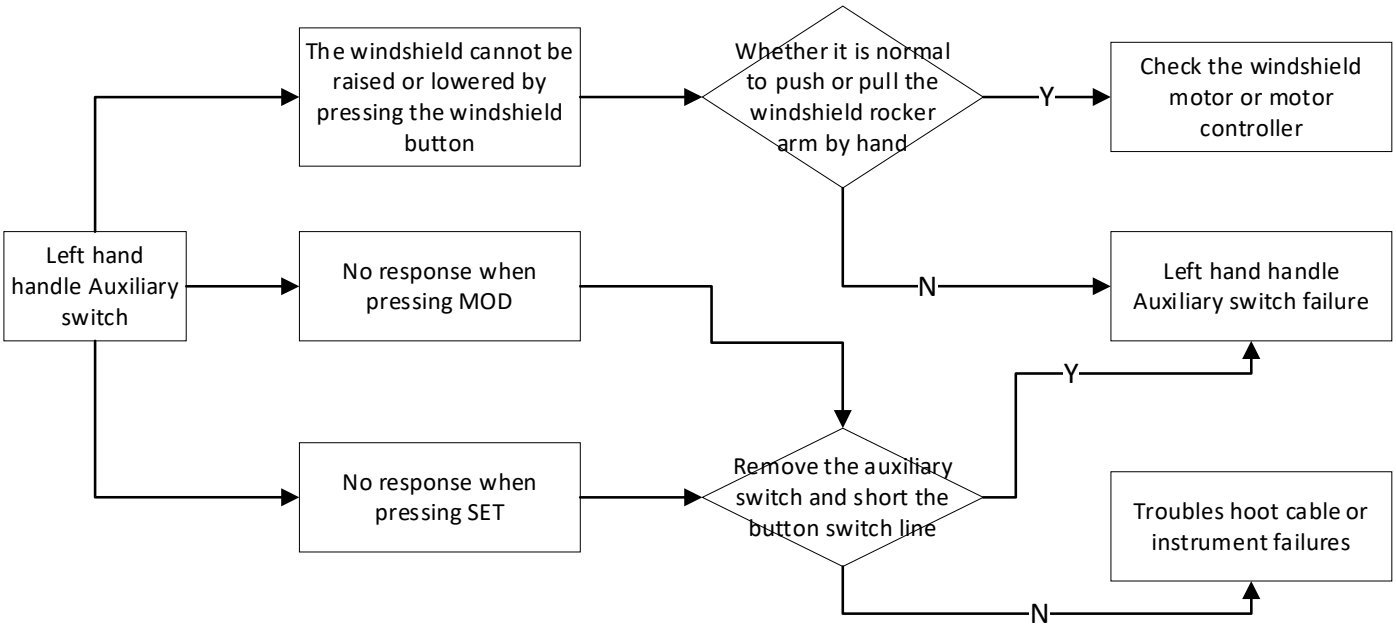

4.4 Horn

Caution:

●There should be more than 5 seconds interval when adjusting or checking the horn. Continuous sounding may cause ablation of the internal coil of the horn.

●The horn is a riveted structure, which is difficult to restore after disassembly.

●It is prohibited to adjust the bracket nut③.

a. If the horn switch does not respond, please refer to the troubleshooting process of the left-hand switch on the next page

b. The speaker sounds abnormal

If the sound is small, hoarse, etc., first confirm whether the battery is sufficient, and turn on the headlights to determine whether the battery is sufficient according to the brightness of the light. It is normal to start the engine and raise the speed, but abnormal low speed can also be judged as insufficient battery power. The battery needs to be charged.

If the power is sufficient, check whether the horn adjustment bolts① and nuts② are loose. If they are loose, tighten them and check again. If the fault cannot be eliminated after tightening, try to loosen the nut② and then use a Phillips screwdriver to fine-tune the bolt①. If the horn does not sound, turn it counterclockwise about 270 degrees, if it is hoarse, turn it clockwise until the sound is normal; tighten the nut② after the sound is normal. If the fault persists, it is judged that the horn is faulty and needs to be replaced.





4.5 Left hand switch

M125/150/310/350/250/368

The left hand switch controls the turn signal, horn and far, low beam, hazard warning light, and overtaking light. It is difficult to check if there are more lines.

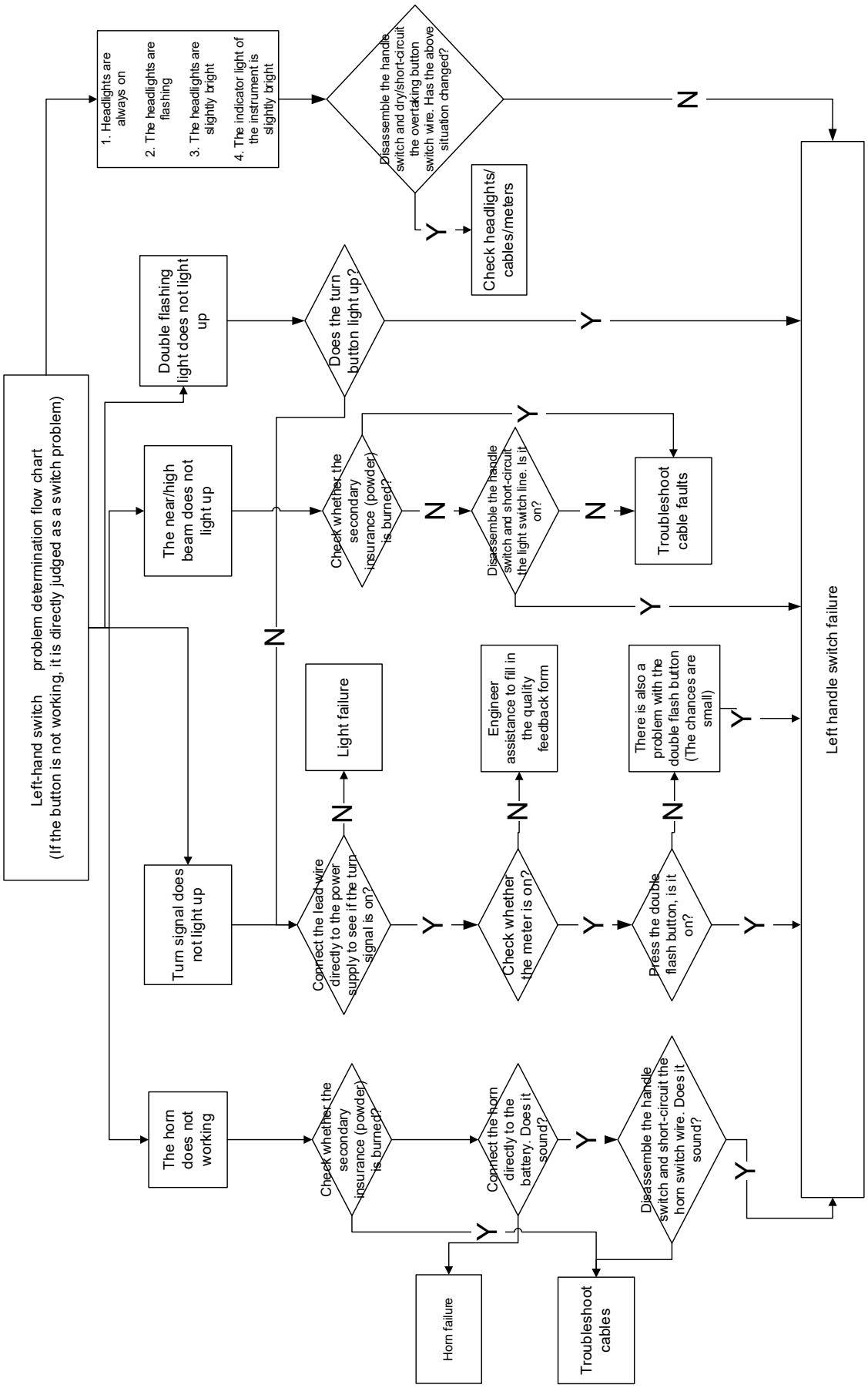

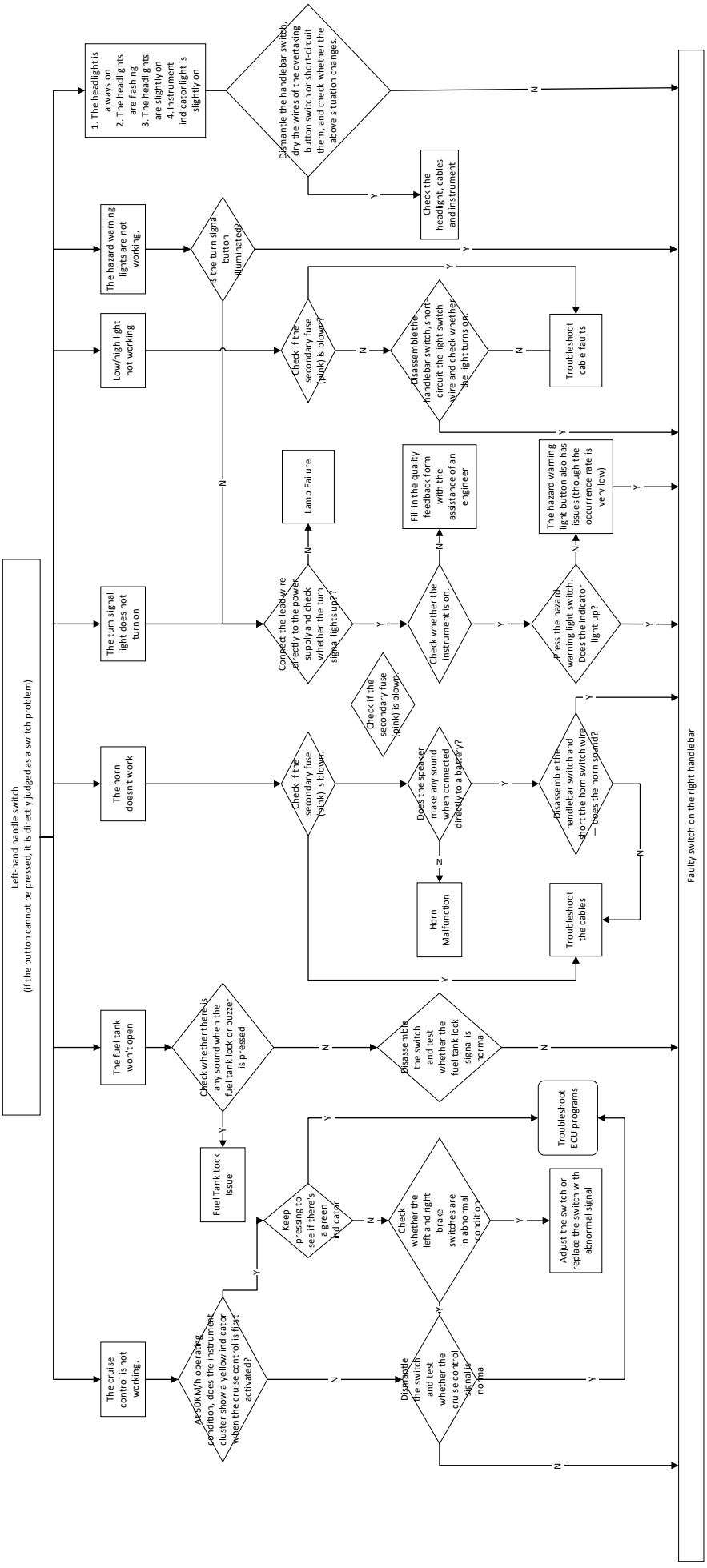
Left-hand handle switch
(if the button cannot be pressed, it is directly judged as a switch problem)
1. The headlight is always on
2. The headlights are flashing
3. The headlights are slightly on
4. Instrument indicator light is slightly on
Dismantle the handlebar switch, dry the wires of the overtaking button switch or short-circuit them, and check whether the above situation changes.
Check the headlight, cables and instrument
The hazard warning lights are not working.
Is the turn signal button illuminated?
Low/high light not working
Check if the secondary fuse (pink) is blown?
Disassemble the handlebar switch, short circuit the light switch wire and check whether the light turns on.
Troubleshoot cable faults
The turn signal light does not turn on
Connect the lead wire directly to the power supply and check whether the turn signal lights up?
Lamp Failure
Check whether the instrument is on.
Fill in the quality feedback form with the assistance of an engineer
Press the hazard warning light switch. Does the indicator light up?
The hazard warning light button also has issues (though the occurrence rate is very low)
Check if the secondary fuse (pink) is blown
The horn doesn't work
Check if the secondary fuse (pink) is blown.
Does the speaker make any sound when connected directly to a battery?
Disassemble the handlebar switch and short the horn switch wire — does the horn sound?
Horn Malfunction
Troubleshoot the cables
The fuel tank won't open
Check whether there is any sound when the fuel tank lock or buzzer is pressed
Disassemble the switch and test whether the fuel tank lock signal is normal
Fuel Tank Lock Issue
Troubleshoot ECU programs
The cruise control is not working.
At 50KM/h operating condition, does the instrument cluster show a yellow indicator when the cruise control is first activated?
Keep pressing to see if there's a green indicator
Check whether the left and right brake switches are in abnormal condition
Adjust the switch or replace the switch with abnormal signal
Dismantle the switch and test whether the cruise control signal is normal
Faulty switch on the right handlebar
Y
N

4.6 Light

Caution:

●When using wires to detect lamps, please pay attention to distinguish the positive and negative poles. For detailed wire colors, please refer to the electrical schematic diagram in the driver's manual provided with the car.

The troubleshooting methods of the lamps are basically the same. You can directly lead the wires to the battery with the battery. If the lamp is normal, you need to check the cable or switch failure, if it is not normal, it is the lamp failure. The vehicle lamps are all LED, and the lamp housing is usually ultrasonically welded or sealed with glue and the waterproof performance will be invalid after disassembly.

●The luminaire is reserved with ventilation holes. When the ambient humidity is high, water mist may form inside the luminaire, which generally does not affect the use. It will disappear automatically after the humidity drops.

●The surface of the lamp should be kept clean. It can be moistened with clean water and then gently wiped with a clean soft cloth. The soft cloth should be changed to a different position or cleaned with clean water each time the soft cloth is wiped. If it is wiped directly, the remaining fine sand particles may scratch the surface of the lamp.

The general process of lamp troubleshooting:

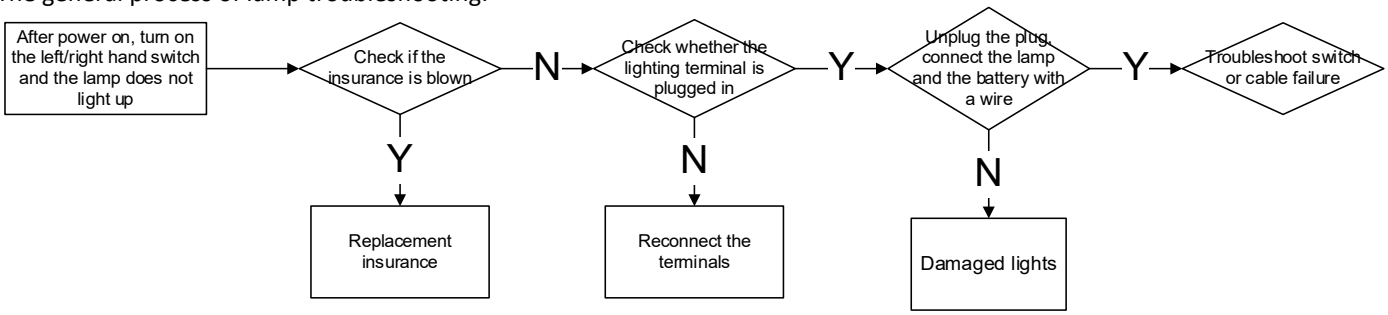

4.7 Windshield failure

M125/150/310/350

When the windshield switch is pressed, the windshield lifts and falls abnormally, which can be investigated separately according to the following two phenomena.

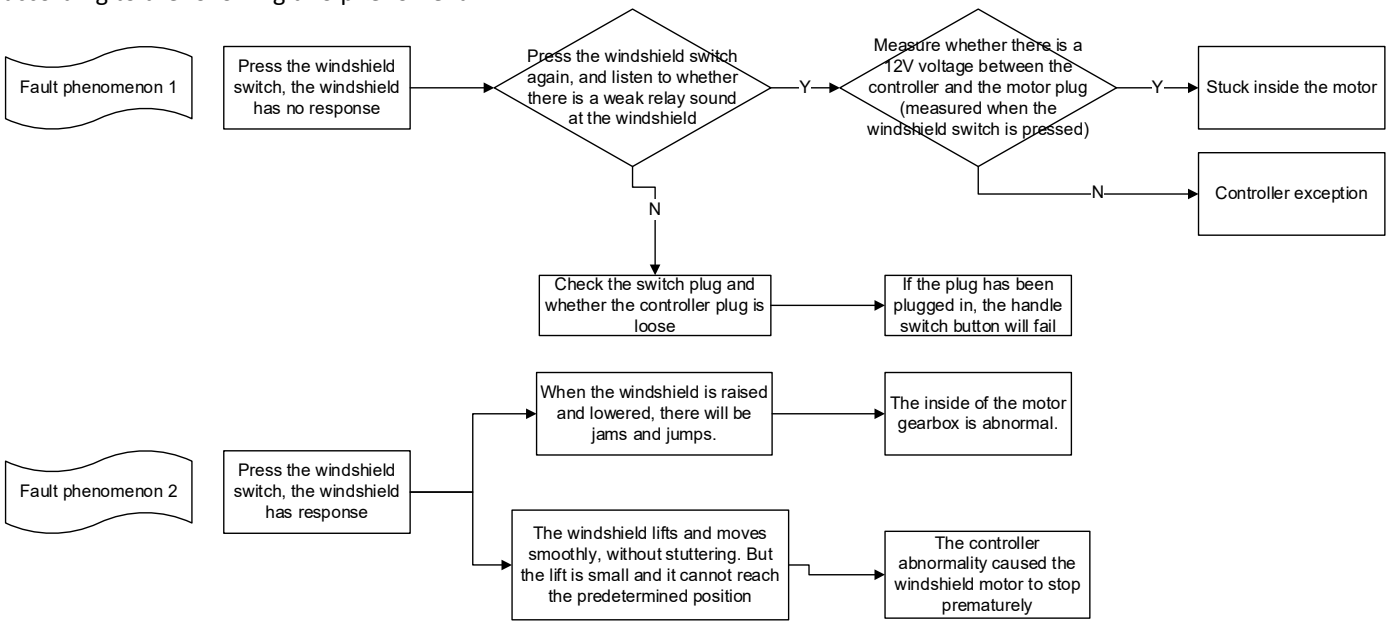

4.8 M368 ECT Electronic throttle grip rubber sleeve

Throttle signal fault

P2123	Electronic Throttle Pedal Position Sensor 1 Signal Voltage Too High
P2128	Electronic Throttle Pedal Position Sensor 2 Signal Voltage Too High
P2122	Electronic Throttle Pedal Position Sensor 1 Signal Voltage Too Low
P2127	Electronic Throttle Pedal Position Sensor 2 Signal Voltage Too Low

No.	Fault Phenomenon	Troubleshooting Process
1	Pulling the throttle results in no response from the vehicle	First, check whether the electronic throttle signal wire of the handlebar switch is in good contact, without looseness, and whether the wire color and position are correct; check whether there are fault codes shown in the above figure on the instrument (check the relevant fault codes in the instrument - vehicle information - fault information during troubleshooting). If there are fault codes, replace the electronic throttle heated handlebar; if there are no fault codes, contact the EFI engineer for troubleshooting.
2	The accelerator is weak and cannot reach high speeds	First, check if there are any retracted pins in the handlebar switch connector; check if the instrument displays the fault code shown in the figure above (check the relevant fault code in the instrument - vehicle information - fault information during troubleshooting). If there is a fault code, replace the electronic throttle heating handlebar; if there is no fault code, contact the EFI engineer for troubleshooting;
3	The accelerator pedal has returned, but the fuel does not return	Check if the dashboard has the fault codes shown in the above figure (check the relevant fault codes in Dashboard - Vehicle Information - Fault Information during troubleshooting). If there are fault codes, replace the electronic throttle heating handle; if there are no fault codes, contact the EFI engineer for troubleshooting;

Sticking throttle grip

No.	Fault Phenomenon	Troubleshooting Process
1	The handlebar grip is stuck and fails to return	Remove the electronic throttle grip and check if it can return to its normal position. If it cannot, please replace the electronic throttle grip. If it can, please check if the handlebar tube balance weight interferes.

3. EFI system

Know Before Service

Caution:

1. The structure and working principle of the EFI system are relatively complicated, and it is necessary to have a certain understanding of the working principle and structural characteristics of each EFI system before checking and troubleshooting. The content of this chapter requires certain maintenance experience. It is recommended to check or repair with a qualified maintenance organization.
2. Please keep the fuel in the fuel tank at least 3L (3.17 US qt, 2.64 lmp qt, 0.79 US gal, 0.66 lmp gal), otherwise it will affect the normal operation of the EFI system. Instrument oil level display 1 grid or less need to be replenished fuel as soon as possible.
3. When the vehicle is parked for more than 3 hours, the vehicle should be energized before the first start. Turn on the flameout switch "" and wait for the fuel pump to complete the fuel pressure before starting the vehicle.
4. If you fail to start several times, the cylinder may have been flooded. You need to turn the throttle to the end and press the start button for 3 seconds to execute the cylinder cleaning procedure.
5. If the battery low voltage warning symbol flashes, charge the battery in time; too low voltage may cause the EFI components to fail to work normally, fail to start or start difficult, insufficient power, etc.
6. The EFI system needs to be reset when the battery is reinstalled, the power is suddenly cut off during driving, the idling speed is abnormal, and the insurance is re-plugged. The specific method is as follows:
   a. Unlock the vehicle and support the main bracket;
   b. Pinch the brake and start the vehicle;
   c. Pull the engine speed above 3000 rpm;
   d. After releasing the throttle, turn off the flameout switch and lock the car;
   e. After waiting for 5 seconds, unlock the vehicle again to complete the reset of the EFI system.
7. Pay attention to the following when checking or troubleshooting EFI system failures:
   a. After power-on, the parts connected to the 12V power supply should not be removed at will to avoid the self-inductance of the coil in the electrical appliance and cause the instantaneous voltage to damage the ECU or sensor.
   b. Do not blindly disassemble and inspect when failure occurs. Check the electrical control part after confirming that the mechanical part is normal.
   c. During the fault diagnosis, give priority to using the diagnostic Speedometer to read the fault code or determine the fault code according to the flashing frequency of the fault indicator, and conduct targeted inspections.
   d. Pay attention to check whether the EFI components are oxidized and whether the connection is reliable

Tools：

MST-500Pro diagnostic Speedometer	PT300EFI flashing diagnostic Speedometer（16PIN）	Multimeter	Tool	Torque Wrench
				

8. The driving conditions and maintenance conditions of each vehicle are different, so it is impossible to list all the fault phenomena and troubleshooting procedures one by one. Only some of the more common faults can be listed. Maintenance personnel themselves also need to have certain professional knowledge and experience accumulation process.

WARNING

●Do not turn on the flameout switch for a new car or a vehicle that is about to run out of fuel. Be sure to replenish enough fuel before turning it on, otherwise the fuel pump will be damaged if it runs dry without fuel.
●Do not insert or unplug the plugs of various parts at will, and it is forbidden to clean the plugs directly with water. After plugging and unplugging, be sure to check whether it is plugged back correctly.

Error code

Caution:

●Unlock the vehicle and turn on the flameout switch. When it is not started, the EFI fault light is always on as normal. If it is not on, the vehicle cannot be started.

●After starting the vehicle, if the fault light is on and the EFI failure is reported, it means that the EFI system is abnormal.

●When the EFI system reports a failure, continuing to drive the vehicle may cause damage. Please contact a qualified maintenance organization or our special maintenance point for troubleshooting in time.

1. M310 Read the fault code through the meter

When the engine is running, if the EFI failure indicator light " " is on, it indicates that there is a fault in the EFI component that needs to be rectified.

a. Turn the throttle to the maximum before energizing the whole vehicle, and keep it in the fully open position, then turn on the electric door lock and flameout switch. The system detects a fault and the fault light will start to flash.

b. The fault code has 4 digits. Read the fault code according to the number of flashes. For example: P0201 flashes in the following way: continuous flashing 10 times-intermittent 1 second-continuous flashing 2 times-intermittent 1 second-continuous flashing 10 times-intermittent 1 second- Flashes once in a row.

c. If there is more than one fault, the next fault code will flash after the fault light is off for 4 seconds. Therefore, after the fault light is off during the flashing process, waiting for more than 5 seconds and still no longer lights up, it means that the fault code has been flashed.

d. If you need to observe the blinking code again, you need to turn off the flameout switch first, then turn it on again, and keep the throttle fully open.

2. Read the fault code through the diagnostic tool

M125/310/155/150

Open the right storage box cover, insert the buckle with your fingernail or a thin flat-blade screwdriver, press in and pull out the buckles on both sides at the same time, then remove the right storage box cover(1).



Pull out the OBD plug, connect the diagnostic tool to read the fault code. Different batches of OBD plugs may have different colors. There are two colors, black and white, with the same function. If the OBD plug has a protective cover, remove it first.

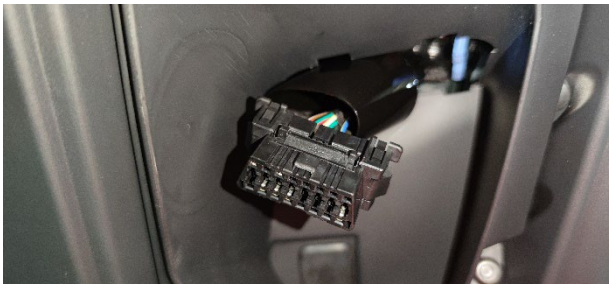

Note: M125 needs to use the diagnostic instrument of ISO15765-4 communication protocol (CAN diagnosis) to read the fault code, which cannot be read through the instrument.

M350/368/250/368(ETC)

Press the button indicated by the arrow to open the right storage box cover.



Press down the central cylinder of the expansion nail with 4 # hexagonal socket, and then take down the expansion nail. Pull out the cover plate. Note that the back of the cover plate is pasted with a non inductive antenna and cannot be pulled by force.



Pull out the OBD plug and connect the diagnostic instrument to read the fault code. Different batches of OBD plugs may have different colors, including black and white, with the same functions. If the OBD plug has a protective cover, remove it first.



3. Error code

M125/155/250/310/350/368

Code	Instruction	Code	Instruction
P0030	The heating control circuit of the upstream 1 cylinder oxygen sensor is open	PD116	Engine coolant temperature sensor signal is unreasonable
P0031	The upstream 1 cylinder oxygen sensor heating control circuit voltage is too low	P0117	Engine coolant temperature sensor circuit voltage is too low
P0032	The upstream 1 cylinder oxygen sensor heating control circuit voltage is too high	P0118	Engine coolant temperature sensor circuit voltage is too high
P0106	The intake pressure sensor/atmospheric pressure sensor is unreasonable	P0122	Throttle position sensor circuit voltage ultra-low limit
P0107	Intake pressure sensor is shorted to ground	P0123	Throttle position sensor circuit voltage limit
P0108	The intake air pressure sensor is shorted to the power supply	P0130	The signal of the upstream 1 cylinder oxygen sensor is unreasonable
P0112	Intake air temperature sensor signal voltage is too low	P0131	The signal of the upstream 1 cylinder oxygen sensor is too low
P0113	Intake air temperature sensor signal voltage is too high	P0132	The signal circuit voltage of the upstream 1 cylinder oxygen sensor is too high
P0134	Upstream 1 cylinder oxygen sensor circuit signal failure	P0627	Oil pump relay control circuit is open
P0201	1 cylinder injector control circuit is open	P0629	The oil pump relay control circuit is shorted to the power supply
P0261	1 cylinder injector control circuit is shorted to ground	P0650	MIL lamp driver stage circuit failure
P0262	The 1 cylinder injector control circuit is shorted to the power supply	P0444	Canister solenoid valve open
P0322	No speed sensor pulse signal (open circuit or short circuit)	P0459	Canister solenoid valve is shorted to the power supply
P0480	Fan control circuit is open	P0458	Canister solenoid valve is shorted to ground
P0691	Fan control circuit is shorted to ground	P2300	1 cylinder ignition coil is shorted to ground
P0692	The fan control circuit is shorted to the power supply	P0628	The oil pump relay control circuit voltage is too low
P0511	Idle speed actuator control circuit is open	P1098	Dump sensor signal voltage is too low
P0563	System battery voltage is too high	P1099	Dump sensor signal voltage is too high

M368（ETC）

No.	Fault codes	Fault code description
1	P0571	Brake light signal circuit malfunction
2	P0116	Engine coolant temperature exceeds the reasonable threshold fault
3	P0118	Engine coolant temperature sensor circuit voltage too high
4	P0117	Engine coolant temperature sensor circuit voltage too low
5	U0073	CAN1 Busoff fault
6	P0121	Electronic throttle position sensor 1/2 signal unreasonable
7	P0123	Electronic throttle position sensor 1 signal circuit voltage too high
8	P0122	Electronic throttle position sensor 1 signal circuit voltage too low
9	P0223	Electronic throttle position sensor 2 signal circuit voltage too high
10	P0222	Electronic throttle position sensor 2 signal circuit voltage too low
11	P0420	Three-way catalytic converter oxygen storage capacity degradation
12	P0106	Intake pressure sensor above upper limit fault
13	P0106	Intake pressure sensor below lower limit fault
14	P0108	Intake manifold pressure sensor voltage too high malfunction
15	P0107	Intake manifold pressure sensor voltage too low malfunction
16	P0105	No change in signal from intake pressure sensor 1
17	P2106	Electronic throttle drive stage malfunction (open circuit)
18	P2106	Electronic throttle drive stage malfunction (open circuit)
19	P2106	Electronic throttle drive stage malfunction (open circuit)
20	P2106	Electronic throttle drive stage malfunction (open circuit)
21	P1568	Return spring check maximum malfunction
22	P1545	DVE position deviation malfunction
23	P1559	Throttle limp home position self-learning malfunction
24	P1545	DVE position deviation malfunction
25	P1545	DVE position deviation malfunction
26	P1579	Electronic throttle self-learning conditions not satisfied
27	P1564	System voltage does not Satisfy electronic throttle self-learning conditions
28	P1559	Throttle limp home position self-learning malfunction
29	P1565	Throttle mechanical lower stop point re-learning failure
30	P0262	No.1 cylinder injector control circuit voltage too high
31	P0261	No.1 cylinder injector control circuit voltage too low
32	P0201	No.1 cylinder injector control circuit open
33	P0322	Rotational speed sensor signal loss malfunction
34	P061A	Second Layer Torque Monitoring Malfunction
35	P1573	Monitoring Error Response Malfunction
36	P1574	Rear oxygen sensor heating control circuit voltage is too low
37	P0036	Open Rear Oxygen Sensor Heating Control Circuit
38	P0053	The internal resistance of the Bank1 front oxygen sensor heating is unreasonable
39	P0032	Bankl oxygen sensor I heater voltage too high malfunction
40	P0031	Bank1 oxygen sensor heater voltage too low malfunction
41	P0030	Bankl oxygen sensor heater signal control circuit open malfunction
42	P0351	Cylinder ignition coil control circuit open
43	P2301	Cylinder ignition coil control circuit voltage too high
44	P2300	Cylinder ignition coil control circuit voltage too low
45	P0111	Inlet temperature over-rationality threshold over-limit fault
46	P0113	Intake air temperature sensor circuit voltage too high malfunction
47	P0112	Intake air temperature sensor circuit voltage too low malfunction
48	P0114	Inlet temperature stuck fault
49	P0629	Oil pump relay control cirquit voltage too hioh
50	P0628	Oil Pump Relay Control Circuit Malfunction
51	P0627	Oil Pump Relay Control Circuit Malfunction
52	P2270	Bank1 Rear Oxygen Sensor Modification - Signal Continues to Be Strong
53	P2271	Bank1 Rear Oxygen Sensor Modification - Signal Continued Lean

54	P0133	The Bank1 oxygen sensor responds to both concentrated and dilute mixed gases with a delay
55	P0692	Fan Control Circuit Voltage Too High
56	P0691	Fan Control Circuit Voltage Too Low
57	P0480	Cooling fan Control Circuit Open
58	P0138	Rear oxygen sensor signal line short to power supply
59	P0137	Rear oxygen sensor signal line short to ground
60	P2232	Rear oxygen sensor signal line coupled to heating line
61	P0136	Rear oxygen sensor signal open
62	P0132	Bankl Oxygen Sensor Signal Voltage Too High Malfunction
63	P0131	Bank1 Oxygen Sensor Signal Voltage Too Low Malfunction
64	P0130	Bank1 oxygen sensor signal voltage low fault
65	P0134	Bank1 Oxygen Sensor Signal Circuit Open Malfunction
66	P0301	Misfire fault
67	P1530	Electronic Control Unit (ECU) Fault Causing Irreversible Injection Cutoff (ICO)
68	P1531	AD converter given voltage test monitoring fault
69	P060D	Second Layer Throttle Pedal Signal Rationality Malfunction
70	P061C	Second Layer Engine Speed Monitoring Malfunction
71	P1527	First Layer Safety Fuel Cut-off Monitoring Malfunction
72	P1528	Second Layer Safety Fuel Cut-off Monitoring Malfunction
73	P1530	Electronic Control Unit (ECU) Fault Causing Irreversible Injection Cutoff (ICO)
74	P061A	Second Layer Torque Monitoring Malfunction
75	P1573	Monitoring Error Response Malfunction
76	P1574	Errorpin is activated and monitoring communication is normal
77	P2123	Electronic Throttle Pedal Position Sensor 1 Signal Voltage Too High
78	P2128	Electronic Throttle Pedal Position Sensor 2 Signal Voltage Too High
79	P2122	Electronic Throttle Pedal Position Sensor 1 Signal Voltage Too Low
80	P2127	Electronic Throttle Pedal Position Sensor 2 Signal Voltage Too Low
81	P0651	5V Power Supply Module 2 Malfunction Occurred
82	P2138	Electronic Throttle Pedal Position Sensor Signal Unreasonable
83	P0459	Charcoal Canister Control Valve Control Circuit Voltage Too High
84	P0458	Charcoal Canister Control Valve Control Circuit Voltage Too Low
85	P0444	Charcoal Canister Control Valve Control Circuit Open
86	P0119	Engine temperature rationality fault
87	P0563	System Battery Voltage Too High
88	P0501	Speed signal failure
89	P06B8	Read/Write NVM Block Error Occurred
90	P06B8	Read/Write NVM Block Error Occurred

4. Clear fault code

After troubleshooting the EFI, it needs to be cleared manually or through a diagnostic tool. M310 can be cleared manually, M125 need to use the ISO15765-4 communication protocol (CAN diagnosis) diagnostic instrument to clear.

4.1 M310 manually clear

a. Unlock the vehicle

b. Turn off the flame switch to "";

c. Start the vehicle, refuel in neutral gear to more than 4000 rpm and hold for 10 seconds;

d. Release the throttle, turn the flameout switch to "", and be careful not to power off the whole vehicle, and wait for more than 10 seconds;

e. After repeating the above three steps for 4 times, the fault light goes out.

4.2 Use the diagnostic tool to clear

The steps of different brands or models may be different, so please refer to the description of the diagnostic Speedometer manual to clear the fault code.



●When the engine is running, the fault light does not turn on, and the fault light flashes after the engine is turned off, it is a historical fault, which will not affect the performance and life of the whole vehicle, and will automatically disappear later.

EFI parts layout

1	2	3	4	5	6
Dump switch	OBD diagnostic interface (main cable)	Fuel pump（M150/310）	Carbon canister solenoid valve	Relay(KH-1A4T-R/noramally open)	Fuel injector (M310/350/368)
					
7	8	9	10	11	12
Ignition coils（M150/310）	Throttle valve body (M310)	Water and oil shared sensor	Oxygen Sensor (M310)	MSE6.0 ECU (M310)	Crankshaft position sensor (M310)
					
13	14	15	16	17	18
Oxygen Sensor (M125)	Fuel injector (M125/150/155)	Ignition coils (M125)	External intake pressure sensor (M125)	Throttle Body Assembly (M125)	Crankshaft position sensor (M125)
					

19	20	21	22	23	24
Air filter intake air temperature sensor (M125)	MSE8.0 ECU (M125/155)	Fuel pump（M350/368）	Oxygen Sensor（M150/350）	Ignition coil body（M350/368）	EFI high voltage line（M350/368）
					
25	26	27	28	29	30
External intake pressure senso（M150/350/368）	Throttle valve body (M350/368)	Crankshaft position sensor (M350/368)	ECU（M350/368）	Air filter intake air temperature sensor（M350/368）	Throttle Body Assembly（M155）

					
31	32	33	34	35	36
Crankshaft position sensor (M155)	Oxygen Sensor （M150/368）	Start relay （M150）	Relay（G8HN-1C4T-RJ/normally close）	Throttle Body Assembly （M368 ETC）	ECU （M368 ETC）
					
37					
Air Filter Intake Temperature Sensor					
					

Fault diagnosis and elimination of EFI parts

Caution:

●Once the EFI components are disassembled, the EFI system needs to be reset. For details, see the service information in this chapter.

●Fuel pumps, three-in-one sensors, stepping motors, ECUs, etc. are precision parts, such as unauthorized disassembly may cause damage, and it is not within the scope of the three guarantees for human reasons.

●After disassembling the throttle valve body, apply lint-free cloth or textured paper to seal the air filter outlet and intake manifold to prevent foreign matter from entering.

1. Dump switch

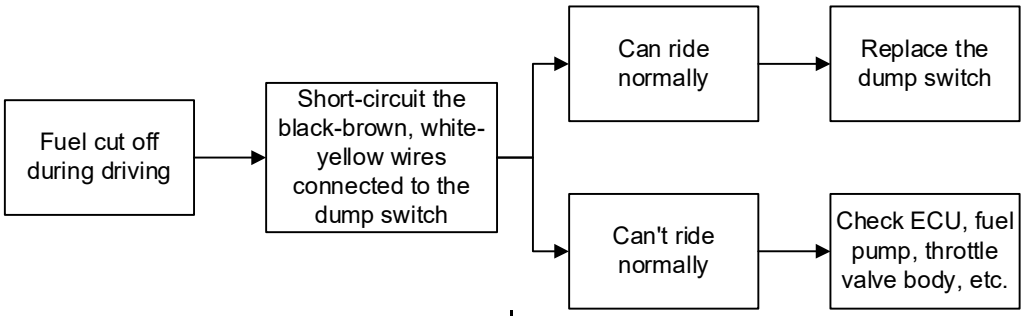

2. OBD port

The main cable has its own OBD interface, and the location is shown in the previous section to read the fault code through the diagnostic Speedometer. Use the diagnostic tool through the diagnostic interface to read historical fault codes, current fault codes, clear fault codes and read ECU status.

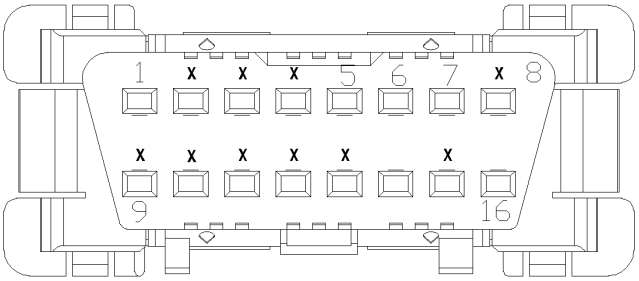

The picture above shows the cable end connector

No.	1	5	6	7	14	16
Color	Blue/yellow	green	yellow/white	brown/white	green/black	Red

3. Fuel pump

Caution:

●The fuel pump is a precision component that needs to be assembled in a dust-free workshop and requires rigorous testing, so it is forbidden to disassemble it by yourself.

●The engine of this vehicle is designed with a high compression ratio. It is recommended to add 95# and above unleaded gasoline for a long time. In order to extend the service life of the vehicle, please be sure to go to a regular gas station to refuel.

●It is forbidden to run the fuel pump in dry state or in water, otherwise its service life will be shortened, and it will be directly damaged in severe cases. The positive and negative wires of the fuel pump cannot be connected in reverse. It is forbidden to disassemble the fuel inlet filter, which may cause foreign matter to enter the fuel pump or block the fuel injector.

●The disassembly of the fuel pump or high-pressure fuel pipe should be carried out in a well-ventilated, dust-free or dust-less environment; dangerous operations such as fireworks or mobile phones should be strictly prohibited in the disassembly site.

When it is difficult to start the engine or start without dust; the engine is not working well, the operation is unstable, etc.; the fuel injector does not inject fuel; the engine is running weak and the acceleration performance is deteriorated. It is necessary to check whether the fuel pump is abnormal.

Refer to the steps of "Maintenance-Fuel Pipe-Replacement of High-pressure Fuel Pipe" in this manual to remove the surrounding bottom plate and high-pressure fuel pipe. Refer to the section "Maintenance-Fuel Pipe-Fuel Pump" to measure fuel pressure with a fuel pressure gauge, or use a simple test method to test whether the fuel pump is normal.

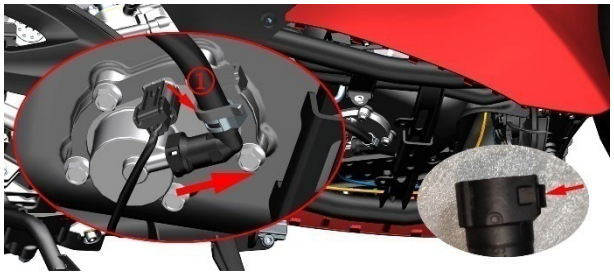

If the fuel pump needs to be removed from the vehicle, the fuel pump can be used to drain the fuel in the fuel tank. After lifting the vehicle, press the plug buckle as shown in the figure to pull out the cable. The ETC model uses 8# sleeves, M368 2024 models before November 18, 2025 are 10# sleeves, after which they are 8# sleeves, and other displacements are 10# sleeves Remove 5 bolts from the bottom, and then remove the fuel pump after removing the high-pressure fuel pipe bracket. Be careful not to press the fuel outlet pipe shown in the red circle. Once damaged, you can only replace the entire fuel pump assembly.

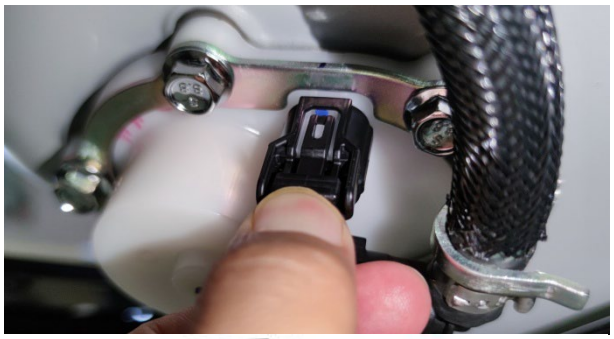

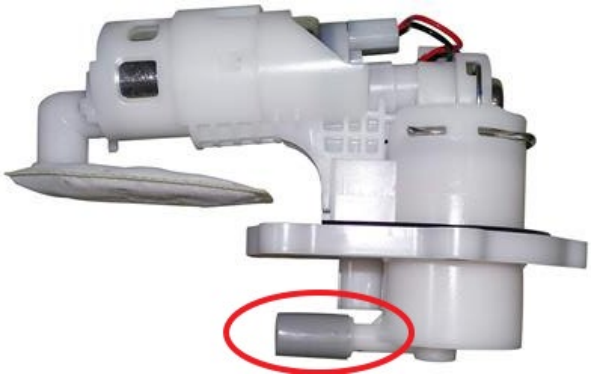

When reassembling, you need to pre-tighten diagonally and then tighten the 5 bolts. Otherwise, the uneven compression of the seal rubber ring of the fuel pump may cause leakage and cause safety hazards.

4. Carbon canister solenoid valve

When the engine performance is poor; the idle speed is poor; the air-fuel ratio is incorrect, the carbon canister solenoid valve should be checked.

Use a multimeter to measure the resistance between the two inserts of the canister solenoid valve plug should be 35±2Ω, otherwise it can be judged that the solenoid valve is faulty.



5. Relay（KH-1A4T-R/normally open）

M310 folding rear storage box: there are two PVC sheaths at the battery, each sheathing encloses four relays, a total of eight relays (starting auxiliary, light, oil pump, main relay, front motor, rear motor, cooling fan, rear box starting). M310 integrated rear compartment: there are 4 relays (starting auxiliary, light, oil pump, main relay) near the ECU on the right side of the vehicle, and 2 relays (front motor, cooling fan) on the left rear side.M350 has 5 relays (starting auxiliary, lighting, oil pump, main relay and cooling fan) at the relay bracket on the left side of the front riser of the head.M155 has 4 pcs relays(starting auxiliary, lighting, oil pump, main relay) on the right side near the ECU

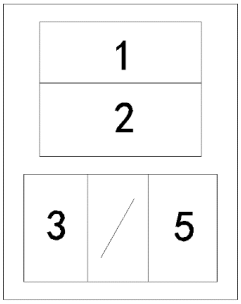



Cable end Relay

3 and 5 are normally closed contacts, which can be tested with a multimeter buzzer. 1 and 2 are normally open contacts. Otherwise, it can be judged as a relay failure.

The following cable end colors are for reference and the actual vehicle shall prevail. Different batches of thread colors may vary, but the function is the same.

Cable end wire color：

Wire no. Relay	1	2	3	5
light	Red	Blue/white	Black and white	White
Start assist	green	Green red	Black/ white	Red green
Oil pump	White/ black	Red/black	White/ black	Green/yellow
Main relay	Red	White/ black	Black/ white	Orange black
Front motor	green	Light green	black	White
Rear motor	green	Light green	black	White
cooling fan	green	Green/ white	black	Green blue
Rear box start	green	Light green	White	Black/white

6. Fuel injector

When the engine is unstable and weak, and the power performance is poor, check whether the injector is normal.

Need to remove the cushion and storage box first.

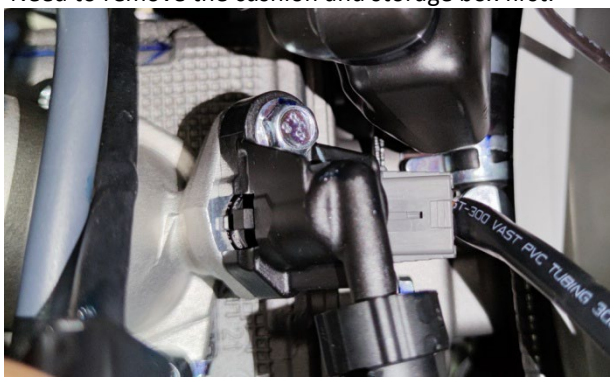

Can be judged by the following methods：

a. Park the vehicle firmly, start the engine, and let the engine run at idle speed. Use the auscultation needle or stethoscope to listen to the working sound of the cylinder. You should be able to hear the rhythmic working sound of the injector. If the sound is clear and even, it works normally. If the sound is low or cannot be heard, the injector needs to be removed for troubleshooting. Or the engine stalls when the injector plug is unplugged, indicating that the injector is normal.



b. Pull out the plug after pressing the anti-trip lock.

When the vehicle's malfunction indicator light comes on and reports fault codes such as 0262, 0261, 0201, etc., the following inspection methods should be followed.

1. Check whether the appearance of the injector has been impacted by external force, cracked, or whether the plug is loose or fallen out. After the inspection is correct, unplug the injector plug in the shutdown state and check whether the injector pins are skewed or missing.

2. Turn off the vehicle, unplug the injector plug, and measure the resistance between the two pins. As shown in the figure, at 20°C, the normal resistance is 12.5±0.6Ω. If the resistance measurement is infinite, it indicates that the sensor is open-circuited (fault code 0201) and needs to be replaced.

3. After checking that the resistance is correct, if the fault still exists, please unplug and re-plug the vehicle's main relay to ensure that the relay pins are not corroded or fallen off. Then use the diagnostic tool to clear the fault code. If the fault still exists, please use a multimeter to check whether the brown wire of the injector cable plug is connected to one end of the brown wire of the ECU cable plug, and ensure that the corresponding ECU pins are not missing, skewed, or other defects.

4. If the above inspections do not meet the standards, this part needs to be replaced. Otherwise, please check whether the cable connecting the sensor is damaged or broken.



If you need to replace the fuel injector, wait until the engine and muffler have cooled down. After placing the oil container at the bottom, refer to the steps for removing the high-pressure oil pipe to pull out the high-pressure oil pipe at the end of the fuel pump to discharge the remaining fuel. M368(ETC) model use a 8# sleeve,and others are use a 10# sleeve to remove the bolt(1), remove the injector holder(2), and then take off the injector(3).

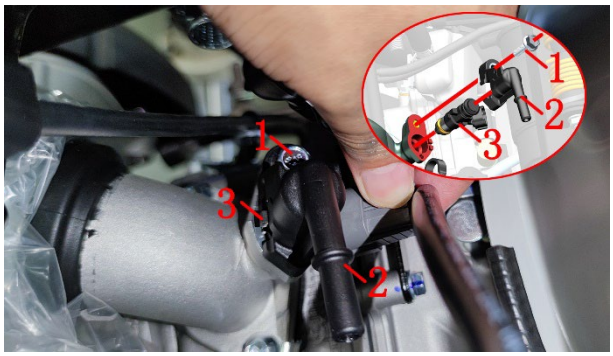

7. Ignition coils

There is no high-voltage spark; the high-voltage spark is weak; when the engine can not be started, check whether the ignition coil is normal. Common faults of general ignition coils such as short circuit, open circuit or grounding of the coil will cause no high voltage. In addition, the material of the ignition coil insulation layer is aging, the insulation performance is deteriorated, and the leakage of the ignition coil makes the electric spark weak and the ignition energy is insufficient. As a result, it causes unstable idling, intermittent flameout and inability to catch fire. When encountering this kind of failure, it is necessary to check whether the resistance and insulation performance of the ignition coil meet the requirements, if not, replace it.

Remove the spark plug from the engine and install it on the high-pressure cap according to the steps in the section "Maintenance-Spark plug-Removing the spark plug". Put away the side brackets, use the main bracket to park the vehicle firmly and unlock the vehicle, turn the flameout switch to "", hold the brake handle, and place the spark plug close to the engine cylinder head cover or box (should be far away from the spark plug mounting screw hole) about 6mm (0.24 in), press the start button. If a blue spark is found on the spark plug electrode, the ignition system is normal, otherwise it should be inspected by a qualified maintenance unit.

If you replace the ignition coil, follow the steps below:

a. Put down the lef rear pedal and M368(ETC) model use a T25 wrench, and others are using the 4# inner hexagon to remove the M6×14 bolt.

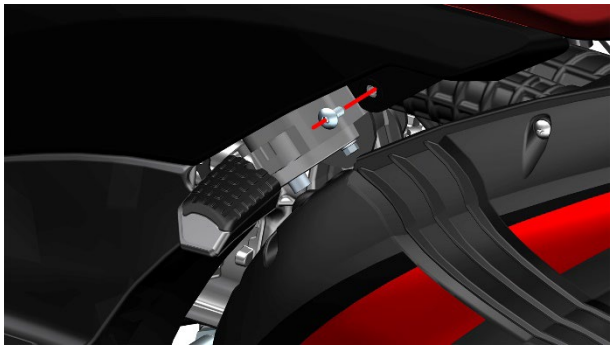

b. Pull out in sequence in the direction of the arrow (from the rear wheel to the front wheel). Note that there are 5 staples at the red circle and a circle of buckles around. Need to use a lot of force to pull out.

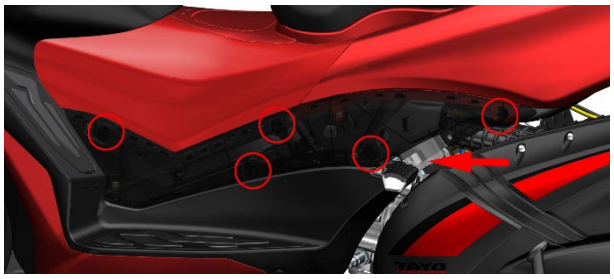

c. M368(ETC) model use a T25 wrench, and others are using 4# inner hexagon to remove 2 M6 bolts. Starting from the bottom where the left cover plate of the fuel tank and the tail skirt intersect, pull the left cover plate outward with one hand and press the front part of the tail skirt with the other hand; pull out the upper part of the left cover plate after pulling out the bottom. Then grasp the middle of the cover, press down the back of the cover and pull out the left cover at the same time.



d. Refer to the section "Maintenance-Removal of Spark Plug" to remove the left pedal. Steps are not repeated here.

e. ignition coil

M125/310/155/250

Unplug the ignition coil connector, pull out the high-pressure cap at the spark plug and use a Phillips screwdriver to remove the two M5×16 bolts(6), cut the cable tie(7) and then remove the ignition coil.

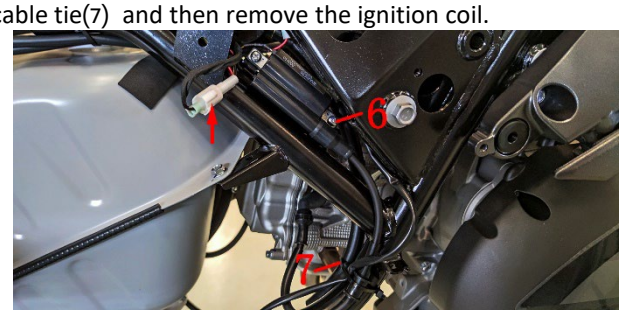

M350/368/368(ETC)

Refer to the previous 310 steps and disassemble it to the following figure.

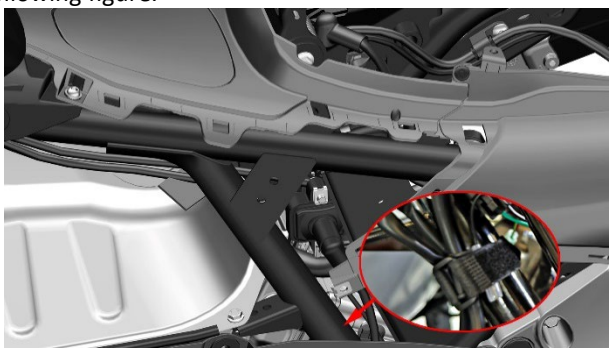

Remove the left cable tie and pull out the high pressure cap at the spark plug.

Hold the ignition coil body with one hand, and press the anti falling snap of the plug at the arrow with the other hand to pull out the plug. Since it is difficult to pull out the waterproof rubber plug in the plug, be careful not to break the plastic bracket.

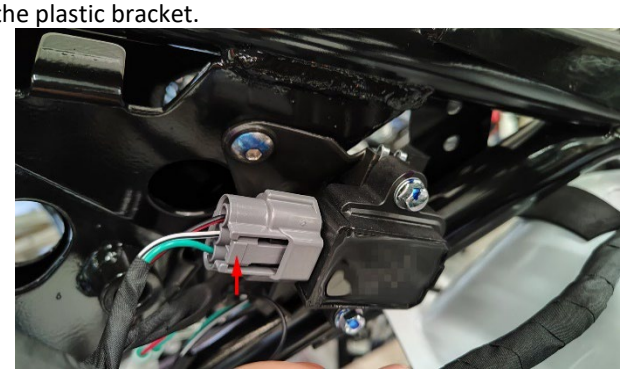

Remove M6×12 bolts with 4 # socket head, remove the ignition coil and bracket assembly from the vehicle. remove the two M6x22 bolts with an 8# sleeve, and then remove the ignition coil body and the high voltage wire assembly. Unplug the high voltage wire from the ignition coil body.

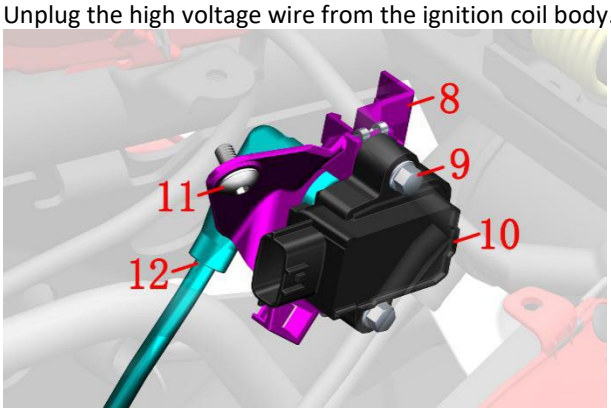

Troubleshooting of ZT350 Ignition Coil Body Fault

When the vehicle's malfunction indicator lamp lights up, reporting fault codes 0351, 2301, and 2300, and the vehicle is difficult to start, fails to start, stalls at idle when hot, and cannot reach high RPMs, the following inspection methods should be followed.

1. Check the appearance of the ignition coil body for external impact, cracking, and whether the plug is loose or has fallen out. After checking and confirming no issues, unplug the ignition coil plug with the vehicle turned off, and check whether the ignition coil pins are skewed or missing.

2. Turn off the vehicle, unplug the ignition coil plug, and measure the resistance between the pins. As shown in the figure, the normal resistance between 1 and 2 of the ignition coil is 0.8±0.2Ω, the resistance between 1 and 3 is infinite, and the resistance between 2 and 3 is infinite. Remember to reconnect the plug after the inspection.

3. If the above troubleshooting does not meet the standards, this part needs to be replaced; otherwise, please check whether the cables connecting the sensors are damaged or broken.



Troubleshooting of EFI High Voltage Wire Faults

Fault Phenomenon: When the instrument water temperature is ≥ 3 grids, unstable idle speed, idle stall, stalling when pulling in the clutch during riding, inability to reach high RPM, and difficulty starting or failure to start the vehicle may occur, requiring inspection of the EFI high voltage wire.

1. In a relatively dark place, fix a metal rod on the high voltage cap (do not touch it with your hand), start the vehicle and let it idle, wait until the instrument water temperature is ≥ 4 grids, observe whether there is an electric arc striking the metal rod on the high voltage cap at the connection with the spark plug. If there is a leakage, a new high voltage wire needs to be replaced.

2. With the vehicle turned off, unplug the high voltage wire, check whether there are signs of squeezing, obvious cracks on the surface of the high voltage wire, whether the connections with the ignition coil and spark plug are loose or detached, and check whether there are signs of water ingress, corrosion, rust, etc. on the metal connector of the high voltage wire.

3. Measure the resistance between the two ends of the high voltage wire, as shown in the figure below. The resistance between the two ends of a normal high voltage wire is 11 ± 1 KΩ.

4. If the above troubleshooting does not meet the standards, this part needs to be replaced.



8. Throttle valve body

8.1 Common failure phenomena

1. The engine is easy to stall when the vehicle is running, and it is difficult to start, especially cold starting.
2. Idle speed is unstable or no idle speed, and there is intermittent jitter when accelerating.
3. Insufficient power, poor acceleration performance and unstable operation.

8.2 Disassembly

Please refer to the description in "Maintenance-Throttle Valve Body" in this manual for detailed steps of disassembling and assembling the throttle body, three-in-one sensor and stepper motor.

8.3Troubleshooting process

Mechanical throttle body

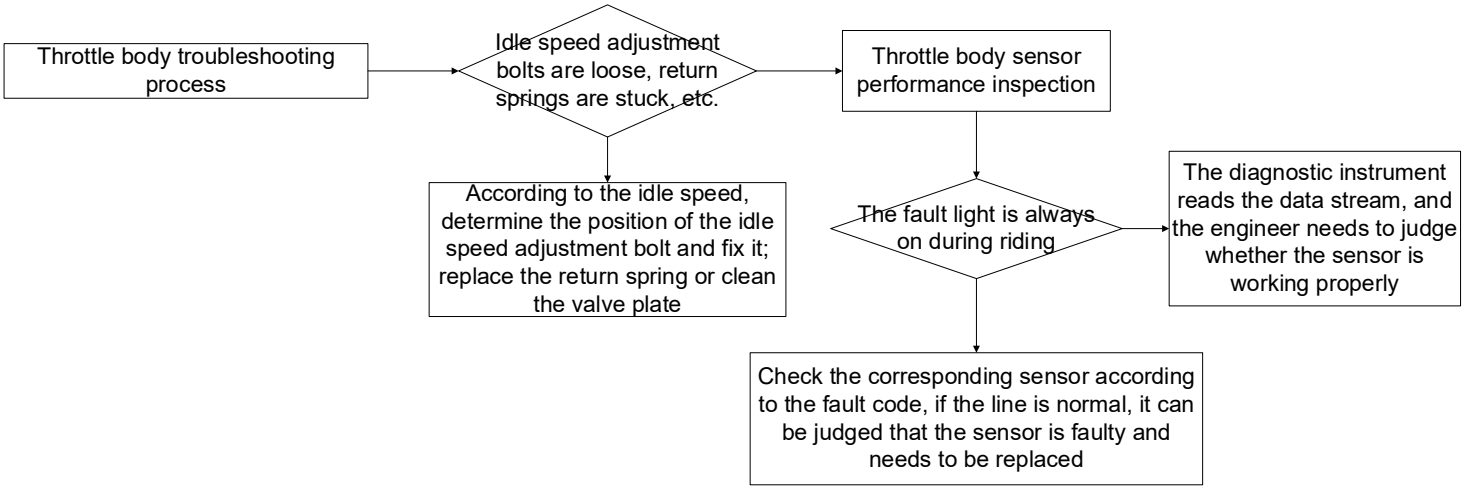

Electronic Throttle Body

When the vehicle's malfunction indicator lamp lights up and any of the fault codes 2106, 0121, 0122, 0123, 0222, 0223 is reported, the following steps should be taken for inspection:

1. Check the appearance of the throttle motor module for any signs of external impact, cracking, and whether the plug is loose or has fallen out. After confirming that there are no issues, unplug the throttle motor plug with the vehicle turned off, and check whether the sensor pins are skewed or missing.

2. After confirming that there are no abnormalities in the above steps, remove the throttle body and unplug the motor plug. If the vehicle reports fault codes 0121 or 0123, measure the resistance between pins 1 and 6, which should be 49±5Ω; if the vehicle reports fault codes 0222 or 0223, measure the resistance between pins 4 and 6, both of which should be 51±5Ω. If the vehicle reports fault code 2106, measure the resistance between pins 3 and 5, which should be approximately 3.5±1Ω. If the resistance does not meet the standard, the throttle body needs to be replaced (resistance is affected by the current temperature, and some deviation is normal). Remember to reconnect the plug after the inspection.

3. For those with a diagnostic instrument, connect to the OBD port for troubleshooting. Turn off the ignition switch without starting the engine, use the diagnostic tool to read the engine parameters for judgment, select the EFI system that matches the current vehicle model to enter, and increase the throttle from idle to full open. The normal data should be: the voltage signal of the first throttle circuit will increase from 0.5±0.2V to 4.65±0.2V; the voltage signal of the second throttle circuit will increase from 4.5±0.2V to 0.35±0.2V. If the data does not meet the standard, perform the inspection as described above.

4. If the above troubleshooting does not meet the standard, this part needs to be replaced. If the measurement is normal, check whether the cables connecting the sensor are damaged or broken.

Possible situations when the sensor malfunctions in addition to the malfunction indicator lamp lighting up:

1. High idle speed. At this time, check whether the four fixing bolts of the throttle body are tightened.

2. Unstable idle speed, with the engine speed fluctuating. At this time, connect the diagnostic tool and check that the voltage fluctuation of the throttle signal should not exceed 0.08V, and the throttle opening fluctuation should not exceed 0.5%.

If any of the above abnormalities are found, the throttle body needs to be replaced.

PIN ASSI GNMENT			
1	IPIS	$Signal_1$	TPS 1
2	UIP	Sensor Power Supply	TPS+
3	M+	Motor Positive Terminal	MOTOR+
4	IP2S	$Signal_2$	TPS 2
5	M-	Motor Negative Terminal	MOTOR-
6	IPM	Sensor Grounding	TPS-

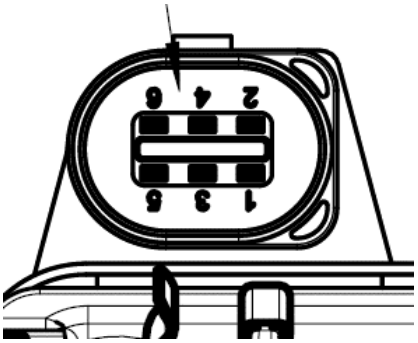

8.4 Sensor

M310 Three-in-one sensor



The fault code can be read through the diagnostic tool to confirm whether the three-in-one sensor is faulty.

For details on the disassembly and assembly of the three-in-one sensor, please refer to the description in "Maintenance-Throttle Valve Body- Disassembly of the Three-in-One Sensor".

The resistance of the two terminals T and G can be measured to determine whether it is abnormal. The resistance value at 25°C (77F) is 1940～2040Ω.

M125/350/368/250/150/155 sensor

For the disassembly, assembly and inspection of the throttle valve body position sensor and the external intake pressure sensor, please refer to the previous section on the throttle valve body.

Air filter intake air temperature sensor



Remove the temperature sensor from the air filter and place it in the ambient temperature 20℃（68F）～30℃（86）, and use a multimeter to check whether the resistance of the two pins is between 2726～1770 Ω.

External intake air pressure sensor of M368 (ETC)



When the vehicle's malfunction indicator light comes on, reporting fault codes 0106, 0107, 0108, and the vehicle is difficult to start or fails to start, the following inspection methods should be followed:

1. Check whether the appearance of the pressure sensor has been impacted by external force, cracked, and whether the plug is loose or fallen out. After checking and confirming no issues, unplug the pressure sensor plug with the vehicle turned off, and check whether the pins of the pressure sensor are skewed or missing.

2. Turn off the vehicle, unplug the pressure sensor plug, and measure the resistance between the sensor pins. As shown in the figure, the resistance between pins 1 and 2 of a normal pressure sensor is 210±50Ω, the resistance between pins 1 and 3 is 260±50Ω, and the resistance between pins 2 and 3 is 60±25Ω. Remember to reconnect the plug after the inspection.

3. Turn on the vehicle, turn on the engine stop switch without ignition, use a diagnostic tool to read the engine parameters for judgment, select the EFI system that matches the current vehicle model to enter, and check the current intake manifold pressure parameter. Under normal circumstances, the parameter is approximately equal to the local atmospheric pressure. Then start the engine by ignition. After the water temperature reaches 80°C, the manifold pressure is 38~44kpa. (The idle pressure of a new vehicle will be higher than this value and will decrease after running-in). If the idle intake pressure of the vehicle after running-in is greater than 44kpa, check whether the cylinder head is leaking.

4. If the above inspections do not meet the standards, replace this part; otherwise, check whether the cables connecting the sensor are damaged or broken.

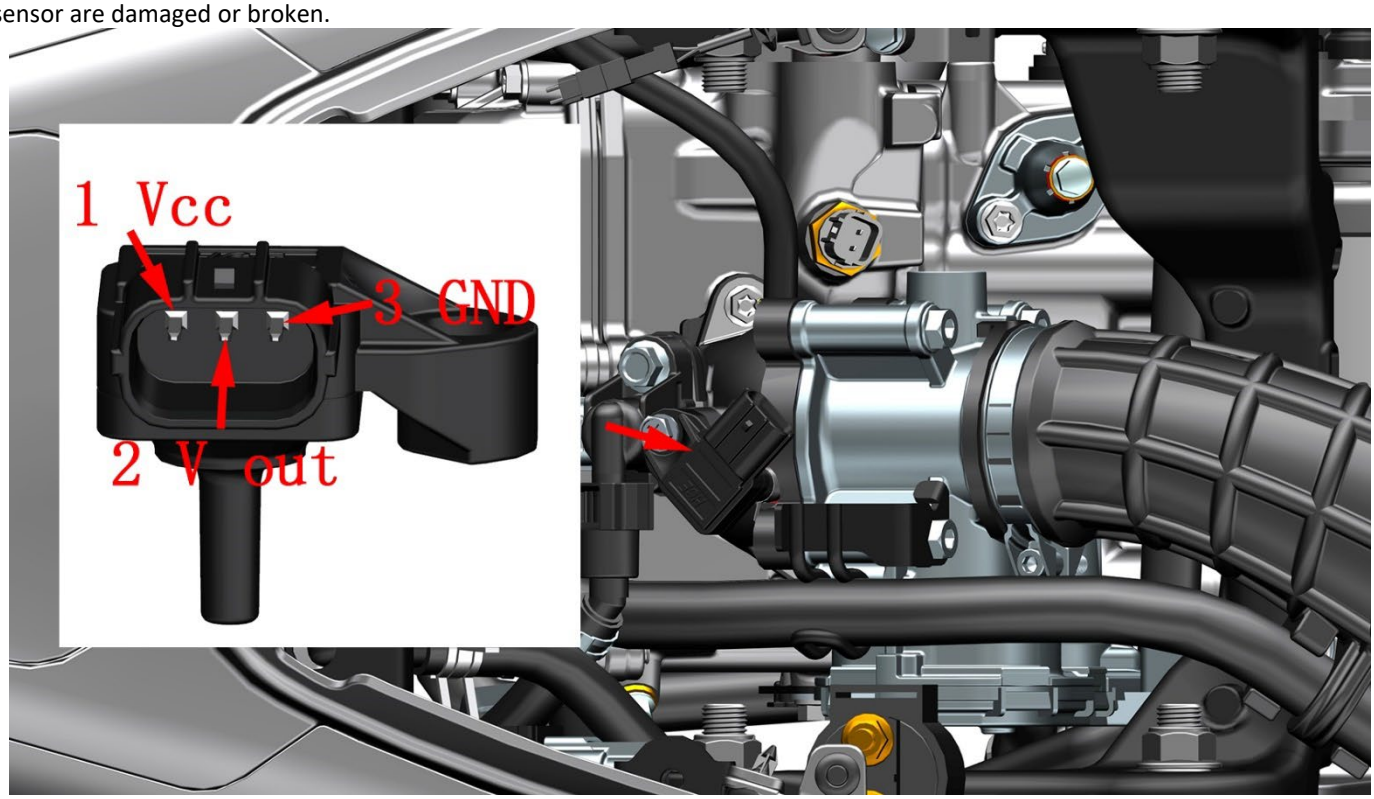

9. Water and oil shared sensor



When the engine is difficult to start, the idling speed is unstable, the engine performance is poor, and the engine is easy to stall, check whether the sensor is abnormal. The fault code can be read through the diagnostic Speedometer to confirm whether the water and oil shared sensor is faulty.

First, remove the storage box by referring to the steps for dismantling the storage box. Refer to the steps for removing the throttle valve body to remove the throttle valve body to facilitate the removal of the water and oil shared sensor. M310/350/368/250 located on the right side of the intake manifold.M125/150/155 under the thermostat on the right side of the vehicle. First pinch the top of the plug, press down the anti-dropping card, and then unplug the plug.

Due to limited space, it is recommended to use a 72-tooth 17# ratchet wrench to remove the water and oil shared sensor counterclockwise, and remove the 9×2 EPDM rubber O-ring. New O-rings need to be replaced during reassembly to avoid leakage.



Standard torque：13±1.5N.m (1.3±0.2 kgf.m,10±1 lbf. ft)

When the vehicle malfunction indicator light comes on and report's fault code 0116, the following inspection methods should be followed.

1. Check whether the appearance of the temperature sensor has been impacted by external force, cracked, or whether the plug is loose or fallen out. After the inspection is correct, unplug the temperature sensor plug in the shutdown state, and check whether the sensor pins are skewed or missing.

2. Turn off the vehicle, unplug the temperature sensor plug, and measure the resistance between the sensor pins. As shown in the figure, at 30°C, the resistance between the two pins of a normal temperature sensor is 1.74~1.89KΩ. The resistance table corresponding to different temperatures is on the right. The temperature measured by the water temperature sensor is equivalent to the engine coolant temperature. Remember to reconnect the plug after the inspection.

3. When fault code 0116 is reported, since it is an open circuit fault, the detected resistance will be infinite. In this case, replacement is required. Another situation is that the cable is damaged. At this time, the resistance is normal, but the fault code cannot be cleared, and it is necessary to check whether the cable is worn out.

4. If the above troubleshooting does not meet the standards, this part needs to be replaced. Otherwise, please check whether the cable connecting the sensor is damaged or broken.



Temperature °C	Resistance kΩ		
	MIN.	NOM.	MAX.
−30	23.4900	25.1600	26.9400
−25	18.1900	19.4300	20.7500
−20	14.2000	15.1300	16.1100
−15	11.1800	11.8700	12.6100
−10	8.8600	9.3910	9.9490
−5	7.0750	7.4800	7.9050
0	5.6870	5.9990	6.3260
5	4.6020	4.8430	5.0960
10	3.7470	3.9350	4.1310
15	3.0690	3.2160	3.3700
20	2.5280	2.6440	2.7650
25	2.0940	2.1860	2.2810
30	1.7430	1.8170	1.8920
35	1.4590	1.5180	1.5780
40	1.2270	1.2740	1.3220
45	1.0370	1.0750	1.1130
50	0.8798	0.9104	0.9417
55	0.7499	0.7748	0.8002
60	0.6419	0.6621	0.6828
65	0.5516	0.5682	0.5850
70	0.4759	0.4895	0.5032
75	0.4121	0.4232	0.4345
80	0.3581	0.3673	0.3766
85	0.3123	0.3199	0.3275
90	0.2733	0.2796	0.2859
95	0.2399	0.2451	0.2503
100	0.2113	0.2156	0.2199
105	0.1862	0.1902	0.1942
110	0.1646	0.1683	0.1721
115	0.1459	0.1494	0.1529
120	0.1297	0.1329	0.1362
125	0.1156	0.1186	0.1217
130	0.1033	0.1061	0.1090
135	0.0926	0.0952	0.0979
140	0.0832	0.0856	0.0881
145	0.0749	0.0771	0.0795
150	0.0676	0.0697	0.0719
155	0.0611	0.0631	0.0651
160	0.0554	0.0573	0.0591
165	0.0503	0.0521	0.0538
170	0.0458	0.0474	0.0491
175	0.0418	0.0433	0.0449
180	0.0382	0.0396	0.0411
185	0.0350	0.0363	0.0377
190	0.0321	0.0334	0.0346
195	0.0295	0.0307	0.0319
200	0.0272	0.0283	0.0294

10. Oxygen Sensor

WARNING

●The oxygen sensor must be removed after the engine and muffler have cooled down completely.

When there is poor engine performance, unstable idle speed, high fuel consumption, and incorrect air-fuel ratio, check the oxygen sensor. The fault code can be read through the diagnostic Speedometer to confirm whether the oxygen sensor is faulty.

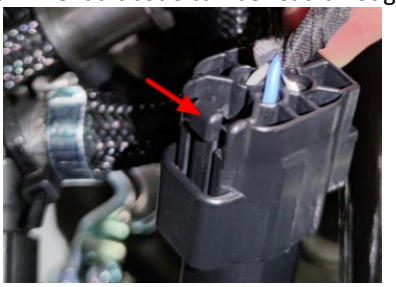

M310



M125

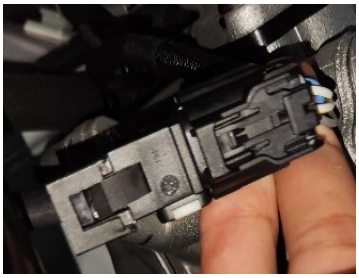

M350/368/250/368(ETC)

10.1 Check

First follow the steps of disassembling the glove box to remove the glove box and find the four-pin plug of the oxygen sensor. Pinch the top of the plug with two fingers, press the arrow indicating buckle, and then pull it out. The oxygen sensor of M350/368 is located at the front bend of the muffler.

When the vehicle malfunction indicator light comes on and reports fault codes 0030, 0131, 0132, 0134, the following inspection methods should be followed.

1. Check the appearance of the oxygen sensor for external impact, cracking, and whether the plug is loose or fallen out. After checking and confirming no issues, unplug the oxygen sensor plug with the vehicle turned off, and check whether the sensor pins are skewed or missing.

2. Turn off the vehicle, unplug the oxygen sensor plug, and measure the resistance between the corresponding pins of the two white wires. For a normal oxygen sensor, the resistance between the two pins is 9±2Ω. When the vehicle reports an oxygen sensor heating open circuit fault with fault codes 0131, 0030, the resistance will be infinite. Remember to reconnect the plug after the inspection.

3. When reporting an oxygen sensor circuit signal fault with fault code 0134, a diagnostic tool needs to be used to read the engine parameters for judgment. Turn on the vehicle, turn on the ignition switch, idle the engine, select the EFI system that matches the current vehicle model to enter, and check the voltage parameter of the cylinder 1 oxygen sensor. Under normal circumstances, the voltage will fluctuate between 0~1V. If the voltage remains unchanged for a long time, turn off the vehicle, remove the ECU plug, and check whether the ECU pins are skewed or missing. If there are any abnormalities, replacement is required. Then use a multimeter to check whether the gray wire and white-yellow wire of the oxygen sensor plug are connected to the corresponding pins of the gray wire and white-yellow wire of the ECU. If there is a disconnection, check whether the cable is damaged or broken.

4. If the above inspections do not meet the standards, this part needs to be replaced; otherwise, check whether the cable connecting the sensor is damaged or broken.

The ceramic inside the oxygen sensor is hard and brittle. Do not use hard objects to strike or strong gas to blow it, otherwise it is easy to cause damage.

Alternatively, remove the oxygen sensor and observe the color of the tip of the head. Normally, it is light gray. If it is white, it indicates silicon poisoning and damage, and replacement is required; if it is black, it indicates carbon deposits and can be cleaned and then continue to be used; if it is brownish-yellow, it indicates lead poisoning and replacement is required.

10.2 Replace

M310

First pull out the plug, use needle-nose pliers to remove the buckle (1) from the bracket, and then use a 22# open-end wrench to remove it counterclockwise. Install after cleaning the installation surface.

The thread of the new sensor is coated with a special paste-like thread anti-sintering agent to prevent air leakage and facilitate subsequent disassembly. If there is no problem after removing the old inspection, you need to apply a proper amount of anti-sintering agent to the thread before installation.

Torque standards：44N.m (4.5 kgf.m, 32 lbf. ft).

Oxygen sensor thread: M18×1.5.

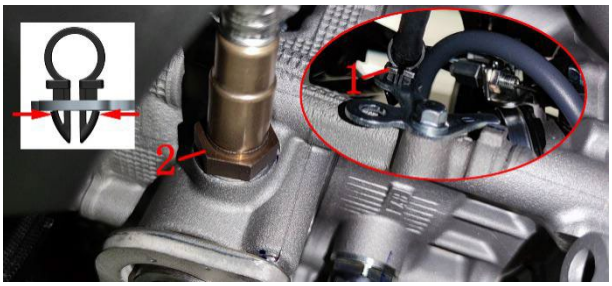



M125

After finding the oxygen sensor plug, first push the dark red buckle in the direction of the arrow, then hold the plug end of the oxygen sensor with one hand, press the buckle indicated by the arrow on the cable end with the other hand, and pull out the plug. Then use a 22# open-end wrench to remove it counterclockwise. Install after cleaning the installation surface.

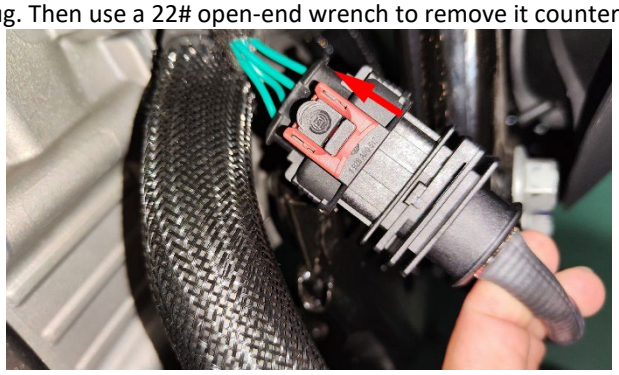



M350/368/250

a. Remove the M310 ignition coil as shown in the following figure. Remove the cable tie on the left side.

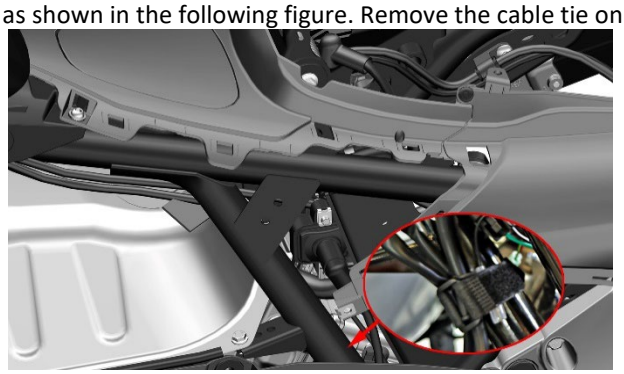

b. Remove the cable tie at the bottom.



c. Find the plug shown in the figure on the left side of the intake manifold, press the anti slip snap indicated by the arrow and pull out the plug. Use a 22 # open-end wrench to remove the oxygen sensor from the muffler anticlockwise.

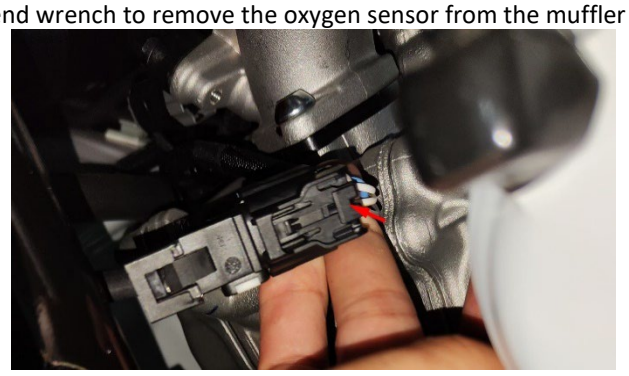

M155



11. ECU

M310/350/155/250

When the engine cannot be started and the performance is poor, check whether the ECU is normal. Because the ECU is more complicated and difficult to judge, the elimination method can generally be used to remove the ECU from a normal vehicle of the same model and replace it with a faulty vehicle.

Refer to the steps of "Maintenance-Rear Shock Absorption-Replacement Rear Shock Absorber" and remove the right tail skirt to expose the ECU.

The index finger and middle finger are respectively located under the lever. While pressing the buckle with the thumb, turn the index finger and middle finger to the thumb direction to pull out the ECU plug. Use 5# inner hexagon to remove the bolt(1) to take off the ECU(2).

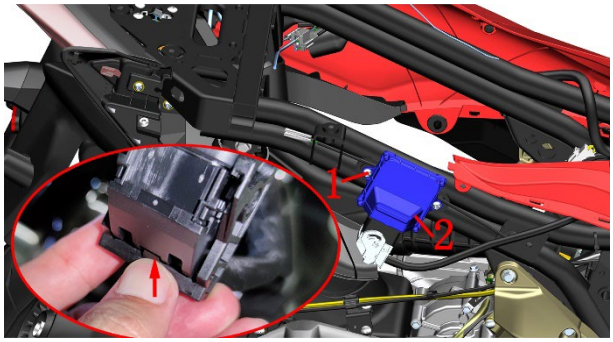

M125/155

The ECU can only be removed after removing the rear storage box, rear armrest and rear right rear skirt. Pull out the ECU plug after pressing the buckle indicated by the arrow. Remove 2 M6×12 bolts with 4# hexagon socket to remove the ECU.

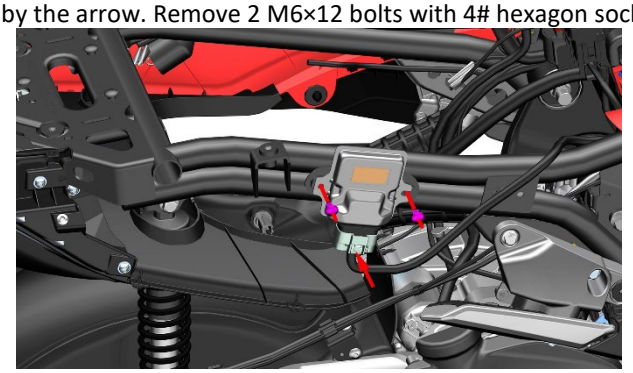

M368(ETC)

After unplugging, use an 8# socket to remove the 4 bolts and take out the ECU.

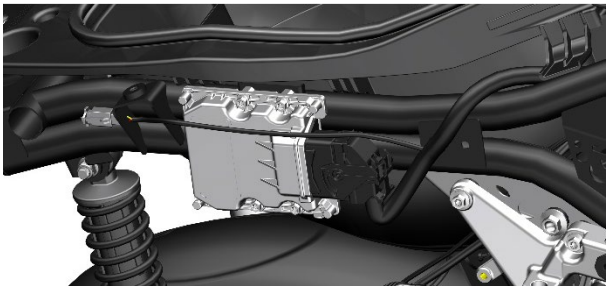

12. Crankshaft position sensor

When the engine starts without dust or is difficult to start; poor acceleration and unstable idling; when the engine is stalled intermittently, it is necessary to check whether the crankshaft position sensor is normal.

The crankshaft position sensor is installed on the right crankcase cover and integrated with the magneto stator. Locate the sensor plug on the right side of the vehicle, press the head anti-trip lock and pull it out. Use a multimeter to measure the resistance of the crankshaft position sensor① at 25°C (77F), M310/350/368/250/368(ETC) it should be 150±20Ω, M125/155 it shout be 280±20Ω, otherwise it should be replaced.

In addition, the three-hole plug of the stator② of the magneto uses a multimeter to measure the phase-to-phase resistance of any two terminals at 25°C (77F), which should be 0.7±0.15Ω.

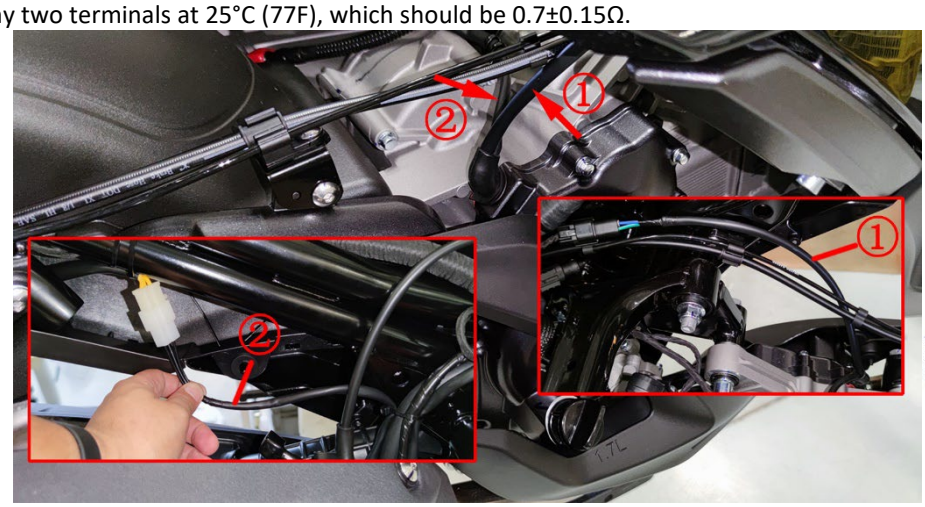



13. Starting relay (M155)

Rated voltage of starting relay: DC 12 V, operating temperature: -40 ~ + 85 ℃, operating voltage: DC4.6 ~ 7 V (20 ℃),Reset voltage DC 1.2 ~ 4.2 V (20 ℃), coil current 0.2A (12V 20 ℃) or less. Insulation resistance DC500V meg-ohmmeter above 20MΩ.

The detection method is as follows:

After pulling out the relay, use the buzzer gear of the multimeter to measure 87 a. The 30 pin should be normally closed. At this time, the buzzer of the multimeter sounds;Connect pins 30 and 87. The buzzer should not sound if it is normally open at this time.Connect pins 85 and 86 to the battery or DC12V power supply with wires, and measure whether the buzzer of pins 87 a and 30 does not sound;Measure the buzzer sound of pin 87 and 30, indicating that the relay is normal, otherwise, it is abnormal and needs to be replaced.



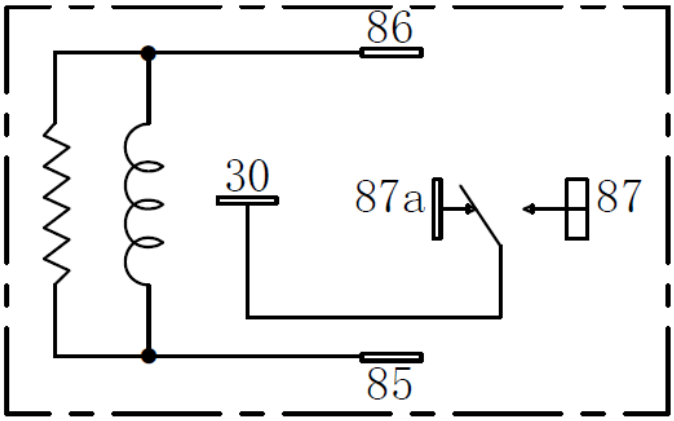

14. Relay (G8HN-1C4T-RJ) (M155)

Inside the PVC boot of the M150 rear left taillight plug are the side stand relay (model G8HN-1C4T-RJ) and the charging relay (model KH-1A4 T-R).。 The detection of charging relay is consistent with the model of EFI relay.

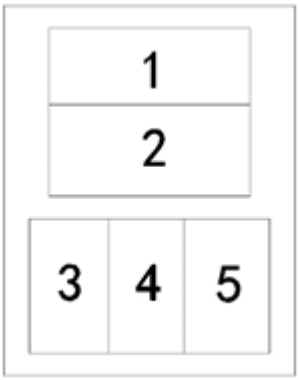

Cable end



relay

After pulling out the relay, use the buzzer gear of the multimeter to measure whether the pins 1 and 4 are normally closed. At this time, the buzzer of the multimeter will ring;2 and 4 are normally open contacts without sound. Pins 3 and 5 are energized, measurement pins 1 and 4 should be disconnected, and the relay is normal when pins 2 and 4 are connected. Otherwise, it can be judged as relay failure.

The following cable end colors are for reference, subject to the actual conditions of the vehicle. The line color of different batches may be different, but the function is the same. Cable terminal color:

Wire number / Relay	1	2	3	4	5
Side support relay	Green	-	Green/ red	Light green	Black/ white

15. Air Filter Intake Air Temperature Sensor

When the vehicle's malfunction indicator lamp lights up and reports fault codes 0112 and 0113, the following inspection methods should be followed:

1. Check whether the appearance of the intake air temperature sensor has been impacted by external force, cracked, and whether the plug is loose or fallen out. After the inspection is correct, unplug the intake air temperature sensor plug in the shutdown state, and check whether the sensor pins are skewed or missing.

2. Turn off the vehicle, unplug the intake air temperature sensor plug, and measure the resistance between the sensor pins. As shown in the figure, at 30°C, the resistance between the two pins of a normal temperature sensor is 1.55~1.77KΩ. The resistance table corresponding to different temperatures is on the right. Generally, the temperature of the sensor is equivalent to the ambient temperature. Remember to reconnect the plug after the inspection.

3. When fault codes 0112 and 0113 are reported, since it is an open-circuit fault, the detected resistance will be infinite. In this case, replacement is required. Another situation is that the cable is damaged. At this time, the resistance is normal, but the fault code cannot be cleared. It is necessary to check whether the cable is worn out. In addition, when fault code 0114 for temperature hysteresis is reported, it is necessary to use a diagnostic tool to flash the latest ECU program and clear the fault code.

4. If the above troubleshooting does not meet the standards, this part needs to be replaced. Otherwise, please check whether the cable connecting the sensor is damaged or broken.

5. Generally, customers may accidentally report faults due to plug disassembly and assembly during maintenance. Manual clearing or using a diagnostic tool to clear the fault code is sufficient.





Temperature °C	Resistance kΩ			B Constant
	MIN.	NOM.	MAX.	K
−30	29.7300	33.2500	37.1400	3561.2
−25	22.2200	24.7200	27.4900	3585.5
−20	16.7600	18.5700	20.5500	3610.2
−15	12.7600	14.0700	15.5100	3635.3
−10	9.7960	10.7600	11.8100	3655.2
−5	7.5850	8.2980	9.0700	3677.4
0	5.9200	6.4510	7.0240	3696.8
5	4.6560	5.0550	5.4830	3715.9
10	3.6890	3.9900	4.3120	3735.1
15	2.9430	3.1720	3.4170	3748.8
20	2.3640	2.5400	2.7260	3767.0
25	1.9110	2.0460	2.1890	3780.0
30	1.5550	1.6600	1.7700	3792.8
35	1.2730	1.3540	1.4400	3812.0
40	1.0480	1.1110	1.1780	3817.4
45	0.8671	0.9173	0.9696	3825.0
50	0.7216	0.7613	0.8024	3838.3
55	0.6036	0.6351	0.6677	3848.2
60	0.5075	0.5325	0.5584	3855.2
65	0.4287	0.4487	0.4693	3860.3
70	0.3638	0.3799	0.3963	3866.1
75	0.3101	0.3231	0.3362	3871.9
80	0.2655	0.2760	0.2866	3880.0
85	0.2283	0.2367	0.2453	3882.9
90	0.1971	0.2039	0.2108	3877.0
95	0.1708	0.1764	0.1819	3882.9
100	0.1486	0.1531	0.1576	3889.7
105	0.1292	0.1334	0.1376	3881.5
110	0.1128	0.1167	0.1206	3881.8
115	0.0988	0.1024	0.1060	3880.0
120	0.0868	0.0902	0.0935	3873.1
125	0.0766	0.0797	0.0828	3883.2
130	0.0677	0.0706	0.0735	3872.7
135	0.0601	0.0628	0.0655	3858.9
140	0.0535	0.0560	0.0585	3856.0
145	0.0478	0.0501	0.0524	3862.1
150	0.0428	0.0449	0.0471	3852.6

The engine cannot start and there is no sign of fault diagnosis process

When the start button is pressed and the starter motor can drive the engine to run normally, but the engine does not work normally, and there is no sign of the car, you can refer to the following diagnosis process to troubleshoot the cause of the fault.

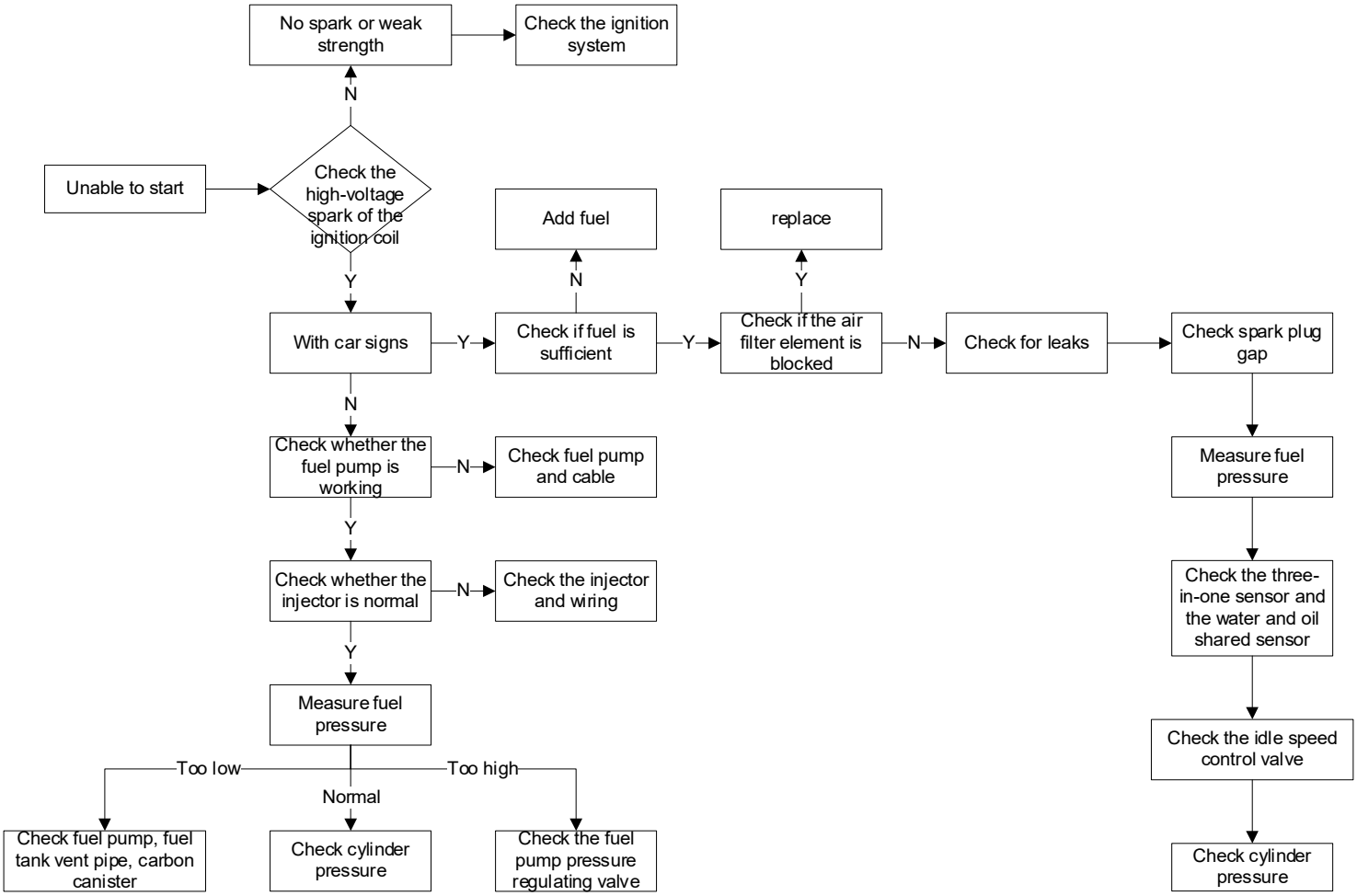

The engine cannot be started and there is a car symptom fault diagnosis process

When the start button is pressed, the starter motor can drive the engine to run normally. When there are signs of a car but cannot start, you can refer to the following diagnosis process to troubleshoot the cause of the fault.

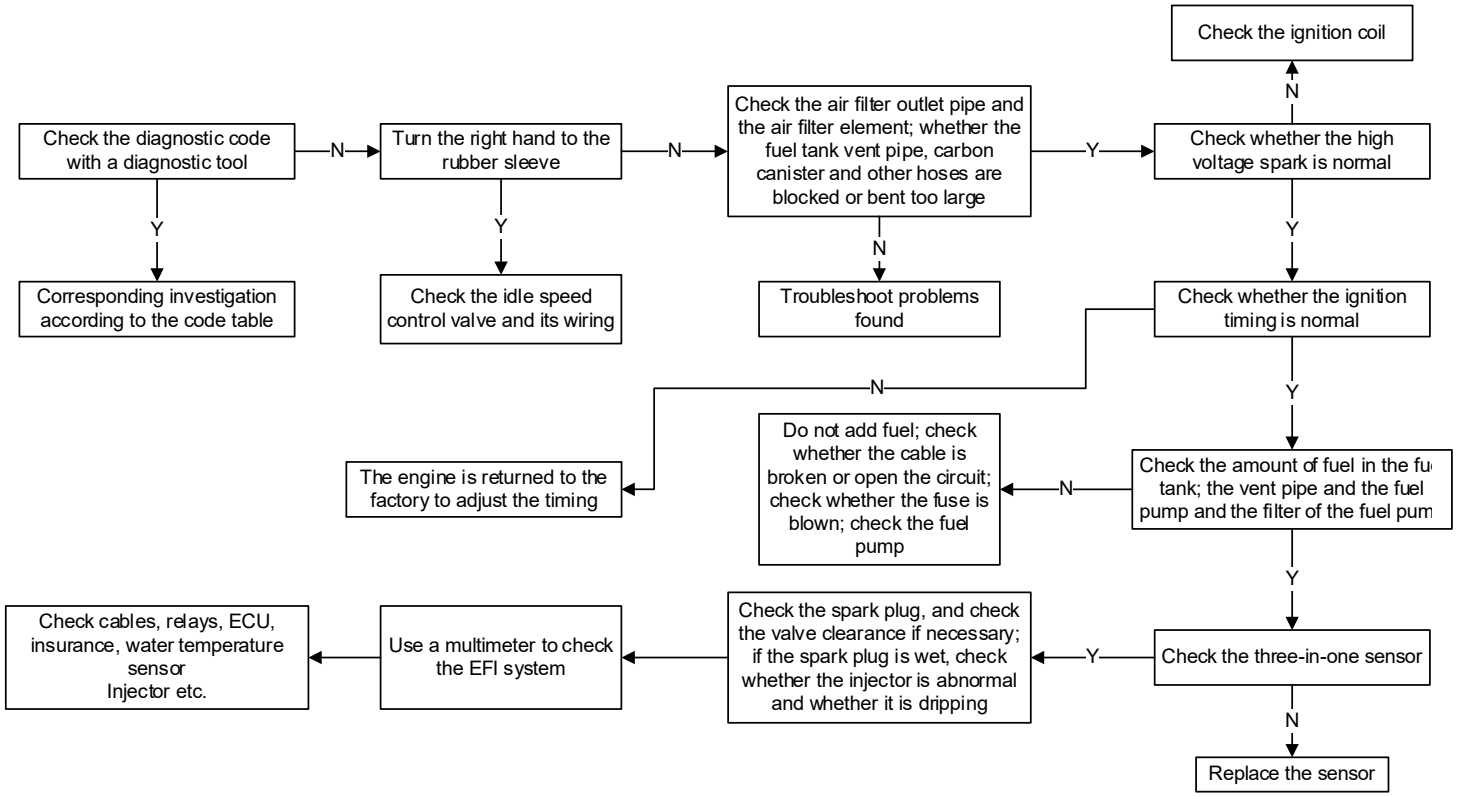

Poor acceleration

Rotate the rubber sleeve with the right hand. The engine speed cannot increase immediately, and there is hysteresis, and the acceleration is slow; you can refer to the following diagnosis process to troubleshoot the cause of the fault.

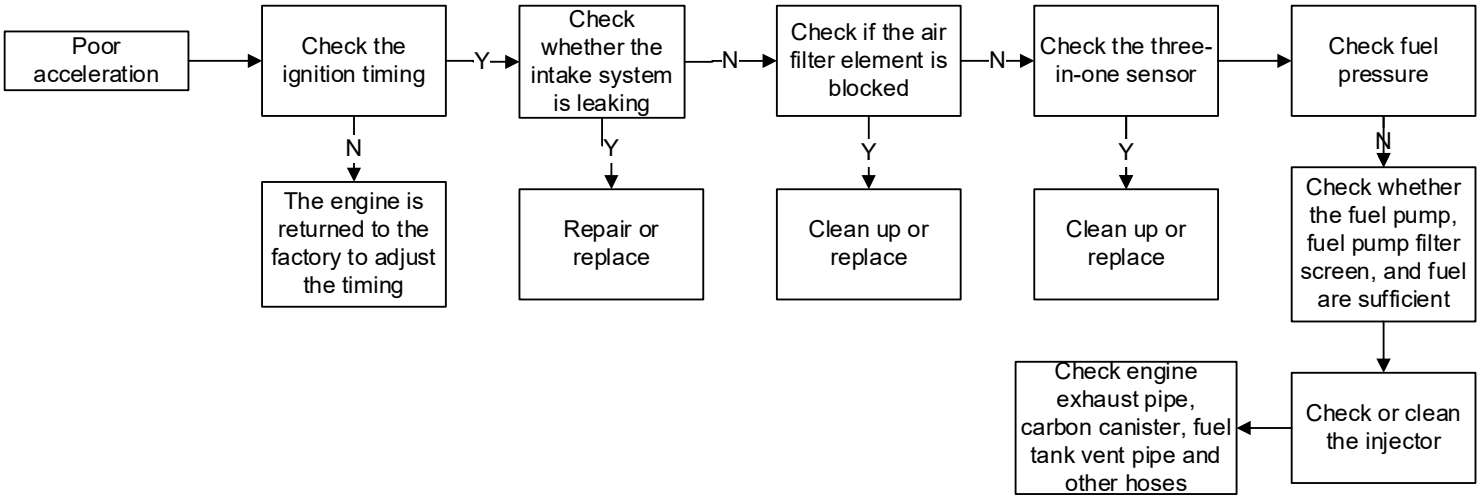

High idling speed of hot car

When a cold car occurs, it can run at a normal fast idling speed. After a hot car, the idling speed does not fall back to M310/350/368/368(ETC) are should be 1500-1700 rpm, and M125/155/150 are should be 1400-1600 rpm. You can refer to the following diagnosis process to troubleshoot the cause of the fault.

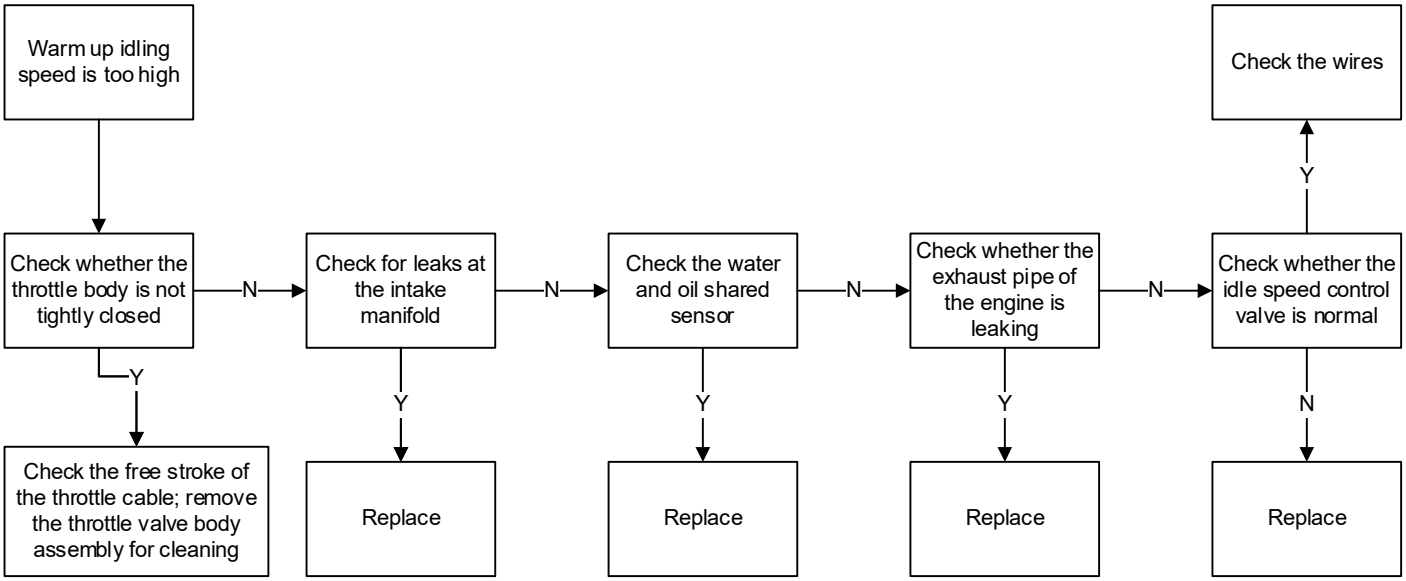

Unsteady idle speed of cooling car

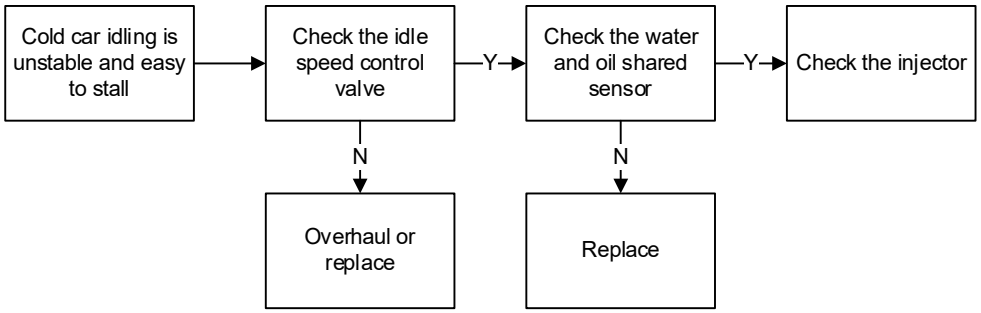

Unsteady idling, easy to cutoff

The engine is running at an unstable idling speed, easy to stall, and can return to normal after a warm car. You can refer to the following diagnosis process to troubleshoot the cause of the fault.

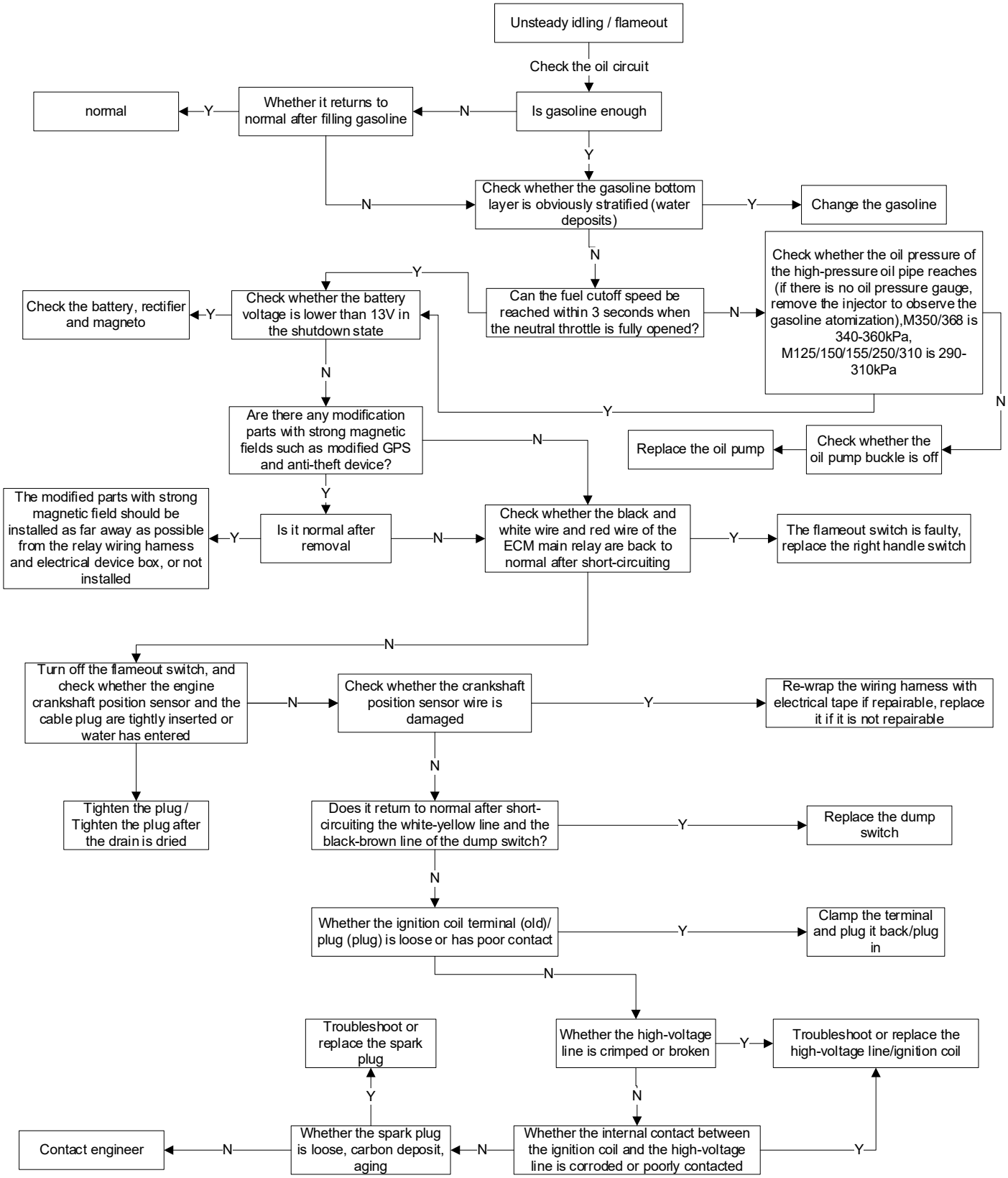

Analysis flow chart of EFI failure indicator light always on

If the EFI failure indicator light "" is always on, you should first check whether the wires of the EFI sensors are loose.

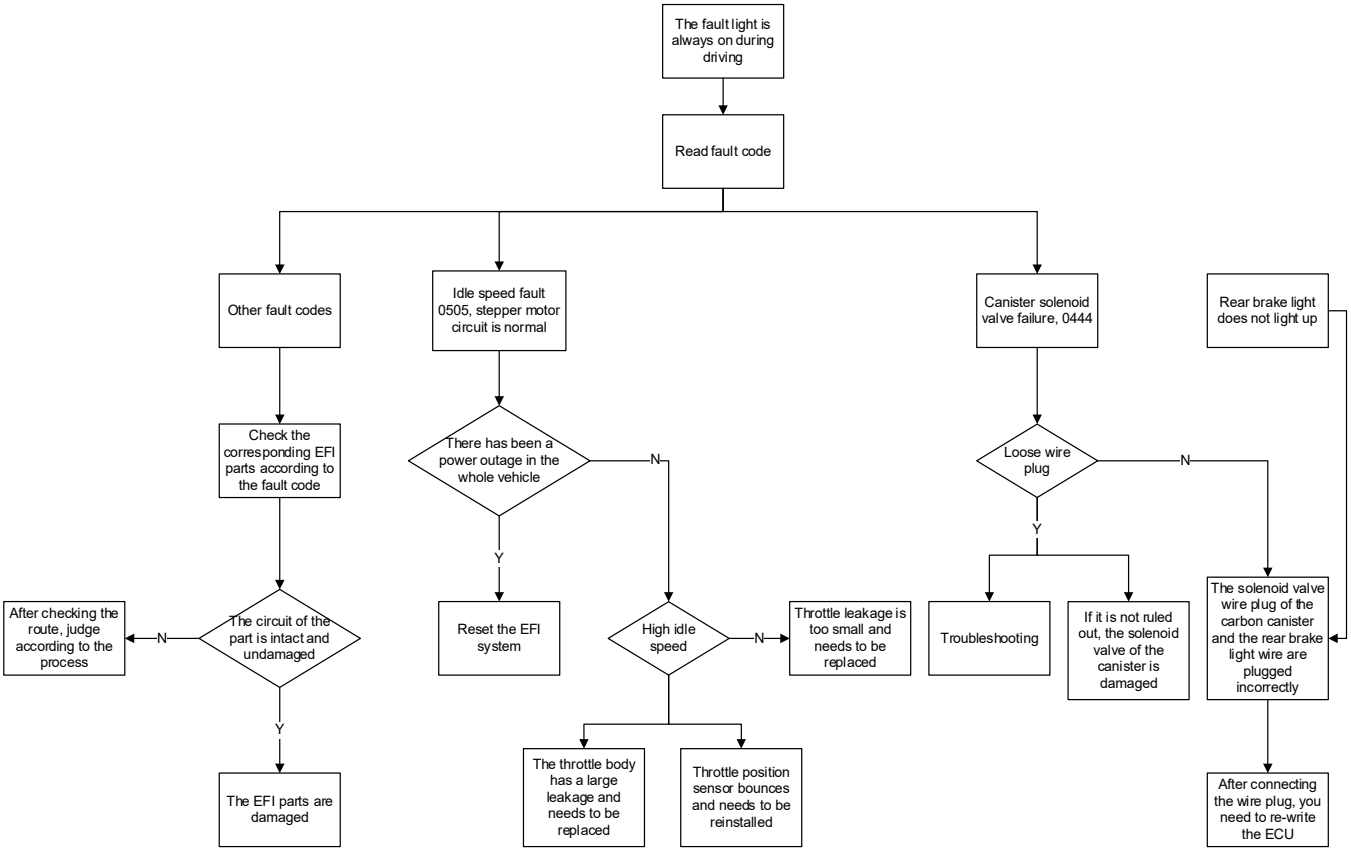

Electrical schematic diagram of EFI system

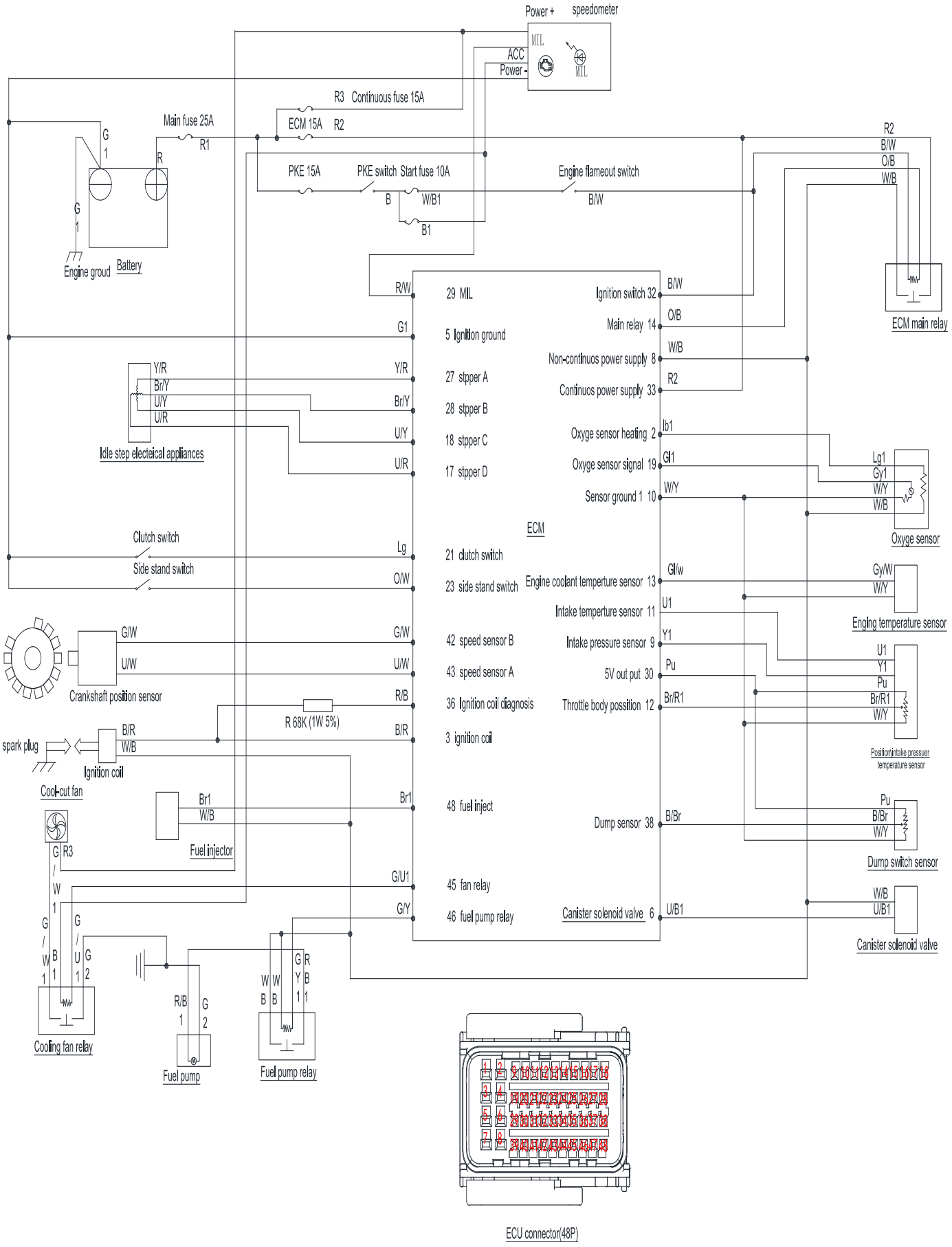

4. Ignition system

Know Before Service

1. The content of this chapter requires certain maintenance experience. It is recommended to check or repair with a qualified maintenance organization.
2. Do not disassemble the parts connected to the 12V power supply at will after power-on, to avoid the self-inductance of the coil in the electrical appliance, which may damage the ECU or sensor due to the instantaneous voltage.
3. Use spark plugs with correct calorific value. Spark plugs with improper calorific value may damage the engine.
4. Ignition system failures include poor plug connection and corrosion of wiring terminals. These two items should be checked first.
5. Since the ECU is factory preset, the ignition timing cannot be adjusted. If you need to adjust the ignition timing, you can only return to the factory for repair.
6. Ensure that the battery has sufficient power. If the power is insufficient, it may result in a slow start speed or weak spark intensity of the spark plug or no spark.

Tool：

Multimeter	Tool	Torque Wrench
		

7. The driving conditions and maintenance conditions of each vehicle are different, so it is impossible to list all the fault phenomena and troubleshooting procedures one by one. Only some of the more common faults can be listed. Maintenance personnel themselves also need to have certain professional knowledge and experience accumulation process.
8. See the section "Spark plug" in the chapter "Maintenance" of this manual for details of spark plug disassembly and inspection. Before disassembling the spark plug, clean up the surrounding debris and dust with a dust blower. After disassembly, the spark plug port must be blocked to prevent foreign matter from falling into the engine.

⚠WARNING

●Do not plug and unplug the plugs of various parts at will, and it is forbidden to clean the plugs directly with water. After plugging and unplugging, be sure to check whether it is plugged back correctly.

Troubleshooting

Check the following items before diagnosing the ignition system

a. Check whether the spark plug is abnormal;

b. Check whether the ignition coil high-voltage cap or plug is loose;

c. Check whether water enters the high pressure cap;

d. If there is no spark, find the ignition coil of the same model to confirm that there is no fault and install it on the faulty vehicle to test whether there is spark;

e. Check to unlock the vehicle, turn the flameout switch to "", and measure whether the "initial voltage" of the ignition primary coil is consistent with the battery voltage when the engine is not started.

Spark plug without spark

1. Improper spark plug gap

If the gap is too small, the electrode has a "flame suppression" effect to inhibit flame generation, and the spark intensity is weak; if the gap is too large, the ignition voltage will cause no spark. M310/350/250 adjust to the standard 0.8-0.9mm (0.031-0.035 in), M125 adjust to the standard 0.7-0.9mm (0.028-0.035in).



M310/350/368/250/368(ETC)



M125



M155/150

2. A layer of oil film is attached to the surface of the spark plug electrode

Engine oil or gasoline flees into the combustion chamber and adheres to the surface of the electrode, causing the electrode to short-circuit and cause no sparks. Engine oil is generally introduced from the gap between the piston and the cylinder wall and valve guide. Check whether the gap is normal. If it is abnormal, replace the corresponding parts. The accumulated gasoline may be caused by the mixture being too thick when the cold engine is started, and it can be cleaned before trying to ignite.

3. The spark plug skirt is damaged

The high-voltage current breaks down and leaks from the damaged part of the skirt, and the spark plug needs to be replaced.

4. The electrode has carbon deposits, and the center electrode leaks electricity to the surroundings without discharging to the electrode

Excessive accumulation of carbon or oil on the electrode causes a short circuit; and may cause the insulator to burn out. Clean up carbon deposits or replace spark plugs.

5. Electrode damage

The center electrode is damaged by the electric spark or the chemical corrosion of the burning gas for a long time, and it needs to be replaced.

6. Reduced spark plug insulation

Reduced insulation performance will weaken the ignition voltage, resulting in weakened or no sparks; need to be replaced

7. Short circuit of ignition coil high voltage wire

Ignition coil needs to be replaced

8. Insufficient battery power

If the battery is insufficient, the spark strength is weak or there is no spark. Use the charger provided with the car to charge. Or charge for long-distance riding.

9. ECU failure

After the above reasons are eliminated, the ECU that has been removed from the same model vehicle can be replaced with a faulty vehicle to judge.

Ignition system layout

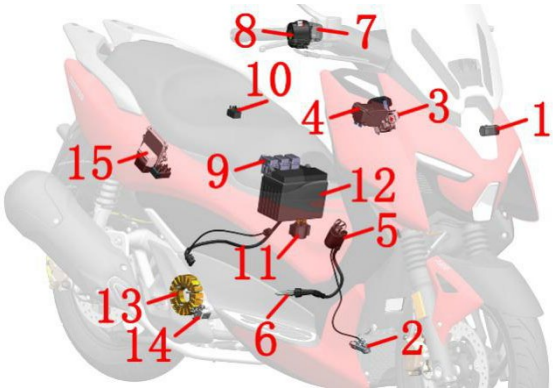

M310/250

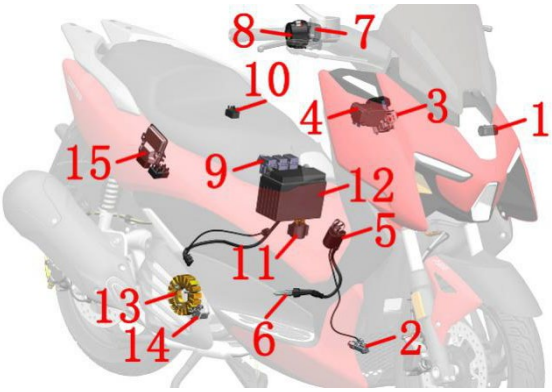

M125/150

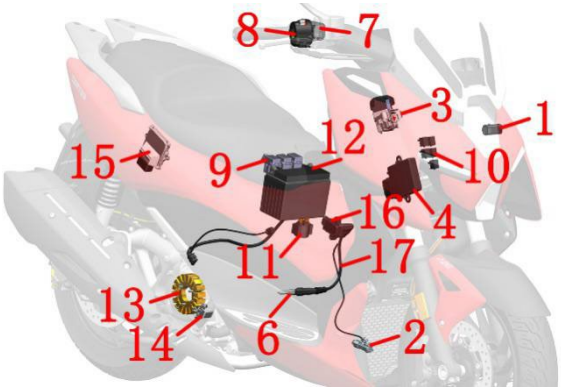

M350/368

1- Dump switch 2- Side bracket flameout switch 3- Faucet 4- PKE 5- Ignition coil 6- Spark plug 7- Right-hand handle auxiliary switch 8- Right-hand handle switch 9 Fuse box 10- Relay 11- Starting relay 12- Battery 13- Magnetic stator 14- Crankshaft position sensor 15- ECU 16- Ignigion body(M350/368) 17- High voltage line (M350/368)

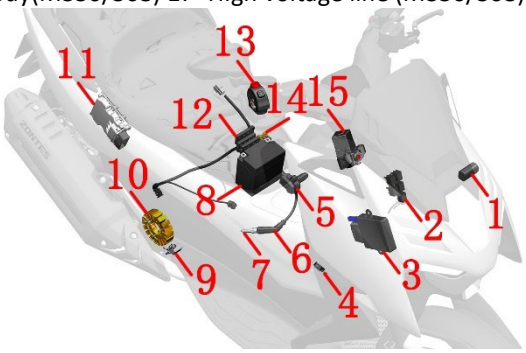

M368(ETC)

1 - Dump switch 2 - Relay 3 - PKE 4 - Side bracket flameout switch 5 - Ignition body 6 - High vol
tage line 7 - Spark plug 8 - Battery 9 - Crankshaft position sensor 10 - Magneto stator 11 - ECU 12 - Fuse box 13 - Right handlebar switch 14 - Starter relay 15 – Faucet

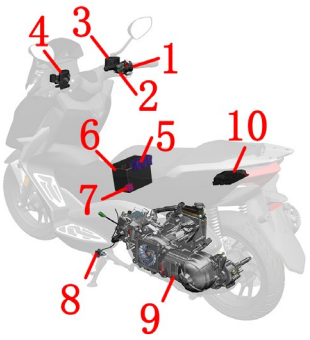

M155

1 - Right handlebar switch (kill switch, start button); 2 - Right handlebar secondary switch (vehicle unlock); 3 - Front disc brake master cylinder (front brake switch); 4 - Rear disc brake master cylinder (rear brake switch); 5 - Fuse box; 6 - Battery; 7 - Starter relay; 8 - Side stand kill switch; 9 - Start-stop engine; 10 - Start-stop controller

Caution:

●The fuse box comes with the main wiring harness and there are 3 in total. For detailed illustrations, please refer to the EFI relay section in the "Electronic Injection System" chapter of this manual.

●The magneto stator and crankshaft position sensor are integrated in one part and cannot be replaced separately. For details about the troubleshooting of the crankshaft position sensor, please refer to the section "Crankshaft Position Sensor" in the "Electronic Injection System" chapter of this manual.

Electrical schematic diagram of ignition system

M310/125/150/350/368/250

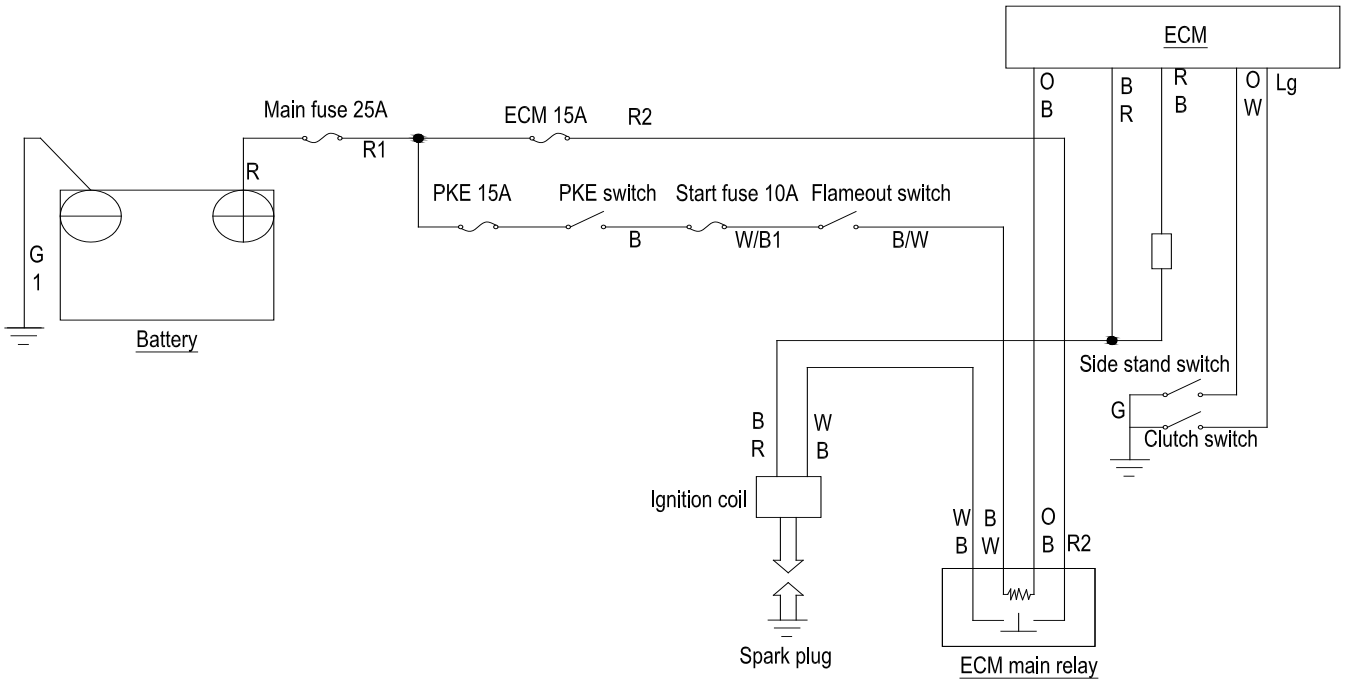

M155:

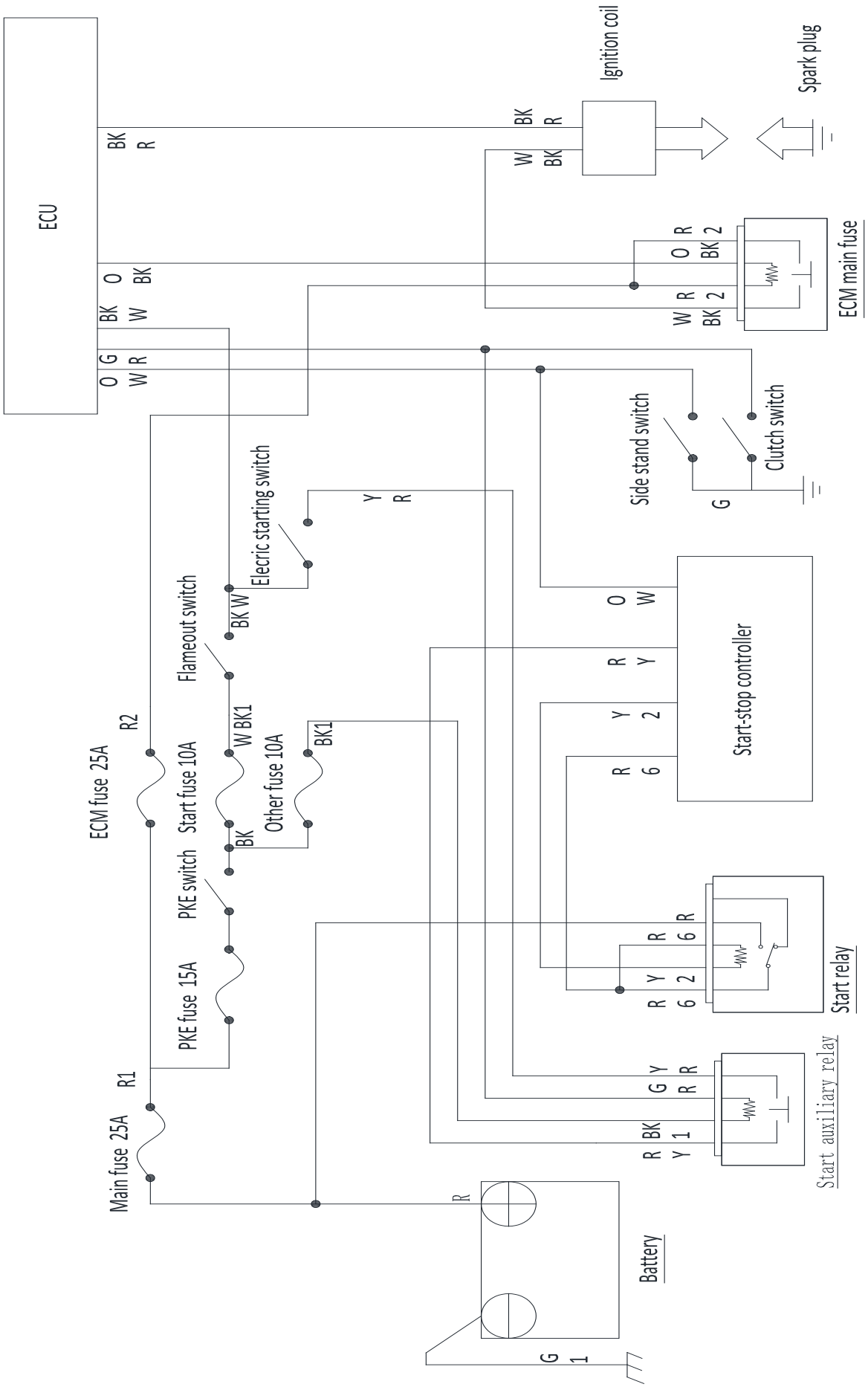
ECU
BK
R
O
BK
BK
W
O
W
G
R
Ignition coil
Spark plug
BK
R
W
BK
ECM main fuse
O
R
BK
2
W
R
BK
2
Side stand switch
Clutch switch
G
Y
R
Electric starting switch
BK W
Flameout switch
W BK1
BK
Other fuse 10A
BK1
ECM fuse 25A
R2
Start fuse 10A
PKE switch
PKE fuse 15A
R1
Main fuse 25A
O
W
R
Y
R
6
Y
2
Start-stop controller
R
6
R
Y
6
2
Start relay
G
Y
R
R
BK
Y
1
Start auxiliary relay
R
Battery
G
1

Ignition system inspection

Caution:

●If there is no spark in the spark plug, check all the cable connections for looseness or poor contact before checking the ignition system.

●Use a high-precision digital multimeter.

For details of the ignition coil test method, please refer to the section "Ignition Coil" in the "Electronic Injection System" chapter of this manual.

Pull out the high-pressure cap, find a spark plug of the same model that is confirmed to be normal, and install it on the high-pressure cap close to the cylinder head cover to do an ignition test to confirm whether the ignition coil is faulty.

Refer to the crankshaft position sensor section in the "Electronic Injection System" chapter of the "Electronic Injection System" chapter of this manual to check whether it is abnormal.

Ignition coils

For details on the disassembly and test methods of the ignition coil, please refer to the section "Ignition Coil" in the "Electronic Injection System" chapter of this manual.

5. Starting system

Know Before Service

1. If current flows through the starter motor when the engine is not started, it can be judged that the starter motor is damaged and needs to be replaced.
2. Before servicing the starter motor, turn on the engine stop switch to "" to prevent the misoperation from causing the starter motor to start suddenly and cause personal injury.
3. When the power is insufficient, the engine may not be able to start quickly, or the ignition current cannot be provided.
4. You can check or repair the startup system by referring to the steps in the troubleshooting process.

Tool：

Multimeter	Tool	Torque Wrench
		

WARNING

●When the engine cannot be started, do not press the electric start button frequently. Frequent operation can cause overheating or damage to the starter motor, flooding, battery feed, etc.

Troubleshooting

Caution:

●Ensure that the battery is fully charged and in good condition.

●Check whether the main fuse (25A) and ECM fuse (15A) are blown. If the fuse is replaced with a new one and it is blown out, you need to troubleshoot the line first.

●The starting motor should work under the following conditions:

a. Unlock the vehicle;

b. Retract the side bracket;

c. Turn the engine flameout switch to "";

d. Press the start button.

Starter motor does not run troubleshooting process：

1. Starting relay

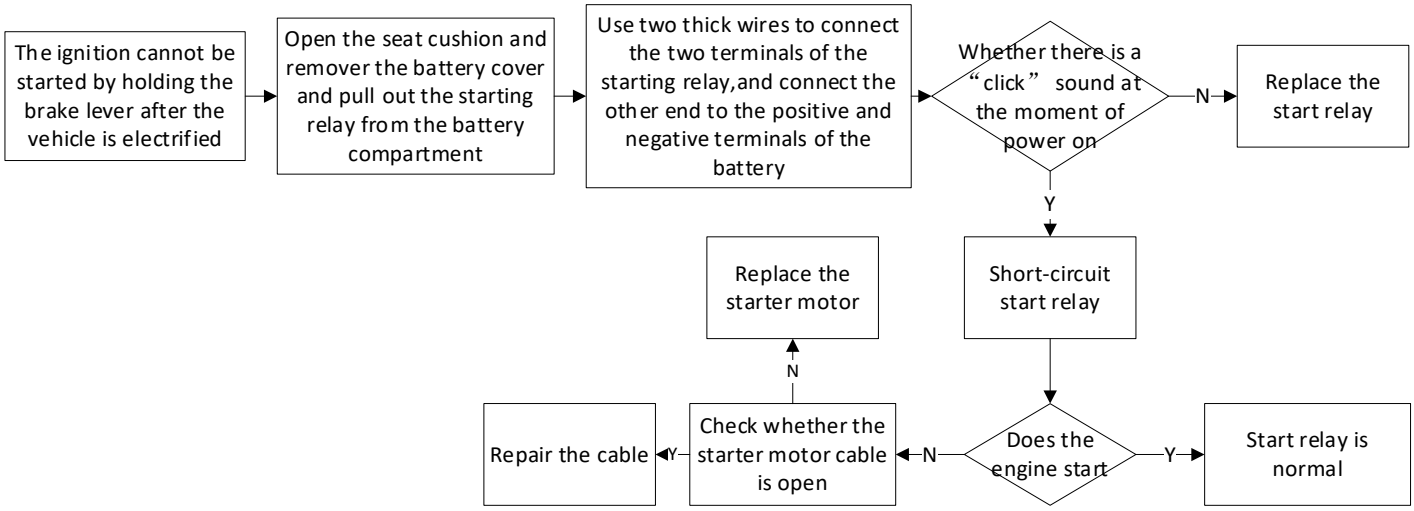

2. Starter motor

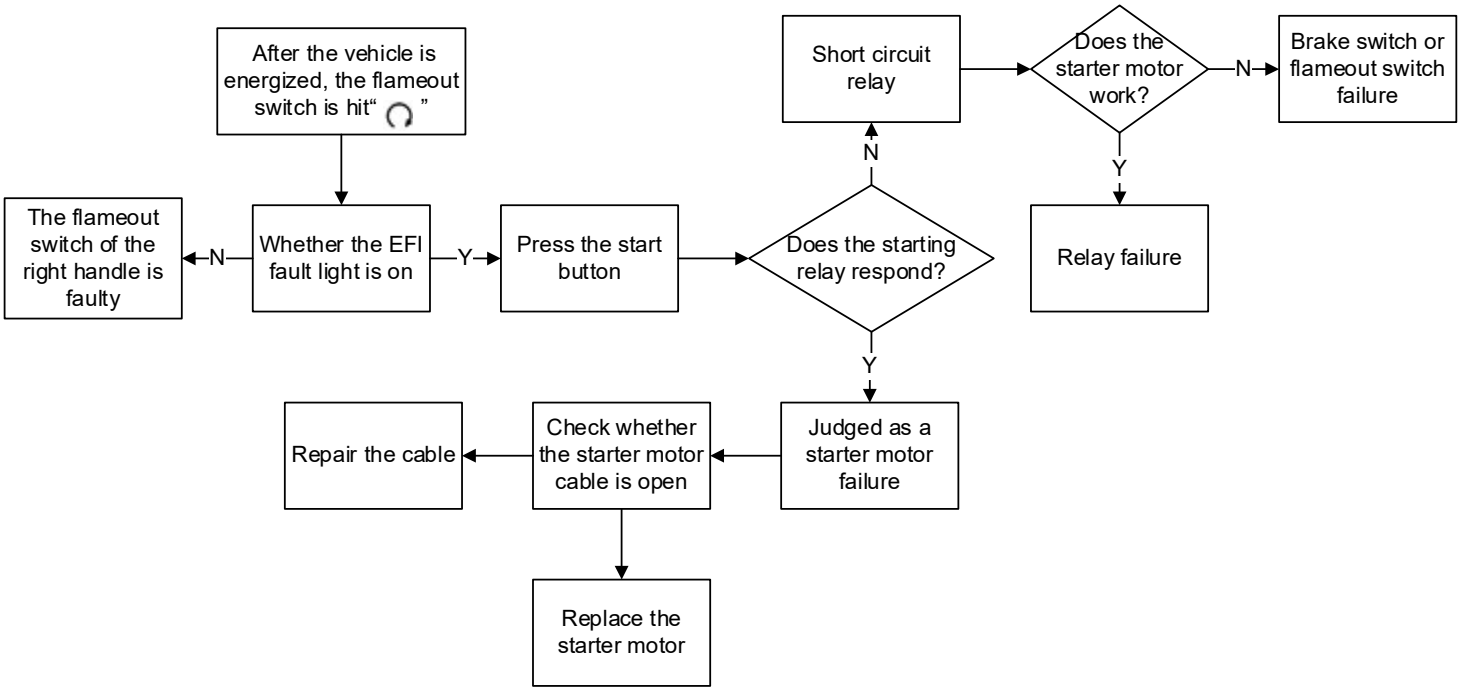

3. The starter motor runs slowly

Check whether the battery power is insufficient;
Check whether the battery cable connector is in poor contact;
Check whether the starter motor cable is in poor contact;
Check whether the starter motor is abnormal.

4. The starter motor is working normally, but the engine cannot be started

Check whether the starter gear train is faulty;
Check the ignition system for malfunctions.

Ignition system layout

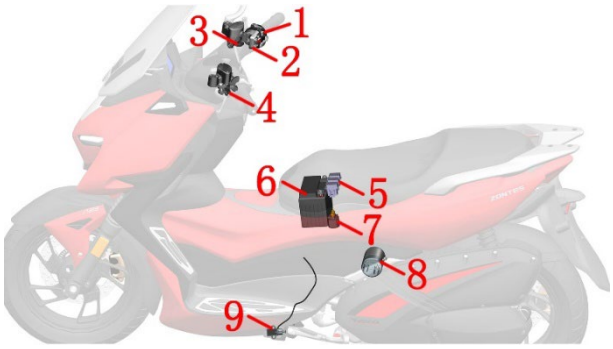

M310M125/150/250

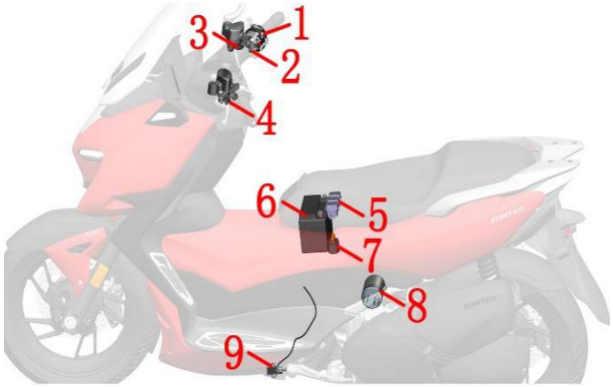

M350/368/368(ETC)

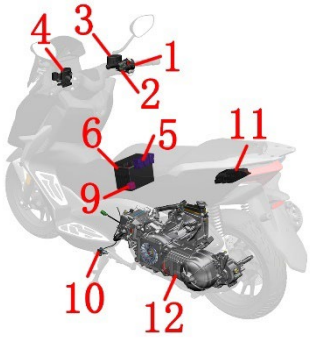

M155

1-Right-handle switch (stop switch, start button) 2-Right-handle secondary switch (to unlock the vehicle) 3-Front disc brake main pump (front brake switch) 4-Rear disc brake main pump (rear brake switch) 5-Fuse box 6-Battery 7-Starting relay 8-Starting motor 9-Side bracket flameout switch 10- Starting relay(M155) 11-Start-stop control (M155) 12-Start-stop engine(M155)

Starting system electrical schematic diagram

BK=Black R=Red G=Green W=white Y=Yellow O=Orange

M310/350/125/150/368/250/368(ETC)

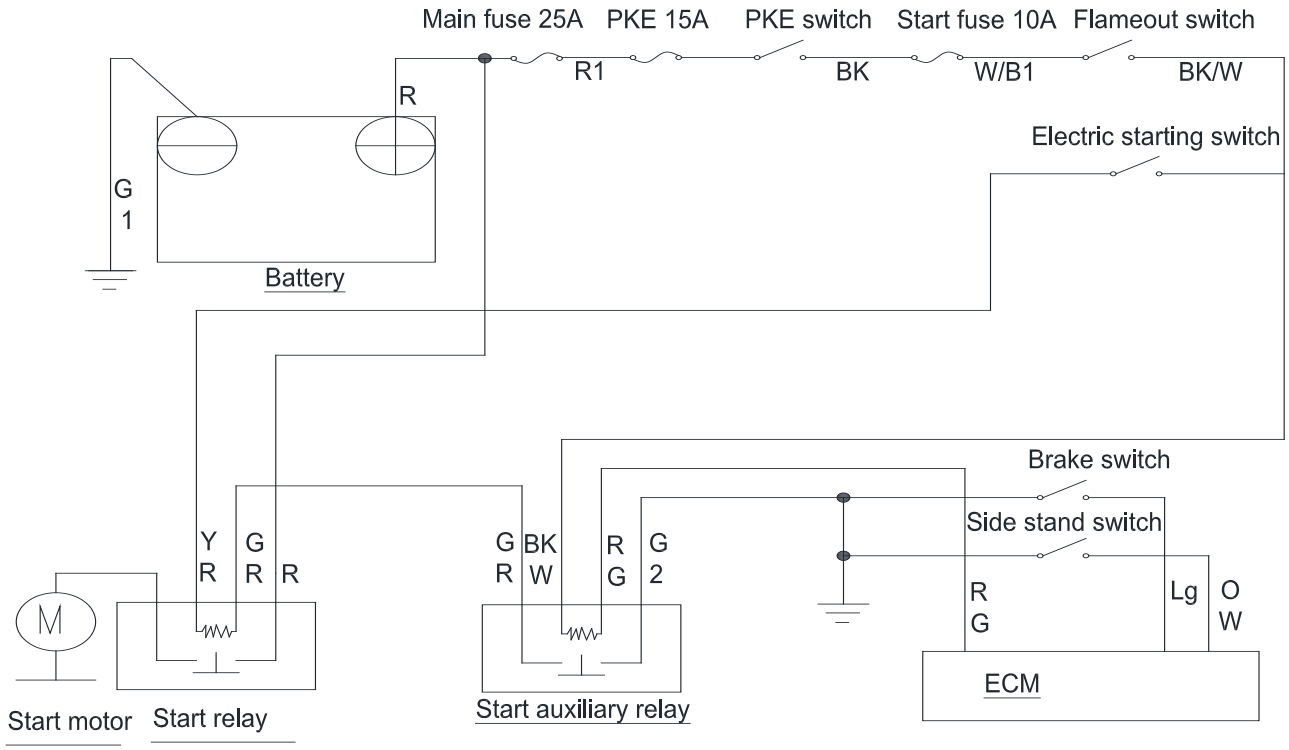

M155

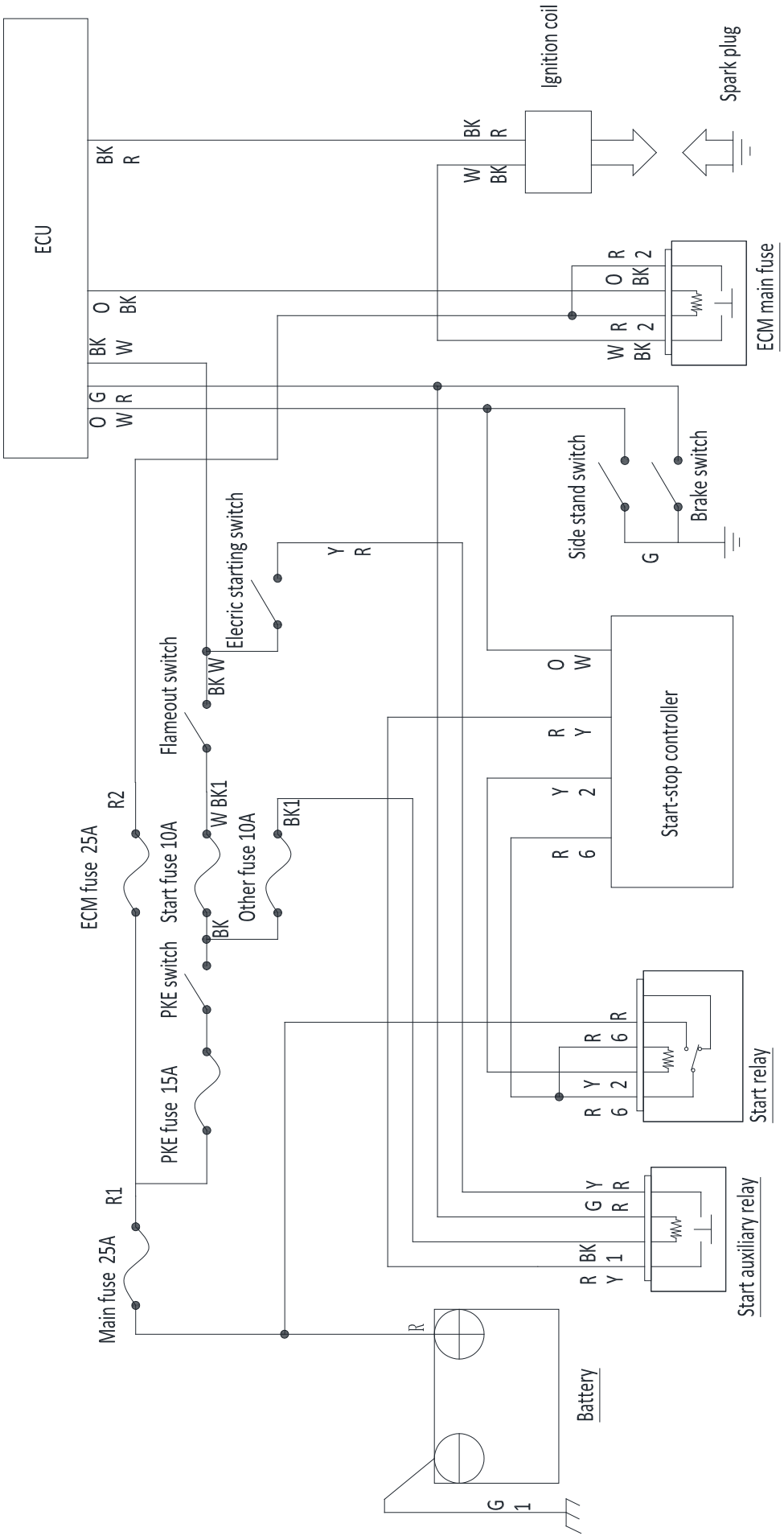
ECU
Ignition coil
Spark plug
ECM main fuse
Side stand switch
Brake switch
Elecric starting switch
Flameout switch
Start-stop controller
ECM fuse 25A
Start fuse 10A
Other fuse 10A
PKE switch
PKE fuse 15A
Main fuse 25A
Start relay
Start auxiliary relay
Battery

Starter motor

Caution:

●If the starter motor is removed for maintenance, replace the O-ring with a new one and apply a proper amount of engine oil.

●Our company only sells starter motor assemblies, not O-rings and motor parts separately. The O-ring has an inner diameter of ϕ25mm (0.98in) and a wire diameter of 3mm (0.12in).

●The M125/350/155/368/150/250/368(ETC) steps are similar to the M310, taking the M310 as an example.

1. Remove the starter motor

a. Refer to the steps of removing the rear storage box to remove the rear storage box. For the removal steps, refer to the stepping motor removal and cleaning carbon deposits in the section of the throttle valve body in the "Maintenance" chapter.

b. M310 cut off the two grade 0 flame-retardant cable ties as shown in the figure.

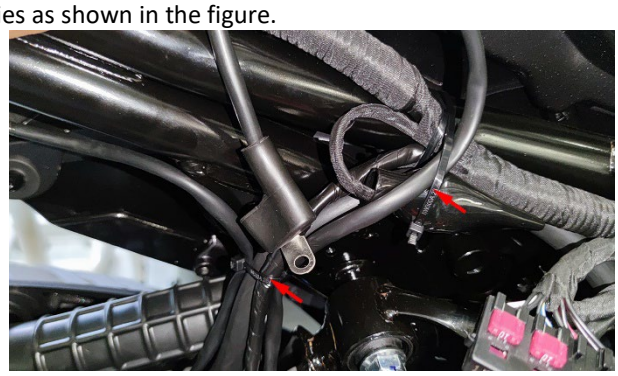

M125 loosen the rubber buckle and the wire clamp.



c. Loosen the clamp bolt shown in the figure with a 4# inner hexagon counterclockwise, and pull the air filter outlet pipe toward the rear wheel to pull out the throttle valve body.

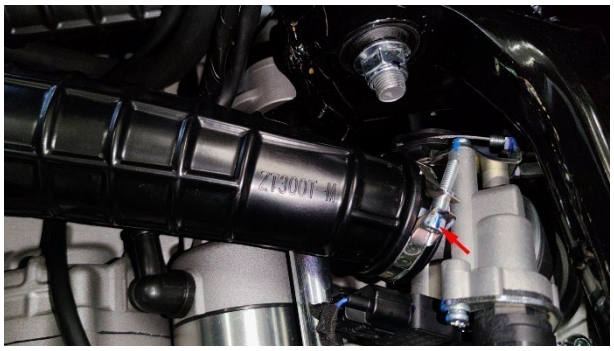

d. Pull the air outlet pipe to the right side of the vehicle to expose the two M6×30 bolts that fix the starter motor, and remove them with an 8# sleeve. After removing the bolts, remove the starter motor from the engine in the direction indicated by the big arrow.



e. When reassembling, make sure not to omit the O ring that comes with the starter motor, and align the teeth of the electric starter reduction gear. Note that the O-ring needs to be correctly assembled into the box, as it will cause leakage if cut edges occur. Torque of the two bolts for fixing the starter motor: 12±1.5 N.m (1.2±0.2 kgf.m, 9±1 lbf.ft). And mark with a marker.



2. Disassemble the starter motor

Caution:

●If the magnet tile pulls the electric pole towards the motor housing, the coil may be damaged.

●When installing the electric motor from the slot of the starter motor housing to the housing, make the commutator bar face the rear side;

●When installing the back cover of the starter motor, please align the marking line with the index line;

●When installing the front cover of the starter motor, pay attention to prevent damage to the oil seal lip of the electric drive shaft, and align the marking line of the front cover with the index line on the motor housing.

Disassemble and assemble the starter motor as shown in the figure below.

●The M125 steps are similar to the M310, taking the M310 as an example.

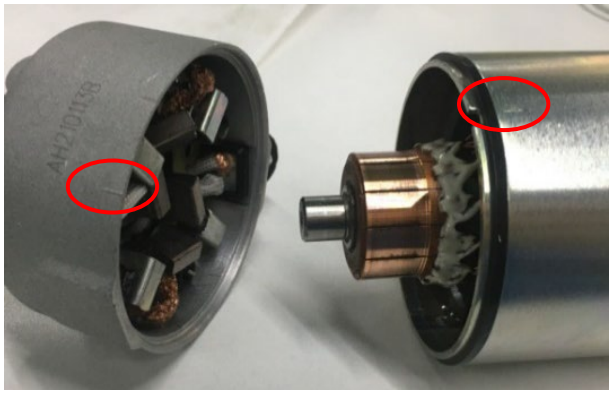



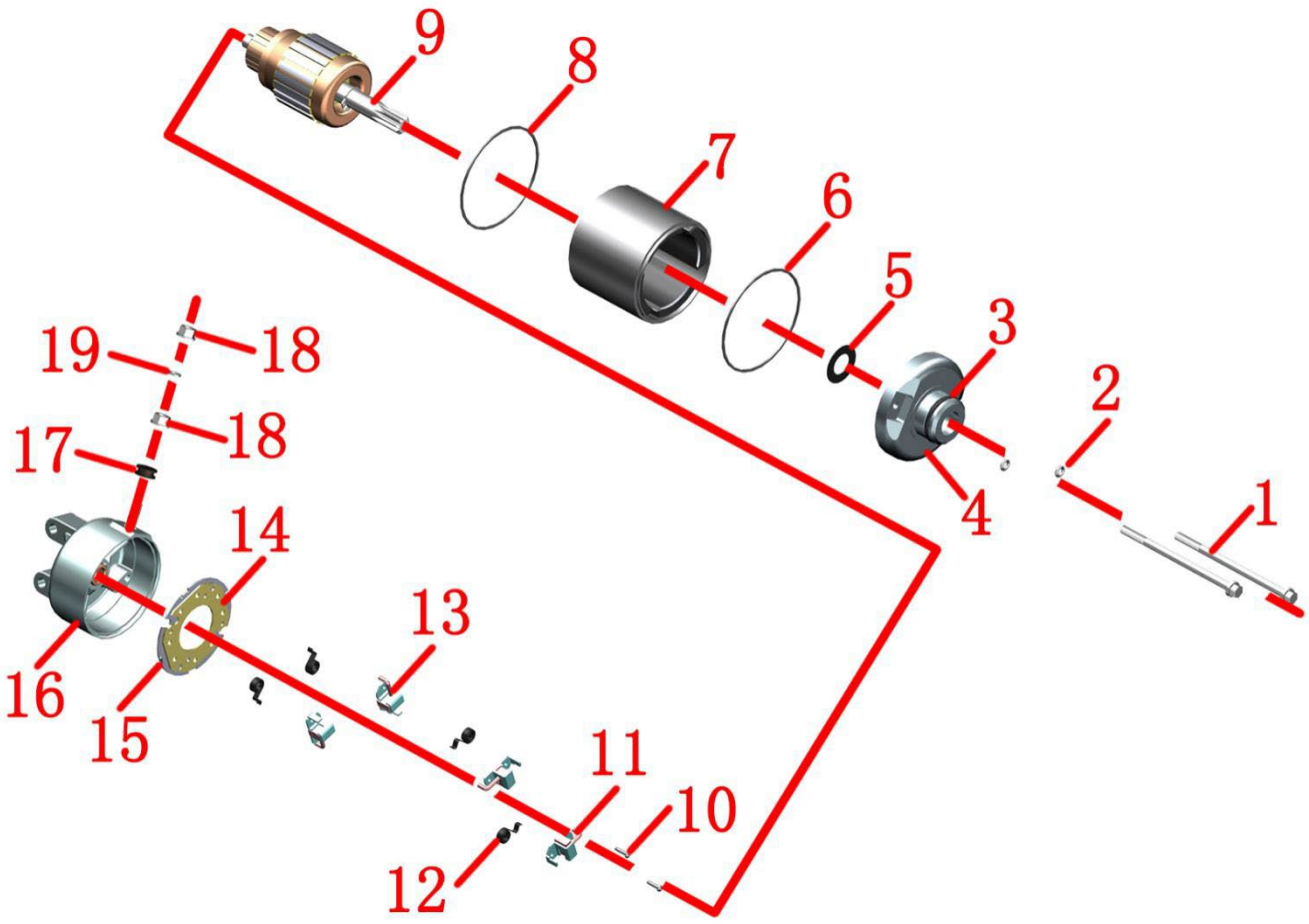

1-M6×90 bolt×2 2-O ring×2 3-O ring 4-starter motor front cover 5-gasket 6-rectangular sealing ring 7-starter motor outer shell 8-rectangular sealing ring 9-electric pole 10-screw ×2 11-Negative brush×2 12-Volute spring×4 13-Positive brush×2 14-Brush frame 15-Brush holder insulation gasket 16-Starter motor back cover 17-Insulation gasket 18-Nut×2 19- Gasket

Examination

Starter motor front cover：

Check whether the oil seal of the front cover is worn and damaged;
Also check whether the outer ring fits tightly with the front cover.



Motor back cover：

Check whether the bushing of the back cover is worn or damaged;

Check whether the brush is damaged, measure the length of the brush, and use the limit11.5mm（0.45in）.

Check the connectivity of the back cover as follows：

The positive brush is connected to the end of the cable; the cable end is not connected to the back cover; the negative brush is connected to the back cover.

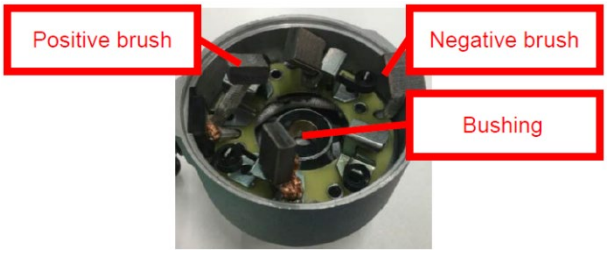

Denki：

Clean the metal scraps on the electric screw, and check whether the commutator bar is discolored;
Check that there should be a gap between the commutator and the crankshaft.

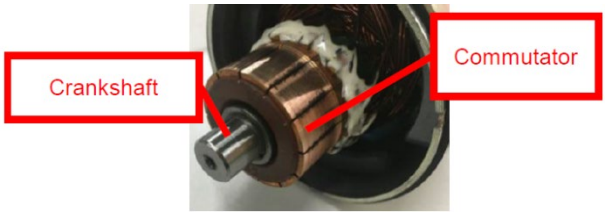

Check the starting relay

●The M125/350/368/150/250/368(ETC) steps are similar to the M310, taking the M310 as an example.

1. Operation check

a. Remove the seat cushion, remove the battery box cover assembly, and pull out the starting relay.

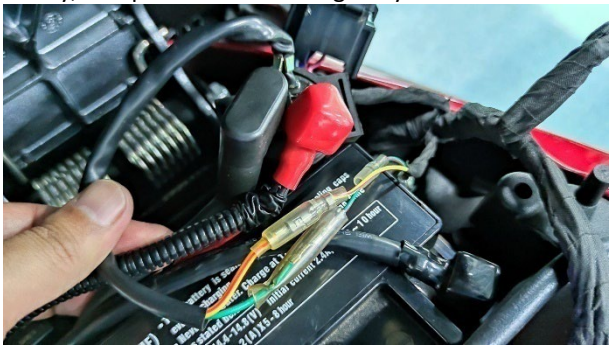

b. Unlock the vehicle, turn the engine shutoff switch to "", retract the side bracket, pinch the brake handle and press the start button. You should hear the sound of the start relay picking up, otherwise you should check the start circuit.

2. Check the relay coil

2.1 Input line

Adjust the multimeter to the DC voltage 20V file (if it is an automatic range multimeter, adjust it to the DC voltage file). Insert the red test lead into the rubber sleeve of the yellow/red wire and stick it tightly to the terminal.

Unlock the vehicle, turn the engine off switch to "", and the black test lead can select any bolt connected to the frame nearby. When the brake handle is pressed and the start button is pressed, the voltage measured between the yellow/red wire and the ground wire should be the battery voltage.

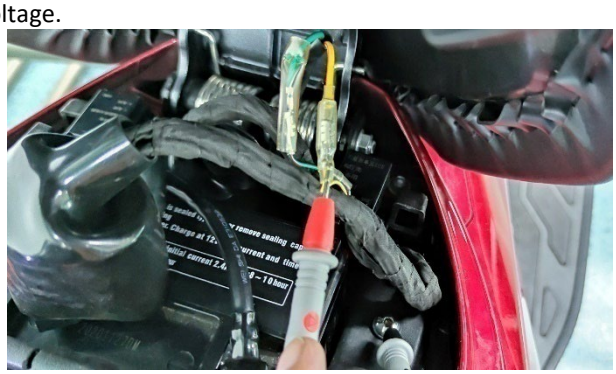

2.2 Ground wire

The vehicle is powered off and locked. Set the multimeter to the buzzer position, connect one test lead to the green/red wire, and one to any bolt connected to the frame. It should be conductive when the start button is pressed.



3. Check the starting relay

Use a thicker wire to directly connect the 12V battery to the relay. Use the buzzer file of the multimeter to measure the green/red and yellow-red wires, which should be conductive, and should be disconnected after disconnecting the battery.

4. Disassembly and assembly of the starting relay

Open the black protective cap of the starting relay and use a 10# sleeve to remove the self-contained M6 nut, take out the wire and screw it back to the nut to prevent loss; use the same method to remove the other end. Unplug the yellow/red and green/red wires.



When re installing, the yellow/red and green/red wires of the relay correspond to the color of the main cable, and the nuts are not distinguished. Be sure to close the protective cap after tightening the nut.

M155 start relay

Please refer to the User's Manual provided with the vehicle for detailed instructions on starting and stopping and fault indication.

1. Starting relay

For the inspection of the starting relay, refer to the section of "Starting Relay" in Fault Diagnosis and Troubleshooting of Electronic Injection Parts in Electronic Injection System.The starting relay is located near the positive terminal of the battery and can only be removed by disassembling the battery box.

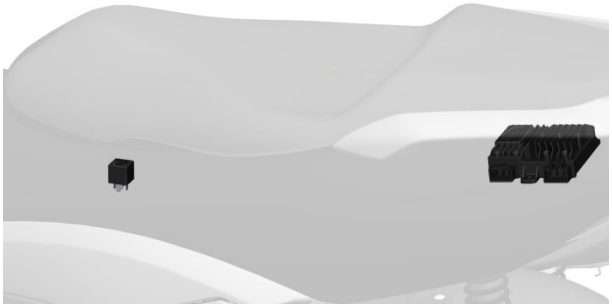

2. Start-stop controller

The start-stop controller can only be detected by a special instrument.The simple method can be used to judge whether there is a fault by removing the materials and parts of the same vehicle type and replacing them on the fault vehicle.The start-stop controller is located above the rear fender and can only be removed by removing the rear fender, tail skirt, storage box, etc.

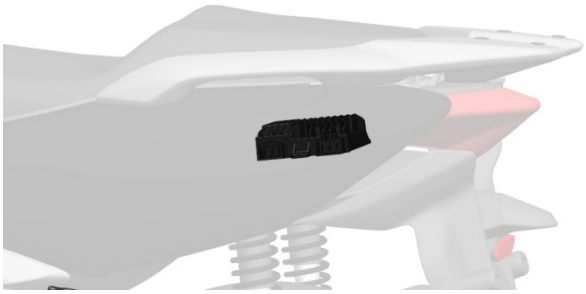

6. Fuel supply system

Know Before Service

1. Bending or twisting the control cable will affect the smooth operation, and may cause a short circuit or open circuit, causing the vehicle to lose control.
2. The operation should be carried out in an open and ventilated place. All activities that may cause sparks, such as smoking, calling on mobile phones, etc., are prohibited on the job site.
3. Before operation, release the pressure of the high-pressure fuel pipe. The method is as follows: unplug the fuel pump, start the engine and run at idling speed until the engine stops. Turn off the engine， Turn off to "", turn off the power and lock the bike.
4. Do not fully open the throttle valve body manually after removing the throttle cable, which may cause abnormal idling.
5. After removing the throttle valve body, apply masking paper or a clean non-woven fabric to block the air inlet to prevent foreign matter from falling into the engine.
6. Do not damage or operate the throttle valve body, which may cause abnormal throttle operation.
7. After removing the throttle valve body, prevent dust or foreign matter from entering the throttle hole or air passage. If necessary, it can be cleaned with dry compressed air.
8. It is forbidden to loosen or tighten the bolts or nuts that have been marked with a marker on the throttle, which may cause abnormal throttle opening and closing and idle speed control.
9. Cannot use carburetor cleaning agent.
10. Throttle valve body parts not specified in this manual shall not be disassembled.

Tool：

Multimeter	Tool	Torque Wrench
		

CAUTION

●After reinstalling the battery or EFI components, reset the EFI system. For specific operations, please refer to the precautions in the driver's manual or the throttle valve body chapter of this manual.

Fuel tank removal

Caution:

●The demolition site must be ventilated and pay attention to fire prevention. See the previous chapters for specific matters, so I won't repeat them here.

●First use the oil well pump or wait until the fuel in the fuel tank is almost exhausted before disassembling.

●Be careful not to pull the nylon rope shown in the figure, forcibly pulling it may break. And our company does not sell this nylon rope separately.



●Pay attention to protect the oil outlet of the oil pump, and only pull out the high-pressure oil pipe axially. Be careful not to pull or press the oil port radially.

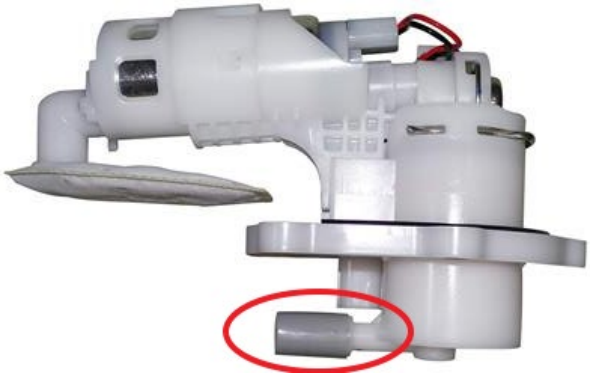

●The M125/350/155/368/150/250/368(ETC) steps are similar to the M310, taking the M310 as an example.

1. Disassemble the fuel tank assembly

a. Follow the steps in the pre-service instructions to first consume the fuel in the high-pressure fuel pipe.

b. Refer to the steps for removing the cover first to remove the outer cover of the fuel tank, the side cover, the pedal and other plastic appearance parts. Remove the Anti-Vibration plate. Use a 10# sleeve to remove the 4 M6×12 bolts on the right side.

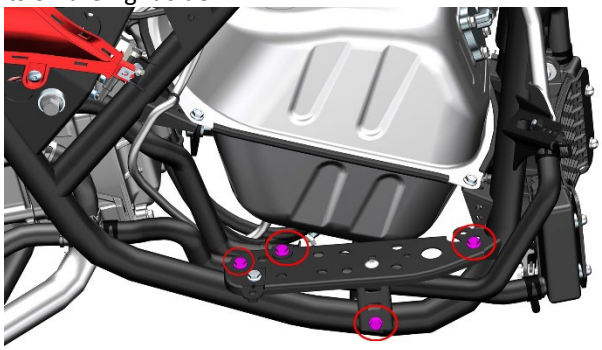

c. Press the anti-trip buckle of the plug of the oil level sensor and pull out the plug.



d. Remove the oil pump plug in the same way. Pinch the snorkel clamp and move it down, and pull out the snorkel. Press the anti-release buckle of the high-pressure oil pipe at the end of the oil pump, and pull the high-pressure oil pipe along the axis of the oil outlet of the oil pump.

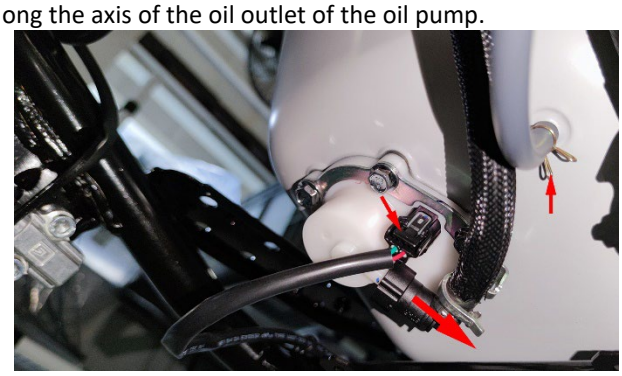

e. Use needle-nose pliers to slightly clamp the cable tie and push it up to remove it from the bracket.

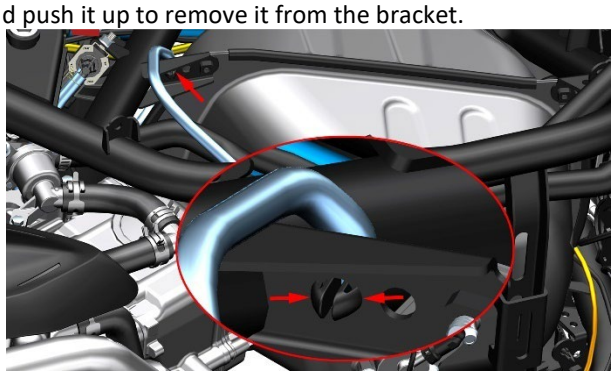

f. Use a 10# sleeve to remove the 4 M6×12 bolts (1) that fix the fuel tank.



g. After confirming that the high-pressure oil pipe, vent pipe and oil level sensor plug have been unplugged, stand on the right side of the vehicle to facilitate the removal of the fuel tank assembly. Hold up the fuel tank assembly and turn it clockwise (as shown in Figure 1), while turning, let the seam welding on the right side of the fuel tank go down to the bottom of the bracket (as shown in Figure 2). Turn clockwise about 90 degrees and turn the fuel tank assembly forward (as shown in Figure 3). After adjusting the position continuously, remove the fuel tank assembly (see Figure 4).

Because it is difficult to describe the process in detail, it takes many patience to try.





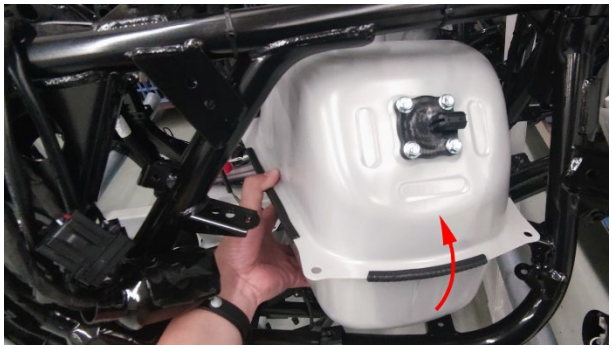



2. Disassemble the fuel pump

Turn the fuel tank assembly over and place the fuel pump facing upwards firmly. The small wooden stool can be turned over to ground the surface of the stool and put the fuel tank assembly on.

The ETC model uses 8# sleeves, M368 2024 models before November 18, 2025 are 10# sleeves, after which they are 8# sleeves, and other displacements are 10# sleeves diagonally to loosen 5 bolts(1), grasp the high-pressure oil pipe bracket (2), and remove the bolt(1) completely. The ETC model uses 8# sleeves, other models are 10# sleeves.

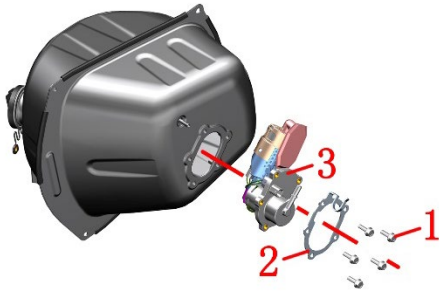

When re-assembling, you need to pre-tighten the corners and then tighten the 5 bolts. Otherwise, the uneven compression of the sealing rubber ring of the fuel pump will easily cause leakage and cause safety hazards.

Caution:

●Early production vehicles do not contain brackets(2), you can purchase and install them by yourself.

●The length of the bolt without bracket (1) is M6×16, and the length with bracket is M6×20.

●The fuel pump is a precision component that needs to be assembled in a dust-free workshop and requires rigorous testing, so it is forbidden to disassemble it by yourself. Therefore, the decomposition process of the fuel pump is not explained here.

3. Remove the oil level sensor

Place the removed fuel tank assembly. It is recommended to protect the fuel pump at the bottom of the fuel tank.

The ETC model uses 8# sleeves, M368 2024 models before November 18, 2025 are 10# sleeves, after which they are 8# sleeves, and other displacements are 10# sleeves to remove the 4 M6×16 bolts(1), and pull the sensor(2) out. Be careful not to pull it forcibly to avoid the deformation of the float connecting rod, which will cause the deviation of the oil volume display to increase.



When reassembling, you need to pre-tighten the corners and then tighten the 4 M6×16 bolts. Otherwise, the uneven compression of the sealing rubber ring of the oil level sensor may cause leakage and cause safety hazards.

4. Remove the external parts of the fuel tank assembly.

a.Take off the 4 segments directly(1).

b.Press down the fuel tank cap(2) and then rotate it counterclockwise to remove it.

c. The battery rubber pad (3) is pasted on the shell of the fuel tank, which is difficult to remove. If you need to remove it, you can use a heat gun to heat it and tear it off, or use a cleaning agent that removes the adhesive to remove it.



Examination

1. Fuel pressure test

Refer to the fuel pump section in the "Maintenance" chapter for the test method.

2. Fuel pump inspection

Unlock the vehicle, turn the engine stop switch to "", you should be able to hear the sound of the fuel pump running. If you don't hear the fuel pump running sound, turn off the engine and turn off the power first.

Refer to the steps in the "Maintenance" chapter to replace the high-pressure oil pipe first to remove the surrounding bottom plate. Refer to the previous fuel tank removal steps to unplug the fuel pump.

Use a multimeter to measure the voltage of the fuel pump plug cable end, unlock the vehicle, and when the engine stop switch is turned to "", the fuel pump will accumulate pressure for about 5 seconds, during which time the battery voltage should be able to be measured.

If the battery voltage can still be measured without starting the engine after the pressure accumulation is completed, check whether the fuel pump relay is normal. If the relay is normal, the fuel pump needs to be replaced if it is abnormal.

3. Oil level sensor

Use the resistance file of a multimeter to measure the resistance. The lowest position (empty oil): 287～313Ω, the highest position (full oil): 27～79Ω.

Pull the float connecting rod, there should be no jamming phenomenon and good contact of the contacts during the rotation process.

Check the appearance of the float, and there should be no damage.

7. Cooling system

Know Before Service

1. Please refer to the radiator section of the "Maintenance" chapter of this manual for the corresponding precautions for the coolant (antifreeze).
2. Check the cooling water pipe; check the height of the cooling liquid, adding and discharging the cooling liquid have been described in detail in the radiator section of the "Maintenance" chapter, and this chapter will not be repeated.

Tool:

			
Hoop clamp	Multimeter	Air source with adjustable air pressure	Homemade cover*

*It can be blocked with a soft rubber plug, or folded in half with a hose and tied up with a rope or wire as a plug for the small pipe to test the sealing of the water tank filling port. You can find a water pipe with an inner diameter of 16mm to cut off a section, and use a suitable air pipe joint and clamp to assemble it firmly at the other end to test the air tightness of the water tank filling port, the main water tank, and the small water tank.

WARNING

●When the engine is not completely cooled, opening the water tank cover may cause the coolant to spray out and cause burns. The water tank cover must be opened after the water tank and engine have cooled down.

Troubleshooting

1. The engine temperature is too high:

a. The coolant temperature of the meter is abnormal or the water temperature sensor is abnormal;
b. The thermostat is abnormal;
c. Insufficient coolant;
d. The radiator, water pipe, and water tank are blocked;
e. There is air entering the cooling system;
f. The cooling fan is faulty;
g. Cooling fan relay failure (see the EFI relay section in the "Electronic Fuel Injection System" chapter).

2. The engine temperature is too low:

a. The coolant temperature of the meter is abnormal or the water temperature sensor is abnormal;
b. The thermostat is abnormal;
c. The cooling fan relay is faulty (see the EFI relay section in the "Electronic Fuel Injection System" chapter).

3. Coolant leakage

a. Water pump seal failure;
b. O-ring is damaged or aging failure;
c. The radiator cover is damaged;
d. The gasket is damaged or aging failure;
e. Water pipe rupture;
f. The radiator is damaged.

Coolant system distribution map

M310

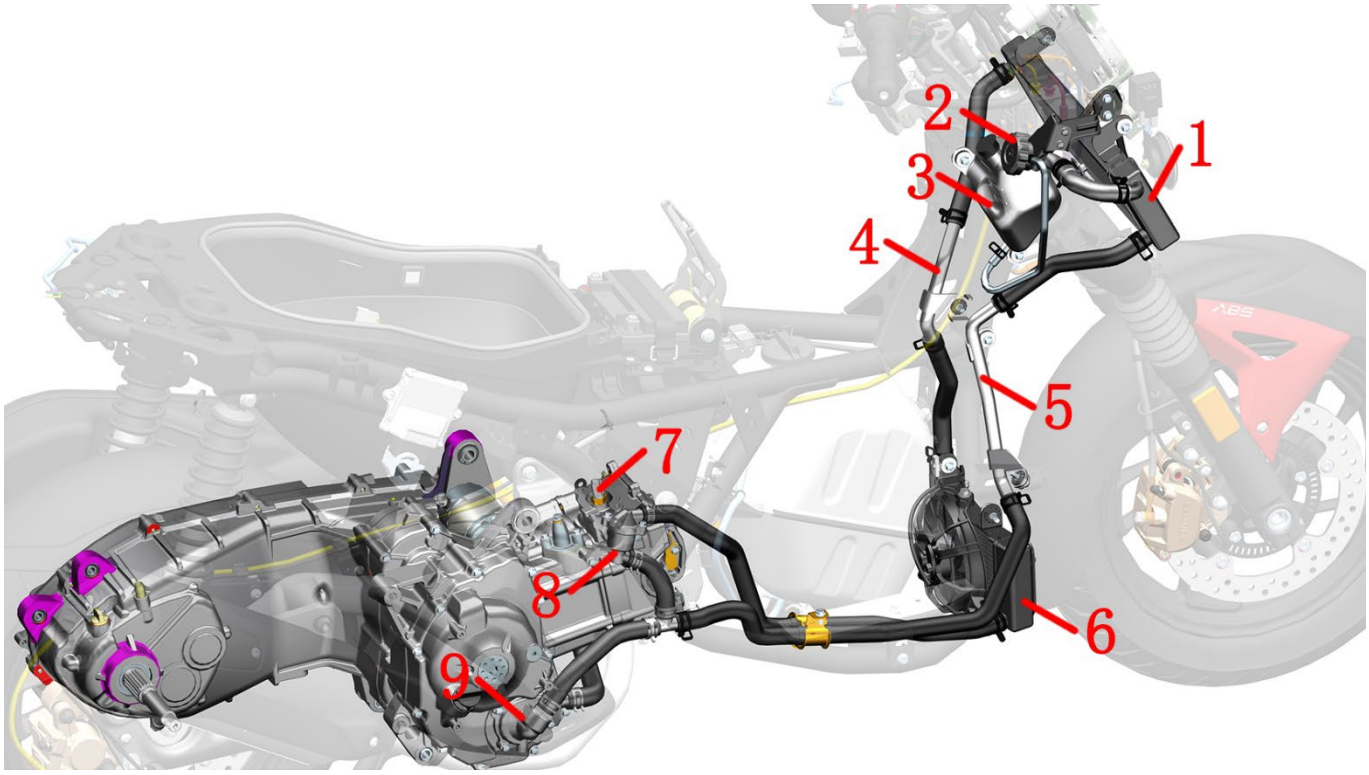

1- Main water tank 2- Water tank filling port 3- Secondary water tank 4- Aluminum water inlet pipe 5- Aluminum water outlet pipe 6- Small water tank 7- Water and oil shared sensor 8- Thermostat 9- Water pump cover assembly

1- Main water tank 2- Water tank filling port 3- Secondary water tank 4- Aluminum water inlet pipe 5- Aluminum water outlet pipe 6- Small water tank 7- Water and oil shared sensor 8- Thermostat 9- Water pump cover assembly

M125

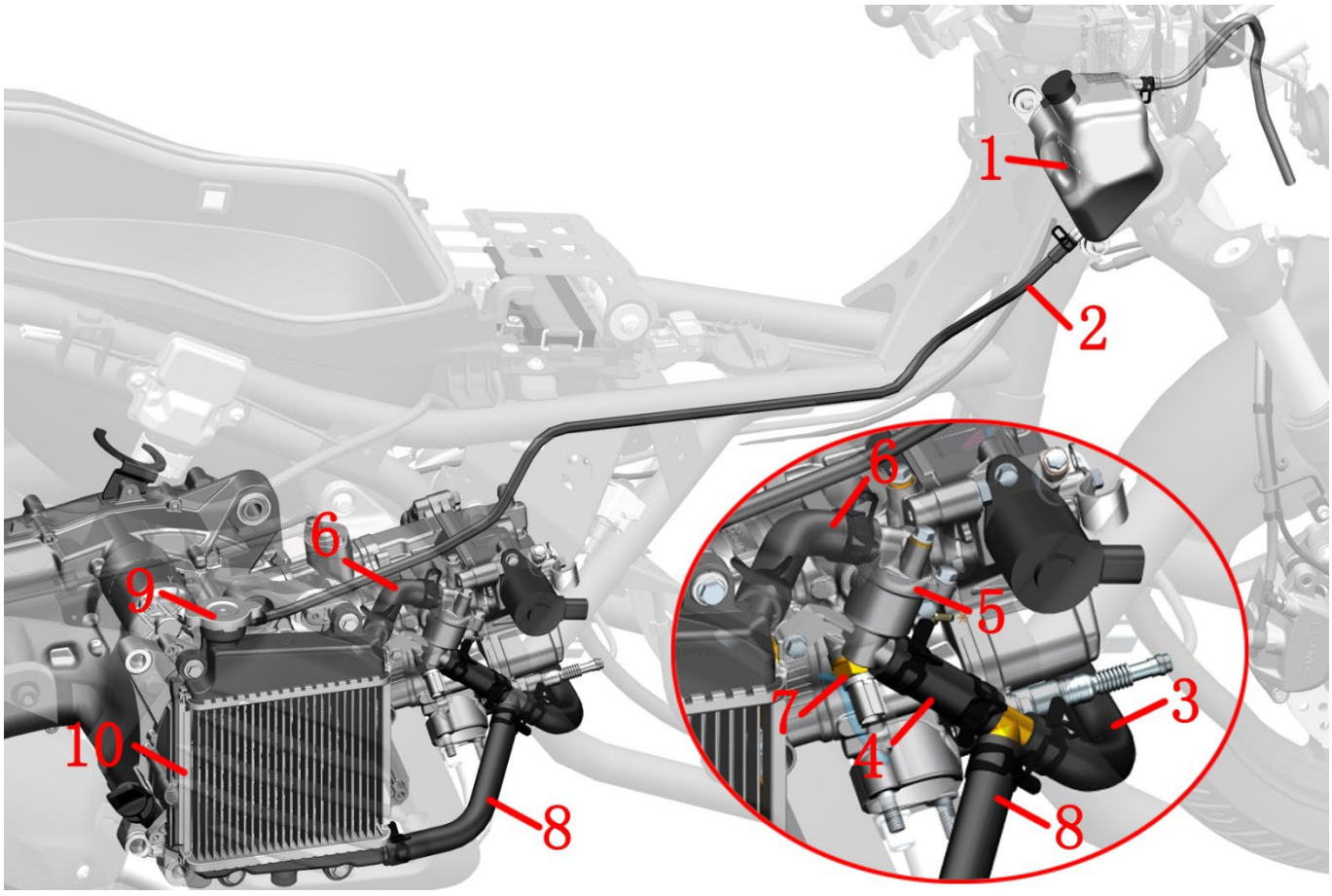

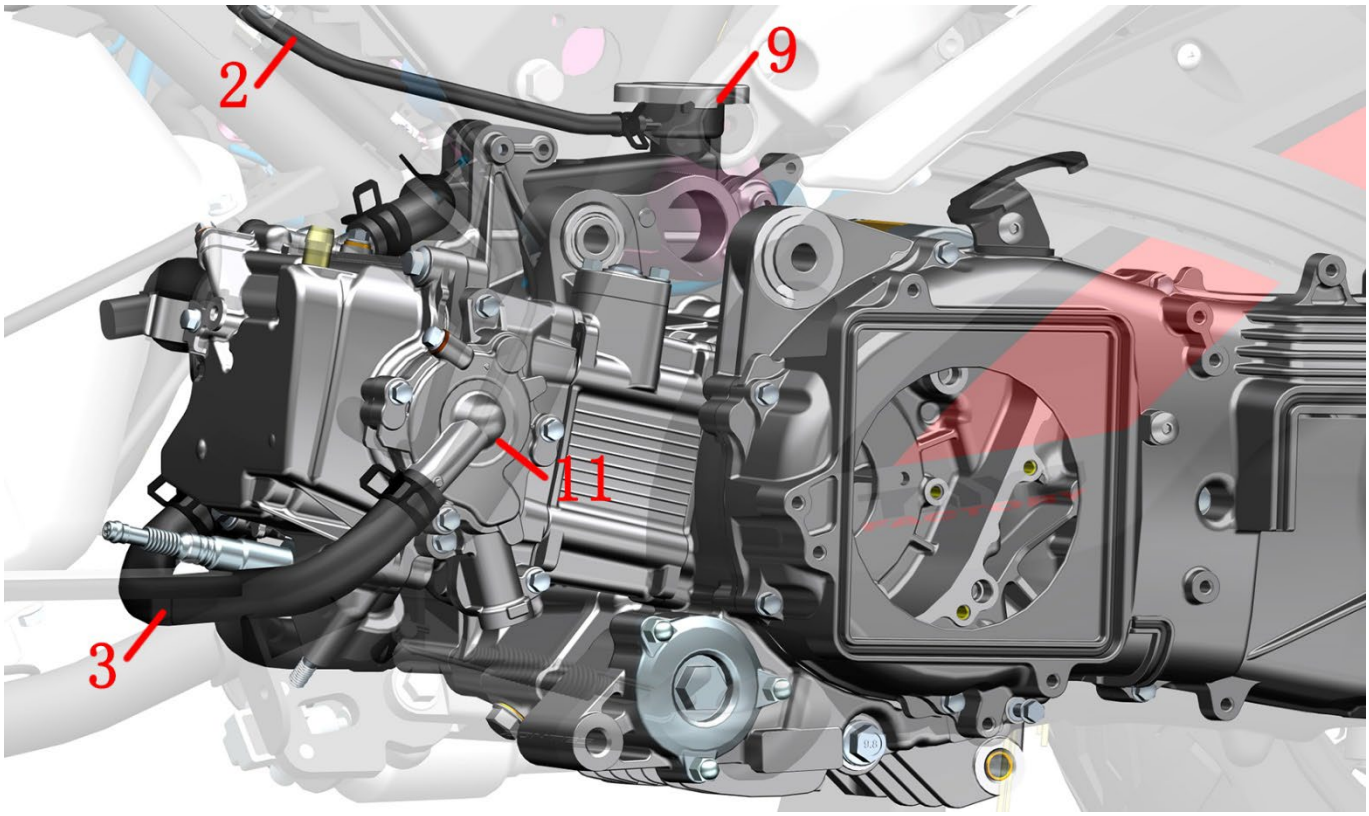

1- Secondary water tank 2-Secondary water tank link pipe 3-Engine inlet pipe 4- Thermostat outlet pipe 5- Thermostat 6- Water tank inlet pipe 7- Water and oil shared sensor 8- Water tank outlet pipe 9- Water tank cover 10- Radiator assembly 11- Water pump cover assembly

M350/368/250

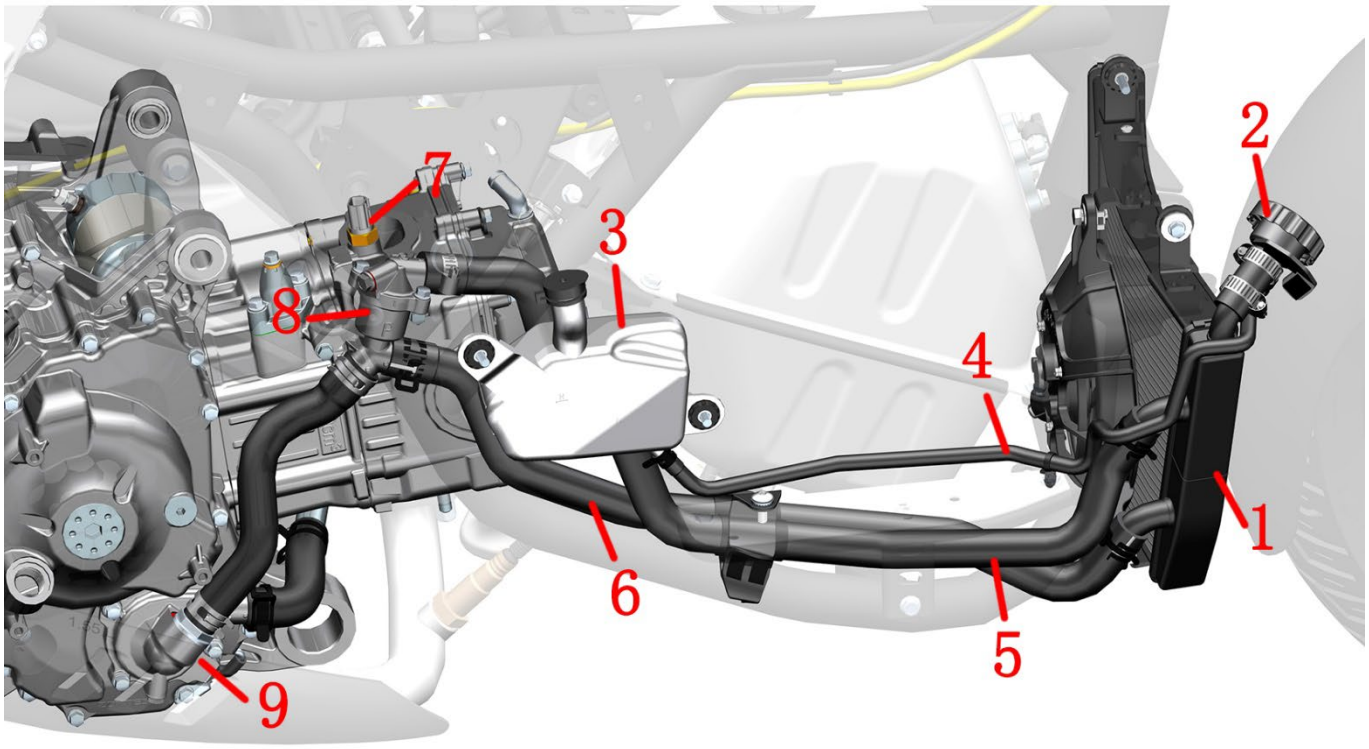

1- Main water tank 2- Water tank filling port 3- Secondary water tank 4- Auxiliary water tank is connected with water pipe 5- Main water tank inlet pipe 6- Main water tank outlet pipe 7- Water and oil shared sensor 8- Thermostat 9- Water pump cover assembly

M155/150

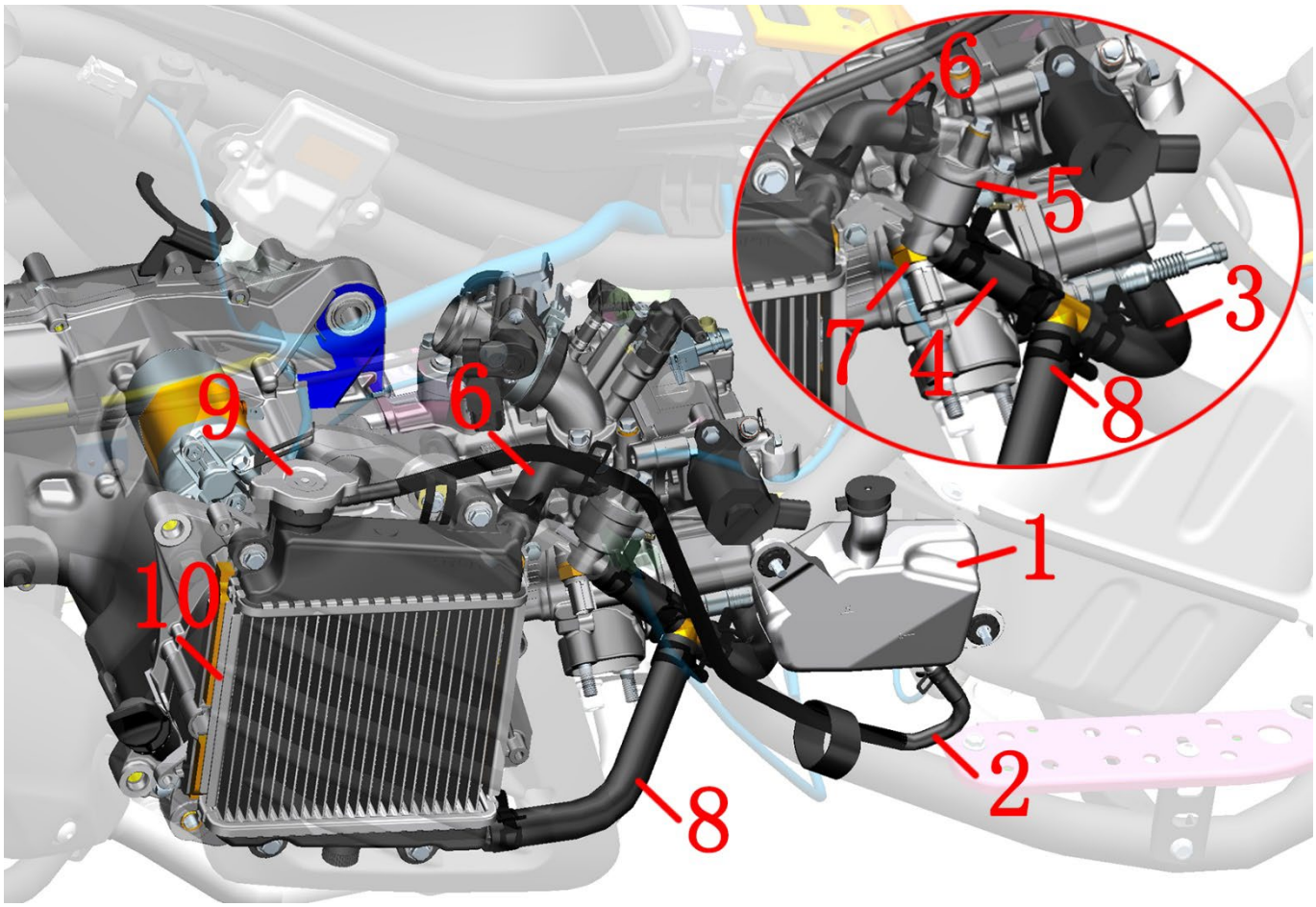

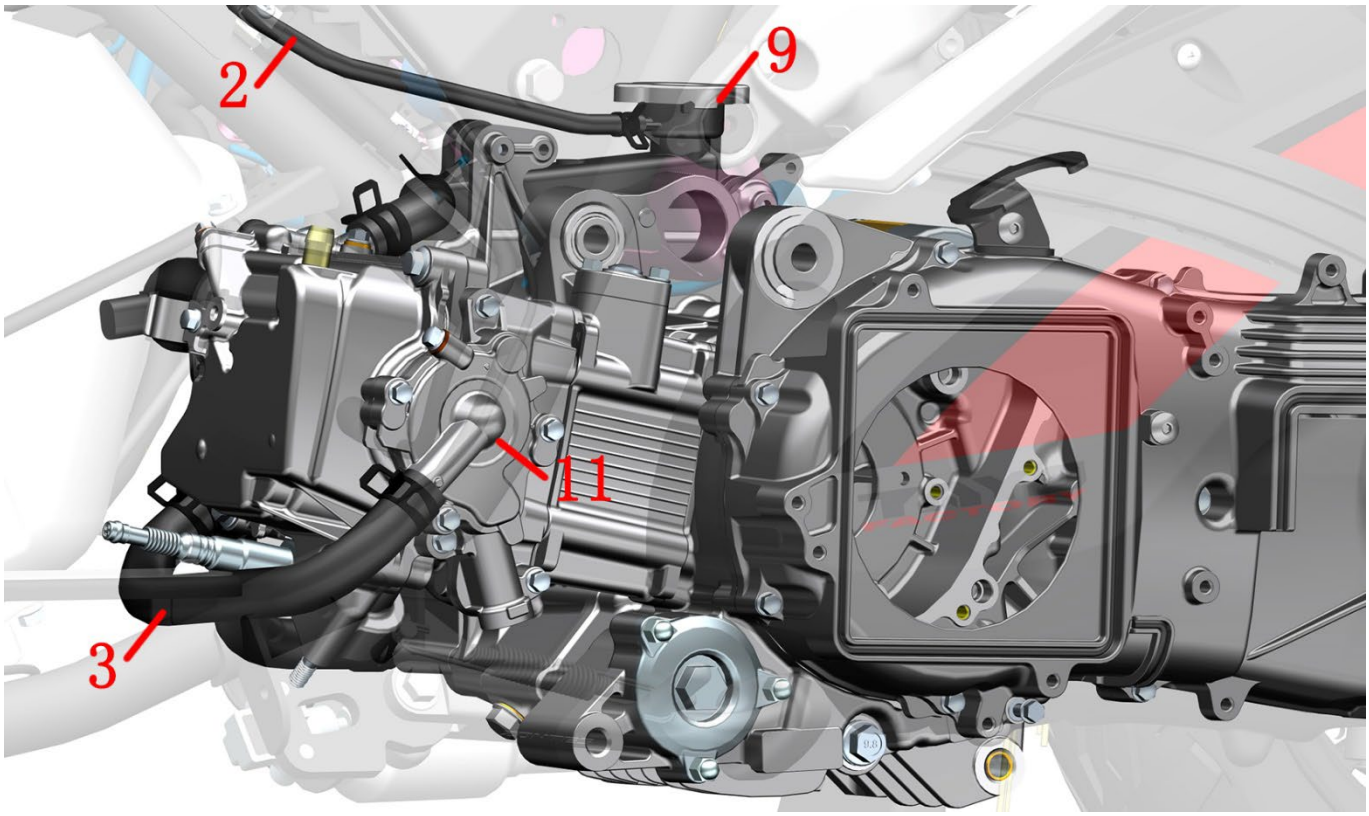

1- Secondary water tank 2- Auxiliary water tank is connected with water pipe 3- Engine inlet pipe 4- Thermostat outlet pipe
5- Thermostat 6- Main water tank inlet pipe 7- Water and oil shared sensor 8- Water tank outlet pipe
9-- Water tank filling port 10- Radiator assembly 11- Water pump cover assembly

M368(ETC)

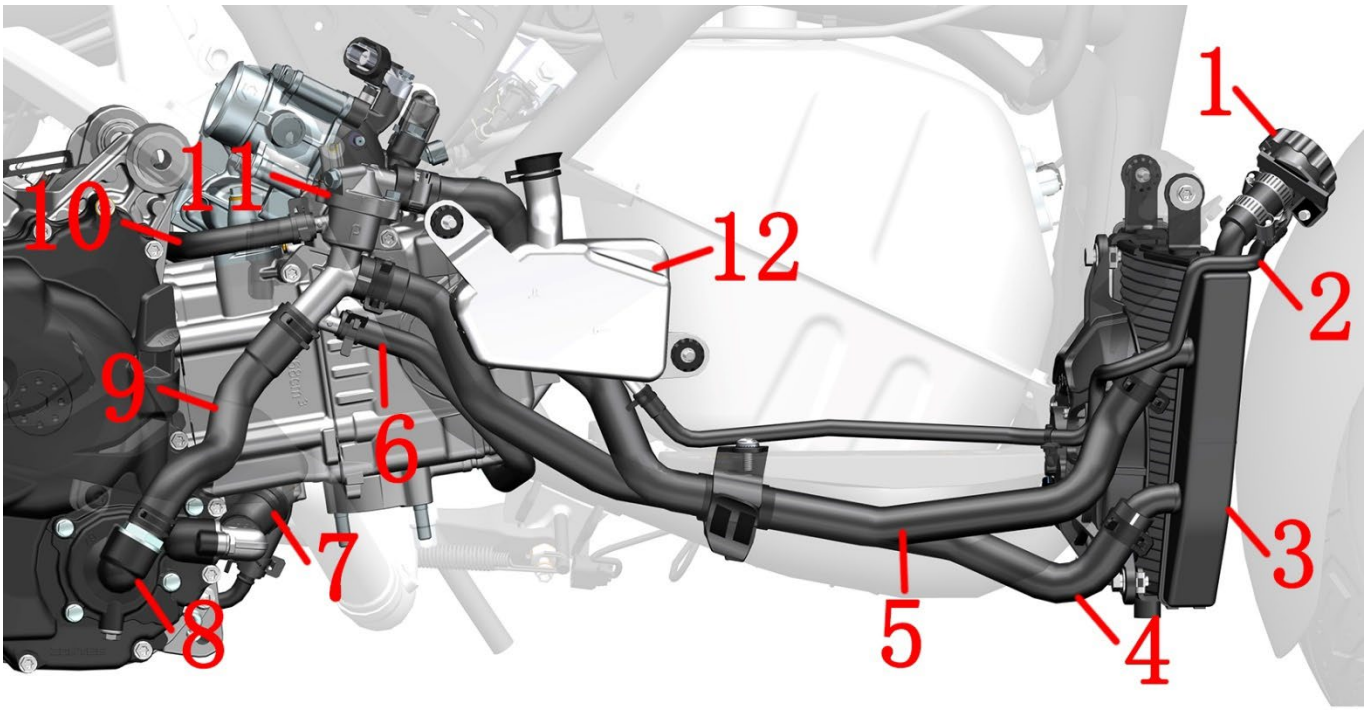

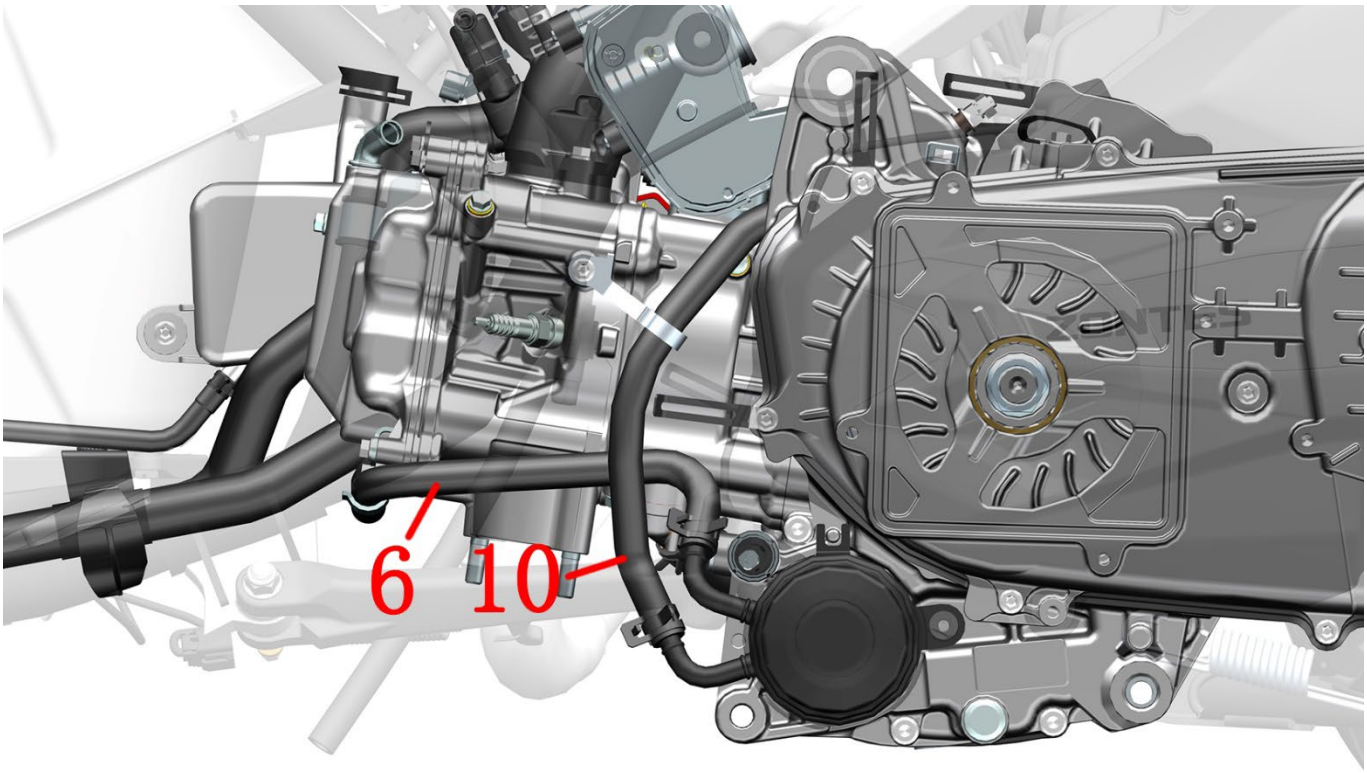

1 - Water tank filler port 2 - Auxiliary water tank connecting water pipe 3 - Water tank 4 - Water tank outlet pipe 5 - Water tank inlet pipe 6 - Oil cooler outlet pipe 7 - Water pump cover outlet pipe 8 - Water pump assembly 9 - Water pump cover inlet pipe 10 - Oil cooler inlet pipe 11 - Thermostat 12 - Auxiliary water tank

Coolant flow diagram

M310

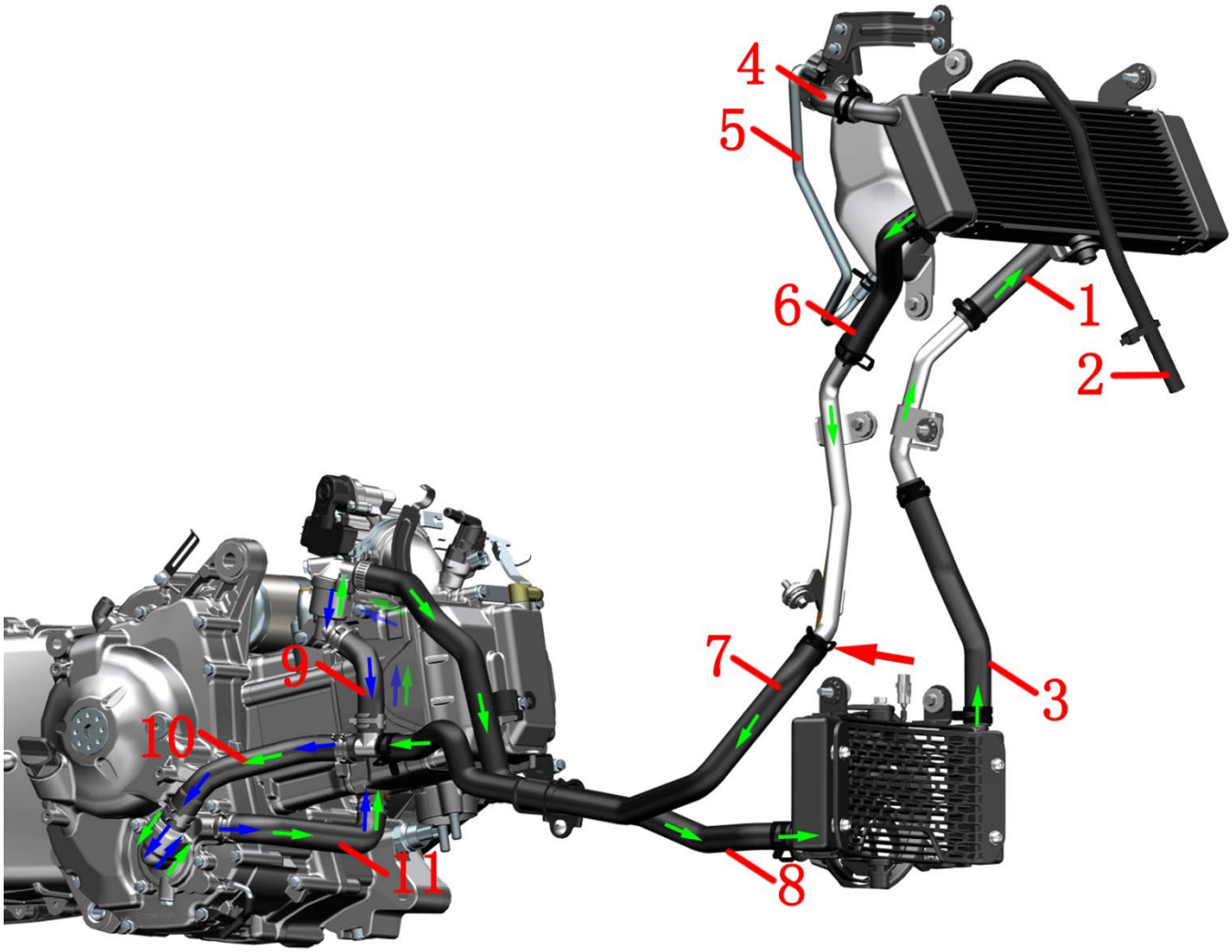

1- Main water tank inlet pipe 2- Leakage pipe 3- Small water tank outlet pipe 4- Water inlet pipe 5- Secondary water tank connection pipe 6 Main water tank outlet pipe 7- Engine inlet pipe 8- Small water tank inlet pipe 9- Small circulation outlet pipe 10-Water pump cover inlet pipe 11-Cylinder inlet pipe

M310 cooling system:
Small loop (indicated by the blue arrow):
Water pump → Cylinder inlet pipe → Cylinder → Thermostat → Small circulation outlet pipe → Water pump cover inlet pipe

Big loop (indicated by the green arrow):
Water pump → Cylinder inlet pipe → Cylinder → Thermostat → Small water tank inlet pipe → Small water tank → Small water tank outlet pipe → Main water tank inlet pipe → Main water tank → Main water tank outlet pipe → Engine water inlet pipe → Water pump cover inlet pipe

Caution:
●The hoop indicated by the red arrow in the figure should face backwards.
●Early production vehicles (produced before mid-March 2021) have different routing of leaky pipes. All the products currently produced come out from the front of the main water tank and are tied to the water tank bracket with cable ties.

M125/155/150

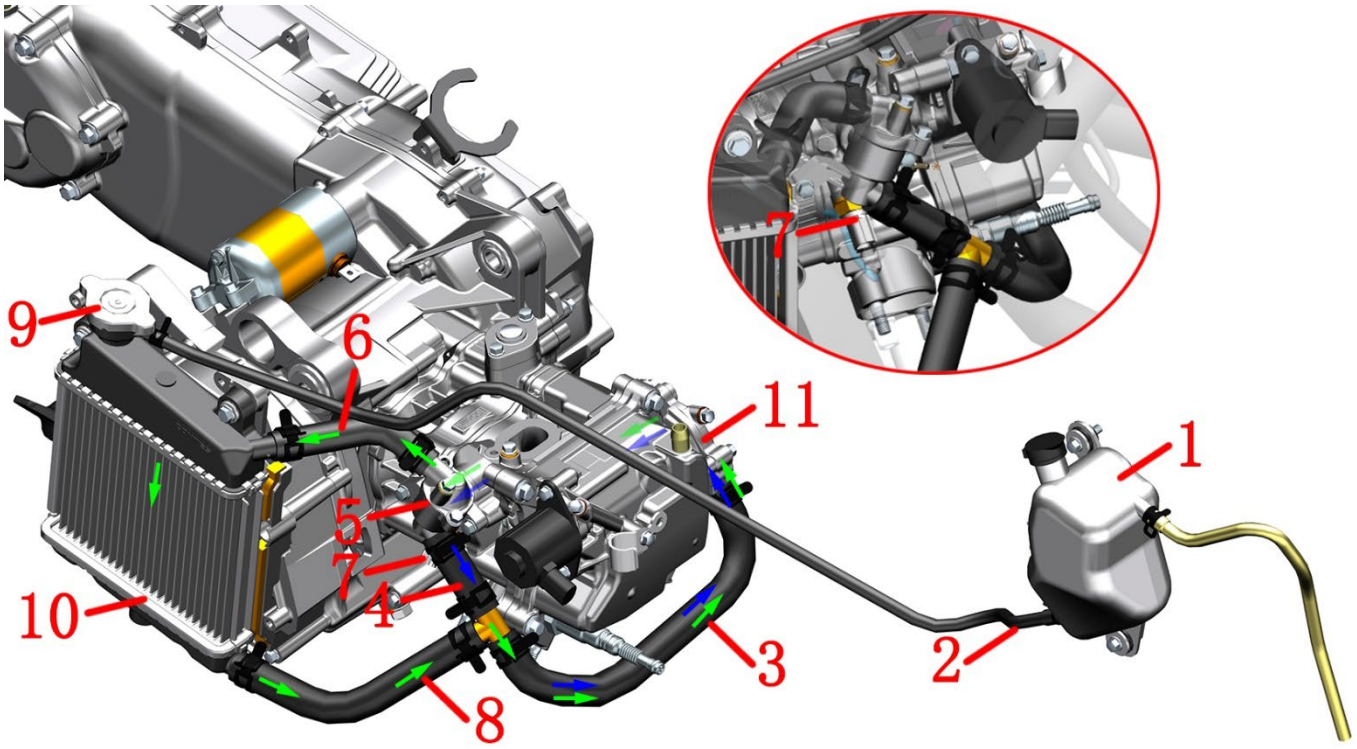

1- Secondary water tank 2-Secondary water tank link pipe 3-Engine inlet pipe 4- Thermostat outlet pipe 5- Thermostat 6- Water tank inlet pipe 7- Water and oil shared sensor 8- Water tank outlet pipe 9- Water tank cover 10- Radiator assembly 11- Water pump cover assembly

M125 cooling system:

Small loop (indicated by the blue arrow):

Cylinder → thermostat → Thermostat outlet pipe → Engine inlet pipe → water pump cover

Big loop (indicated by the green arrow):

Cylinder → thermostat → Water tank inlet → water tank → Water tank outlet pipe → Engine inlet pipe → water pump cover

M350/368/250

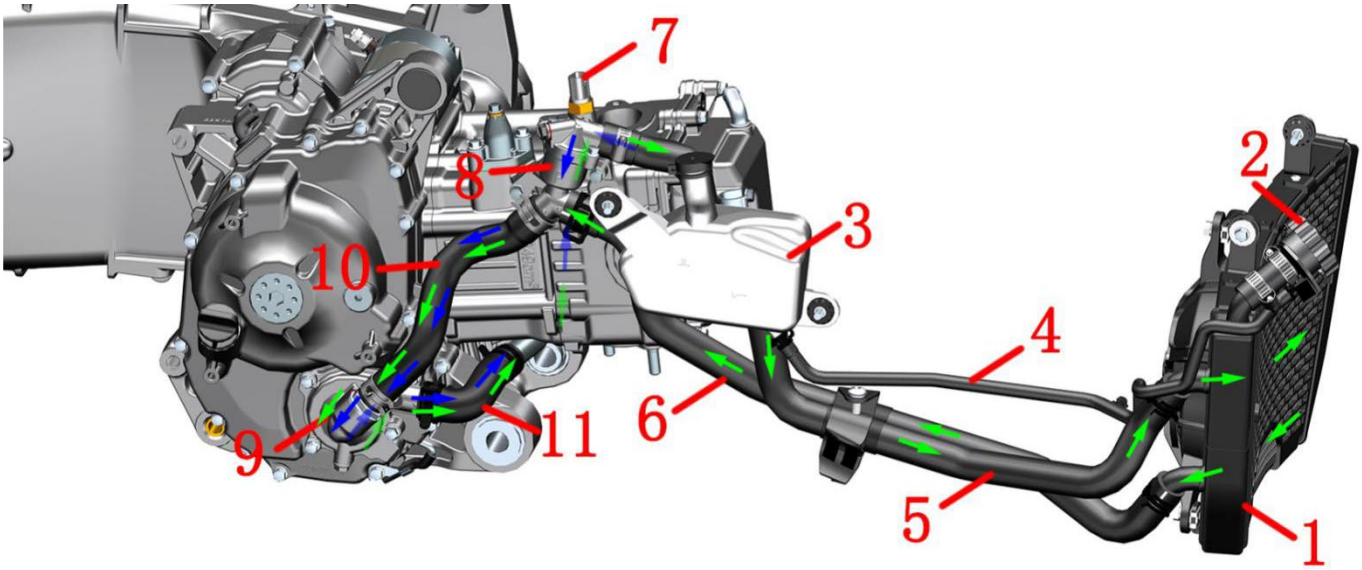

1- Main water tank 2- Water tank filling port 3- Secondary water tank 4- Auxiliary water tank is connected with water pipe 5- Main water tank inlet pipe 6- Main water tank outlet pipe 7- Water and oil shared sensor 8- Thermostat 9- Water pump cover assembly

Small loop (indicated by the blue arrow):

Water pump →Water pump cover outlet pipe→ Cylinder →Thermostat →Water pump cover inlet pipe

Big loop (indicated by the green arrow):

Water pump →Water pump cover outlet pipe→ Cylinder →Thermostat→ Main water tank inlet pipe→ Main water tank→Main water tank outlet pipe→ Water pump cover inlet pipe

M368(ETC)

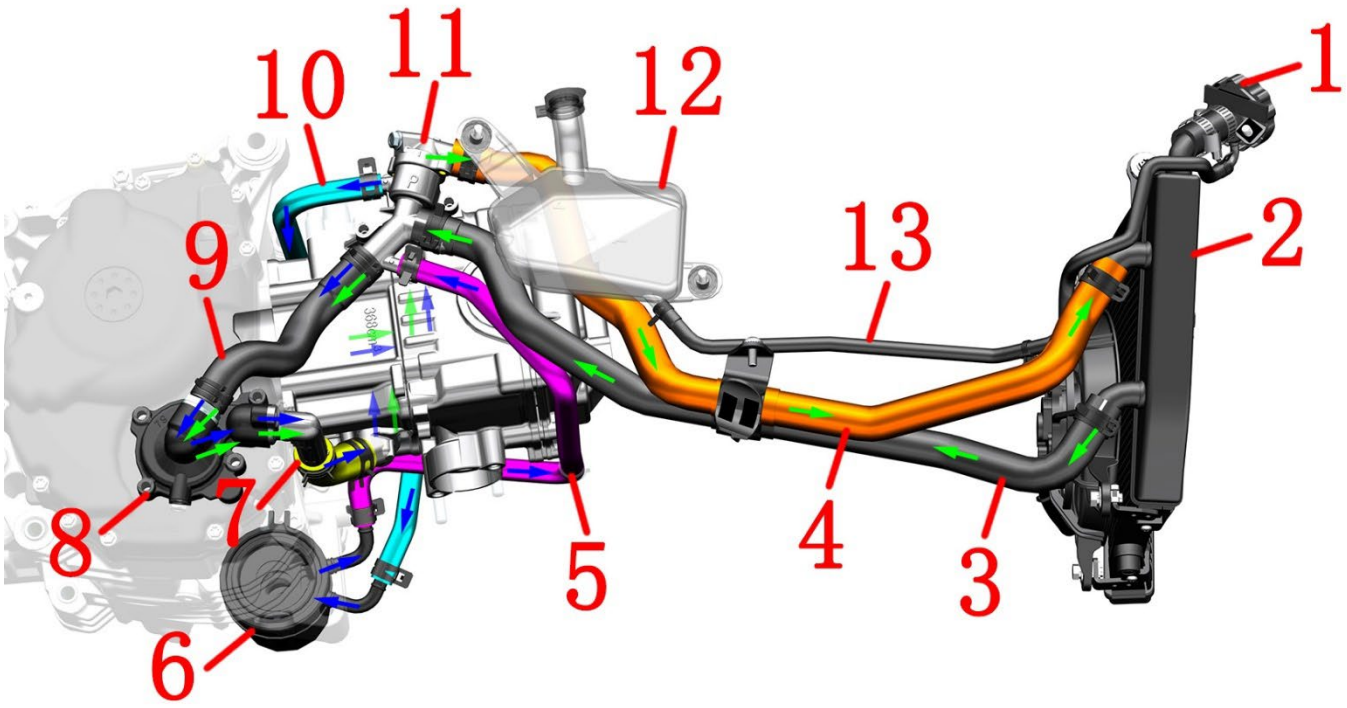

1 - Water tank filler port 2 - Main water tank 3 - Water tank outlet pipe 4 - Water tank inlet pipe 5 - Oil cooler outlet pipe 6 - Oil cooler 7 - Water pump cover outlet pipe 8 - Water pump cover assembly 9 - Water pump cover inlet pipe 10 - Oil cooler inlet pipe 11 - Thermostat 12 - Auxiliary water tank 13 - Auxiliary water tank connecting pipe

M368 (ETC) Cooling System:
Small loop (indicated by the blue arrow):
Water Pump → Water Outlet Pipe of Water Pump Cover → Cylinder → Thermostat → Oil Cooler Inlet Pipe → Oil Cooler → Oil Cooler Outlet Pipe → Water Inlet Pipe of Water Pump Cover
Note: The small cycle is always open, meaning this water circuit still operates when the large cycle starts.

Big loop (indicated by the green arrow):
Water Pump → Water Outlet Pipe of Water Pump Cover → Cylinder → Thermostat → Main Water Tank Inlet Pipe → Main Water Tank → Main Water Tank Outlet Pipe → Water Inlet Pipe of Water Pump Cover

Cooling system disassembly

Caution:

●Before disassembling, please refer to the steps of discharging the cooling liquid in the cooling system section of the "Maintenance" chapter to drain all the cooling liquid first.

●Wear protective measures such as waterproof gloves and protective glasses during disassembly, and prevent the coolant from contacting the skin.

●The disassembly operation must be performed after the engine, radiator, and muffler are completely cooled.

M310 Remove the radiator assembly

a. Use 4# inner hexagon to remove M6×16 bolt(1), water pipe limit bracket(2) will not be removed temporarily. Use a 10# sleeve to remove the M6×12 bolt(3), and separate the water pipe fixing bracket(4) from the limit bracket(2).

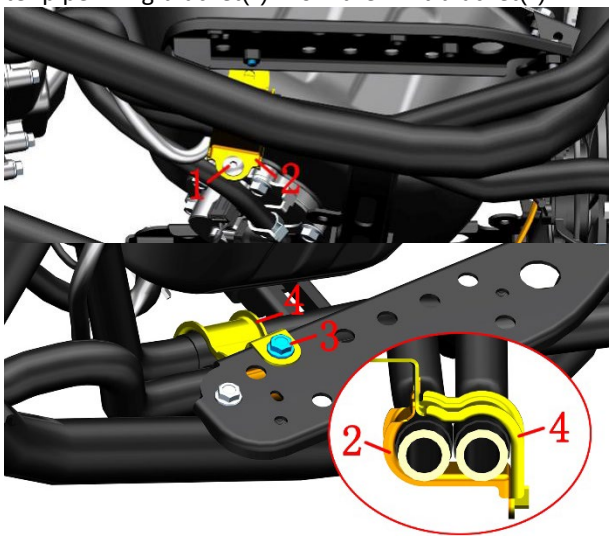

b. Place the oil pan underneath, clamp the hoop with hoop pliers and move it about 40mm (1.6 in) in the direction of the arrow. Wear waterproof gloves with both hands and separate the engine water inlet pipe from the tee joint. Use a flat-blade screwdriver to loosen the clamp and move it about 40mm (1.6 in) in the direction of the arrow, and separate the inlet pipe of the small water tank from the thermostat. Use an oil pan to receive the coolant that may remain in the pipe.

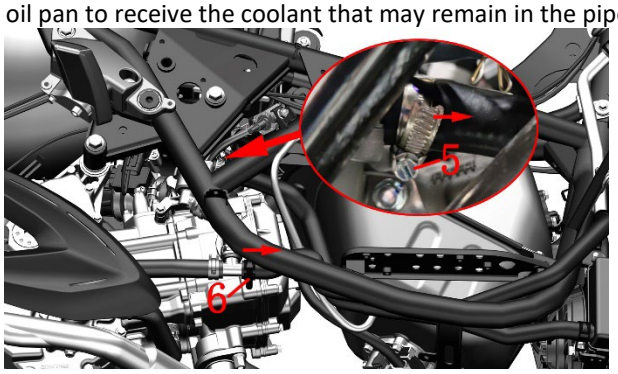

c. Press the buckle indicated by the arrow to pull out the plug of the cooling fan of the small water tank.



d. Use an 8# sleeve to remove the 3 M6×22 bolts shown in the figure.

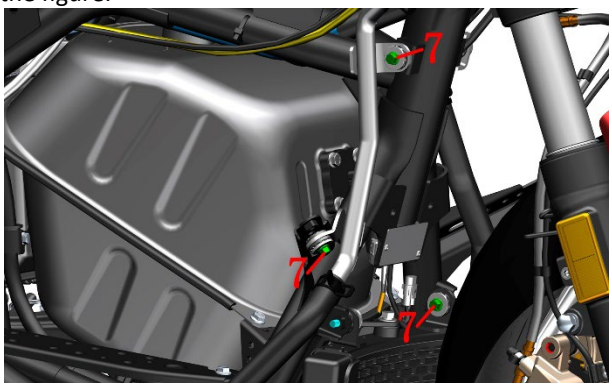

e. Use an 8# sleeve to remove one M6×22 bolt that fixes the aluminum water inlet pipe; fix two M6×30 bolts on the upper left side of the main water tank and the upper right side of the small water tank.

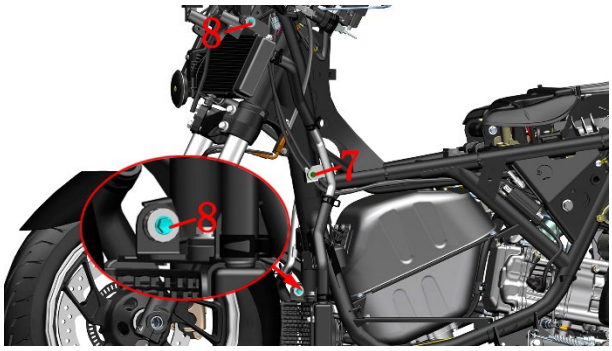

f. First open the black rubber cover of the auxiliary water tank, grasp the auxiliary water tank connecting water pipe with one hand, and use the hoop clamp to remove the ϕ9 hoop in the direction of the arrow, then slowly lower the water pipe while catching the drain with the oil pan. Coolant. Use the same method to remove the ϕ10.5 hoop and then pull out the water pipe. Cut the cable tie, and use an 8# sleeve to remove the 2 M6×22 bolts that fix the auxiliary water tank. Remove the auxiliary water tank assembly from the vehicle. Remove the bolts on the right side of the main water tank and the aluminum outlet pipe.

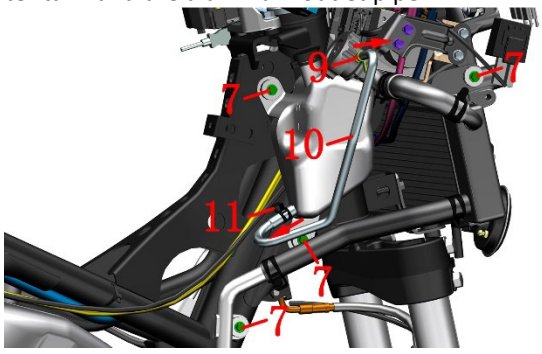

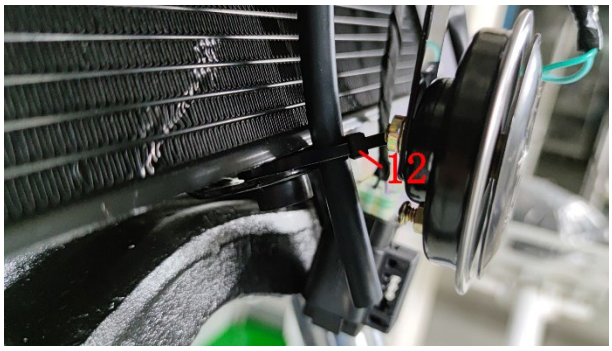

g. Use the hoop pliers to move the ϕ10.5 hoop in the direction of the arrow, and then pull out the leaking pipe. Check whether the auxiliary water tank is damaged.

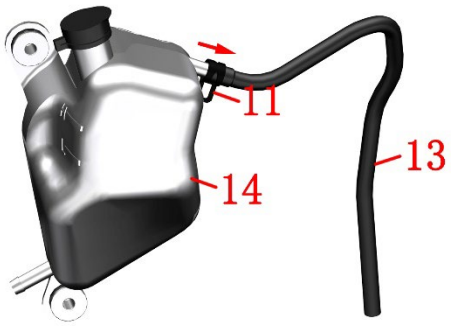

h. Use an 8# sleeve to remove the two M6×12 bolts that fix the water inlet.

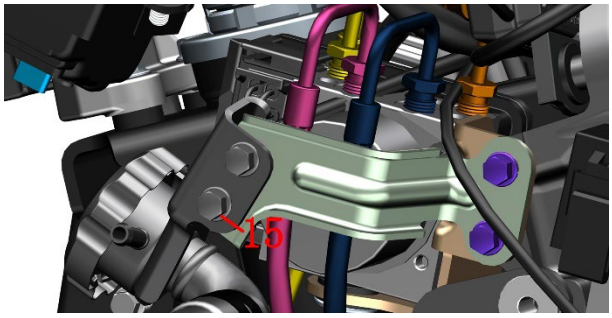

i. Pull out the engine water inlet pipe and the small water tank water inlet pipe, and pull out the water tank assembly to the left. Grasp both sides of the main water tank and pull it up in the direction of the arrow to remove the radiator assembly from the vehicle.

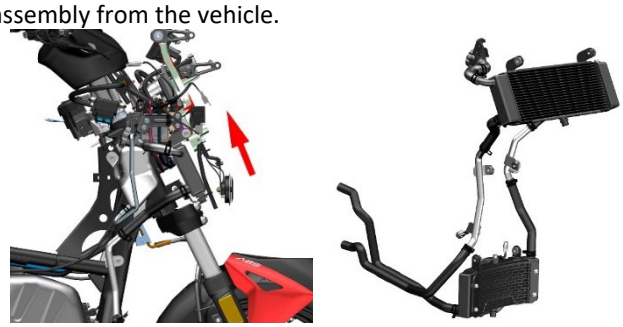

j. If you need to remove the water filler fixing bracket, you can use an 8# sleeve to remove the bolt. Grasp the bracket and use an 8# sleeve to remove the bolt, and remove the lower mounting bracket of the main water tank.

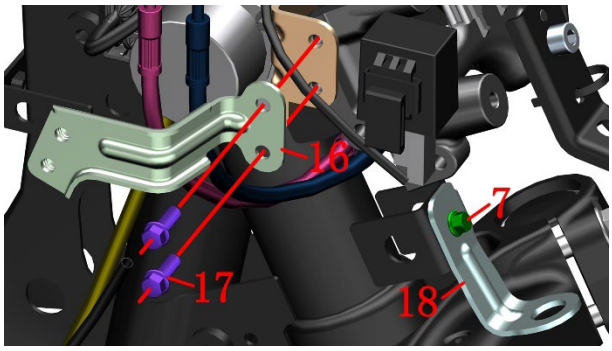

k. After loosening the hoop with hoop pliers, disassemble the radiator assembly. The distribution diagram of each hoop is shown in the figure below.

M310 Coolant system hoop/clamp distribution map

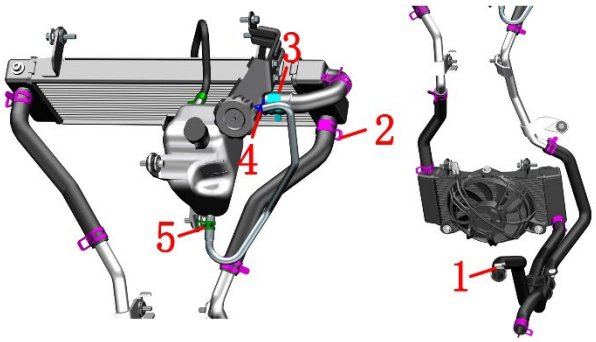

1-Water pipe clamp (ϕ26) 2-Water pipe clamp (ϕ22)*10 3-Water pipe clamp (ϕ26) 4-Water pipe clamp (ϕ9) 5-Water pipe clamp (ϕ10.5)*2

M310 Thermostat assembly and small loop

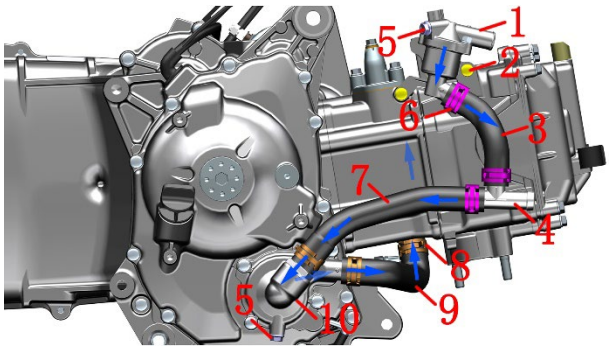

1- Thermostat assembly 2-M6×22 bolt*2 3-Small circulating water pipe 4-Tee pipe 5-M6×12 bolt*2 6-Water pipe hoop (ϕ22)*3 7-Water pump cover inlet pipe 8-Water pipe hoop (ϕ24)*3 9-Cylinder inlet pipe 10-Water pump cover assembly

Caution: The bolt (5) at the thermostat is an exhaust bolt, and the bolt at the water pump cover is a bolt for cooling liquid. There are O-rings of ϕ5.6×ϕ1 at both locations, which need to be replaced once they are disassembled.

a. Use the hoop pliers to remove the hoop(6) and hoop(8), and separate the water pipes(3),(7) and(9) and the three-way pipe. Remove the hoop from the water pipe.

b. Use an 8# sleeve to remove 2 bolts(2), take off the thermostat assembly, and remove the O ring(11) from the thermostat assembly. Once disassembled, O ring(11) needs to be replaced.

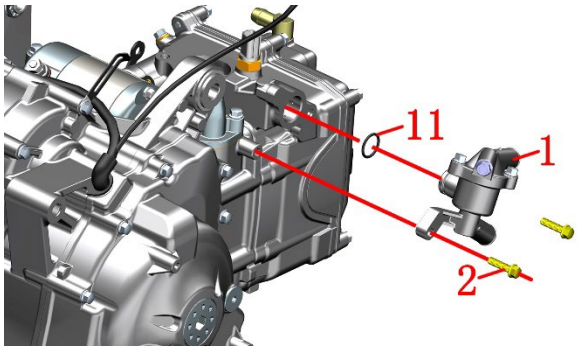

Before reassembly, the joint surface should be cleaned. Note that the O-ring cannot be missing and must be correctly assembled in place. The hoop should be clamped inside the boss to prevent loosening. Bolt(2) Torque: 12±1.5 N.m (1.2±0.2 kgf.m, 9±1 lbf.ft).

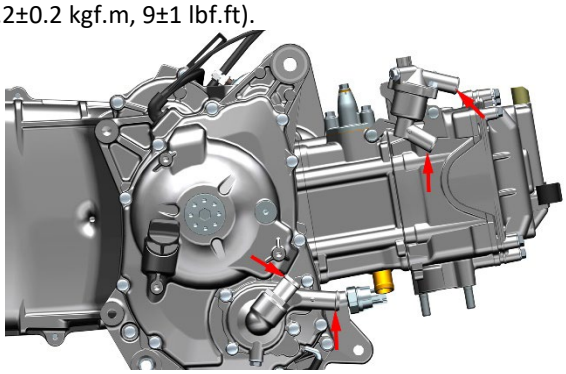

M125 Remove the radiator assembly

Unfasten the rubber wire buckle (1), remove the two M6×22 bolts with an 8# sleeve, and then pull out the auxiliary water tank assembly. Use the hoop pliers to remove the two ϕ10.5 hoops, and then remove the auxiliary water tank leakage pipe (2) and the auxiliary water tank connecting water pipe (6).

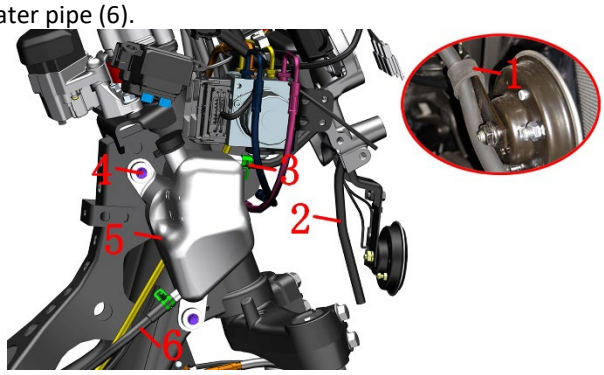

The radiator assembly is assembled on the engine, and the removal steps are detailed in the engine service manual section.

M350/368/250 Remove the radiator assembly

a. After the coolant is discharged, remove the cover first as shown in the figure. Pull out the plug of the cooling fan of the main water tank at the lower left side in the direction of the arrow, press the anti slip snap and then pull out the plug.

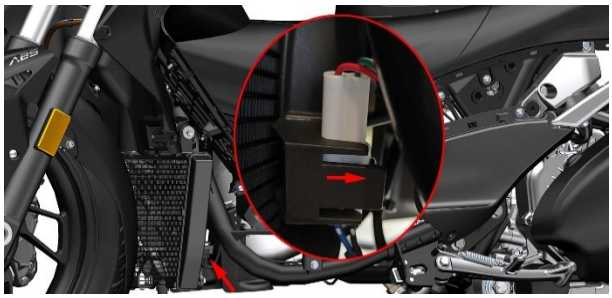

b. Remove the right part of the cover before proceeding to the next step.

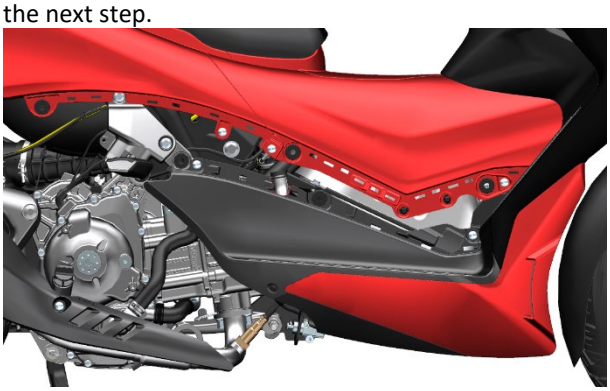

c. Remove the right pedal bolt fixing bolt and turn it over to the back. Remove 2 M6×22 bolt with 8 # socket to take off the right pedal.Place the oil tray at the bottom, hold the ϕ10.5 hoop with the hoop pliers, and then move about 40mm(1.6 in) away from the arrow direction.After both hands wear waterproof gloves, pull out the vice water tank connection water pipe, and use the oil tray to catch the cooling liquid that may remain in the water pipe and the secondary water tank.

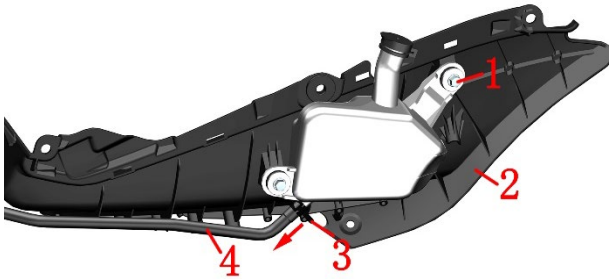

d.Hold the ϕ26 hoop with the hoop pliers and then move it 40mm(1.6 in) in the direction of the arrow to pull out the outlet pipe of the main water tank.



e. Loosen the ϕ26 clamp with a flat-head screwdriver from above and remove it. Remove the water inlet pipe of the main water tank.

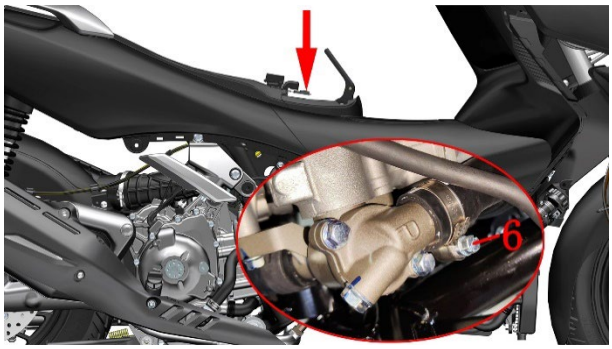

f. Pull the two water pipes out of the water pipe clamp, which is made of plastic, and pay attention to your strength.



g. Use an 8# socket to remove the two M6x22 bolts on both sides and remove the tank assembly.





h. After loosening the hoop with the hoop pliers, disassemble the radiator assembly. See the figure below for the distribution of each hoop.

M350/368/250/368(ETC) Coolant system hoop/clamp distribution map

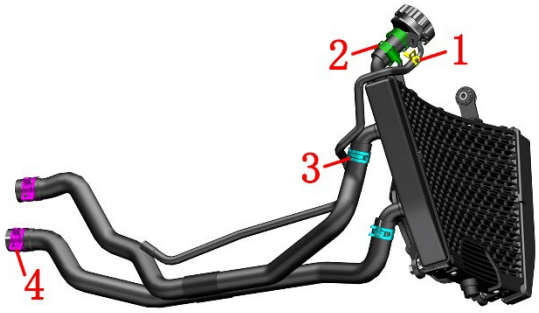

1-Water pipe clamp (ϕ9) 2-Water pipe clamp (ϕ26)*2 3-Water pipe clamp (ϕ24)*2 4-Water pipe clamp (26)*2

M350/368/250/368(ETC) Thermostat assembly and small loop

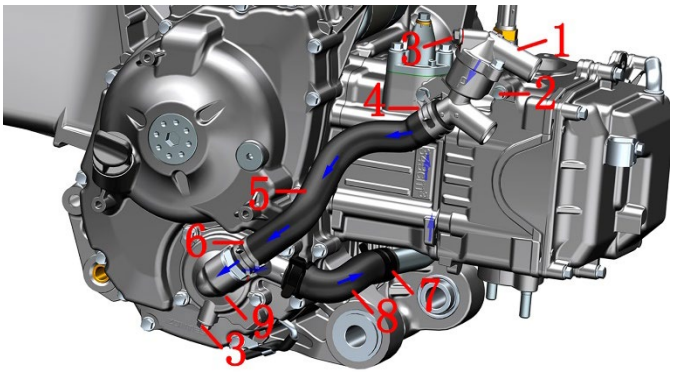

M350/368

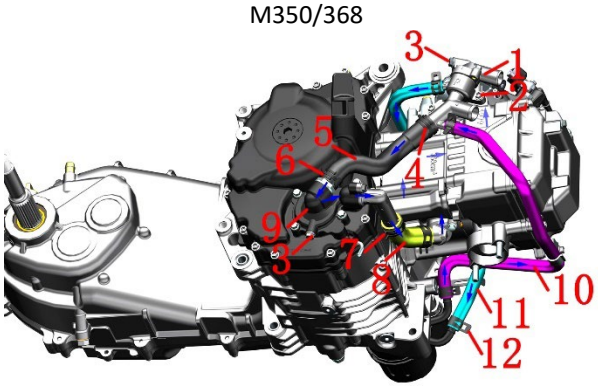

368(ETC)

1- Thermostat assembly 2-M6x22 bolts *2 3-M6x12 bolts *2,4- Water pipe hoop (ϕ25), 5- Water pump cover inlet pipe, 6- Water pump cover hoop (ϕ24), 7- Water pipe hoop (ϕ26) * 2, 8 - Water pump cover outlet pipe, 9- Water pump cover assembly 10 - Oil cooler outlet water pipe 11 - Oil cooler inlet water pipe 12 - Water pipe clamp (ϕ16) * 4

Note: The bolts at the thermostat are exhaust bolts, and the bolts at the pump cover are coolant drain bolts. There are ϕ5.6×ϕ1 O rings in both places, which need to be replaced once removed.

a. Use the hoop pliers to remove the hoop(4) (6) and hoop(7), and separate the water pipes(5) and(8). Remove the hoop from the water pipe.

b. Use the 8# sleeve to remove the 2 bolts (2), remove the thermostat assembly, and remove the 16.5×1.95 O ring from the thermostat assembly. Once removed, the O ring needs to be replaced.

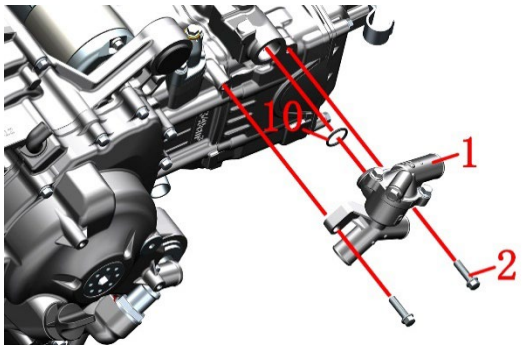

Before reassembly, the joint surface should be cleaned and the O-ring should not be leaky and properly assembled. The hoop should be stuck to the inside of the convex platform to prevent loosening. Torque: 12± 1.5N.m (1.2± 0.2kgf.m,9±1 lbf.ft).

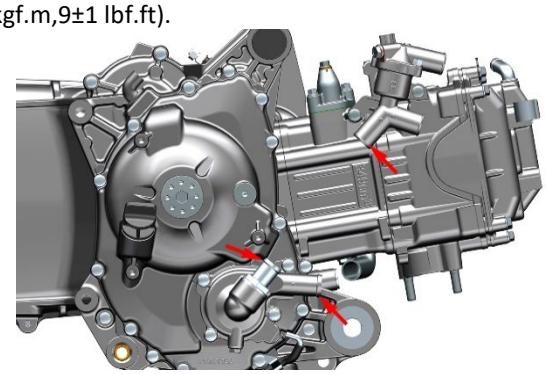

M350/368

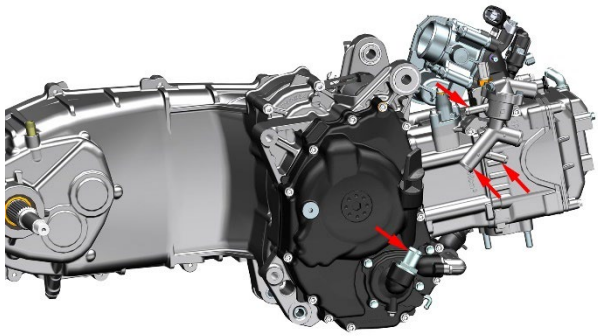

368(ETC)

M155/150

M155/150 Remove radiator assembly

Unscrew the rubber buckle (1), remove 2 M6 × 22 bolts with 8 # sleeve, and take down the auxiliary water tank assembly.Remove two ϕ10.5 hoops with hoop pliers, and remove the leakage pipe (2) of the auxiliary water tank and the connecting pipe (6) of the auxiliary water tank.

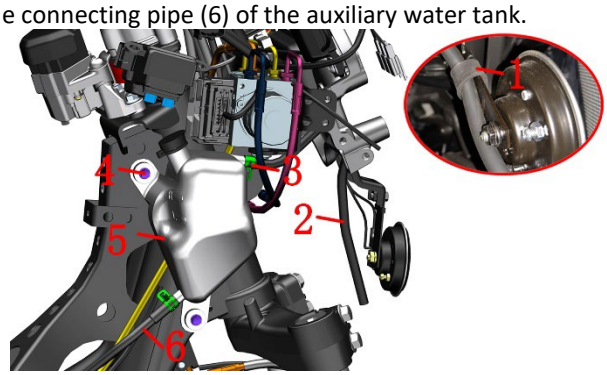

The radiator assembly is assembled on the engine, and the removal procedure is in the engine service manual.

M155/150 Thermostat Assembly and Minor Cycle

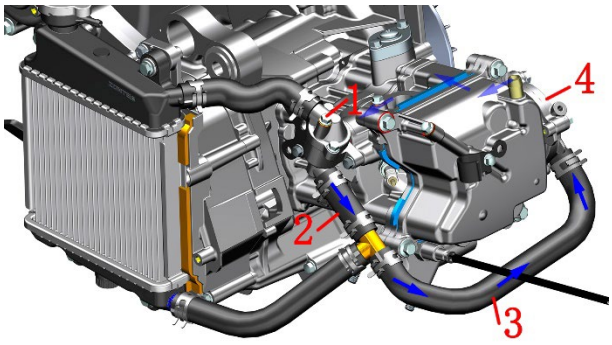

1-Thermostat 2-Thermostat outlet pipe 3-Engine inlet pipe 4-Water pump cover

A. Respectively remove the hoops (1) at both ends of the thermostat with the hoop pliers, and pull out the water pipe from the thermostat. Remove the hoop from the water pipe.

b.Remove 2 bolts (3) with 8 # sleeve, remove the bracket (2), remove the thermostat assembly, and remove the 16.5 × 1.95 O-ring (4).The O-ring shall be replaced once it is disassembled.

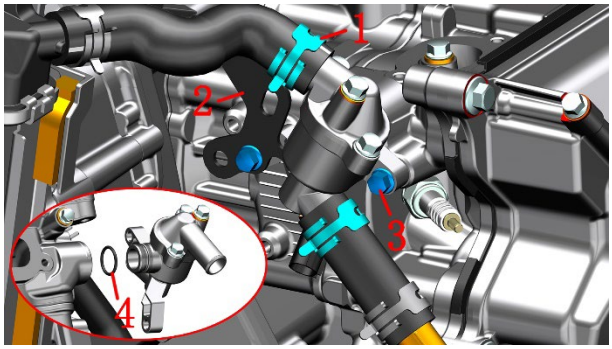

Before reassembly, the joint surface shall be cleaned, and attention shall be paid to the fact that the O-rings shall not be omitted and shall be correctly assembled in place.The hoop shall be clamped inside the boss to prevent loosening. Torque of bolt (2): 12 ± 1.5 N. M (1.2 ± 0.2 KGF. M, 9 ± 1 LBF. Ft).

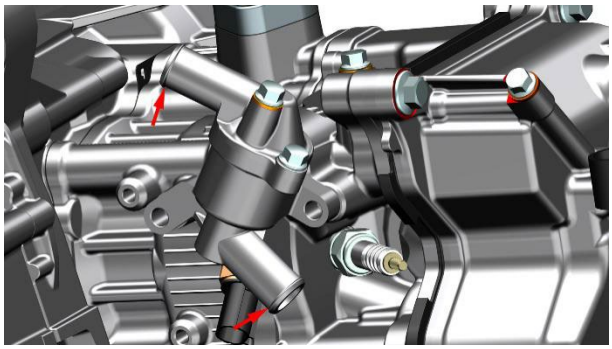

M155/150 Coolant System Clamp/Clamp Distribution



1- Water pipe hoop (ϕ10.9) 2- Water pipe hoop (ϕ9)

Cooling system accessories

Caution:

●Special ventilation tooling (gas pressure reducing valve, air gun, sealing tube) is required for testing.

●After the soaking inspection is completed, the water stains should be wiped clean in time, or use a dust blower to blow dry. If the main water tank and the small water tank are blown dry by blowing dust loose, the wind pressure should not be too large and should be far away from the radiating fins to avoid damage or deformation of the radiating fins.

●Except the gas pressure is specified when doing the air tightness test, the compressed air of 160kPa (1.63 Kgf/cm2, 23.2 psi) shall be introduced, and the parts shall be immersed in water and left for 10s without bubbles. If there are bubbles, the air leaks and needs to be replaced.

●The heat dissipation fins are allowed to have a small amount of lodging deformation. If the lodging area is too large, it will affect the heat dissipation effect, and it is recommended to replace it. A small amount of deformation can be corrected with a small flat-blade screwdriver.

●It is forbidden to use high-pressure water gun or high-pressure air to directly flush or blow the heat sinks of the main water tank and the small water tank.

●Before further testing, check the appearance for signs of leakage. If there is a slight leakage, try to repair it, otherwise it should be replaced.

1. Main water tank

M310

Check whether the cushion rubber is aging and cracked.

Block the A and C ports with a self-made cap, and check the tightness by ventilating from the B port.

Compressed air with lower air pressure can be blown from the back to the water tank from a long distance to clean up foreign objects on the surface. Or use a low-pressure water gun to spray the radiating fins from a long distance to clean up foreign objects on the surface.

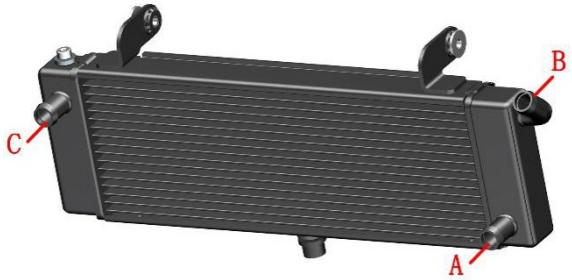

M350/368/250/368(ETC)

Check whether the cushion rubber is aging and cracked.

Block the A and B ports with a self-made cap, and check the tightness by ventilating from the C port.

Check whether the fan and net cover are securely assembled and the rotating fan blades are not stuck. Check whether the buffer is aging and cracked. Check whether the fan cable is damaged.

The fan plug is positive in blue and negative in black. Find a battery with sufficient power and connect the cable to the positive and negative terminals. Check whether the fan draws back.

Compressed air with lower air pressure can be blown from the back to the water tank from a long distance to clean up foreign objects on the surface. Or use a low-pressure water gun to spray the radiating fins from a long distance to clean up foreign objects on the surface.

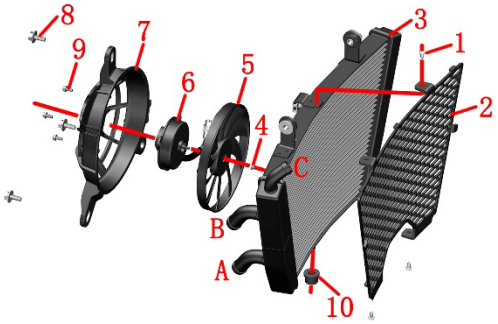

1- Tank front guard screws *3, 2- tank front guard, 3- water tank, 4- fan page nut, 5- fan page, 6- fan motor, 7- Fan guard, 8- fan guard bolts *3, 9- fan motor bolts *3, 10- Buffer glue

2. Attention to the water tank filling port

M310



Caution:

●Special ventilation tooling (gas pressure reducing valve, air gun, sealing tube) is required for testing.

●After the soaking inspection is completed, the water stains should be wiped clean in time.

2.1 Overall leak check

Seal the small tube and ventilate the large tube for air tightness inspection.

2.2 Check of pressure relief valve



Pass 120kPa (1.22 Kgf/cm2, 17.4 psi) compressed air into the big pipe, put the water filler into the water and let stand for 10 seconds. The small pipe should be free of bubbles. Increase the compressed air to 130kPa (1.33 Kgf/cm2, 18.9 psi). Bubbles appear.

M350/368/250

The overall tightness check is consistent with the M310. The inspection method of pressure relief valve is the same. The gas pressure is 100 kPa (1.02Kgf /cm2, 14.5 psi), and there is no bubble, while the gas pressure is 110kPa (1.12Kgf /cm2, 16 psi), and there are bubbles.

3. Auxiliary water tank



First check whether the rubber cover is aging and cracked, if any, replace it. If the appearance is good, then check the air tightness.

Seal the two small water outlets and open the black plastic cover of the water tank for air tightness inspection.

Continue to seal the small water outlet, fill the auxiliary tank with water and turn the auxiliary tank upside down, and observe whether the rubber cover of the water tank seeps. If there is seepage, it is unqualified. Pour out the water after checking the tightness, remove the plug and let the auxiliary water tank dry naturally or blow it dry with a dust blower.

4. Aluminum inlet pipe and aluminum outlet pipe(M310)

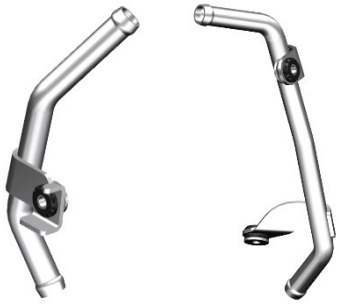

Check whether the weld is cracked or cracked; check whether the buffer rubber is aging and cracked. If the appearance is good, then check the air tightness.

Seal one end and ventilate from the other end to check air tightness.

5. Small water tank(M310)

Check whether the fan and net cover are firmly assembled, and there should be no jamming of the rotating fan blades. Check whether the cushion rubber is aging and cracked. Check whether the fan cable is damaged.

Seal one water outlet and ventilate from the other end for air tightness inspection.

The blue of the fan plug is the positive pole, and the black is the negative pole. Find a battery with sufficient power and connect the wires according to the positive and negative poles, and check whether the fan draws air backwards.

Compressed air with lower air pressure can be blown from the back to the water tank from a long distance to clean up foreign objects on the surface. Or use a low-pressure water gun to spray the radiating fins from a long distance to clean up foreign objects on the surface.

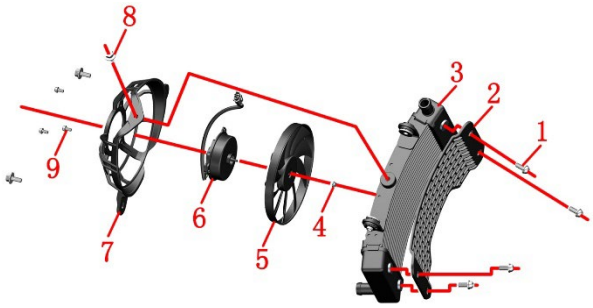

1-Water tank front guard bolt*4 2-Water tank front guard 3-Water tank 4-Fan nut 5-Fan 6-Fan motor 7-Fan Guard 8-Fan Guard Bolt*3 9-Fan Motor Bolt*3

6. Water and oil shared sensor

For details on sensor detection and disassembly methods, please refer to the section "Electronic Injection System" chapter EFI Parts Fault Diagnosis and Elimination.

7. Thermostat

7.1 Inspection

●The M125/350/155/368/150/250/368(ETC) steps are similar to the M310, taking the M310 as an example.

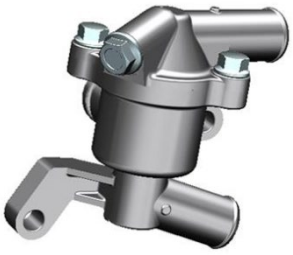

Check the appearance for damage and leakage.

Simple test method (test on the whole vehicle):

After the cold car is started, immediately open the water filler cap. If there is no fluctuation in the liquid level, the thermostat is normal, otherwise it is abnormal. Check that when the water temperature is lower than 70°C (158 F), the thermostat should be in a closed state. When the temperature is higher than the initial opening temperature, the expansion valve of the expansion cylinder will gradually open, and the circulating coolant in the radiator will begin to flow.



After the temperature rises, check the inlet pipe of the small water tank. You should be able to clearly feel the signs of water flow or the temperature of the pipe wall, otherwise the pump or waterway will be blocked.

When the temperature reaches 80°C (176 F), the heating rate slows down, and the thermostat works normally. If the water temperature has been rising rapidly, when the internal pressure reaches a certain level, the sudden overflow of boiling water indicates that the valve is stuck.

If it is stuck or closed loosely, it can be removed and cleaned or repaired first, otherwise it should be replaced.

7.2 Failure phenomenon

When the water temperature gauge indicates high, the engine temperature is overheated, but the coolant temperature in the water tank is not high, it is not hot when touching the radiator by hand, and the small water tank fan rotates normally. It indicates that the big circulation is blocked or blocked, which can be preliminarily judged as abnormal thermostat.

There are generally two cases of abnormal thermostat:

a. The main valve is closed for a long time, and the coolant is circulated in a small circulation route regardless of the water temperature, which causes the engine to overheat.

b. The main valve is in the open state for a long time, and the phenomenon is that the water temperature rises slowly when starting, especially in winter, the slow rise of the coolant temperature makes the engine not work at the normal temperature, and the engine temperature is too low.

7.3 Disassembly

Checking method of thermostat assembly:

Seal the two ports, pass in compressed air of 181 kPa (1.85 Kgf/cm2, 26.3 psi) from the other port, put it in the water and let it stand to see if there are bubbles, if there is leakage.

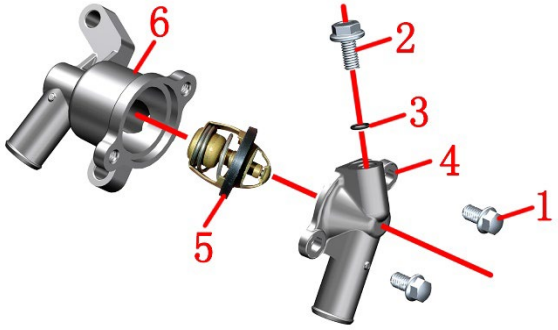

1-M6×10 bolt*2 2-M6×12 bolt 3-ϕ5.6×ϕ1O ring 4-thermostat upper shell 5-thermostat core 6-thermostat lower shell

7.4 Thermostat core inspection

Check the opening temperature, full opening temperature and lift of the main valve in the thermostatic heating equipment with adjustable temperature. If one of them does not meet the specified value, it should be replaced. Or use a thermometer, water, heater, and container to test.

The initial opening temperature of the thermostat is 80～84℃ (176～183 F), and the core moving 0.1mm (0.004 in) can be regarded as the initial opening. The full opening temperature is 95°C (203 F), and the core movement is greater than 3.5mm (0.14 in).

The simple test method is to put the core body into a high temperature resistant container, pour it into boiling water and soak for a period of time, take out the core body with pliers, and observe whether the valve can be fully opened. Until all closed.

The joint surface should be cleaned before rematching, and no O-ring should be installed.

8. Water pipe

Check whether there are cracks, bulges and other defects on the surface of each water pipe. Block one end of the water pipe, ventilate the other end and put the water pipe into the nozzle to check if there is any air bubbles, if any, replace it.

9. Check the water pump cover assembly(M310)

Check the two points indicated by the arrows for leakage. The bolts are for cooling liquid bolts. If there is leakage, remove the bolts and replace the O-ring. If there is leakage at the leaking pipe of the right crankcase cover, you can try to remove the leaking pipe (because the sealant is applied before press-fitting, it is difficult to pull out), clean it up, reapply the sealant and reinstall it; or directly replace the right crankshaft Box cover assembly.

A small amount of coolant leaking from the leaking pipe is normal. If the engine is running continuously, it is abnormal. The water pump cover needs to be disassembled to check whether the seal has failed.

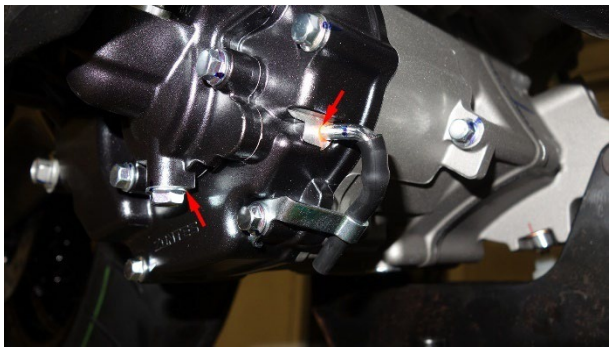

M310

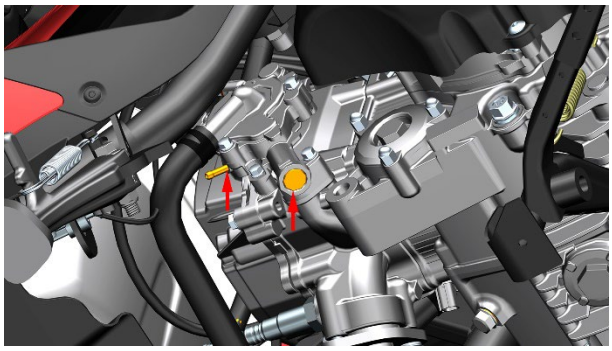

M125



M350/368/250/368(ETC)

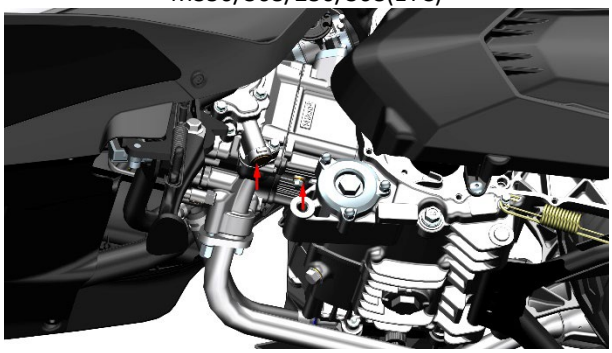

M155/150

8. Braking system

Know Before Service

1. The content of this chapter requires certain maintenance experience. It is recommended to check or repair with a qualified maintenance organization.
2. Frequent inhalation of the dust generated by the brake pads, regardless of the composition, may have a certain impact on health. Avoid breathing dust particles.
3. Do not use a blow gun or brush to clean the brake assembly, but a vacuum cleaner.
4. Avoid dripping the brake fluid on the paint surface of the cover or the surface of the parts. If it is accidentally splashed, it needs to be rinsed with water immediately.
5. When disassembling the front disc brake main pump and the rear disc brake main pump, make sure that the brake fluid in the oil cup is in a horizontal position. Do not turn it upside down to prevent air from entering, which will affect the braking effect. In severe cases, it may cause the brake to fail and cause personal injury.
6. The steps for replacing brake fluid and exhausting air are the same. For detailed steps, see the section on brake fluid in the "Maintenance" chapter.
7. When the brake pads or brake discs have oil stains, the braking force will be reduced. The contaminated brake pads should be replaced, and the oil stains on the brake discs can be removed with a good-quality degreasing cleaner.
8. After removing the oil cup cover of the main pump, prevent dust and water from entering.
9. If you need to add brake fluid after maintaining the brake system, you must use the newly opened DOT4 brake fluid. Do not mix with other brake fluids.
10. Switch to unplug the ABS hydraulic control unit when the vehicle is powered on. Excessive voltage may damage the hydraulic control unit. The entire vehicle must be powered off before maintenance.
11. The hydraulic control unit is a precision part, and it is forbidden to disassemble it by non-professionals.

Tool：

Tool	Torque Wrench
	

DANGER

●If you accidentally swallow the brake fluid, you should contact the poison control center or hospital immediately; if you accidentally get the brake fluid into your eyes, rinse with water and seek medical attention immediately.
●Brake fluid must be kept away from children and pets.
●The vehicle must be parked on a flat and stable ground or a lifting platform.

WARNING

●Wear protective gloves/protective clothing/protective goggles/protective masks to maintain the brake system.
●It is strictly forbidden to directly flush the main pump with high-pressure water.

Trouble shooting

Soft feeling from brake lever

a. The brake system oil circuit enters the air
b. Brake fluid leakage
c. The brake pads or brake discs have oil stains
d. Wear of brake caliper or disc drive main pump piston seal ring
e. Brake pads or brake discs are worn
f. The disc brake caliper is oily
g. The main pump of the disc brake is oily
h. The disc brake caliper does not slide flexibly
i. Insufficient brake fluid
j. The brake oil circuit is not unblocked
k. Brake disc is twisted and deformed
l. Wear and stickiness of disc brake caliper piston
m. The piston of the disc brake main pump is worn and sticky

Hard feeling from brake lever

a. The brake oil circuit is blocked
b. The piston of the disc brake caliper is worn and sticky
c. The piston of the disc brake main pump is worn and sticky
d. The disc brake calipers cannot slide normally
e. Wear of brake caliper or disc drive main pump piston seal

Disassemble the disc brake main pump and calipers

Caution:

●The protective measures and brake fluid hazards have been explained before, so I won't repeat them here.
●The two copper pads at the brake hoses of the disassembled calipers and the main pump must be replaced to avoid leakage. The surface of the disc brake oil pipe bolt and the copper pad can be reused if there is no scratch.
●Disassembling the main pump and calipers requires high hands-on ability, and it is recommended to be carried out by professional personnel or maintenance organizations. The replaced brake fluid should be recycled by a professional unit and properly disposed of.
●The operator is responsible for the consequences caused by manual disassembly or improper assembly, and is not within the scope of the three guarantees.
●Operate in a dry, dust-less or dust-free environment.
●The M125/350/155/368/150/250/368(ETC) steps are similar to the M310, taking the M310 as an example.

Disassemble the front disc brake main pump

a. Remove the cover according to the steps in the removal direction in the "Front Fork Assembly" of this manual.

b. Use a 12# sleeve to loosen the disc brake oil pipe bolt(1), pay attention to loosen it and then tighten it slightly without leakage, otherwise it will be more difficult to loosen this bolt later. Grasp the mirror rod of the right rear view mirror, use a 13# sleeve to remove the nut④, remove the small washer③, spring②, and large washer①, and take off the rear view mirror. When reassembling, make sure that the small washer③ is aligned with the side plane of the mirror rod bolt.

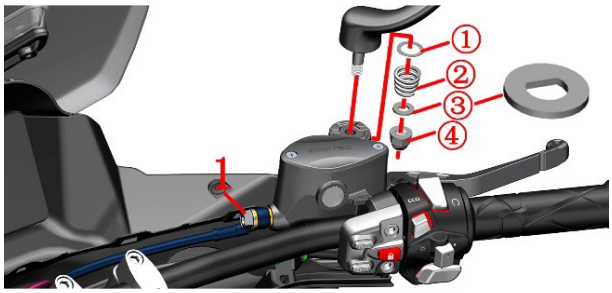

c. After grasping the front brake main pump, remove the 2 bolts (2) with a 5# inner hexagon, and remove the right auxiliary switch.

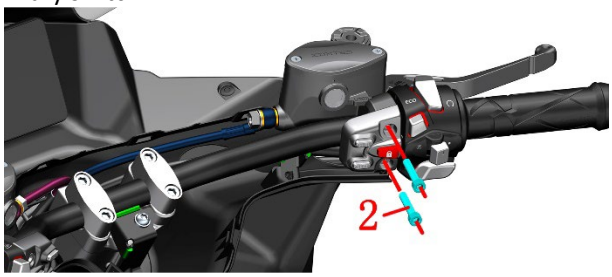

d. Tilt the front brake main pump so that the bolt(1) faces upward, wear waterproof gloves and use a 12# sleeve to remove the bolt(1), remove the copper pad(3), remove the FMC-HU oil pipe, and remove the brake fluid in the main pump. Pour out. Bolt(1) Standard torque: 32N.m (3.3kgf.m, 24 lbf.ft).



e. Refer to the steps of adding brake fluid to remove the upper cover; refer to the steps of removing the brake switch and brake handle to remove.

f. Disassemble the front disc brake main pump

"a". is the oil window assembly that cannot be disassembled unless necessary; "b" is the ϕ0.5 oil hole; "c" is the ϕ3 pressure relief oil hole.

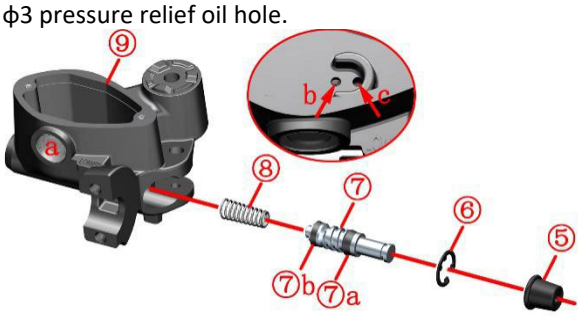

⑤Dust cap⑥Retaining ring⑦Piston assembly (⑦a outer seal ring⑦b inner seal ring)⑧spring⑨main pump housing

Diesel or kerosene can be used to clean the brake fluid to facilitate the next step of decomposition. If the oil hole is blocked, use a dust blower or a small needle tool to clear it. After decomposition, use a soft lint-free brush to clean up all parts. It is not recommended to use a dust blower for drying. The air compressor with poor drying or filtering effect may blow dust, moisture or other debris into the main pump housing that has been cleaned through the blower; high vacuum can be used Vacuum cleaner. Before assembling the piston assembly and spring, apply a small amount of DOT4

brake fluid, and do not apply other lubricating materials such as lubricating oil, grease or anti-rust oil.

g. Apply an appropriate amount of high-vacuum silicone grease to the outer end of the handle bolt and piston assembly according to the previous requirements for lubricating the movable part of the handle. Refer to the disassembly steps to reinstall, and follow the previous steps to add the newly opened brake fluid and perform the exhaust operation. Note that the copper pad (3) needs to be replaced with a new one to prevent leakage. After the assembly is completed, it is necessary to confirm that the brake has been restored before driving the vehicle.

Disassemble the rear disc brake main pump

The rear disc brake main pump and the front disc brake main pump are mirrored and symmetrical. Please refer to the steps for disassembling the front disc brake main pump for disassembly.

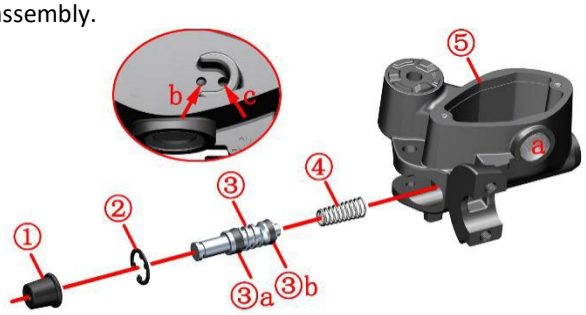

Disassemble the front disc brake caliper M125/310/155/150

a. Use 5# inner hexagon to remove bolt(1), and remove the wire clamp. First use a 12# sleeve to loosen the disc brake oil pipe bolt(4), pay attention to loosen it and then tighten it slightly to avoid leakage, otherwise it will be more difficult to loosen this bolt later. Use 4# inner hexagon to remove bolts (2) and to remove the wheel speed sensor. Use a 14# sleeve to remove the bolt (3). Standard torque of bolt(3): 24N.m (2.4kgf.m, 18 lbf.ft); Standard torque of bolt(4): 32N.m (3.3kgf.m, 24 lbf.ft).

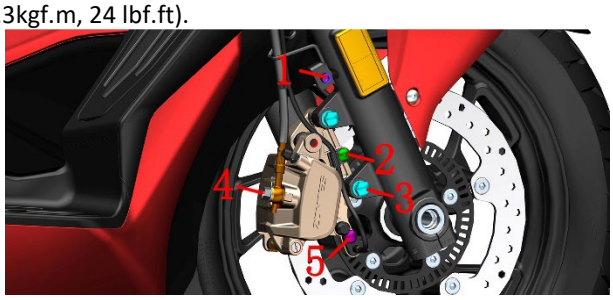

b. After wearing waterproof gloves, loosen the bolt(4) with a 12# sleeve, and turn the caliper upside down so that the head of the bolt(4) is facing down to drain the brake fluid into the oil pan. Remove the bolt(4) and the copper pad and then remove the FC-HU oil pipe. Refer to the brake fluid steps to remove the upper cover of the front disc brake main pump to speed up the discharge of brake fluid.

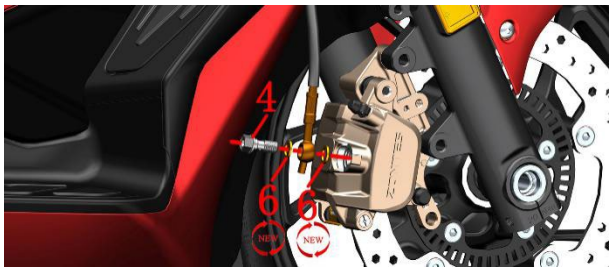

c. Remove the brake pads according to the steps of removing the brake pads

d. Front disc brake caliper disassembly

A dust blow gun can be used to blow in compressed air from the oil pipe bolts to blow out the piston. Pay attention to placing towels or other soft materials on the piston to prevent damage caused by collision between the piston and the caliper mounting plate; and the dust blow gun should be kept away from the caliper body. If the distance is too close, the piston may suddenly fly out and cause damage. Check the piston and caliper cylinder for scratches, damage, pits, etc. Check whether the pin is deformed.

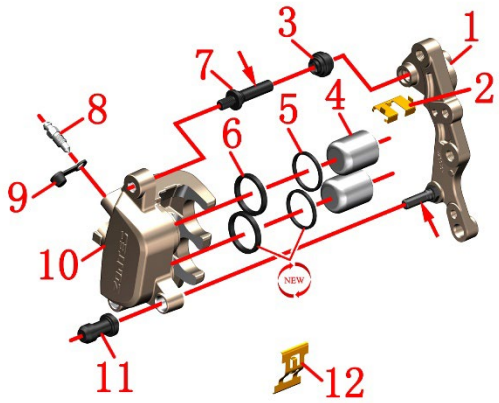

1- Caliper mounting plate 2- Brake pad holder 3- Caliper pin rubber cap 4- Piston 5-dust seal 6-oil seal 7-caliper pin 8-bleed nozzle 9-bleed nozzle rubber cap 10-caliper housing 11-caliper mounting plate pin rubber cap 12-brake spring

M350/368/250/368(ETC)

First use 14# to loosen the tubing bolt without leakage. Then remove two M10×1.5×60 bolts with 8# hex. The standard torque of the bolts is 45 ~ 50N.m(4.6 ~ 5.1kgf.m, 33 ~ 37 lbf.ft). Do not operate the brake handle after removing the caliper.

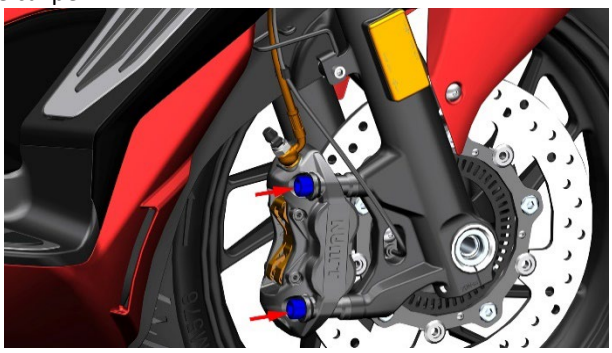

Front disc brake caliper disassembly

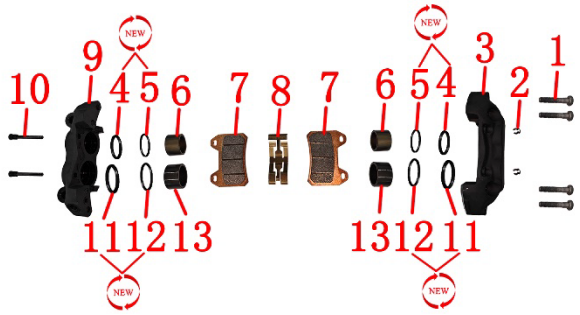

1- Bolt 2- Circlip 3- Inner side caliper housing 4-ϕ30 oil seal 5-ϕ30 dust seal 6-ϕ30 piston 7- Disc brake pad 8- brake spring 9- Out side caliper housing 10-Pin 11-ϕ34 oil seal 12-ϕ34 dust seal 13-ϕ34 piston

A dust blow gun can be used to blow in compressed air from the oil pipe to blow out the piston. Pay attention to placing towels or other soft materials on the piston to prevent damage caused by collision the piston; and the dust blow gun should be kept away from the caliper body. If the distance is too close, the piston may suddenly fly out and cause damage. Check the piston and caliper cylinder for scratches, damage, pits, etc. Check whether the pin is deformed.

Caution:

●Apply silicone grease to the surfaces of the two pins indicated by the arrows.

●The oil seal and dust seal should be replaced with new ones after disassembly. DOT4 brake fluid should be applied to the oil seal and piston, and silicon grease should be applied to the outer ring of the dust seal.

●Apply thread fastening glue to the thread of the caliper pin, torque: 22N.m (2.2kgf.m, 16 lbf.ft).

●The torque of the air release nozzle: 7～9N.m (0.7～0.9kgf.m, 5～7 lbf.ft).

●The open end of the piston should face the caliper mounting plate, and do not install it backwards.

●If there is slight rust on the surface of the piston, it can be polished off with 2000 mesh fine sandpaper.

e. Refer to the disassembly procedure to restore all parts and add new DOT4 brake fluid according to the procedure of replacing the front disc brake brake fluid. Only after confirming that the brake is restored can the vehicle be driven.

Disassemble the rear disc brake caliper

a. Place an oil pan at the bottom of the caliper, wear waterproof gloves and loosen the bolt(1) with a 12# sleeve, remove the copper pad(2), and remove the RC-HU oil pipe. Refer to the steps for adding brake fluid to the main pump of the rear disc brake. Remove the upper cover of the main pump to accelerate the discharge of the brake fluid. Bolt(1) Standard torque: 32N.m (3.3kgf.m, 24 lbf.ft).

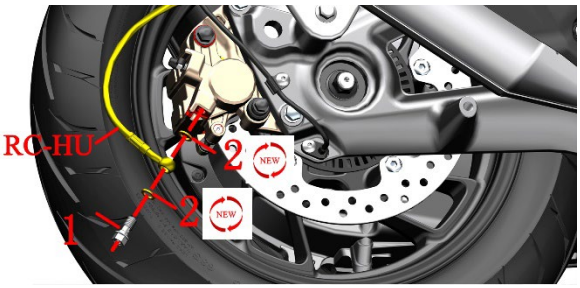

b. Use a 14# sleeve to remove the bolt (3). Standard torque of bolt (3): 24N.m (2. 4kgf.m, 18 lbf.ft).

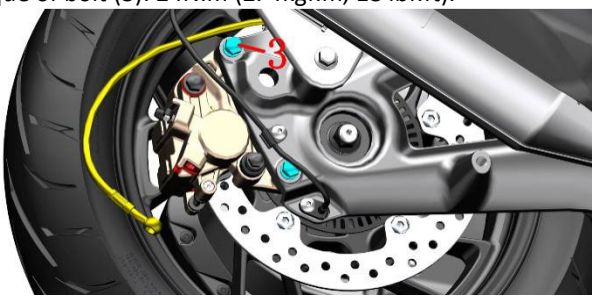

c. Refer to the procedure for replacing the brake pads to remove the brake pads first.

d. Disassemble the rear disc brake caliper

Refer to the previous steps to disassemble the front disc brake caliper piston to remove the rear disc brake caliper piston. Check the piston and caliper cylinder for scratches, damage, pits, etc. Check whether the pin is deformed. The points that should be paid attention to during cleaning and assembly are detailed in the previous description, and will not be repeated here.

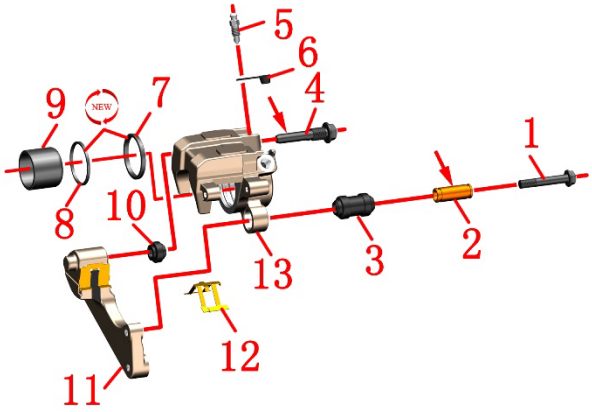

1- caliper mounting plate pin 2- bushing 3- rubber cap 4-caliper pin 5- vent nozzle 6-vent nozzle rubber cap 7-oil seal 8-dust seal 9-piston 10-caliper pin rubber cap 11- Caliper mounting plate 12- Brake pad spring 13- Caliper housing

Caution:

●Apply silicone grease to the surface of the pin and bush indicated by the arrow.

●The oil seal and dust seal should be replaced with new ones after disassembly. DOT4 brake fluid should be applied to the oil seal and piston, and silicon grease should be applied to the outer ring of the dust seal.

●Apply thread fastening glue to the thread of the caliper pin, torque: 27N.m (2.8kgf.m, 20 lbf.ft).

●The torque of the air release nozzle: 7～9N.m (0.7～0.9kgf.m, 5～7 lbf.ft).

●The open end of the piston should face the caliper mounting plate, and do not install it backwards.

●If there is slight rust on the surface of the piston, it can be polished off with 2000 mesh fine sandpaper.

Brake hose and wheel speed sensor

Check the gap between the wheel speed sensor and the induction ring gear

Caution:

●The M125/350/155/368/150/250/368(ETC) steps are similar to the M310, taking the M310 as an example.

●The vehicle needs to be parked on a stable lifting platform or on a level and level ground.

Put down the main bracket to park the vehicle firmly and let the rear wheels hang in the air.

Use a feeler gauge to check whether the gap between the wheel speed sensor and the ABS induction ring gear is 0.4-1.2mm (0.02-0.05in).

If the gap is not within the specified range, check whether the wheel speed sensor is damaged and whether the ABS induction ring gear is loose. The front wheel needs to check whether the position of the sensor installed on the front disc brake caliper mounting plate is deformed, and the rear wheel is to check whether the mounting position on the rear rocker arm is deformed and whether the rear wheel nut is loose.

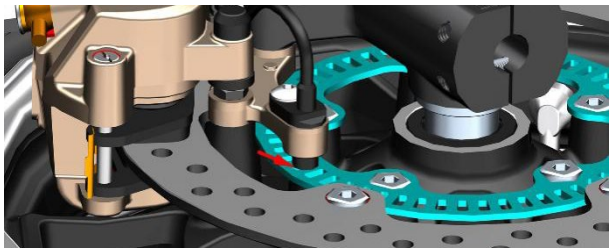

Front wheel

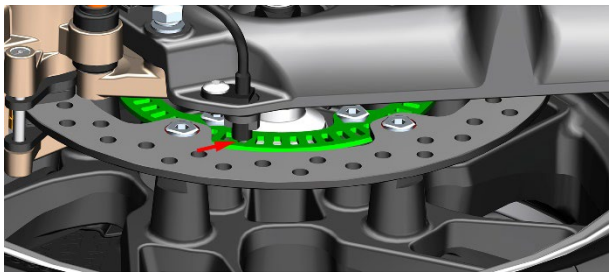

Rear wheel

Remove the brake hose and wheel speed sensor

Caution:

●Check whether the brake hose is normal according to the maintenance table.

●Before disassembling the brake hose, drain the brake fluid before operation.

●Before removing the hose, remove the upper cover of the front and rear disc brake main pump, loosen the disc brake oil pipe bolts from the front and rear disc brake calipers to drain the brake fluid.

●The discharged brake fluid needs to be properly disposed of, and it is forbidden to continue to use it. It is forbidden to dump at will to pollute the environment; or put it at will, etc. It should be handed over to a qualified recycling unit for proper disposal.

●The M125/350/155/368/150/250 steps are similar to the M310, taking the M310 as an example.

Release brake fluid

a. Refer to the previous steps to remove the oil pan first, place the oil pan at the front and rear calipers, remove the disc brake oil pipe bolts and copper pads first, and drain the brake fluid into the oil pan, and then refer to the front and rear disc brake main pumps. Add brake fluid step to remove the upper cover of the main pump to accelerate the discharge of brake fluid. Remove the disc brake oil pipe bolts and copper pads at the main pumps of the front and rear disc brakes. Only the disassembly steps of the brake hose are explained here.

b. Press the buckle indicated by the arrow, turn the plug push rod in the direction indicated by the arrow, and pull out the plug. In order to prevent the remaining brake fluid from entering the plug when the hose is removed in the next step, the plug of the hydraulic control unit can be wrapped with an oil-resistant film plastic bag.

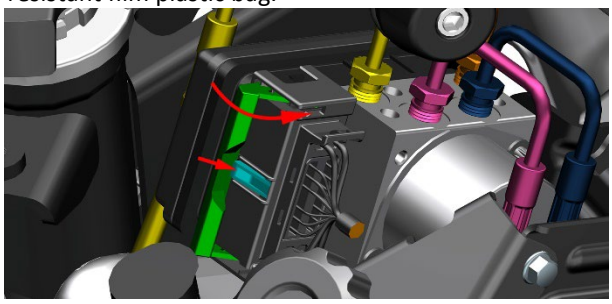

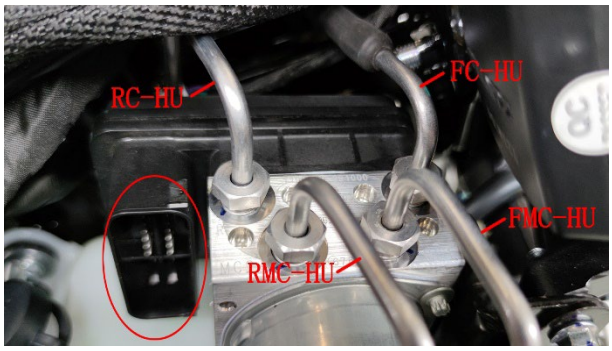

M310

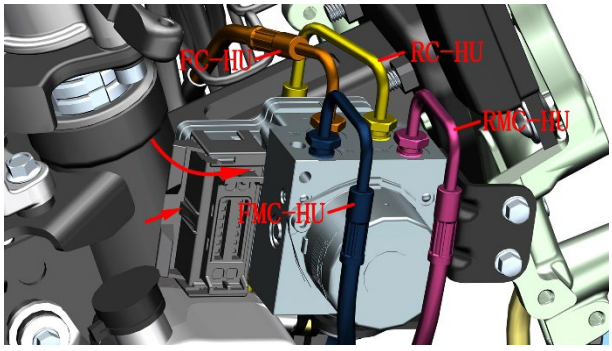

M125/155

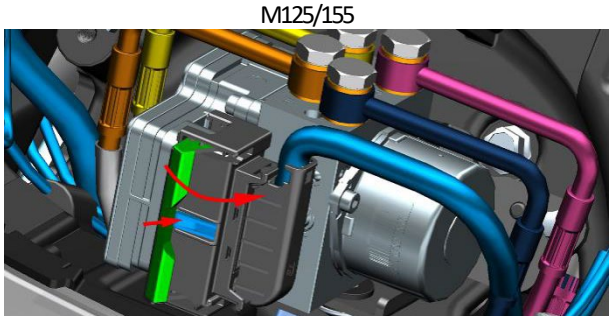



M350/368

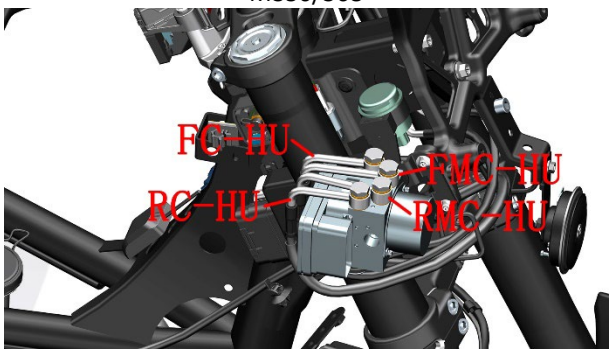

368(ETC)

FMC-HU: Front disc brake main pump-hydraulic control unit
FC-HU: Front disc brake caliper-hydraulic control unit
RMC-HU: Rear disc brake main pump-hydraulic control unit
RC-HU: Rear disc brake caliper-hydraulic control unit

Use oil-resistant plastic bag or plastic film to put it around the bottom of the hydraulic control unit, and fix it with tape to prevent the residual brake fluid from dripping on the parts when the oil pipe nut joint is loosened. M310 use a 12# open-end wrench to loosen the oil pipe nut joints at the hydraulic control unit counterclockwise, M350/368/250/368(ETC) use 14# open-end wrench. M125/310/155/150 the nut torque: 18N.m (1.8 kgf.m, 13 lbf. ft).M350/368/250/368(ETC) the bolts torque: 21N.m (2.1 kgf.m, 15 lbf. ft). Wipe up the remaining brake fluid with a clean non-woven fabric. Take care to take protective measures and prevent dripping onto the cover or cable connector.

FMC-HU and RMC-HU

Use an 8# sleeve to remove the bolt(1) that fixes the seat of the oil pipe, pull down the upper part of the FMC-HU hose, pull it out from the lower part of the direction cover, and then pull it out from the hose bracket. Check whether the surface of the removed hose is aging, cracked, damaged, abraded, etc. Wipe up the remaining brake fluid with a non-woven cloth, and then wrap the ends of the hose with cling film or a plastic bag to prevent foreign matter from entering.

Remove and inspect the RMC-HU hose in the same way.

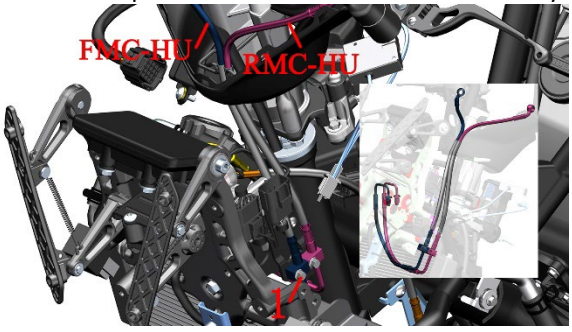

FC-HU and wheel speed sensor (front wheel)



a. Locate the plug of the wheel speed sensor on the left side of the frame, and pull out the plug after pressing the anti-release card.

b. For the removal method of FC-HU and wheel speed sensor caliper, please refer to the section “Removing the front disc brake caliper”.

c. Cut off the 2 cable ties(1), remove the 3 wire ties(7), and remove the wheel speed sensor wire(6). Check whether the cable is damaged. If the cable sheath is frayed, wrap it with electrical tape to avoid short-circuit and cause vehicle failure. The front wheel speed sensor is also responsible for providing a speed signal to the meter to display the speed per hour.

Use an 8# sleeve to remove the bolt(2), and take off the FC-HU hose.

If you need to remove the hose bracket(4), you can use 4# inner hexagon to remove the bolt(3) and then take it off. If you only remove the hose, you can skip this step.



d. Check whether the surface of the removed hose is aging, cracked, damaged, abraded, etc. Wipe up the remaining brake fluid with a non-woven cloth, and then wrap the ends of the hose with cling film or a plastic bag to prevent foreign matter from entering. Check whether the cable sheath of the wheel speed sensor cable is damaged. If the sheath is frayed, it can be glued with electrical tape to prevent short-circuit.

RC-HU and wheel speed sensor (rear wheel)

a. Find 3 cable ties on the frame tube above the fuel tank on the right side of the frame, and cut the cable ties(1) that bind the RC-HU hose in the middle. Do not cut the other 2 cables. When reinstalling, make sure that the cable tie cannot be tied too tightly, and a certain gap should be left.



b. Find the plug of the wheel speed sensor(2) on the right side of the middle part and unplug it.



c. First remove the 3 pieces of wire clamp(4), and then pull out the wheel speed sensor(2) and the RC-HU hose from the 4 pieces of oil pipe clamp(3). If you need to remove the tubing clamp (3), you can use 4# inner hexagon to remove the bolts and then you can take it off.

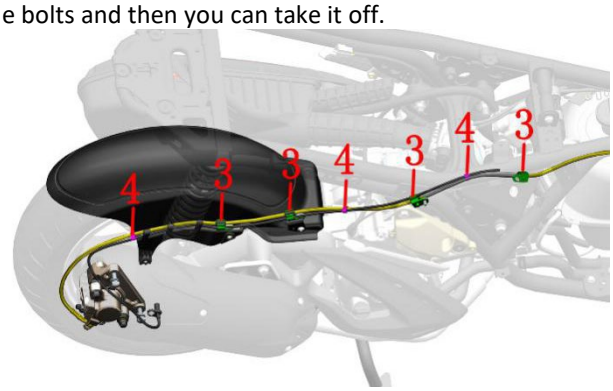

d. Pull the RC-HU head out of the gap between the auxiliary water tank and the frame.

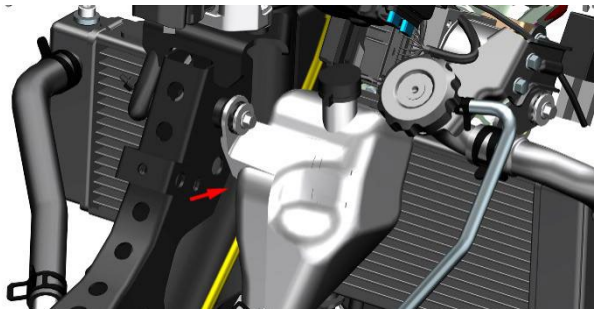

e. Pull out the RC-HU hose and wheel speed sensor wire from the rear inner mud plate.

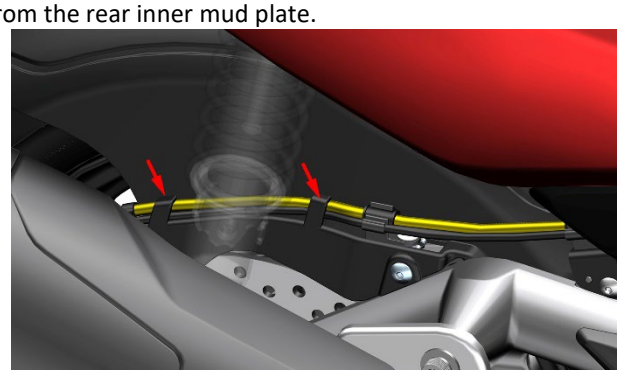

f. Pull out the wheel speed sensor from the clamp(5), remove the bolt(6) with a 4# inner hexagon, and then remove the wheel speed sensor from the car. If you need to remove the clamp(5), you can use 4# inner hexagon to remove the bolt(6) that fixes the clamp.

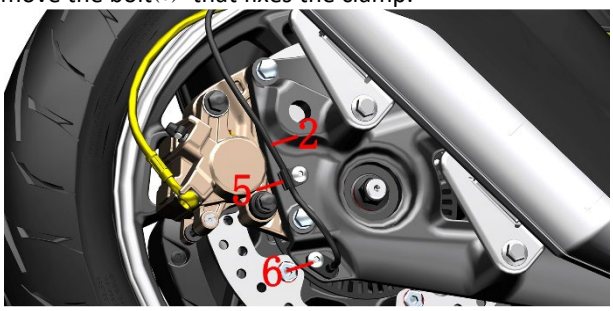

g. Check whether the surface of the removed hose is aging, cracked, damaged, abraded, etc. Wipe up the remaining brake fluid with a non-woven cloth, and then wrap the ends of the hose with cling film or a plastic bag to prevent foreign matter from entering. Check whether the cable sheath of the wheel speed sensor cable is damaged. If the sheath is frayed, it can be glued with electrical tape to prevent short-circuit.

ABS system layout

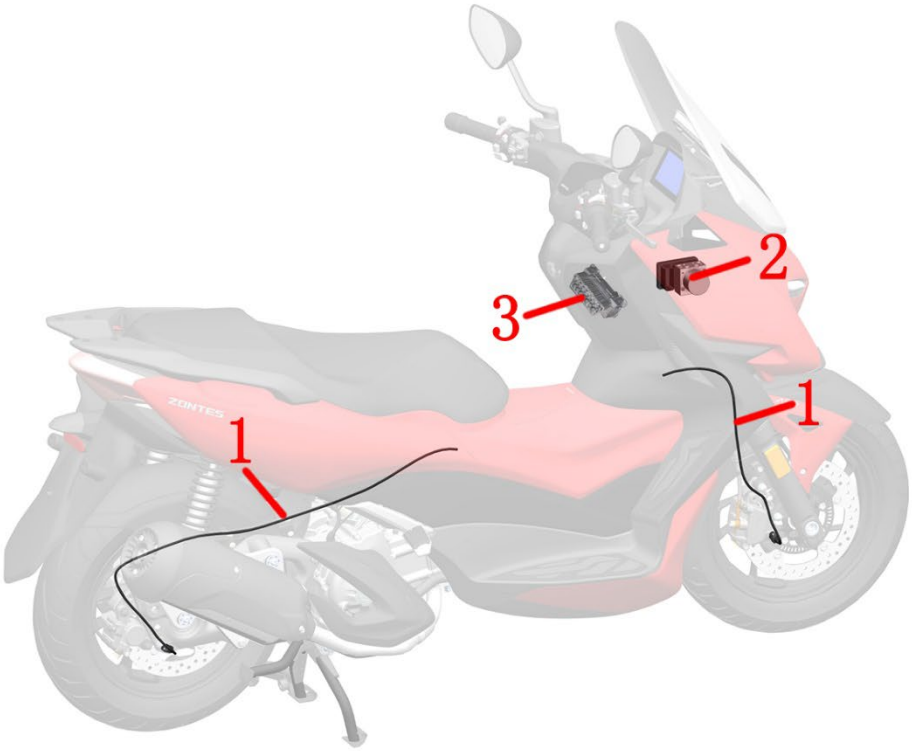

1-Front and rear wheel speed sensor 2-ABS hydraulic control unit 3-OBD diagnostic interface

ABS hydraulic control unit

Caution:

●Before disassembling the hydraulic control unit, the positive and negative electrodes of the battery must be disassembled to prevent damage to electrical components caused by misoperation.

●Brake fluid is toxic, so it needs to be protected. For specific precautions, please refer to the pre-service instructions.

●Be careful not to bend or bend when disassembling the brake hose connector. The cable connector has an anti-trip buckle and cannot be pulled out forcibly. After removing the hose, prevent foreign matter from entering.

●Before reassembling the hose connector at the hydraulic control unit, apply a small amount of brake fluid to the thread.

●After replacing the new hydraulic control unit, you need to refill the brake fluid and exhaust the air to ensure that the brakes are restored to normal before driving the vehicle.

Disassemble

a. Refer to the steps to remove the cover and remove it to the figure first.



b. Use a 8# sleeve to remove 2 bolts (1) Remove the water tank filler bracket assembly to expose the ABS hydraulic control unit. In order to facilitate the disassembly, the 2 bolts need to be installed back.

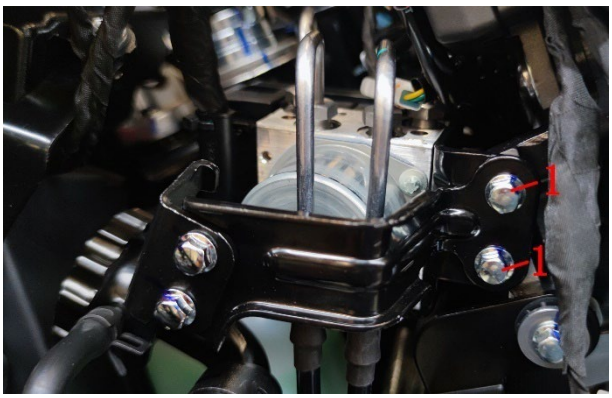

c. Refer to the previous steps to release the brake fluid, remove the 4 hose connectors and unplug the cable connectors.

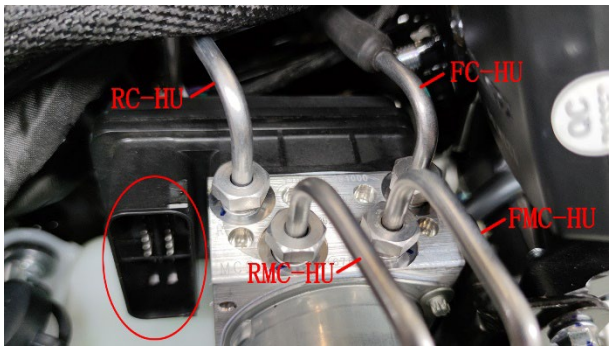

M310

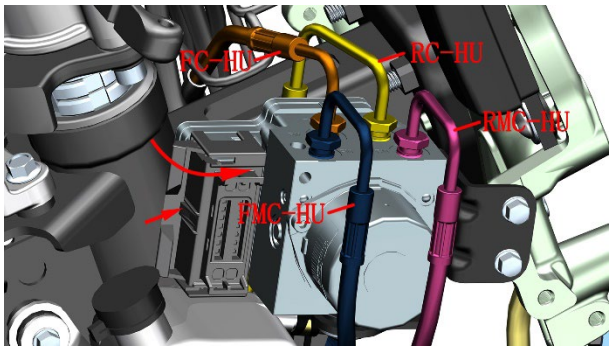

M125/155

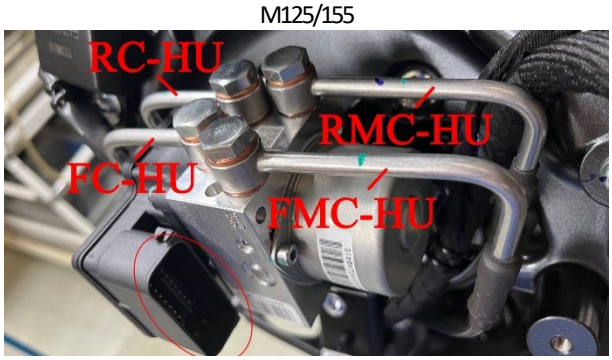

M350/368/250

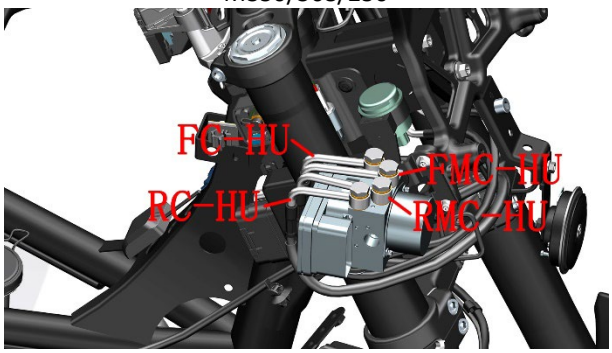

M368(ETC)

d. Remove the 2 bolts that were put back in the front (1) Remove the hydraulic control unit and bracket assembly from the car.

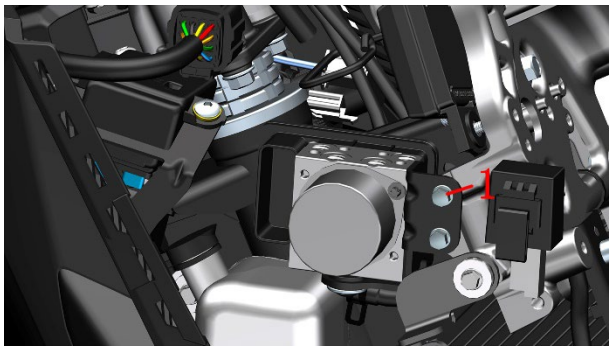

e. After holding the hydraulic control unit firmly, ETC model using T25 Trox wrench,and other models are using 4# inner hexagon to remove the M6×16 bolts(2), then the hydraulic control unit can be removed. If you need to replace the bracket(4), you need to remove the flanging bushing and the cushion rubber(6).

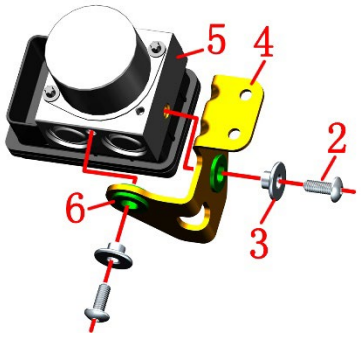

ABS troubleshooting

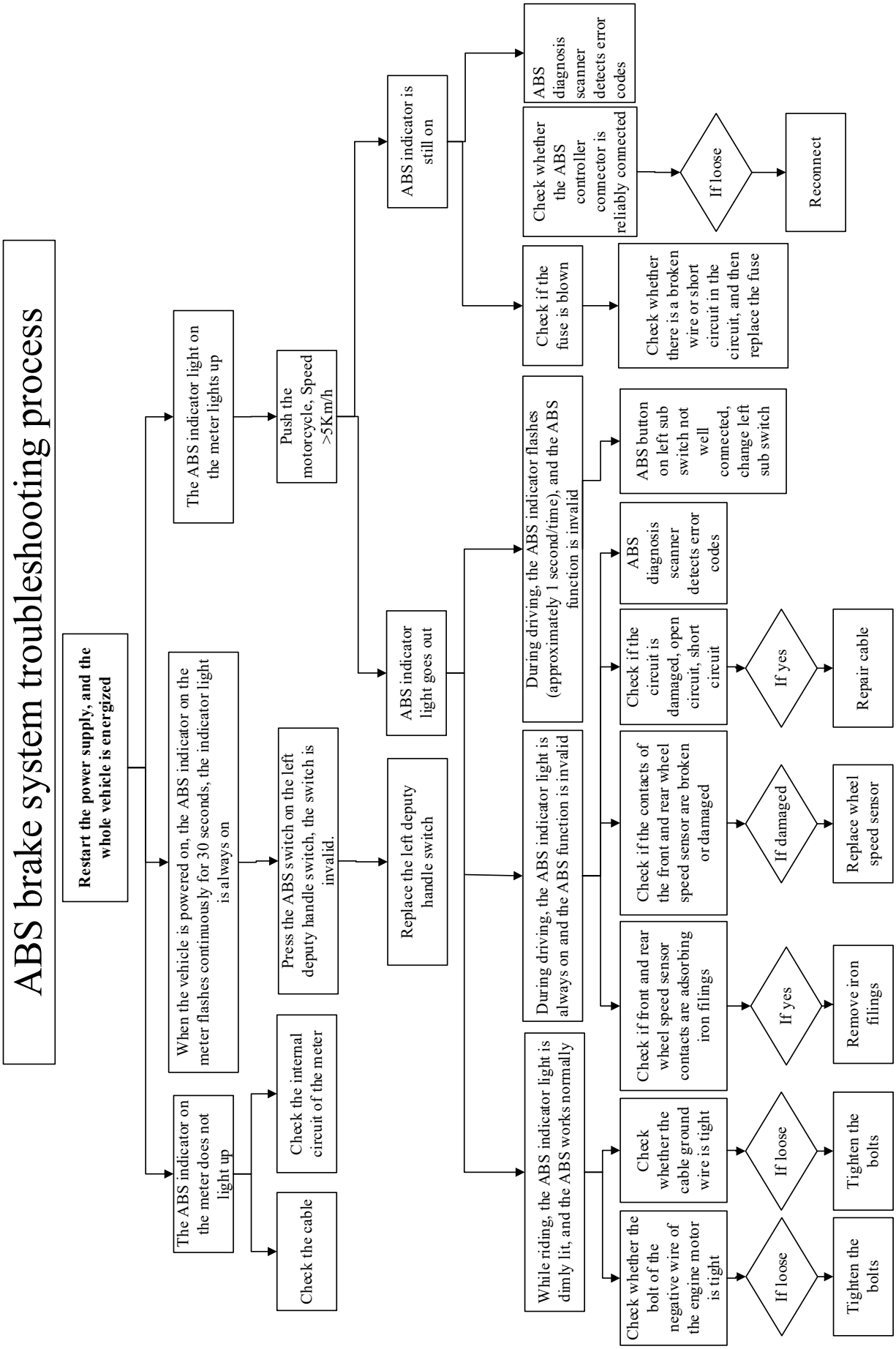

M310 Troubleshooting process with portable ABS diagnostic scanner

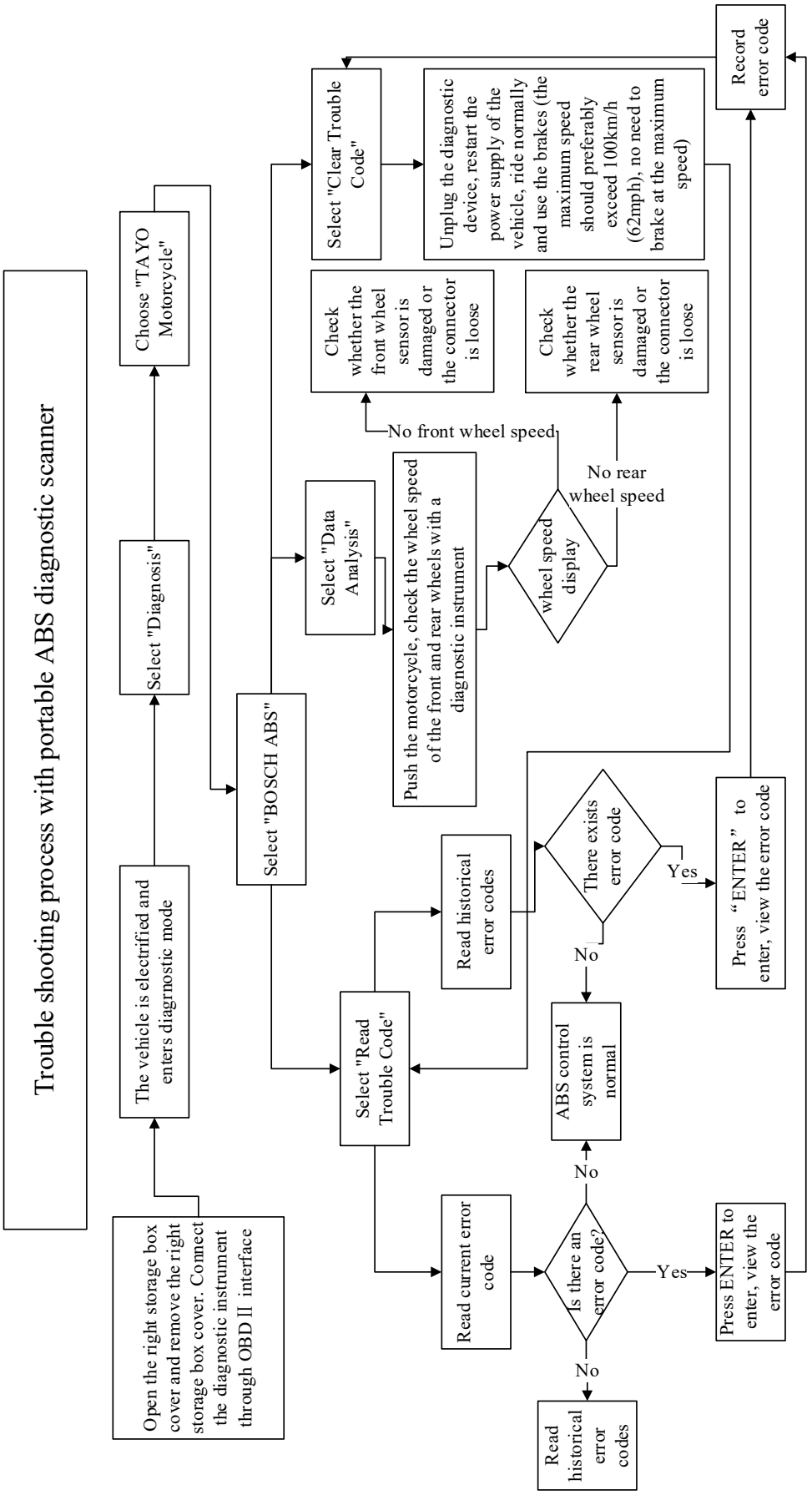

Error Code	Explanation
5043H	Front wheel speed sensor disconnected/ground short circuit/power supply short circuit
5042H	Front wheel speed sensor failure--unstable signal
5045H	Rear wheel speed sensor disconnected/ground short circuit/power supply short circuit
5044H	The rear wheel speed sensor is faulty--the signal is unstable
5025H	There is a deviation in front and rear wheel speeds
5052H	Power supply failure (low voltage)
5053H	Power supply failure
5223	EEPROM is out of range

Error Code	Explanation
5017H	Front wheel inlet valve (EV valve) failure
5018H	Front wheel drain valve (AV valve) failure
5013H	Rear wheel inlet valve (EV valve) failure
5014H	Rear wheel drain valve (AV valve) failure
5035H	Motor failure
5019H	Valve relay failure (relay that guarantees fail-safety)
5055H	ECU failure
5122H	EEPROM read failure

9. Battery/charging system

Know Before Service

1. It is necessary to properly dispose of discarded batteries to avoid pollution to the environment. It is recommended that waste batteries be returned to a professional recycling agency for recycling.
2. It is forbidden to use chargers that have not passed the inspection to charge the battery.
3. The EFI system needs to be reset when the battery is reinstalled, the power is suddenly cut off during driving, the idling speed is abnormal, and the insurance is re-plugged. The specific method is as follows:
   a. Unlock the vehicle and support the main bracket;
   b. Pinch the brake and start the vehicle;
   c. Pull the engine speed above 3000 rpm;
   d. After releasing the throttle, turn off the flameout switch and lock the car;
   e. After waiting for 5 seconds, unlock the vehicle again to complete the reset of the EFI system.
4. The vehicle should be powered off before disassembling the battery.
5. Before troubleshooting the charging system, check whether the battery is in normal use and maintenance. Check with the owner whether you often use high-power electrical appliances, or do not drive a motorcycle for a long time, or turn on the lights for a long time without starting the vehicle.

Tool：

Multimeter	Tool	Torque Wrench
		

⚠WARNING

●When the engine cannot be started, do not press the electric start button frequently. Frequent operation can cause overheating or damage to the starter motor, flooding of the tank, and battery feed.
●When the vehicle is energized, connecting or unplugging the plug may cause damage to some electrical components.
●Overcharge or undercharge, or long-term discharge may cause damage to the battery.

Troubleshooting

Battery damage or attenuation troubleshooting process

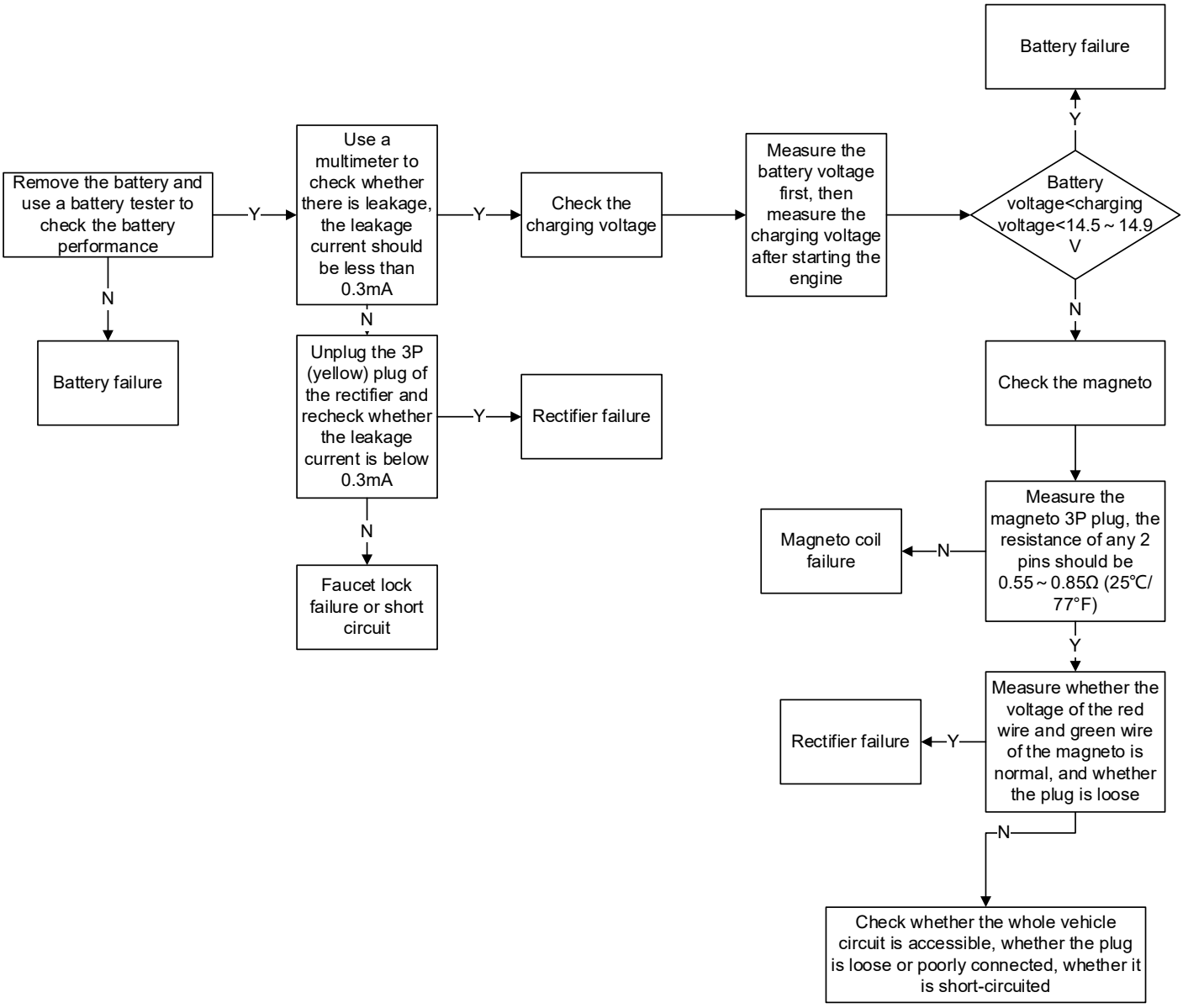

Charging system layout diagram

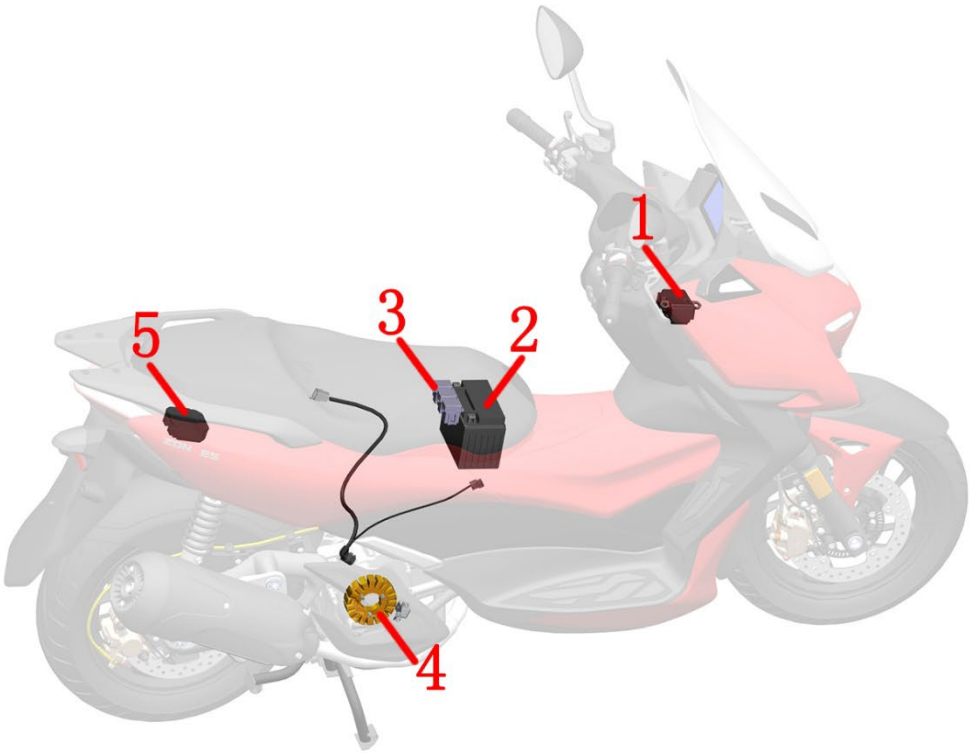

1-Charging port (PKE) 2-Main fuse (25A) 3-Battery 4-Magnetic motor 5-Rectifier(M125/310/350),the M155 is the Start-stop controller

Electrical schematic diagram

M310/350/368/125/150/250/368(ETC)

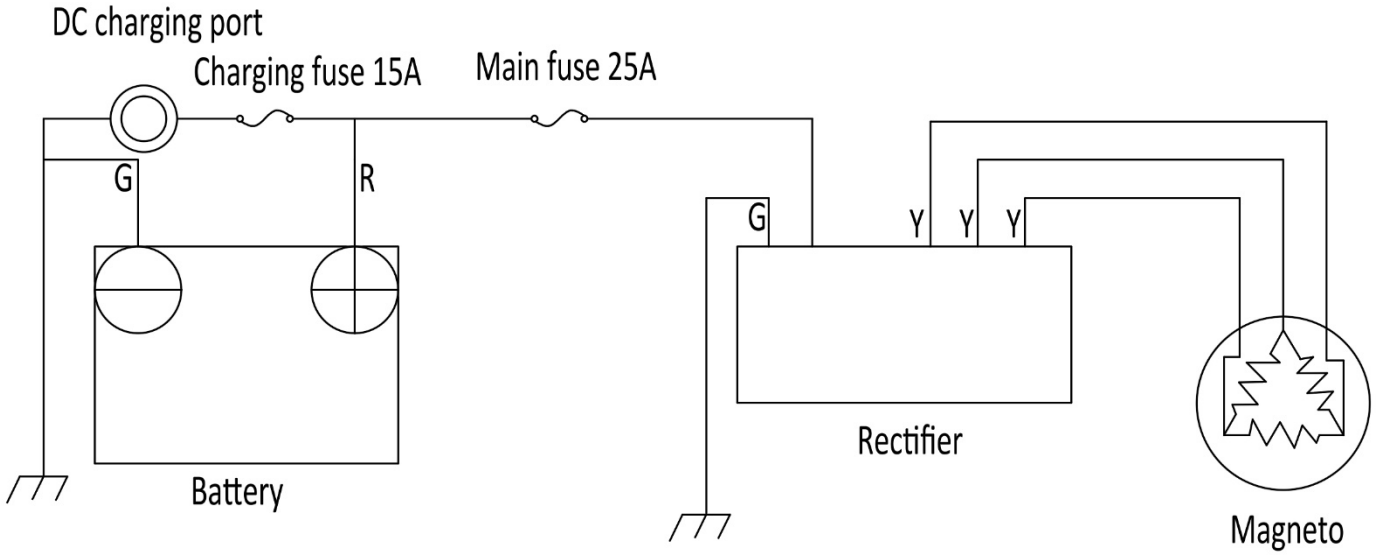

Letter	G	R	Y
English	Green	Red	Yellow

M155

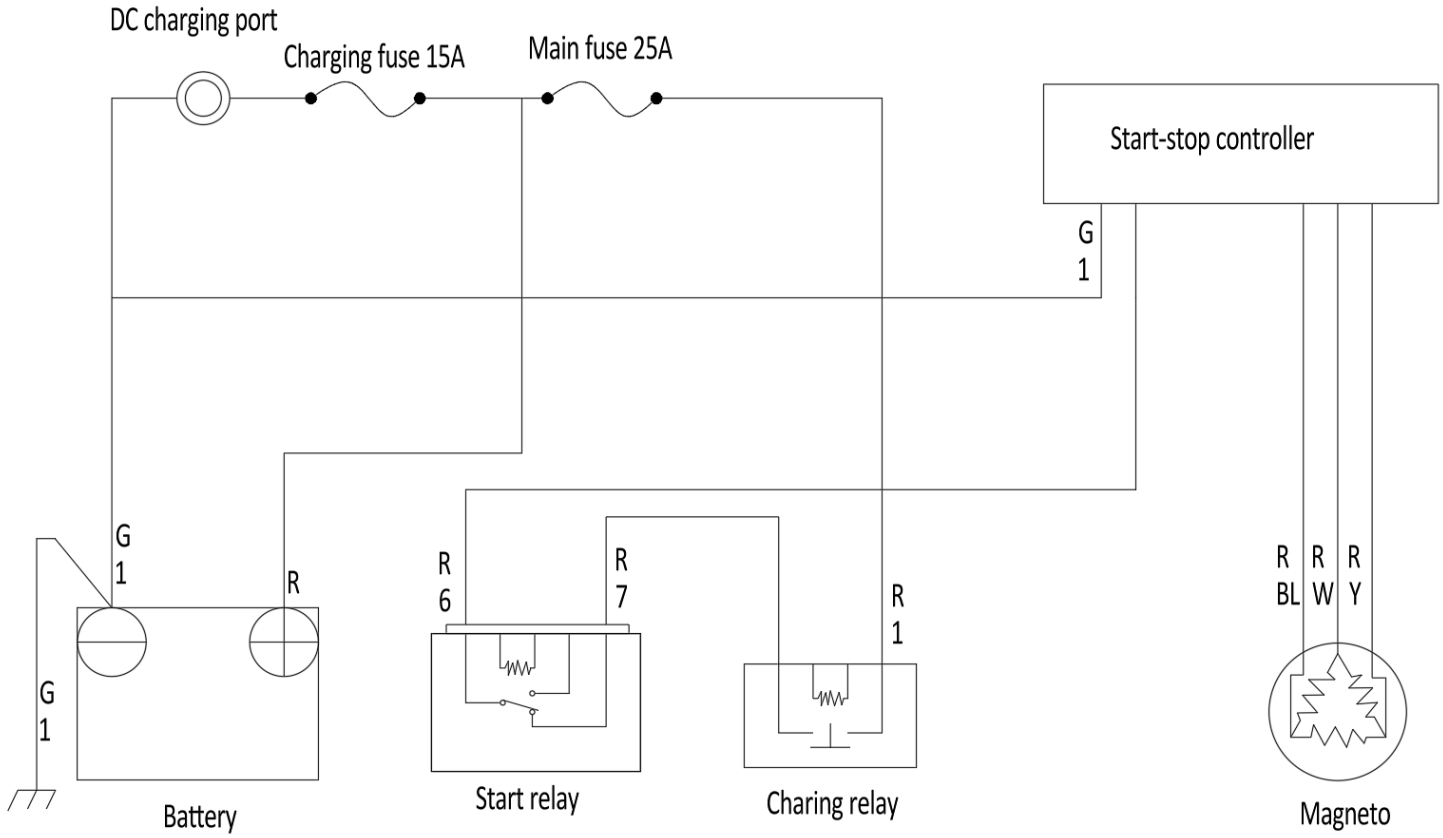

Letter	G	R	Y	BL	W
English	Green	Red	Yellow	Blue	White

Battery disassembly

1. Disassembly

Refer to the steps “a” to “d” in the section "Removing the stepper motor and cleaning the carbon deposit" in the section "Throttle valve body" in the "Maintenance" chapter of this manual to remove the battery.

Caution:

●The whole vehicle must be powered off before disassembling the battery.

●The negative pole must be removed first, and then the positive pole. The opposite is true when installing.

●The positive and negative electrode protective caps must be covered when reinstalling.

●After removing the battery, reset the meter time and reset the EFI system.

●The M125/350/155/150/368/150/250/368(ETC) steps are similar to the M310, taking the M310 as an example.

2. Check

Open the seat cushion, remove the battery cover and remove the protective caps of the positive and negative electrodes, and use a multimeter to measure the battery voltage. Note that the vehicle should be turned off before measuring the voltage.

domestic:

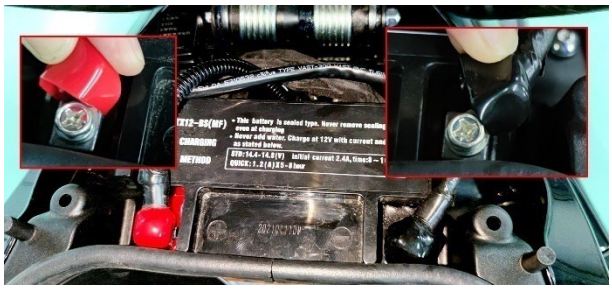

foreign:



Voltage	Full voltage	13.1～13.3V
	Charging voltage required for unloaded car	≤12.8V
	Charging voltage required for loading	≤12V

Caution:

●The battery that has just been charged should be placed for about 30 minutes before measuring. The voltage of the battery that has just been charged will fluctuate.

3. Charging

If the battery cannot be started due to insufficient power, it can be charged with the charger provided with the car. Open the right storage box cover and remove the cover to see the DC charging port that comes with PKE. M125/310 the battery can be charged after unplugging the PKE fuse. For specific steps, please refer to the section "Checking the battery voltage" in the chapter "Inspection of sound, light, and electrical devices" in the chapter "Maintenance", or the instructions delivered with the car.

Charging system check

1. Leakage test

a. Turn off the vehicle and cut off the power supply, and remove the negative wire of the battery.

b. Adjust the multimeter to the current position. Connect the black test lead to the negative terminal of the battery and the red test lead to the removed negative wire. Pay attention to first adjust the current to the high gear, and then gradually reduce to the appropriate gear.

c. Measure whether the leakage current is below 0.3mA. If it exceeds the standard value, check whether the circuit has a short circuit.

2. Check the charging voltage

Caution:

●Before testing, make sure the battery is in good condition.

●Do not disconnect the battery or any electrical devices before the whole vehicle is powered off.

a. First warm up the engine to normal operating temperature, and then turn off the engine.

b. Connect the red test lead of the multimeter to the positive electrode of the battery and the black test lead to the negative electrode directly. Adjust the multimeter to the 20V DC voltage range. Turn on the high beam of the headlights and start the engine. Measure the charging voltage when the engine speed is 5000 rpm.

standard:

Battery voltage<Charging voltage<15.5V

3. Inspection of magneto stator charging coil

a. Remove the storage box, find the yellow 3P plug of the rectifier above the frame tube on the left side of the rear of the frame and unplug it.



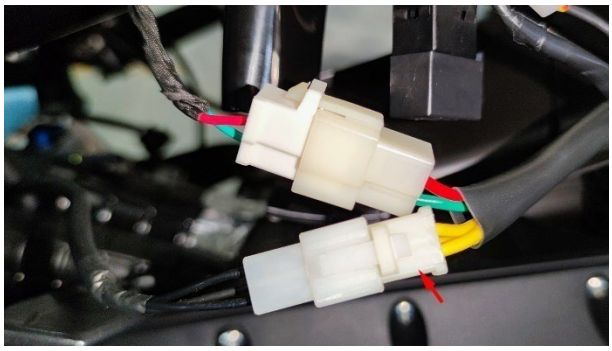

b. Check whether the plug is loose or corroded.

c. Use the resistance profile of a multimeter to measure the resistance of any two wires of the black 3P plug. The standard is 0.55～0.85Ω (25℃/77°F).

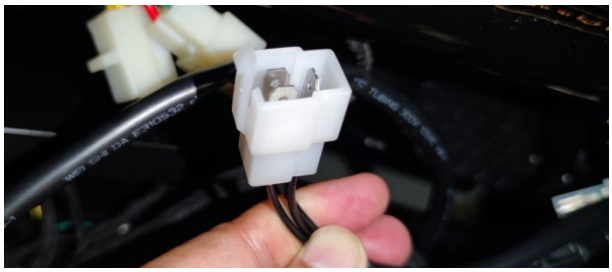

d. After unplugging the yellow 3P plug, measure the red positive wire and green negative wire with a multimeter, and the battery voltage should be measured. Use the buzzer file of the multimeter to check whether the green negative wire and the ground wire (the ground wire can be found in any stud directly connected to the frame) are always conducting.

M125/310/350/368/150/250/368(ETC) remove the rectifier

a. Follow the steps to remove the storage box after removing it first. Unplug the two plugs of the rectifier and cut off the cable tie (1).

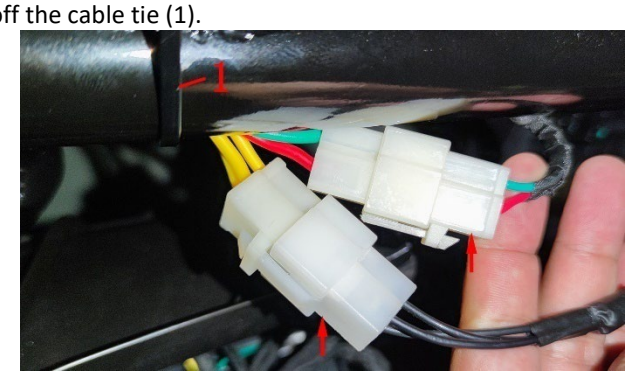

b. Refer to the steps of removing the armrests and rear skirts to remove them first. Vehicles produced before mid-August 2022 .remove the bolts(2) fixing the rear fender on both sides with 5# inner hexagon respectively, and remove the bush(4) and the rubber pad(4). After that, remove the M6×14 bolts with 4# inner hexagon.

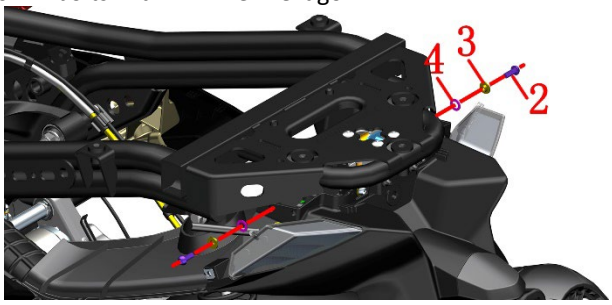

After that, remove the M6×14 with 4# inner hexagon

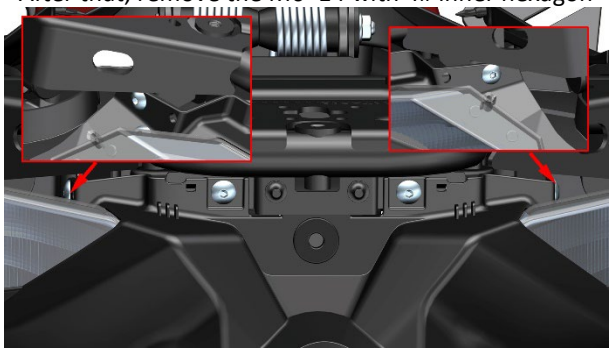

c. Vehicles manufactured before May 25, 2022:

Remove 2 bolts (5) from the bottom with 8# short sleeve, and then pull down the rectifier and rear fender assembly to a certain distance to facilitate the extraction of the rectifier cable.

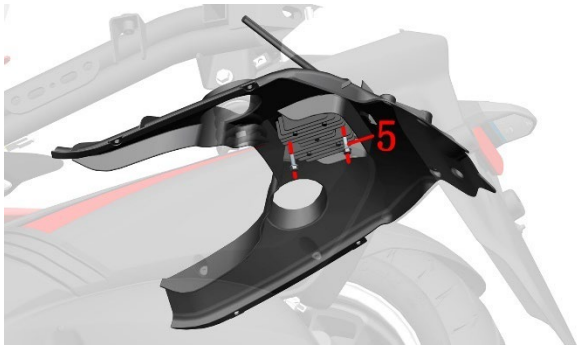

Vehicles produced after May 25, 2022: Use a 10# Torx wrench to fix the M6 nut above, and use an 8# socket to remove the M6×22 bolt at the bottom. Note that there are two bushings between the rectifier and the front of the rear fender.



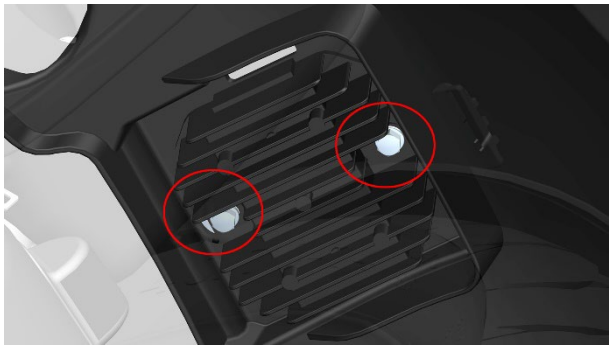

d. Pull down the rectifier and pull the cable out of the hole in the front of the rear mud board. Remove the rectifier from the car. When pulling out the cable, be careful not to pull it forcibly to avoid damaging the plug or pulling off the wire.

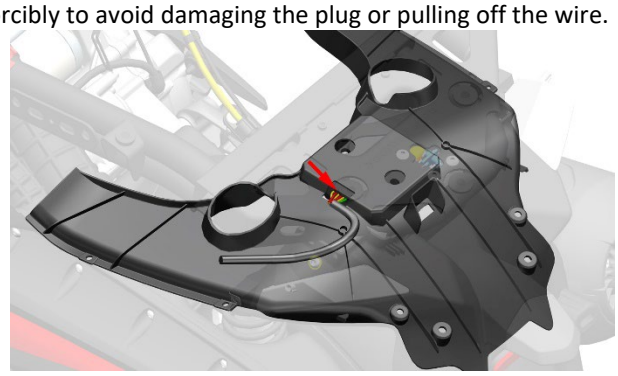

10. Front fork assembly

Know Before Service

1. Use good quality tools, or special tools and fixtures designed by our company. The use of inferior tools may cause damage to parts, peeling of plating, improper assembly, etc.
2. The O-rings, paper gaskets, copper gaskets, and component seals used for sealing must be replaced before assembly.
3. Fasteners with torque requirements need to use a torque wrench to check the torque; if the torque is not required, refer to the general torque value recommended by general fasteners.
4. Clean up before assembly; after assembly, check whether the assembly is correct and in place.
5. The vehicle should be parked in a balanced manner and pay attention to safety during disassembly and assembly. Including but not limited to the use of electric tools, hand tools, pneumatic tools, hydraulic tools, handling; prevent contact with skin, eyes, burns, etc.
6. The replaced oils, liquids, batteries, etc. must be recycled and handed over to a qualified organization for disposal; it is forbidden to dump them at will to pollute the environment or water sources.
7. Swallowing or inhaling coolant, brake fluid, etc. will cause certain harm to the human body. Any exposed skin such as hands and face should be cleaned thoroughly after each addition. If swallowed by mistake, immediately contact the poison control center or hospital; if inhaled, immediately go to a ventilated environment. If it accidentally splashes into the eyes, immediately rinse the eyes with a large amount of running water and seek medical advice or consultation in time. Keep away from children and pets.
8. When replacing the front wheels, jacks or similar devices are needed to support the entire vehicle.
9. Contaminated disc brake discs and disc brake pads will reduce the braking effect. Please replace with new disc brake discs and clean the contaminated brake discs.
10. When the front wheel is removed, please do not operate the brake handle.
11. After the front wheel is installed, please press the brake handle repeatedly until the brake restores the braking effect.

Tool：

Tool	Torque Wrench
	

Only part of the basic requirements for matters needing attention, prevention of accidental injury, etc. can be listed; it is not possible to list all situations in detail. Be vigilant during disassembly and assembly to prevent accidents.

Exploded view of front fork components:

M125/310 Directional exploded view

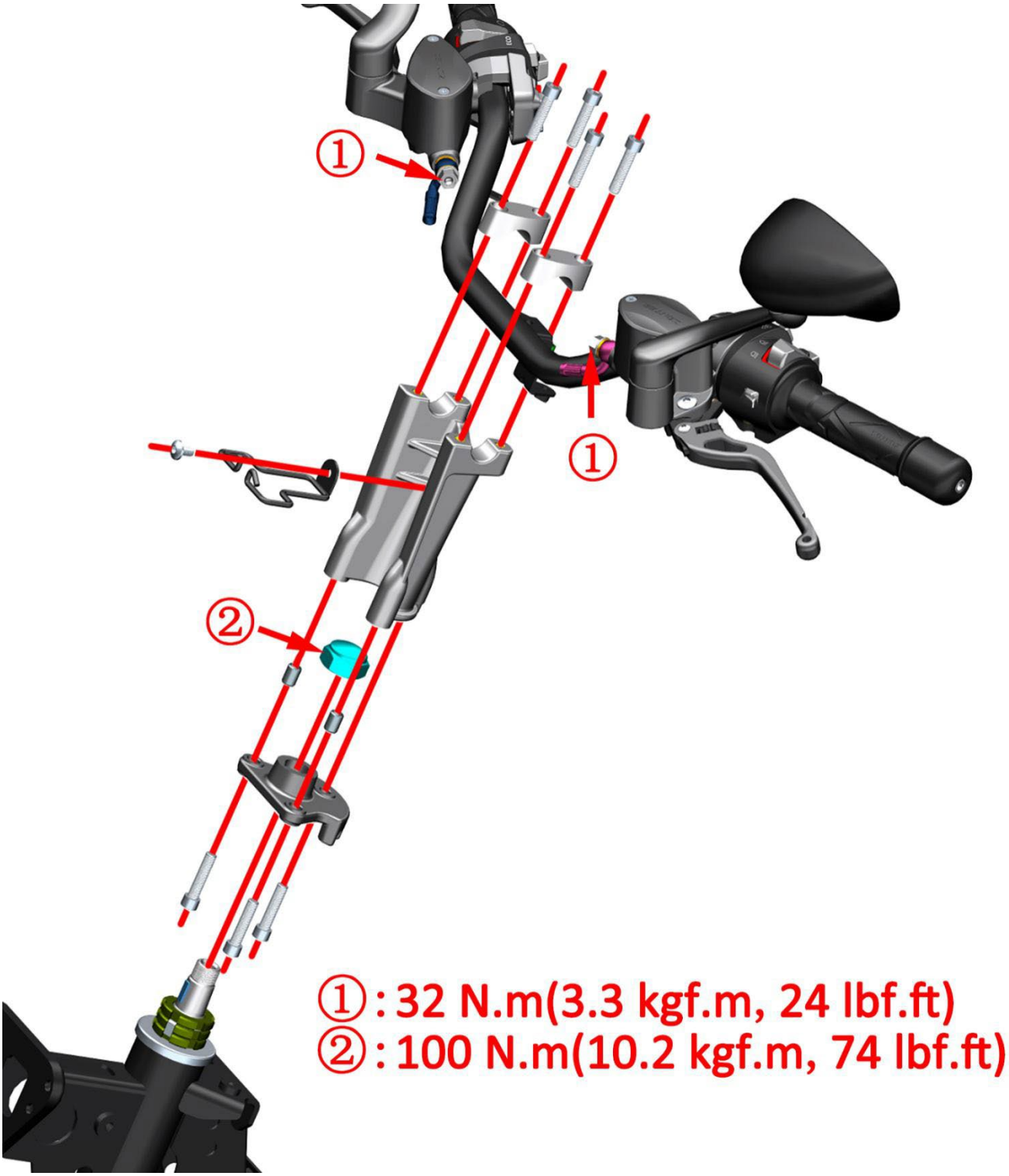

M350/368/250 Directional exploded view

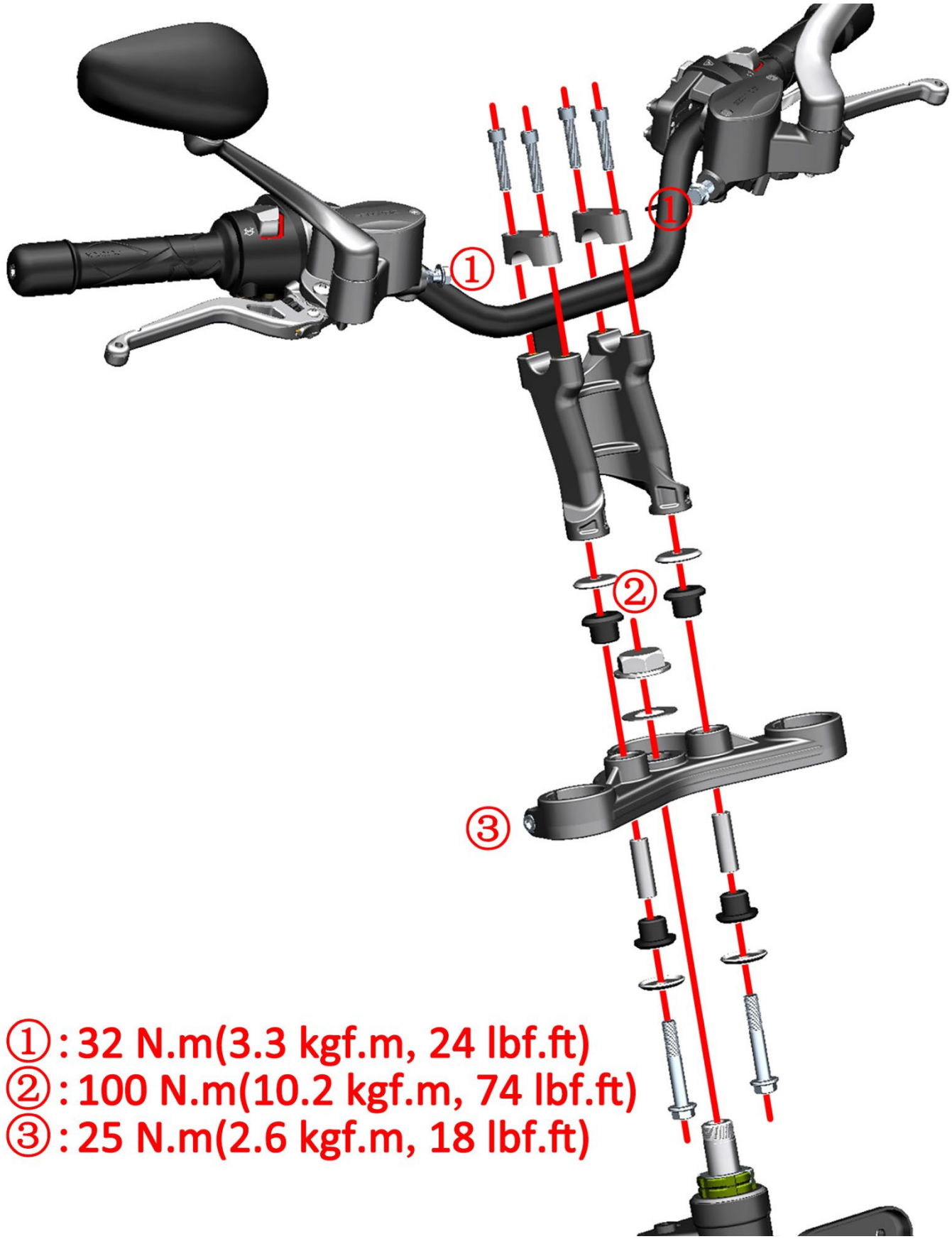

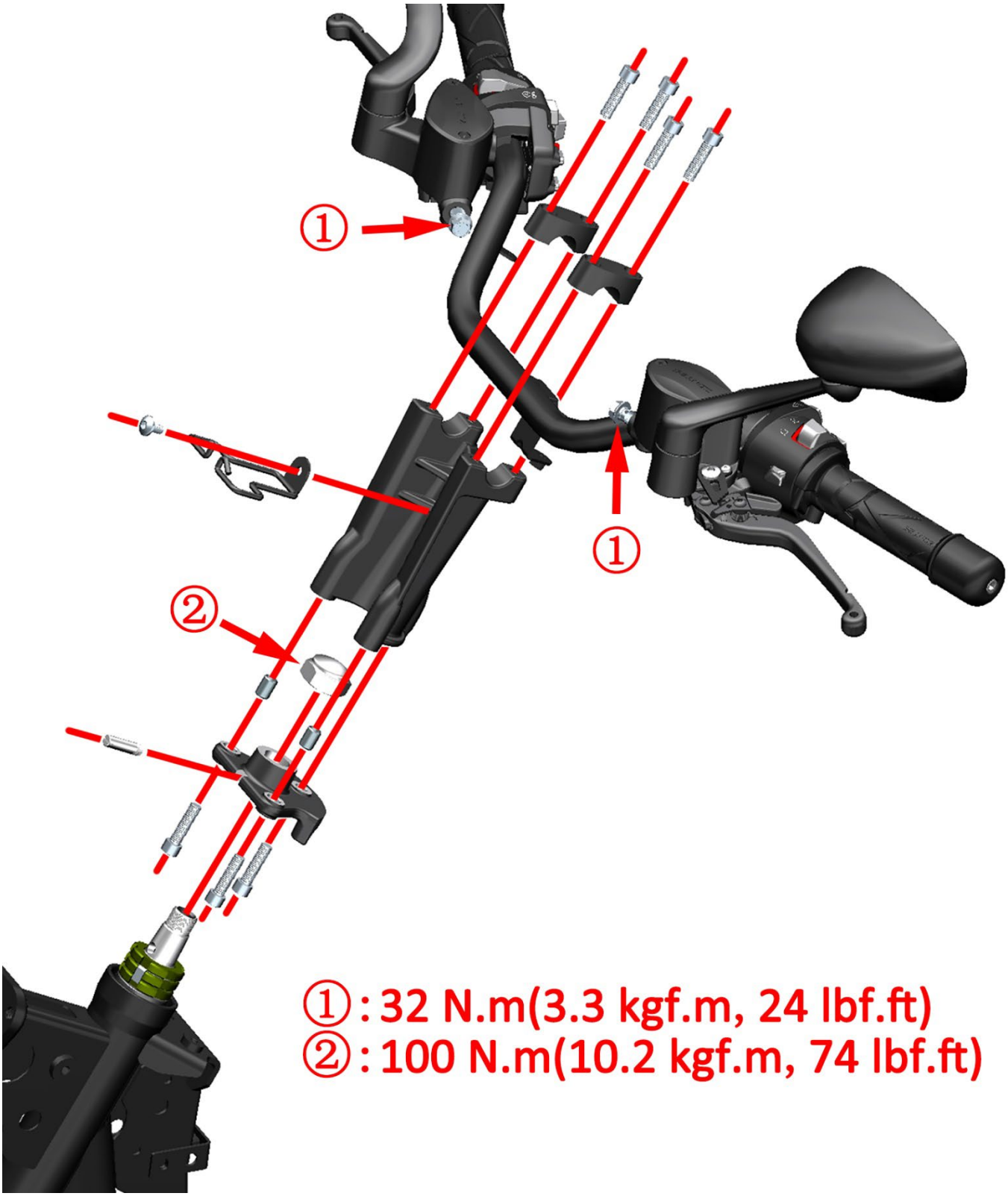
①
①
②
①:32 N.m(3.3 kgf.m, 24 lbf.ft)
②:100 N.m(10.2 kgf.m, 74 lbf.ft)

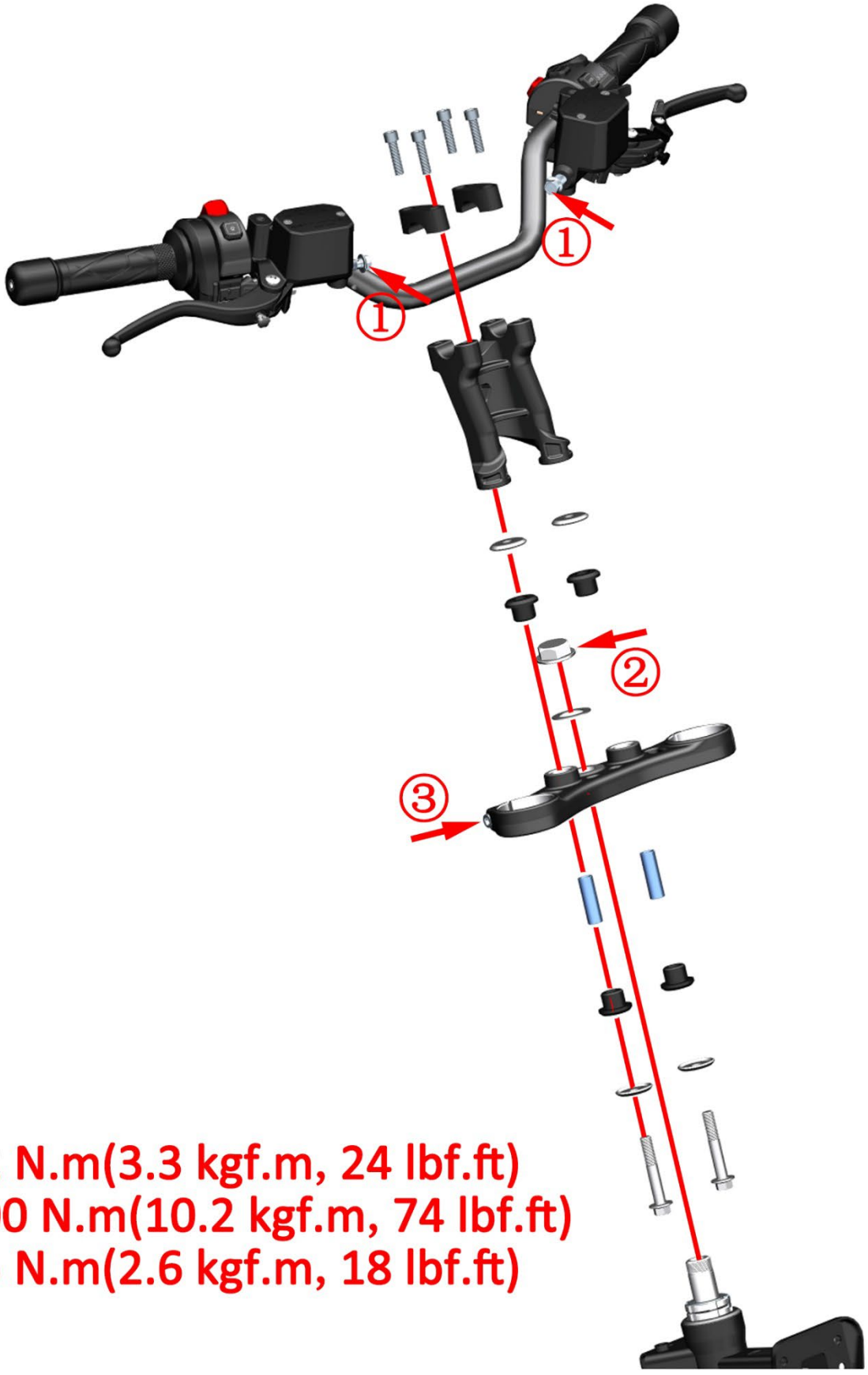

①:32 N.m(3.3 kgf.m, 24 lbf.ft)
②:100 N.m(10.2 kgf.m, 74 lbf.ft)
③:25 N.m(2.6 kgf.m, 18 lbf.ft)

Front fork exploded view

M125/310/155/150

The M125/155/150 are similar to the M310, taking the M310 as an example.

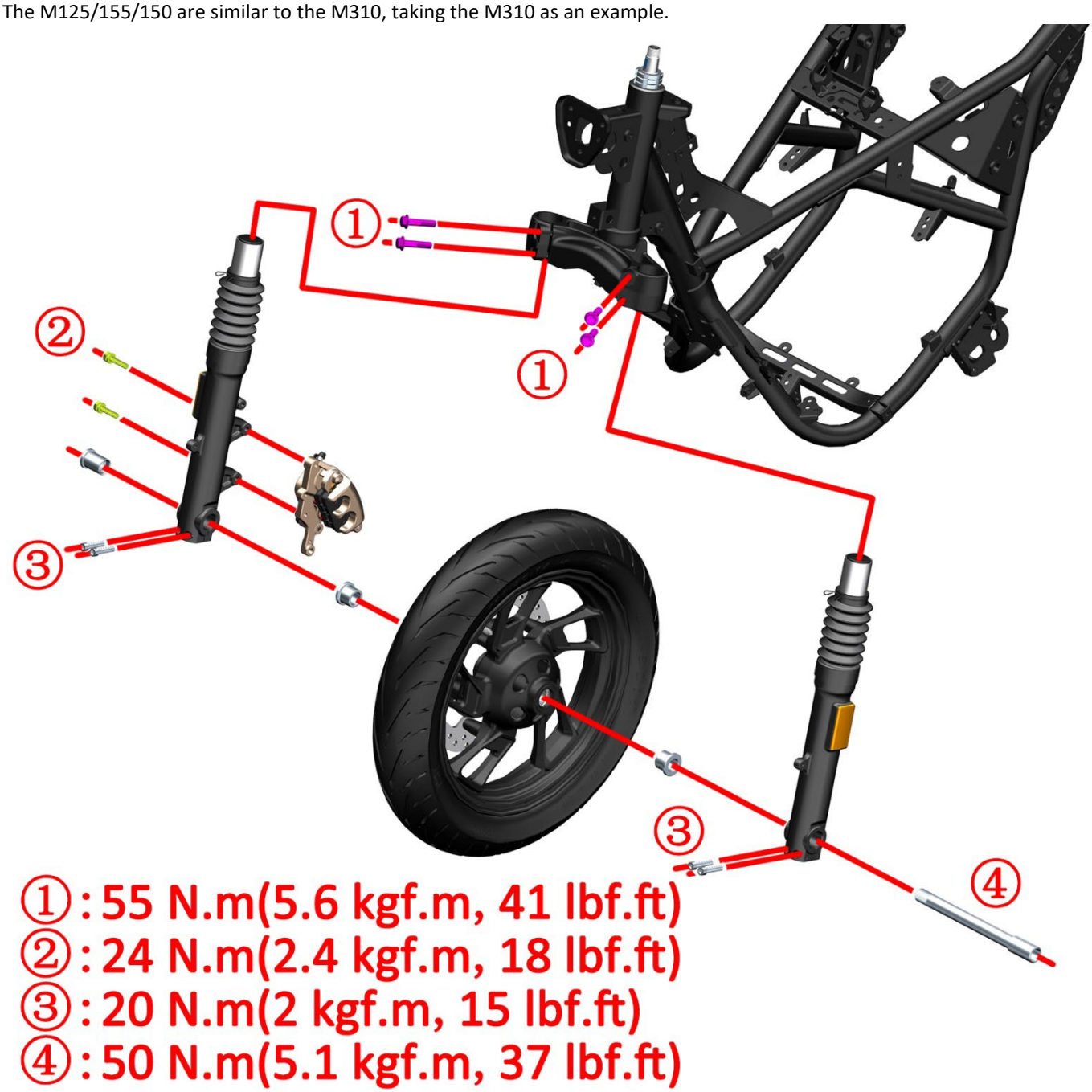

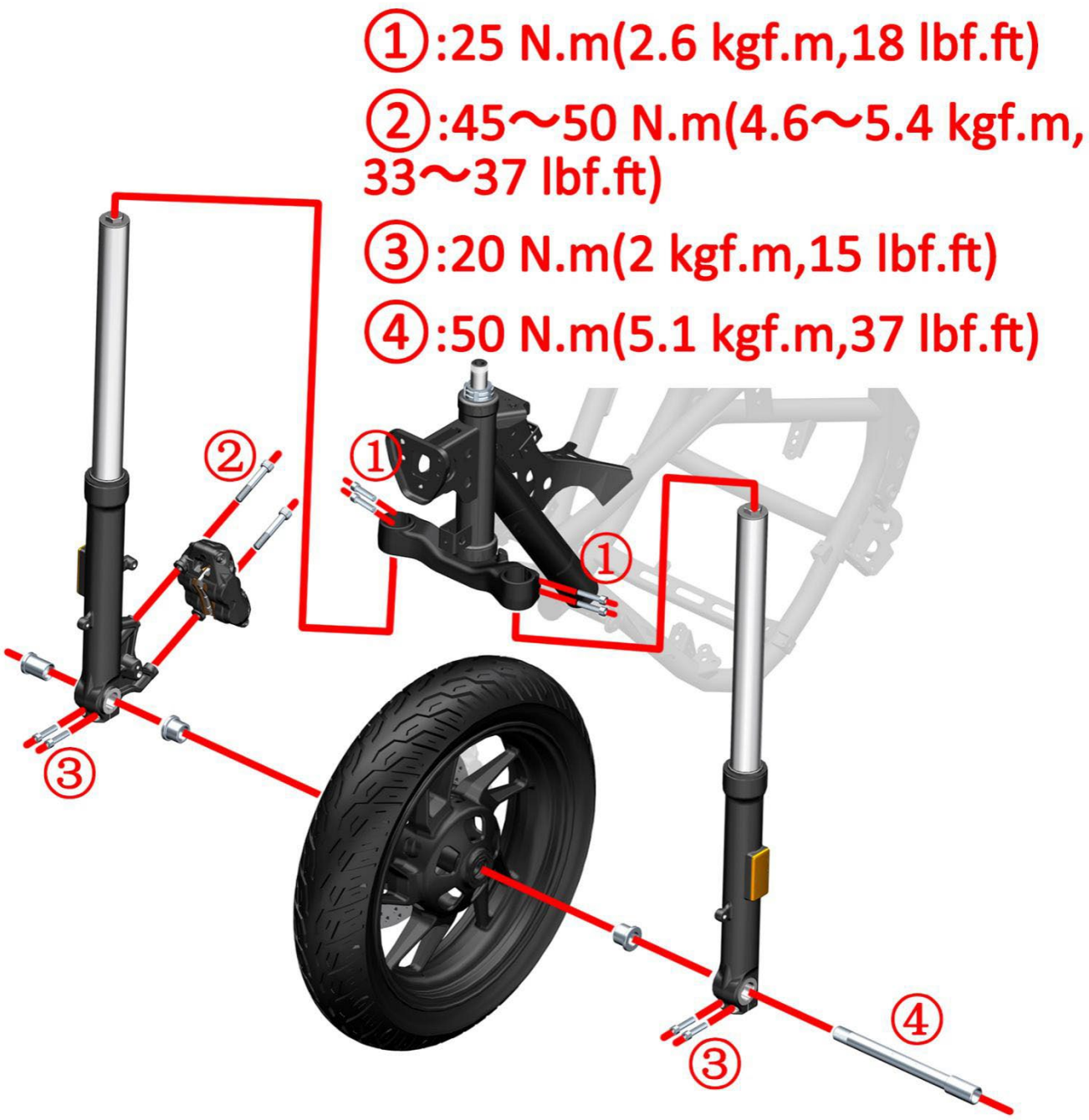
①:25 N.m(2.6 kgf.m,18 lbf.ft)
②:45～50 N.m(4.6～5.4 kgf.m, 33～37 lbf.ft)
③:20 N.m(2 kgf.m,15 lbf.ft)
④:50 N.m(5.1 kgf.m,37 lbf.ft)
①
②
①
③
③
④

①:25 N.m(2.6 kgf.m,18 lbf.ft)

②:45～50 N.m(4.6～5.4 kgf.m, 33～37 lbf.ft)

③:20 N.m(2 kgf.m,15 lbf.ft)

④:50 N.m(5.1 kgf.m,37 lbf.ft)

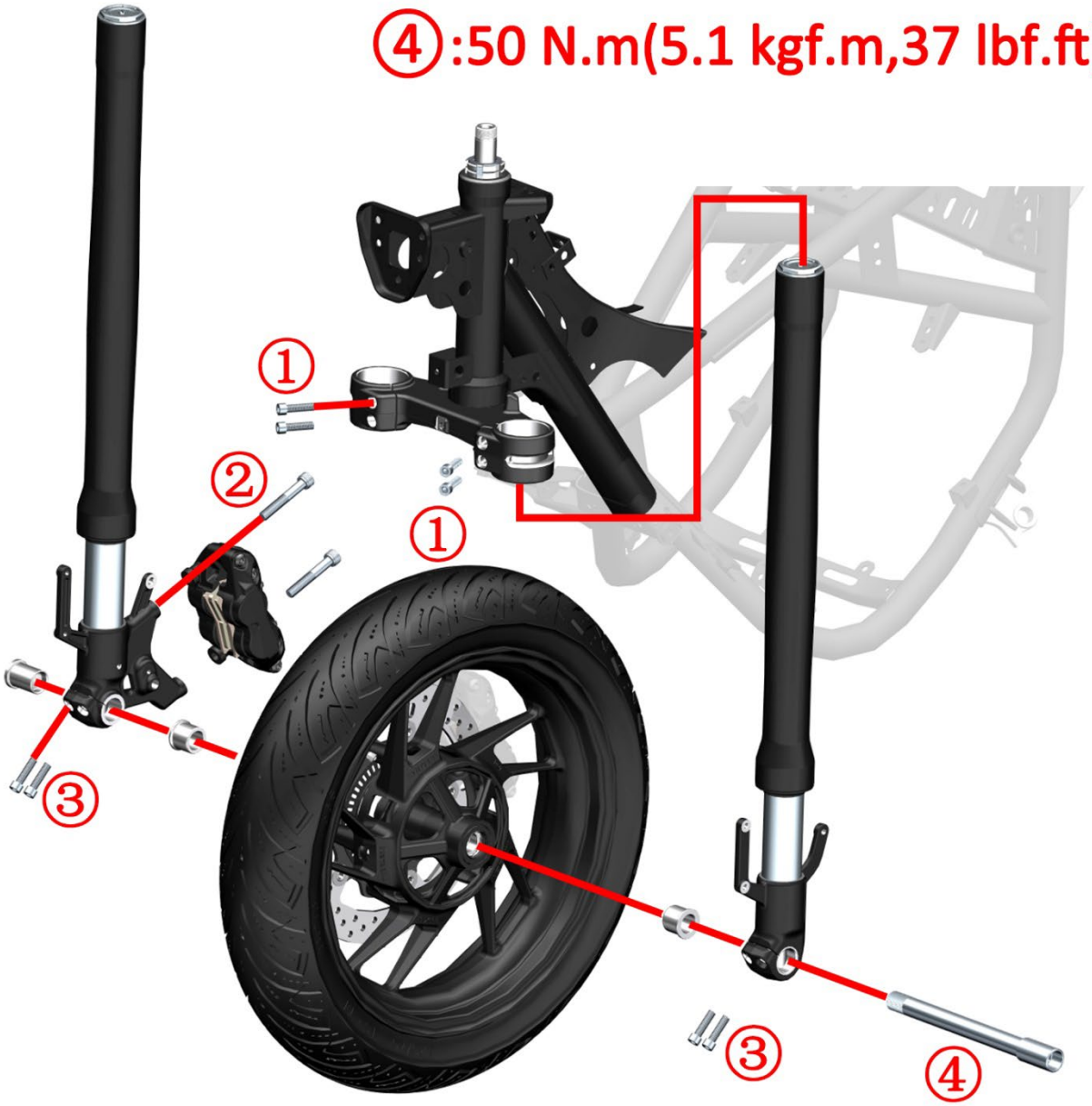

Exploded view of lower link board

M125/310

The M125 are similar to the M310, taking the M310 as an example.

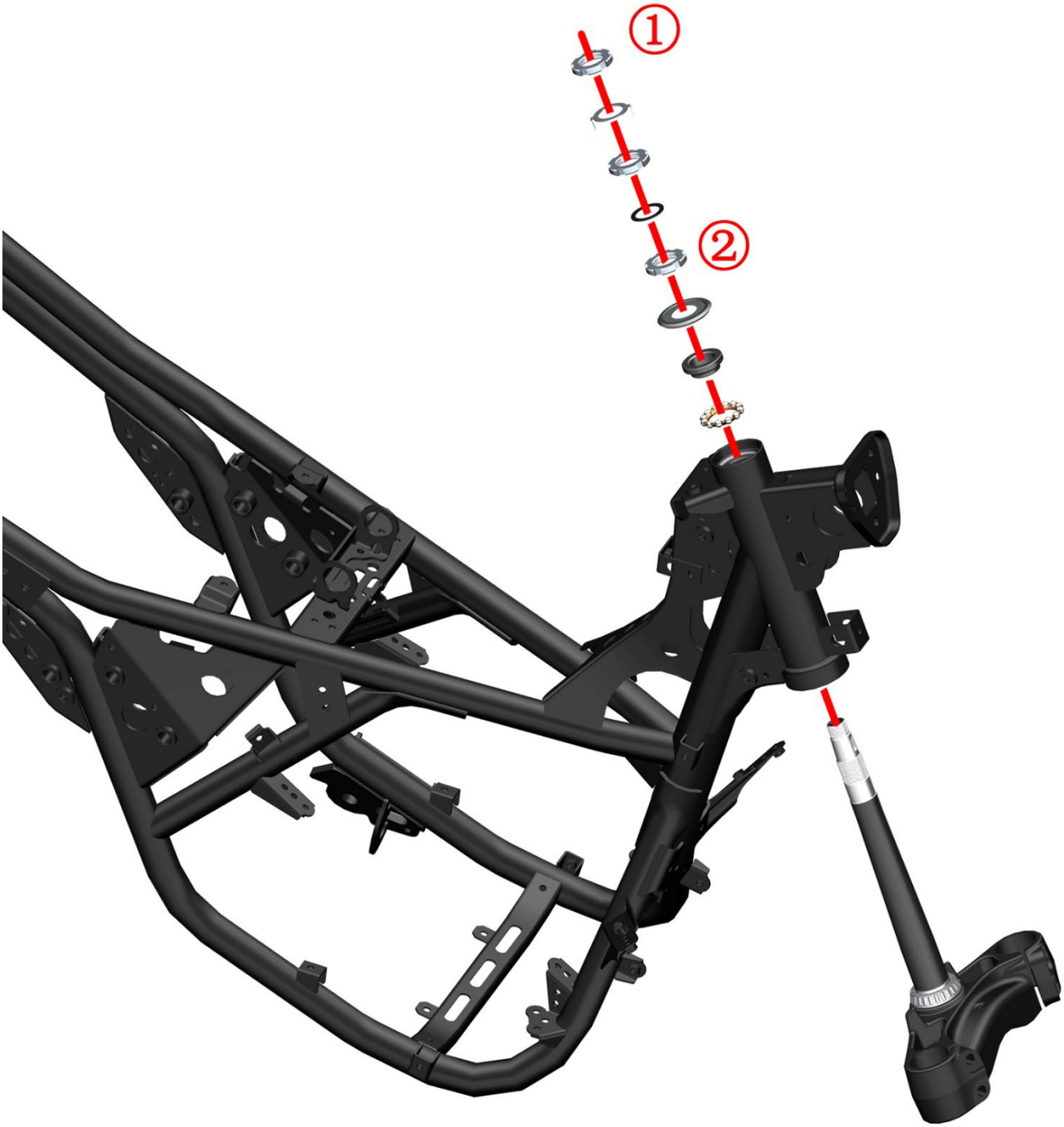

①: 100 N.m(10.2 kgf.m, 74 lbf.ft)

②: 15 N.m(1.5 kgf.m, 11 lbf.ft)

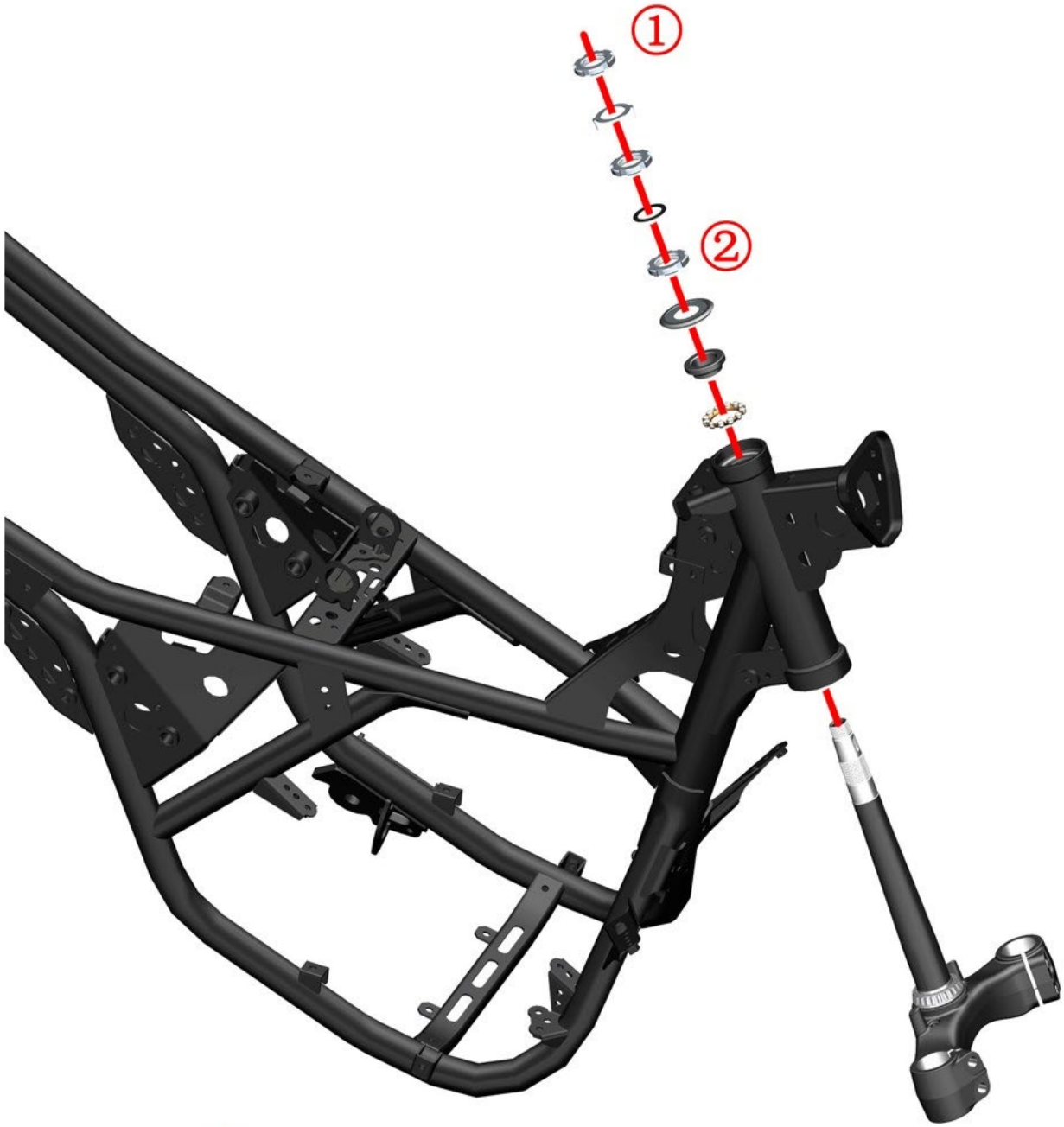

①: 80 N.m(8.2 kgf.m, 59 lbf.ft)
②: 13 N.m(1.3 kgf.m, 10 lbf.ft)

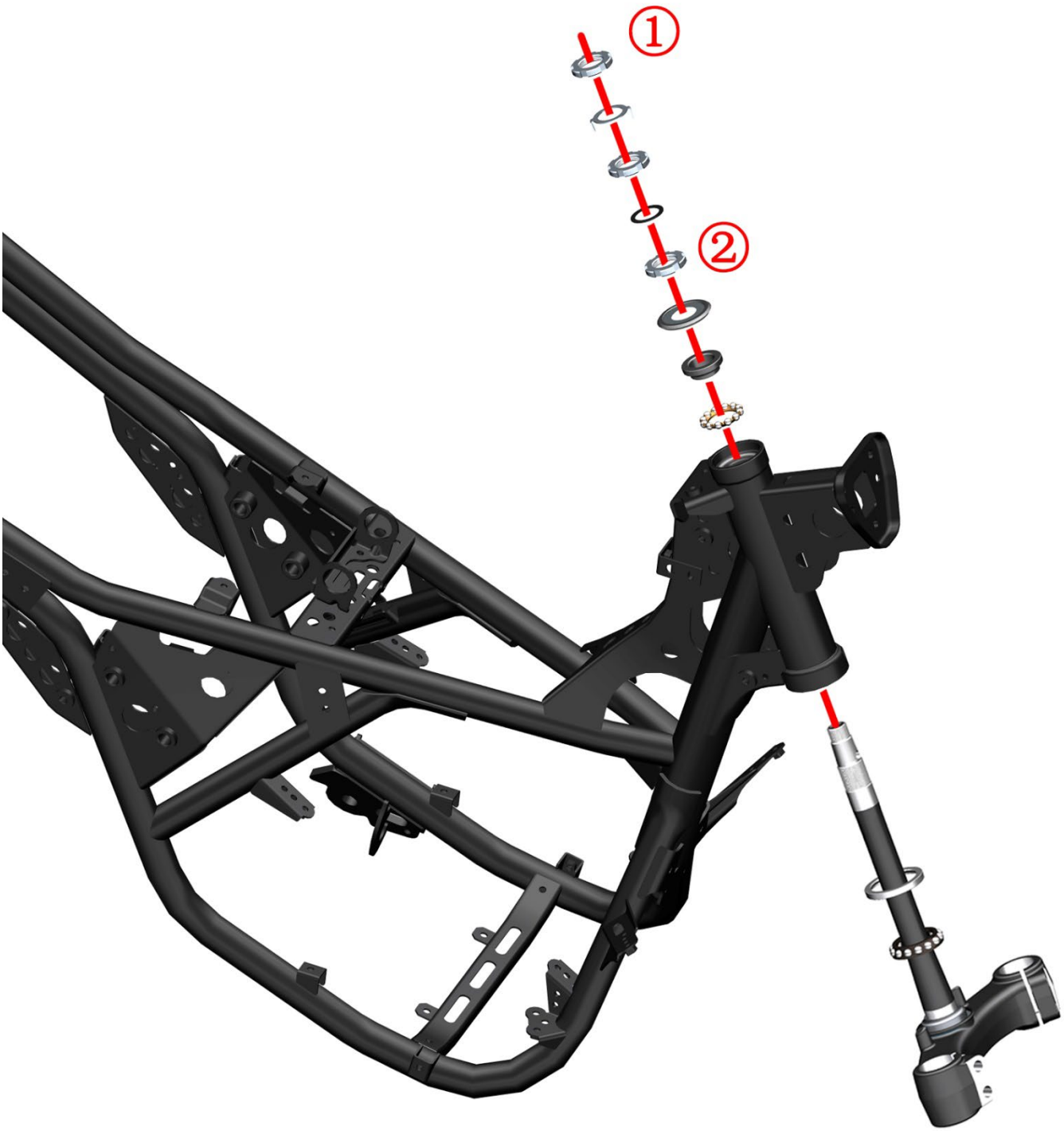

①：80 N.m(8.2 kgf.m, 59 lbf.ft)
②：13 N.m(1.3 kgf.m, 10 lbf.ft)

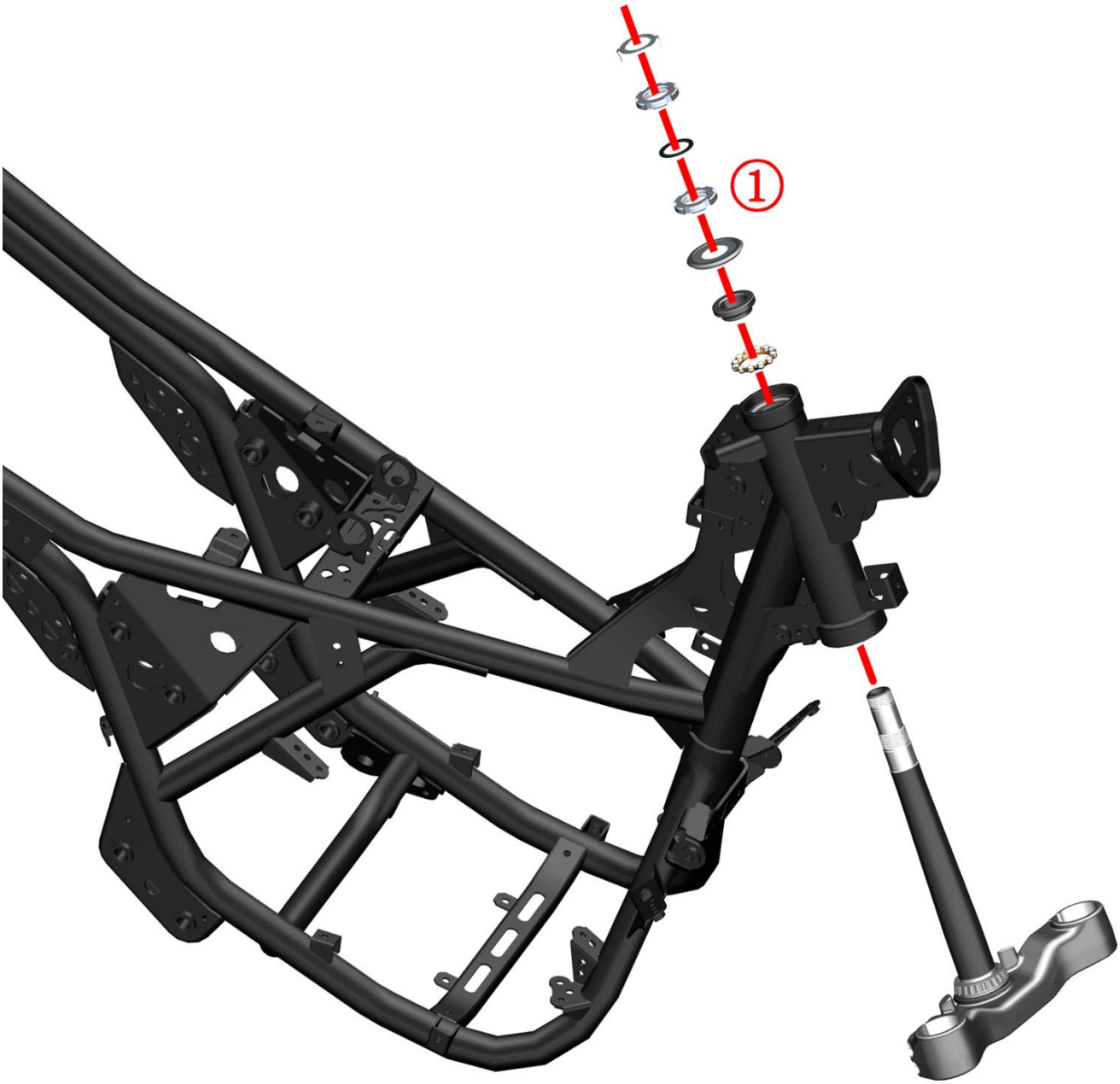

①: 15 N.m(1.5 kgf.m, 11 lbf.ft)

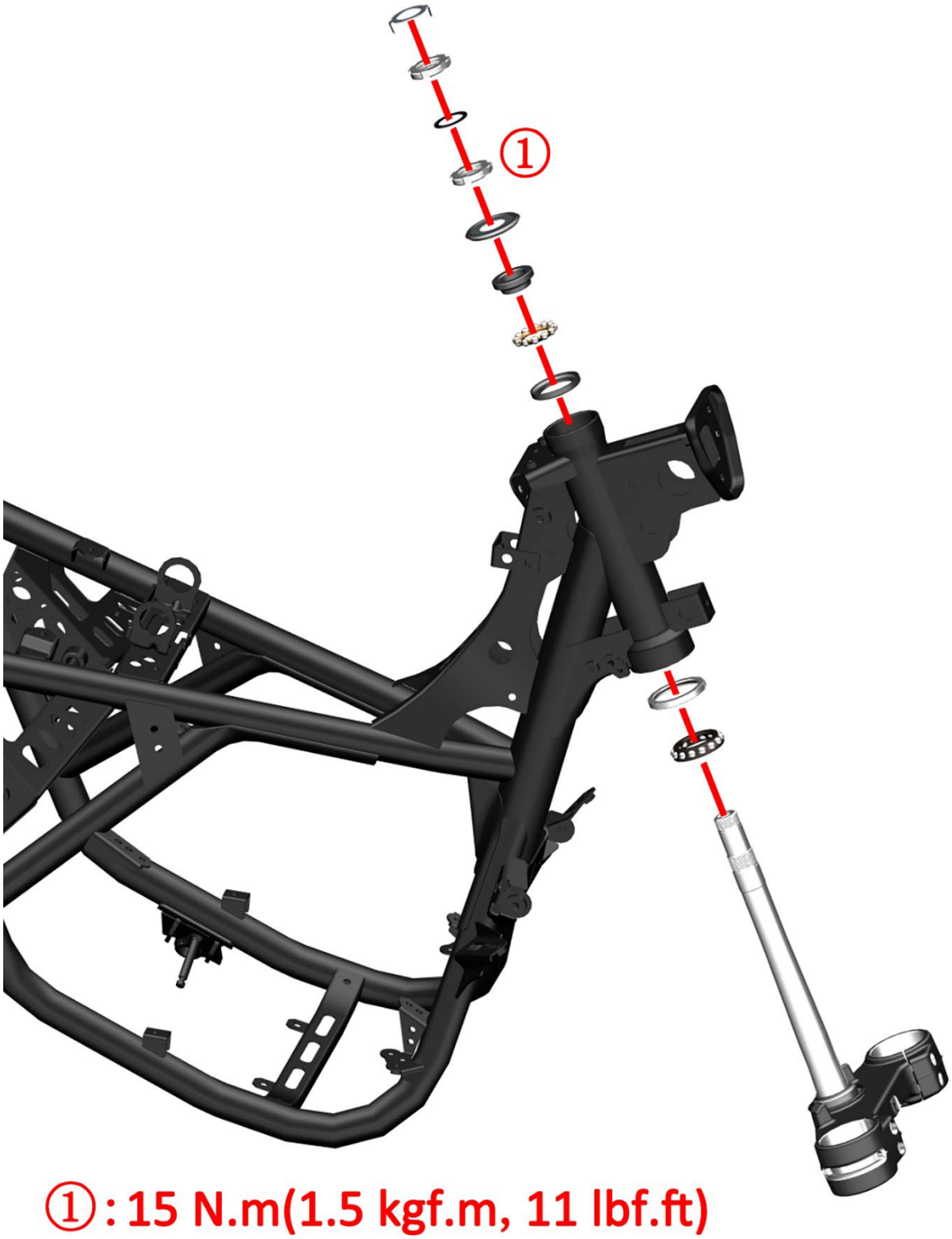
①
①: 15 N.m(1.5 kgf.m, 11 lbf.ft)

Change the direction of the handle

Caution:

●When removing the disc brake oil cup, it must be vertically upward to prevent air from entering the brake pipeline.

●When disassembling and assembling the handle switch, pay attention to adjusting the internal wiring harness of the switch to avoid damage to the wire skin caused by the shell or bolt column.

●The M125/350/155/368/150/250 steps are similar to the M310, taking the M310 as an example.

1. Remove the direction of the handle

a. Hold the middle cover in the direction with your hands, and pull out the middle cover in the direction of the arrow.

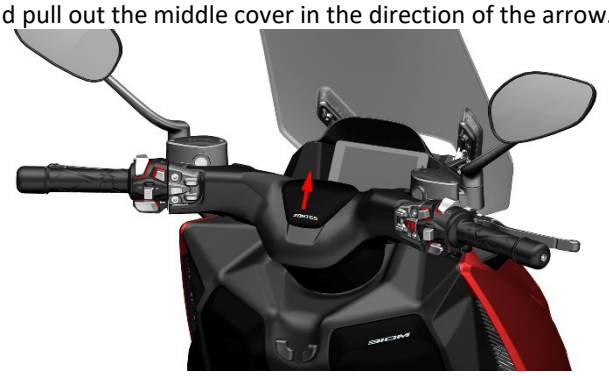

b. Use a cross screw to remove the two self-tapping screws at the lower cover, and use a straight screw to pry off the buckles at① and②.

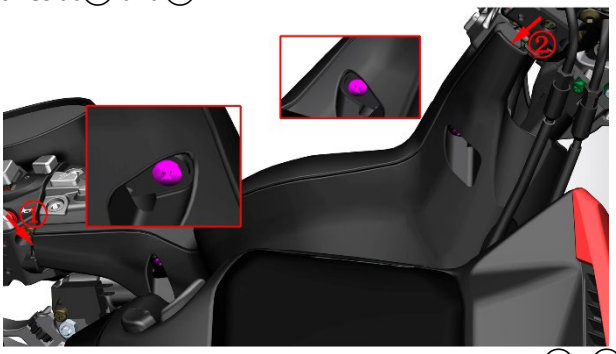

c. Use a single word batch to pick up the 3 buckles③, ④, ⑤ of the upper cover from the hole of the middle cover in the direction, grasp the direction near the side of the seat cushion, and remove the upper cover(3) in the direction of the arrow. The direction of the upper cover(3).

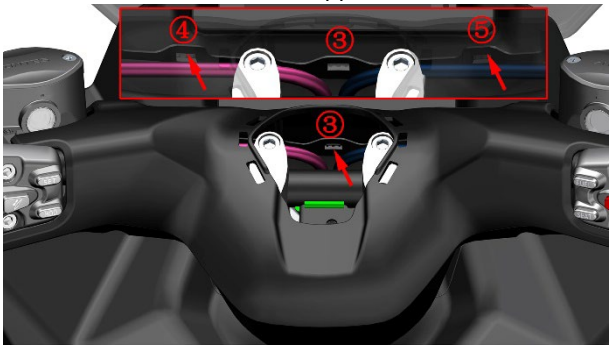

2. Remove the components M125/150/155/250/310/350/368

a. Use 5# inner hexagon to remove 4 M6×30 bolts(2), and remove the left auxiliary handle switch, the rear disc brake main pump, the right auxiliary handle switch, and the front disc brake main pump.



b. Use 4# inner hexagon to remove the bolt (maded before April 11,2023 is M6×14, after is M6×12) ; then use 6# inner hexagon to remove 4 M8×30 bolts, remove 2 pressure blocks, and take out the direction handle assembly.

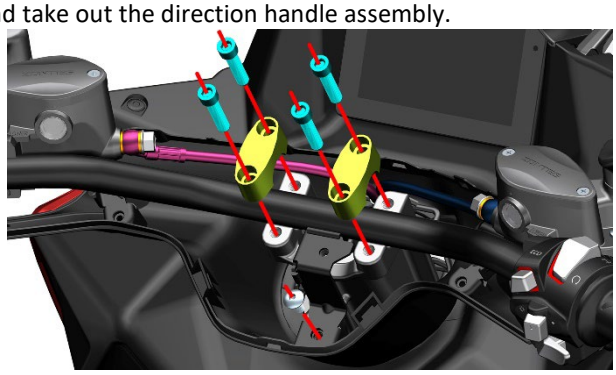

c. Use 5# inner hexagon to remove the bolts a and b that come with the right-hand handle under the switch, and then use the cross-batch to remove the bolts c, and separate the upper and lower parts of the right-hand handle.

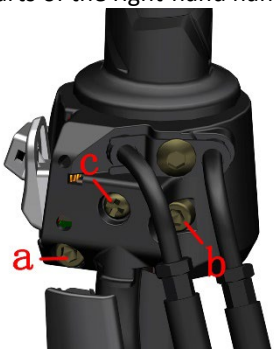

d. Remove the bolts a and b under the left-hand handle switch with a 5# inner hexagon, and then remove the bolts c with a cross-batch, and separate the upper and lower parts of the left-hand switch.

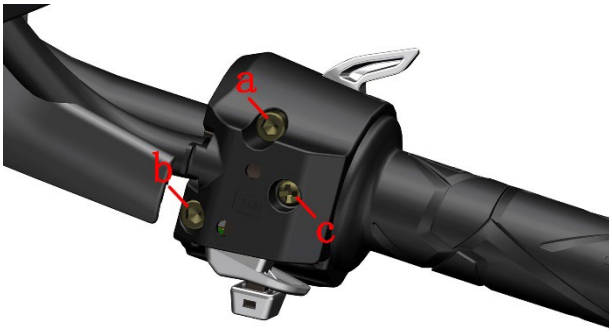

e. Use the 5# inner hexagon to loosen the M6×80 bolts of the balance weight on the right side counterclockwise for 5 turns. Be careful not to screw too many turns, otherwise the nut that comes with the balance weight will fall to the direction, which will increase the difficulty of dismantling the balance weight inside. Put the 5# hexagon socket on the head of the bolt, and then tap the M6×80 bolt inward with a rubber hammer to loosen the buffer rubber and nut of the

balance block to facilitate the removal of the balance assembly. Grasp the balance block and pull it out while shaking it up and down, left and right. Use the same method to pull out the left balance weight, soak in hot water for about 10 minutes before using Blow the dust gun into the gap between the left hand handle and the direction handle tube according to the arrow, then pull the direction handle and the left hand handle in the opposite direction, and then take out the left hand handle rubber case.

Right:



Left:



M368(ETC)

a. Use a 5# hexagon socket to remove the 4 M6×30 bolts, then remove the left handlebar half cover, rear disc brake master cylinder, right handlebar half cover, and front disc brake master cylinder.

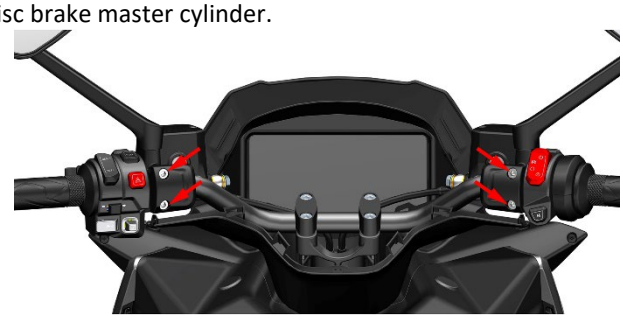

b. Press the two buckles indicated by the arrow, disassemble the fixing clip, and then unplug the plug of the right handle rubber sleeve. Use a Phillips screwdriver to remove the M4×12 screw that comes with the right handle switch, and separate the upper and of the right handle switch.



Use a Phillips screwdriver to remove two ST2.6×9.5 self-tapping screws c, one M4×30 screw d, and the spring washer. Remove the right handle switch. Note: The screws and self-tapping screws are small in size and need to be carefully stored to prevent loss.



c. Use a Phillips screwdriver to remove the 3 M4×12 screws a that come with the left handle switch, and remove the M5×25 left handle switch limit screw b. Separate the upper and of the left handle switch.

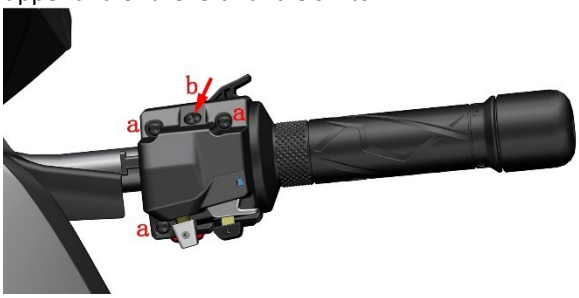

After pulling out the rubber sleeve, use a Phillips screwdriver to remove the M4×30 limit screw and spring washer.



d. Refer to the previous method to remove the balance weights on both sides, which will not be repeated here. Remove the balance weights and then remove the handlebar rubber sleeve.

e. Use a 6# hexagon socket to remove the 4 M8×30 bolts, take out the 2 pressing blocks, and pick up the handlebar. To remove the lower cover of the handlebar as follows, use a T25 Torx wrench to remove the M6×12 bolts and then take it out.

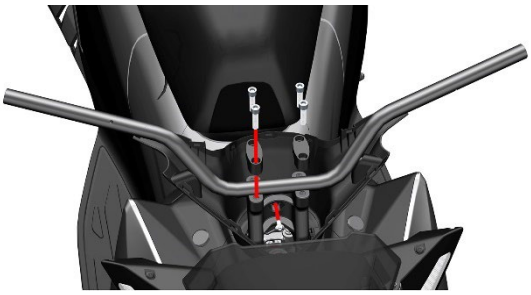

3. Installation of the direction component M125/150/155/250/310/350/368

a. Apply 263 thread fastening glue to the inner wall of the rubber sleeve in the left hand, and the length of the glue is 1/3 of the rubber sleeve of the handle, and then put the rubber in the left hand into the direction handle; the inner wall of the rubber sleeve in the right hand does not need to be coated with the thread fastening glue. Just load it. Be careful not to remove the throttle cable on the rubber sleeve with your right hand. Reinstall the left and right balance

weights according to the disassembly steps, and tighten the M6×80 bolt with a 5# inner hexagon.

b. When installing the left and right handle switches, you need to align the cross screrws with the positioning holes⑥ and then tighten them with a cross screw. Use a 5# inner hexagon to tighten the other bolts.



c. When installing the auxiliary handle switch, align the joint surface of the auxiliary handle switch and the main pump of the disc brake with the triangle mark on the handle switch, and then tighten the 4 M6×30 bolts with a 5# inner hexagon.



d. Snap the upper brackets⑦,⑧, and⑨ into the lower part of the direction control cover, buckle the pressure block, tighten 4 M8×30 bolts with 6# inner hexagon, and use 5# inner hexagon to fix 1 non-standard M6 Tighten the ×16 bolt (3), be careful not to miss the bushing(5) and cushion rubber (6); then use a 5# inner hexagon to install a non-standard M6×16 bolt(3) + spring washer(4) to fix the mobile phone bracket installation bracket.



M368(ETC)

The M368 (ETC) handlebar rubber sleeve is limited by an M4×30 bolt, and the disc brake master cylinder is aligned with the recess on the handlebar.



4. Installation of the direction handle cover

a. When installing the upper cover in the direction, first install the upper cover in the appropriate position, first buckle the buckles a, b, and c on the front of the upper cover in the direction, and then buckle the back buckles③,④,⑤ and The buckles① and② on both sides should be fastened. After installation, the upper cover should be tightly fitted with the lower cover, and the gap should be even. Finally, tighten the 2 self-tapping screws at the lower cover (1) with a flat-head screwdriver.

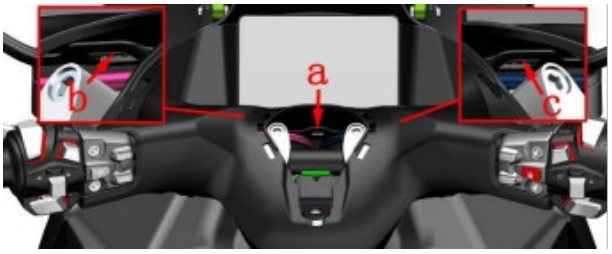

b. Finally, put the direction back on the middle cover.

WARNING

●Attention should be paid when disassembling the direction handle cover to prevent damage to the buckle.
●After installation, check whether the throttle cable is assembled in place and whether the return position is flexible.
●Self-tapping screws need to be installed vertically and the torque cannot be too large.
●After installation, check the switch buttons of the left and right handle switches and the left and right auxiliary handle switches to check whether they can be used normally, and check whether there is a pressure line.

Replace the front wheel

Caution:

●Be careful not to damage the ABS coil when disassembling.

●After removing the front wheel, do not press the brake handle.

●The vehicle must be parked on a flat and stable ground or a lifting platform.

●It is forbidden to use a high-pressure water gun to flush against the oil seal at close range.

●The M125/350/368/155/150/250/368(ETC) steps are similar to the M310, taking the M310 as an example.

1. Remove the front wheel assembly

a. Lay down the main support, and then use a jack or a suitable device to support the whole vehicle to keep the front wheels off the ground.

b. Use 6# inner hexagon to loosen the two M8×35 bolts at the front left shock absorber (1), then use 17# inner hexagon to remove the front wheel shaft (2), and remove the front wheel and 2 bushings.

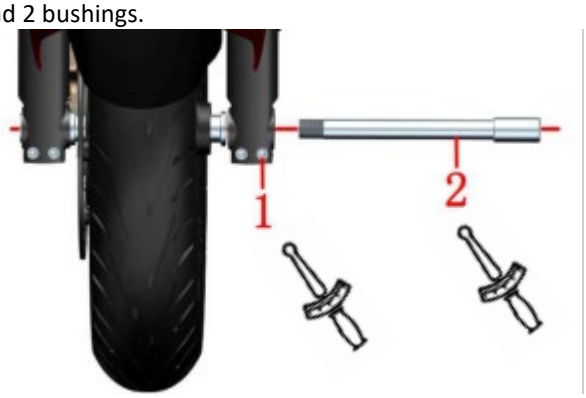

2. Install the front wheel assembly

a. Separate the two brake pads in the brake caliper with a single-size batch. If the resistance is too large and the two brake pads cannot be separated, please refer to the method of "Adding Brake Fluid" to remove the upper cover of the disc brake oil cup and then separate it. 2 brake pads.

b. Put the front wheel in the middle of the front shock absorber, shake the front wheel left and right to make the disc brake disc snap into the middle of the brake pad, align the shaft hole, insert the front wheel shaft(2), tighten the front wheel shaft with 17# inner hexagon, torque: 50N. m (5.1 kgf.m, 37 lbf.ft), after the front wheel axle is tightened, for the left front wheel bushing of 125/150/155/250/310, there is a gap of approximately 2.5mm with the shock absorber, while that of 350/368 is about 2mm. Use 6# inner hexagon to tighten the two front left shock absorbers M8×35 bolt(1), torque: 20N.m (2.0 kgf.m, 15 lbf.ft).

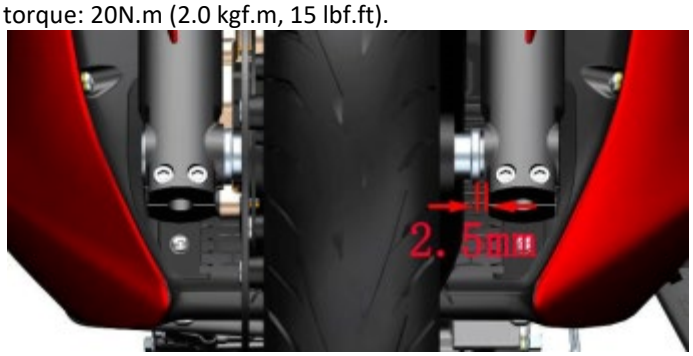

DANGER

●After the front wheel is installed, please press the brake handle repeatedly until the brake restores the braking effect.

●Contaminated disc brake discs and disc brake pads will reduce the braking effect. Please replace with new disc brake discs and clean the contaminated brake discs.

WARNING

●After each front wheel replacement, you must go to a professional organization for dynamic balance testing.

●Because the tire self-refilling may block the air hole of the tire pressure monitoring sensor, causing difficulty in inflation or failure of the tire pressure monitoring, it should not be used.

Front wheel assembly exploded view：

M310

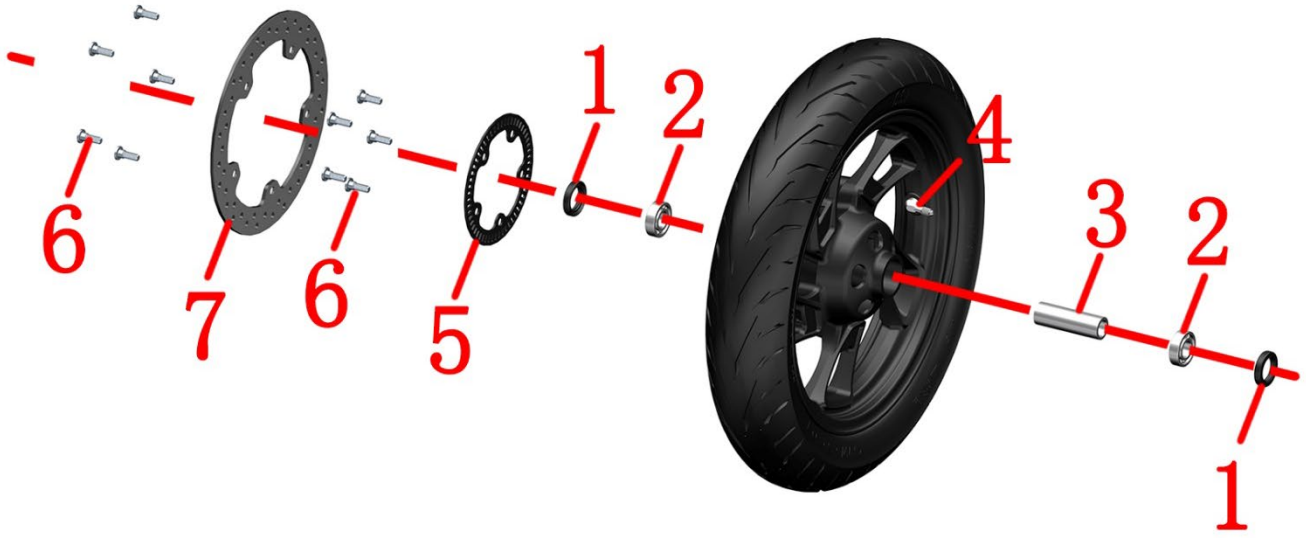

NO.	Part name	QTY	Caution
1	Oil seal TC ϕ28×ϕ42×7	2	
2	GB276 bearing 6004-2RS-C3	2	ϕ20×ϕ42×12
3	Sleeve	1	
4	Tire pressure sensor	1	
5	ABS sensor gear（55T）	1	
6	Non-standard bolt M8×25	10	25 N.m(2.5 kgf.m，18 lbf.ft)
7	265×4.5 brake disc	1	

M125/155/150

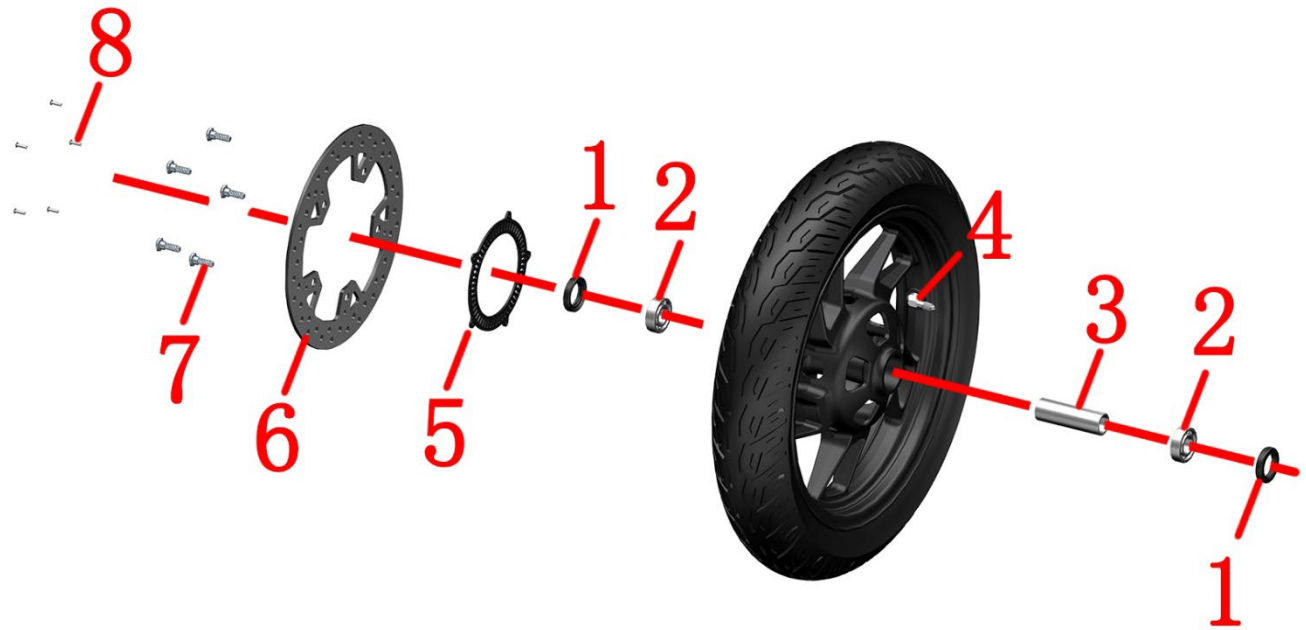

NO.	Part name	QTY	Caution
1	Oil seal TC ϕ28×ϕ42×7	2	
2	GB276 bearing 6004-2RS-C3	2	ϕ20×ϕ42×12
3	Sleeve	1	
4	Tire pressure sensor	1	
5	ABS sensor gear（55T）	1	
6	265×4.5 brake disc	1	
7	Non-standard bolt M8×25	5	25 N.m(2.5 kgf.m，18 lbf.ft)
8	GB12615 ϕ3.2×9	5	

M350/250



NO.	Part name	QTY	Caution
1	Oil seal TC ϕ28×ϕ42×7	2	
2	GB276 bearing 6004-2RS-C3	2	ϕ20×ϕ42×12
3	Sleeve	1	
4	Tire pressure sensor	1	
5	ABS sensor gear（55T）	1	
6	265×5.0 brake disc	1	
7	Non-standard bolt M8×25	5	25 N.m(2.5 kgf.m，18 lbf.ft)
8	GB12615 ϕ3.2×9	5	

M368



NO.	Part name	QTY	Caution
1	Oil seal TC ϕ28×ϕ42×7	2	
2	GB276 bearing 6004-2RS-C3	2	ϕ20×ϕ42×12
3	Sleeve	1	
4	Tire pressure sensor	1	
5	265×5.0 brake disc	1	
6	Non-standard torx bolt M8×25	5	25 N.m(2.5 kgf.m，18 lbf.ft)　T45 torx wrench

M368(ETC)



NO.	Part name	QTY	Caution
1	Oil seal TC ϕ28×ϕ42×7	2	
2	GB276 bearing 6004-2RS-C3	2	ϕ20×ϕ42×12
3	Sleeve	1	
4	Tire pressure sensor	1	
5	265×5.0 brake disc	1	
6	Non-standard torx bolt M8×25	5	25 N.m(2.5 kgf.m，18 lbf.ft)　T45 torx wrench

Inspection and maintenance of front wheel assembly

Caution:

●This inspection should be completed by a qualified maintenance organization.

●Do not press the brake handle after the front wheel is disassembled

●Be careful not to damage the ABS coil when disassembling.

●The vehicle must be parked on a flat and stable ground or a lifting platform

●It is forbidden to use a high-pressure water gun to flush against the oil seal at close range.

1. Disc brake

1.1 The service life of the disc brake disc

Under normal circumstances, the replacement mileage of the brake disc is about 40,000 kilometers. The replacement mileage is not absolute. It needs to be determined according to the owner's travel habits (whether you like sudden braking), road conditions, maintenance intervals and other factors, but if the following three conditions are reached If any of them, they must be replaced.

a. Use a vernier caliper to measure the thickness of the M125/310/155/150 disc brake disc less than 4.mm (0.16 in), and the thickness of the M350/368/250 is 4.5mm (0.177 in).

b. Hang the front wheel in the air, observe from the front that the disc brake disc swings when the front wheel rotates, and the disc brake disc deformation is detected.

c. Touch the surface of the disc brake disc with your hands to detect obvious pits, visually inspect for deep scratches and grooves.

1.2 Disc brake Replacement method

a. Refer to "Replace the front wheel" Remove the front wheel assembly.

b. The M125/155/350/150/250 use 6# hex socket and the M368/368(ETC) use T45 torx wrench to remove 5 M8×25 bolts and remove the damaged disc brake disc.

c. After reinstalling the new disc brake disc, use 6# inner hexagon for M125/155/350/150/250 models or T45 torx wrench for M368/368(ETC) to tighten 5 M8×25 bolts. Torque: 25N.m (2.5 kgf.m, 18 lbf. ft).

The M125/155/350/368/150/250/368(ETC) front disc brake disc is a floating disc, and the ABS gear ring is connected to the disc brake disc body by rivets. If you only need to replace the disc brake disc, you need to use a grinding pen to polish off the rivet bulge and then remove the gear ring first. The rivets must be made of stainless steel, not aluminum.

d. Reinstall the front wheel assembly.

2. Front wheel oil seals and bearings

2.1 Service life of front wheel oil seals and bearings

Under normal circumstances, the bearings and oil seals in the front axles need to be inspected within 50,000 kilometers, but the bearings and oil seals in the front axles need to be inspected according to the actual conditions of the vehicle's driving conditions and the size of the load. Into the oil seal and bearing, the fine dust in the water will accelerate the wear between the bearing and the oil seal. At the same time, the mixed friction of water and grease becomes an emulsion and loses the original lubricating effect. This also shortens the service life between the oil seal and the bearing. When the following conditions occur, the front wheel oil seals and bearings should be checked in advance

a. Abnormal front wheel noise when riding.

b. When the direction bar shakes left and right when riding.

2.2 Replacement method of front wheel oil seal and bearing

a. Remove the front wheel assembly by referring to "Replace the front wheel".

b. Use a flat-headed batch to lift out the oil seals on the left and right sides of the front wheel, check whether the oil seals are damaged or deformed, check whether the outer ring of the bearing fits tightly with the rim, and if there is no abnormality, turn the inner ring of the bearing by hand to check whether the bearing rotates smoothly and if there is a jam. If it is astringent or abnormal sound, the front wheel bearing and oil seal need to be replaced.

c. The replacement of the front wheel oil seals and bearings must be completed by a professional maintenance organization.

d. If there is no problem in the inspection, apply an appropriate amount of lubricating grease on the front wheel bearing, and then press-fit the oil seal to the original position with a suitable size iron rod and rubber hammer.

e. Reinstall the front wheel assembly.

3. Front wheel rims and tires

3.1 The service life of the front wheel rim and tire

Generally speaking, rims do not have the limit of service life and kilometers, but if the following situations occur, the rims must be replaced.

a. The rim is deformed or warped.

b. Cracks or breaks in the rim

Under normal conditions, the front tires can be used for about 20,000 kilometers. Normal conditions mean that the road conditions are not bad and there is no tyre puncture. Because the tires are made of rubber, there will be aging. Generally, the tires need to be replaced in about 4 years. If you don't change it, you need to check frequently to check the tire aging and whether there are cracks in the tire. If the following conditions occur, the tires must be replaced.

a. The tire has been repaired many times.

b. When the tire tread wear reaches the limit position of the design.

c. There are many aging cracks in the tire.

3.2 How to replace the front wheel rim and tire

a. Refer to "Replace the front wheel" to remove the front wheel assembly.

b. Take the removed front wheel assembly to a professional organization and use a tyre raking machine to take out the tires.

c. Use a lifter to assemble new rims or new tires. And the front tire pressure is charged to the standard value. M310 front tire pressure: 260kPa (37.7 psi), M125/155/150: 220kPa (32 psi), M350/368/250: 240kPa (35 psi).

d. Put the assembled front wheel assembly back on the vehicle.

3.3 Dynamic balance

The wheel is a whole composed of tires and rims. Due to manufacturing reasons, the mass distribution of each part of the wheel may not be very uniform. When the wheel rotates at a high speed, it will form a dynamic imbalance state, causing wheel jitter during driving. The direction of the shaking phenomenon, in order to avoid this phenomenon or eliminate the phenomenon that has occurred, it is necessary to make the wheel in a dynamic situation by increasing the counterweight method to make the wheel correct the balance of each edge part, this correction process Is what we call dynamic balance.

The dynamic balance particles of the wheels can ensure that the wheels are more stable when rotating, reduce vibration and shaking, improve the stability and comfort of the vehicle, and are conducive to safe driving.

a. Please go to a professionally qualified organization to test the dynamic balance after each replacement of the front and rear wheels.

b. The balance weight must be attached to the designated plane (red area) of the rim.



M125/310/155/150 replacement of the front shock absorber

Caution:

●After the front wheel is disassembled, please do not press the brake handle.

●Be careful not to damage the ABS coil when disassembling.

●When disassembling the front fender, be careful not to scratch the shock absorber or the front fender.

●When removing the shock absorber, first remove the 2 bolts that fix the same shock absorber, remove one side of the shock absorber, and then remove the other side.

●The M125/155/150 steps are similar to the M310, taking the M310 as an example.

1. Disassemble the front wheel and front fender assembly

a. Refer to "Replace the front wheel" to remove the front wheel.

b.Use 5# inner hexagon to remove one M6×30 bolt(1), and take out the pipe clamp. Then use a 14# sleeve to remove two M8×37 bolts (2), and remove the front brake caliper.



c.Use 4# inner hexagon to remove the two M6×14 bolts(3) on the left and right sides of the front fender; then use 5# inner hexagon to remove one M6×30 bolt, take out the gasket.

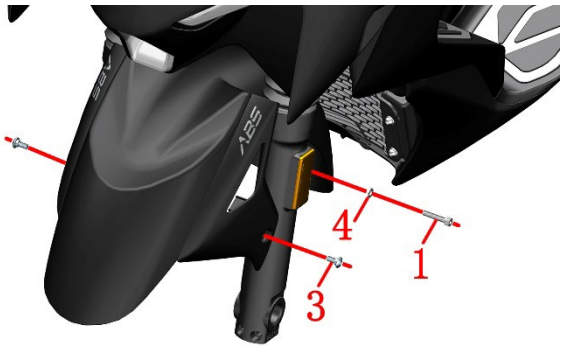

d.First press the two sides of the front mud board according to the small arrow, press the protrusion on the front mud board arrow inward, and then move the front mud board up to a suitable position and then pull it out in the direction of the big arrow.

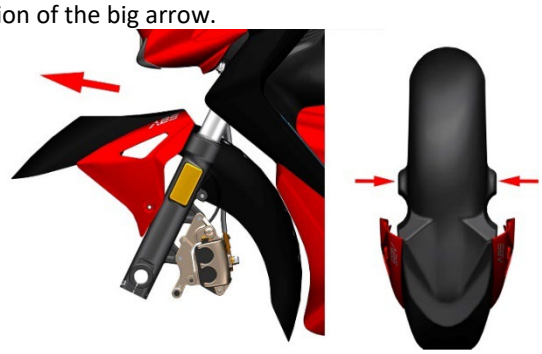

2. Remove the left and right front shock absorbers

a. Use a 14# sleeve to remove the 4 M10×1.5×43 bolts, pry open the gap on the lower link plate with a straight batch, and remove the front left shock absorber and the front right shock absorber.

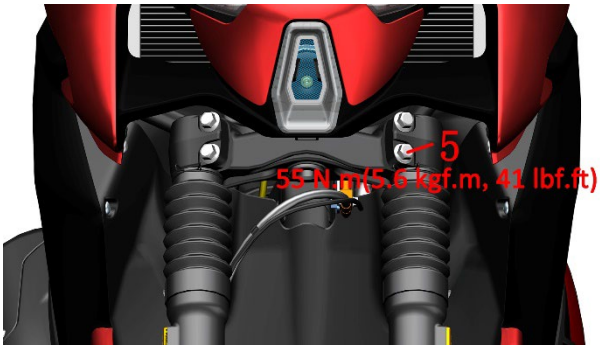

3. Reinstall the shock absorber, front fender, front wheel and other components

a. Pry a gap on the lower connecting plate with a flat-headed batch, insert the corresponding shock absorber, install the shock-absorbing in place, take the next batch, screw in two M10×1.5×43 bolts, use a 14# sleeve Tighten two M10×1.5×43 bolts, torque: 55N.m (5.6 kgf.m, 41 lbf.ft).



b. Use the same method to install another shock absorber.

c. Pick up the front wheel and install the bushing, align the mounting holes between the two shock absorbers, penetrate the front wheel axle, and tighten the front wheel axle with a 17# inner hexagon. Torque: 50N.m (5.1 kgf.m, 37 lbf.ft). If one of the shock absorbers is not installed in place, the front axle will not be tightened or can not be inserted into the right shock absorber. You need to remove the shock absorber that is not in place and install it in place.

d. After installing the front wheel, use the 6# inner hexagon to tighten the two M8×35 bolts at the bottom of the left front shock absorber, torque: 20N.m (2.0 kgf.m, 15 lbf.ft).

e. First use a single batch to separate the two brake pads inside the brake caliper. If the resistance is too large and the two brake pads cannot be separated, please refer to the method of "Adding Brake Fluid" to remove the upper cover of the disc brake oil cup and then separate it. 2 brake pads, align the gap between the 2 brake pads in the disc brake caliper with the brake disc on the front wheel and install it. Then use a 14# sleeve to tighten two M8×37 bolts (2), torque: 24N.m (2.5 kgf.m, 18 lbf.ft).

f. Press the position held when the front mud plate is removed, pass through the appropriate position in the middle of the shock absorber, and install it to the corresponding position, use the 4# inner hexagon to reinstall the 2 M6×12 bolts (3), do not miss the installation of the lining Set(4), and cushion rubber(5). Then use the 5# inner hexagon to reinstall the two M6×30 bolts(1), Caution: the left M6×30 bolt(1) needs to have a spring washer(6).

DANGER

●The vehicle must be parked on a level and stable ground or on a lifting platform.

●After the front wheel is installed, please press the brake handle repeatedly until the brake restores the braking effect.

M350/368/250/368(ETC) replacement of the front shock absorber

1. Disassemble the front wheel and front fender assembly

M350/368/250

a. Remove the front wheel by referring to Replacing the Front Wheel.

b. Use a 4# hexagon socket to remove 1 M6×14 shoulder bolt (1). Use a 5# hexagon socket to remove 1 M6×30 bolt (3), and take out the pipe clamp. Then use an 8# hexagon socket to remove 2 M10×1.5×60 bolts (5), and remove the front brake caliper from the front shock absorber bottom tube. Use a 4# hexagon socket to remove 1 M6×12 bolt (2). The pipe clamp of the early-produced M350 does not have a gasket (4).

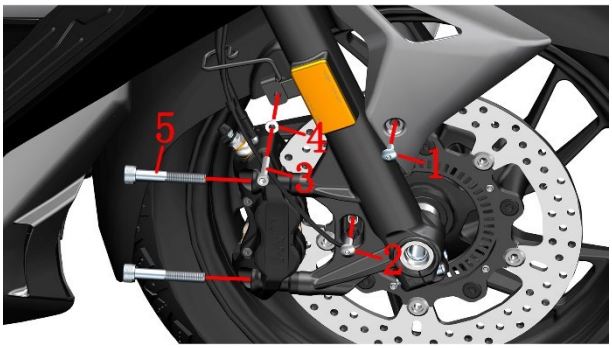

c. Remove the two M6x14 bolts on the left and right sides of the front clay plate using the 4# hex socket; Then remove one M6x30 bolt with the 5# hex socket and take out the gasket.



d. Press both sides of the front clay tablet according to the small arrows and push the bulge at the arrows inward. Then move the front clay tablet upwards to the appropriate position and pull it out in the direction of the large arrows.



M368(ETC)

a. Refer to "Replace Front Wheel" to remove the front wheel.

b. Use a T25 Torx wrench to remove 2 M6×16 shoulder bolts (1) and bolt (2). Use an 8# socket to remove the M6×22 bolt (3), remove the washer (4), and take out the pipe clamp. Then use an 8# hex key to remove 2 M10×1.5×60 bolts (5), and remove the front brake caliper from the front shock absorber bottom tube.

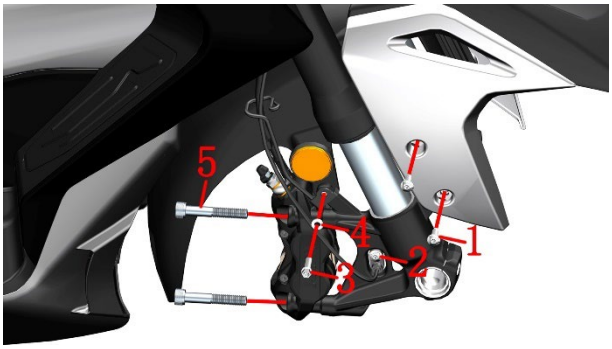

c. Use a T25 Torx wrench to install two M6×16 shoulder bolts (1). Use an 8# socket to remove the M6×16 bolt (6) and then remove the washer (4).

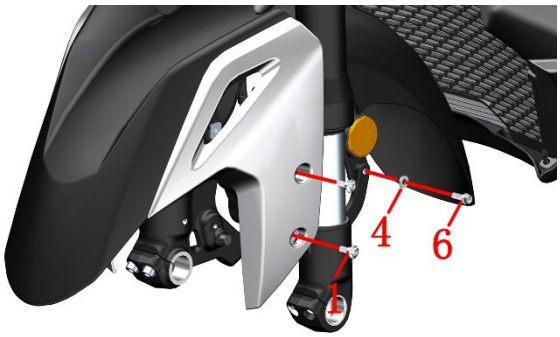

d. First, press both sides of the front mud panel along the small arrow, push the protrusion at the arrow of the front mud panel inward, then move the front mud panel upward to the appropriate position and pull it out in the direction of the large arrow.





2. Remove the left and right front shock absorbers

a. Open the lid of both storage boxes. Remove twoM6x14 bolts above the right storage box with 4# hex, one M6×16 bolt below it and one expansion. Pull the storage box cover assembly out for a certain distance, and then pull out the inductive antenna plug on the back of the arrow. Remove the left storage box assembly in the same way, and unplug the USB charging cable.

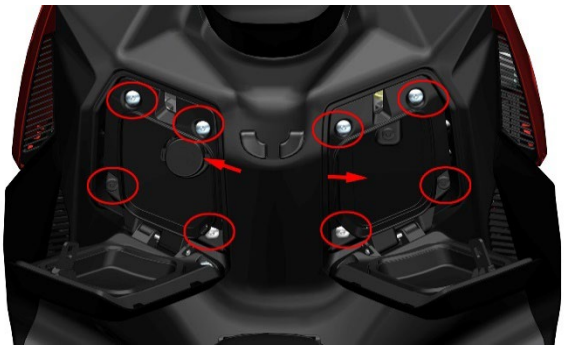

b. Turn the direction to the far left and use the 6# hex to remove the M8x35 bolt. In the same way, turn the direction to the far right and remove the bolt. Use a flat-head screwdriver to pry open the gap on the upper connection board.

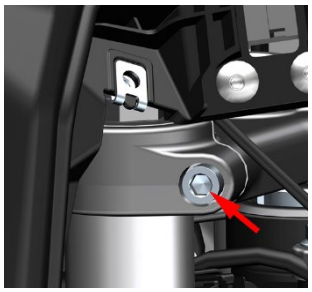

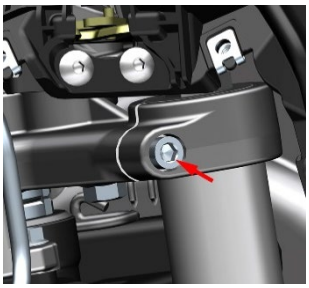

c. Use a 6# hex to remove the four bolts of the M8x35, pry open the gaps in the lower connection plate with a flat-head screwdriver, and remove the left front shock absorber and the right front shock absorber.

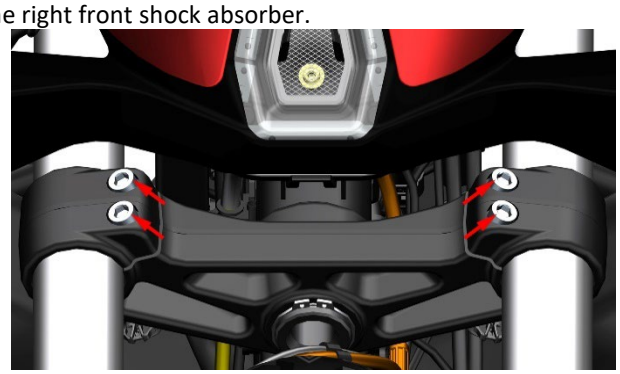

3. Reinstall the shock absorber, front fender, front wheel and other components

a. Use a flat-head screwdriver to pry open a gap on the connection plate and insert corresponding shock absorber.

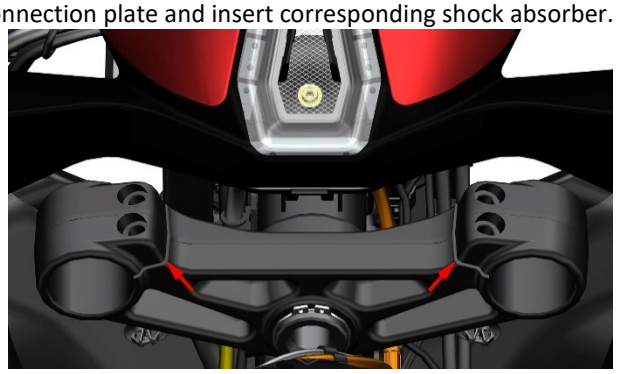

b. Use a flat-head screwdriver to pry open a gap in the upper connection plate and insert the corresponding shock absorber into the gap. Ensure that the upper end face of the shock absorber is flush with the upper end face of the upper connection plate. Remove the flat-head screwdriver after installing the shock absorber in place. Screw in M8x35 bolts and tighten with 6# hex. Torque: 25N.m(2.6kg f.m,18 lbf.ft).

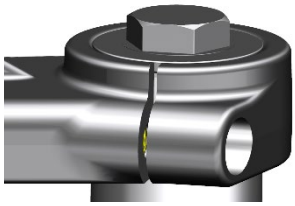

c. Install the two M8x35 bolts to lower connection plate and install the other shock absorber in the same way.

d. Pick up the front wheel, install the bushing, align the mounting holes between the two shock absorbations, Pierce the front axle, use 17# hex to tighten the front axle, torque force: 50N.m (5. 1kgf.m, 37 lbf.ft).If one of the shock absorbers is not installed in place, the front axle will not be tightened or cannot be penetrated into the right shock absorbers. Remove the shock absorbers that are not installed in place and install them in place.

e. After the front wheel is installed, use 6# hex to tighten the two M8×35 bolts at the lower part of the left front shock absorption, and the torque force is 20N.m (2.0 kgf.m, 15 lbf. ft).

f. Use a slotted screwdriver to separate the brake pads inside the brake caliper. If the resistance is too great to separate the two brake pads, remove the upper cover of the disc brake oil cup and then separate the two brake pads. Align the gap between the two brake pads in the disc brake caliper with the brake disc on the front wheel before installing. Then use 8# hex to tighten 2 M10×1.5×60 bolts, torsion force: 45 ~ 50N.m(4.6 ~ 5.1 kgf.m, 33 ~ 37 lbf. ft).

g. Press and hold the position held when removing the front mud pan, pass through the proper position in the middle of the shock absorber, and install it to the corresponding position, and then use the 4 # hexagonal socket to insert 2 pieces of M6 × 14 bolts. Then install the 2 M6x30 bolts back with 5# hex. Note: the M6x30 bolts on the left should be equipped with gaskets.

M125/310/155/150 replace the lower link board

Caution:

●After the front wheel is disassembled, please do not press the brake handle.

●When the disc brake oil cup is removed, it must be vertically upward to prevent air from entering the brake pipeline.

●After disassembly, make sure that all parts are installed correctly.

●Appropriate amount of grease should be applied when installing the bearing.

●The M125/155/150 steps are similar to the M310, taking the M310 as an example.

1. Disassemble parts ahead of time

Refer to "Replace the front wheel", "Replace the front shock absorber", "Replace the steering handle", and remove the front wheel, front shock absorber, and direction handle.

2. Remove the faucet lock

a. Turn on the vehicle, press the 2 front storage box switches at① to open the left and right storage boxes.



b. Use 4# inner hexagon to remove 4 M6×14 bolts, and 2 M6×16 bolts; then use 4# inner hexagon or other tools to remove The two swell nails on the lower storage box, take out the left and right storage boxes, the left storage box has a line connection, do not pull it vigorously, just place the foot pedal.

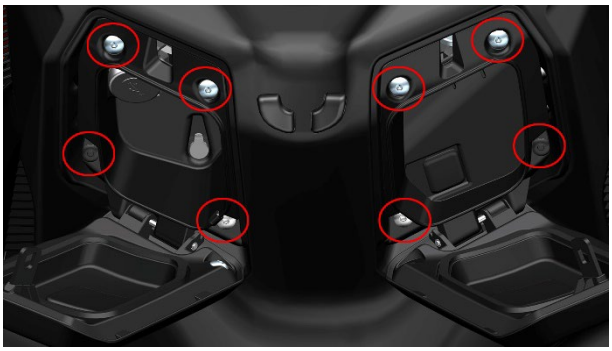

c. Extend the 10# torx wrench from the gap in the storage box, remove the two M6×20 bolts on the faucet lock support, remove the faucet lock and faucet lock support, no need to connect the faucet lock and the faucet Remove the lock and put it in a suitable place next to it.



Left

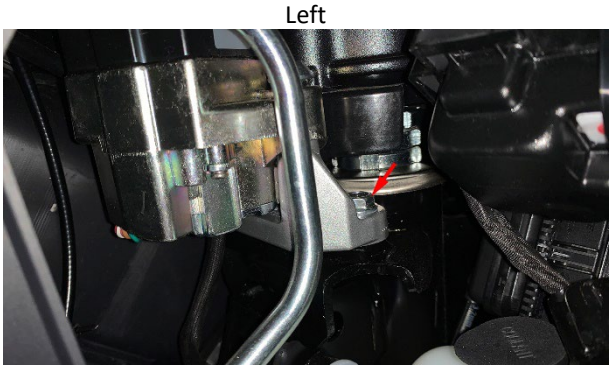

Right

3. Removing the direction pad

a. Take out the handle switch harness and brake hose in the direction wire clip from the direction of the wire clip gap one by one, until the direction is taken out all the wire harnesses in the wire clip, and then use the 4# inner hexagon to remove the M6×12 bolt that fixed direction wire, take out the direction of the wire clamp.

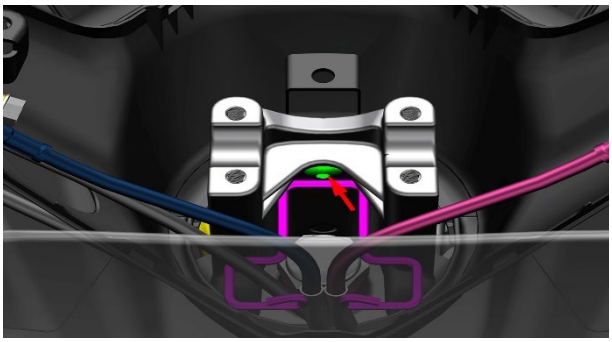

b. Use a ratchet wrench + extension rod + 30# sleeve to remove the upper link plate cover nut.

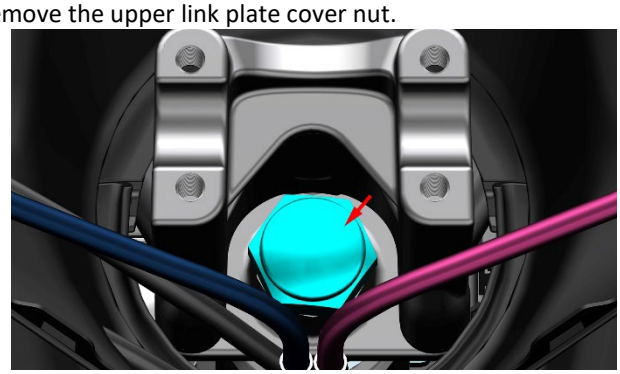

c. Install the direction base dis assembly tooling on the direction pad block, and use 6# inner hexagon to install the 4 bolts on the direction pressing block on the dis assembly tooling and tighten it. Then use the ratchet wrench +30# sleeve to screw down the dis assembly tool, and push the base and the direction handle pad block out. Finally, take out the tooling together with the direction, the pad and the direction, and take out the base together.



4. Remove the lower link board assembly

a. Use a four-jaw sleeve to remove the direction column adjustment nut on the uppermost layer of the lower link plate, take out the cassette washer, the middle direction column adjustment nut, and the adjustment nut rubber gasket. Then use a four-jaw sleeve to remove the lowermost direction column adjusting nut. Refer to the exploded view of the lower link board.

b. One person supports the lower link plate with his hand, and one person knocks the lower link plate with a rubber hammer and a suitable tool, and finally removes the lower link plate from the frame.

5. Install the lower link board assembly

a. Apply proper amount of lubricant to the new lower link assembly and install it from under the frame.



b. Put the greased bearing, shaft ring, and dust cap on the upper link plate in turn, and then screw in a steering column adjusting nut, and tighten the steering column adjusting nut with a four-jaw socket. Torque: 50N.m(5.1 kgf.m,37 lbf. ft), make sure that the upper link plate does not move up and down, loosen the direction column adjusting nut counterclockwise by 1/4 turn, and finally tighten it with a torque wrench. Torque: M125/310 are: 15N.m (1.2 kgf.m, 11 lbf. ft), M125 2024 version and M155/150/368 are 13N.m(1.3 kgf.m,10 lbf.ft) .

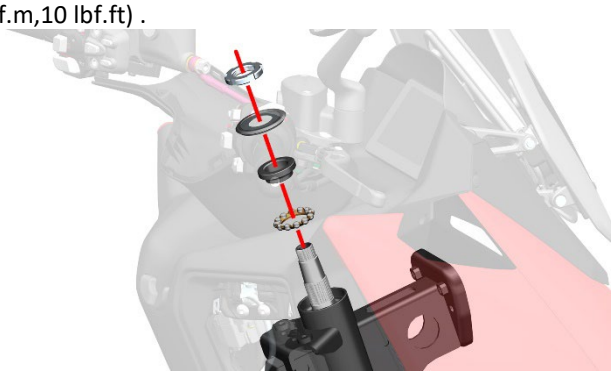

c. Put the rubber pad on the direction column adjustment nut; then screw in the second direction column adjustment nut, screw the second direction column adjustment nut to align with the notch of the first direction column adjustment nut, put Insert the snap-in gasket; finally screw in the third steering column adjusting nut, M125/310/350 tighten the nut to 100N.m (10.2 kgf.m, 74 lbf.ft),M125 2024 version and M155/150/368 are 80N.m (8.2 kgf.m, 59 lbf.ft).

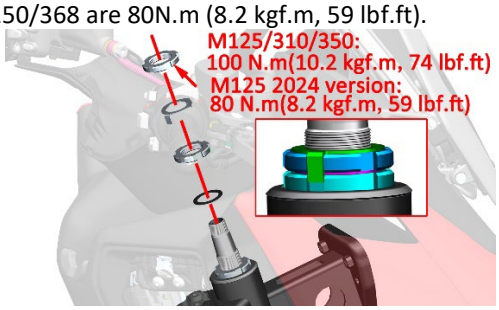

d. Install the semi-circular key in the groove of the lower link plate, then align the gap between the spacer and the base with the semi-circular key, and finally screw in the cap nut, torque: 100N.m (10.2 kgf.m, 74 bf.ft)

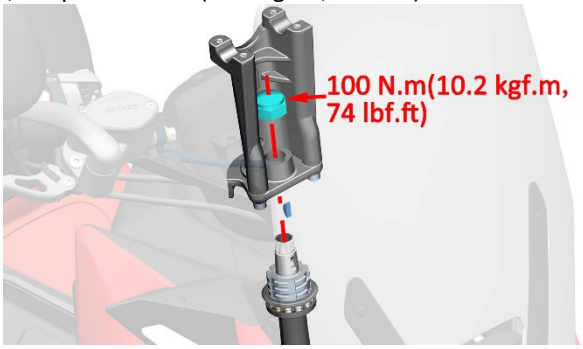

6. Install other disassembly components

a. Refer to "Replace the front shock absorber" to replace the front shock absorber.

b. Refer to "Replace the front wheel" to reinstall the front wheel assembly.

c. Refer to "Replace the direction handle" to install the assembly back in the direction.

DANGER

●The vehicle must be parked on a level and stable ground or on a lifting platform.

M350/368/250/338(ETC) replace the lower link board

The method of loading the M350/368 is basically the same as that of the M310 and will not be repeated here. The difference is that the M350/368/338(ETC) has one less adjusting nut and one more step to remove the connecting plate.

11. Disassemble the engine of the vehicle

Caution:

●The vehicle must be parked on a level and stable ground or on a lifting platform.

●The operation can only be performed after the engine has cooled down completely.

●Do not press the brake handle after removing the rear brake caliper.

●Attention and sequence when removing the plastic buckle to avoid the buckle from breaking

●Wear waterproof gloves when draining coolant to prevent it from getting on your skin.

●The storage box of subsequent production models has been changed. For disassembly and assembly, please refer to the chapter "Disassembly of the storage box" in "Disassembly of Vehicle Covers".

●The M125/350/M125(2024)/155/368/150/250/250/368(ETC) steps are similar to the M310, taking the M310 as an example.

1. Disassemble the storage box

a. Push the whole car to a wide, flat place, lay down the main bracket, and unlock the cushion lock.



b. Use a 4# socket head to remove the 2 M6×16 bolts next to the battery. Open the black protective cover of the negative terminal of the battery, and use a Phillips screwdriver to remove the negative bolt of the battery. Then lift off the red protective cover of the positive pole of the battery, use a Phillips screwdriver to remove the positive pole of the battery, take out the positive and negative wires of the battery, and then screw back the bolts on the battery with a Phillips screwdriver. Straighten out the cables after pulling up the 3 fuse boxes.



c. Use a 4# socket head to remove the 2 M6×14 shoulder bolts next to the battery. Remove the 2 expansion nails on both sides. After removing the decorative buckle at the rear, use a 4# hexagon socket to remove 2 M6×16 bolts.

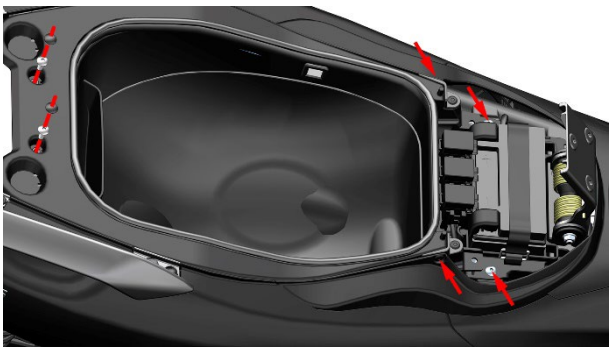

d. Lift the glove box slightly until the ambient light connector is exposed on the left side of the glove box, unplug the connector and take out the entire glove box.



e. After removing the starter relay from the battery compartment, remove the electrical box assembly.

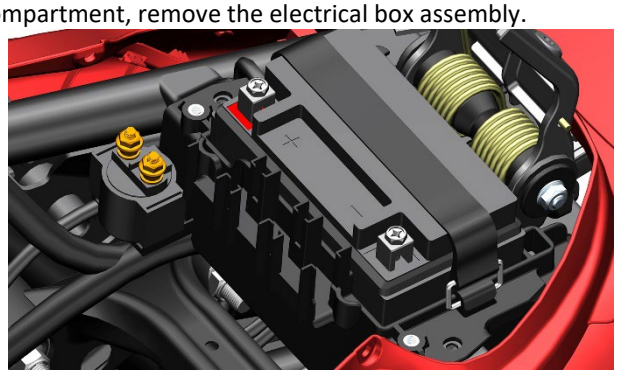

2. Remove the cover

a. Remove 7 pcs decorative glues on the rear armrest, use 4# inner hexagon to remove 2 M6×16 bolt on the front, remove the 2 swell nails on the rear armrest, use 12# sleeve Remove the 5 pcs M8×25 bolts. Remove the rear armrest.

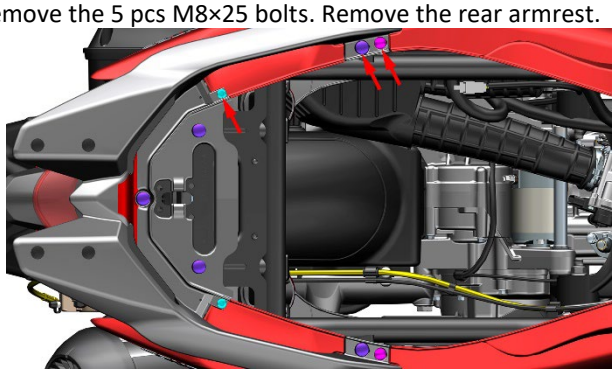

b. After putting down the right rear pedal, use a 4# inner hexagon to remove 1 M6×14 bolt on the peda.

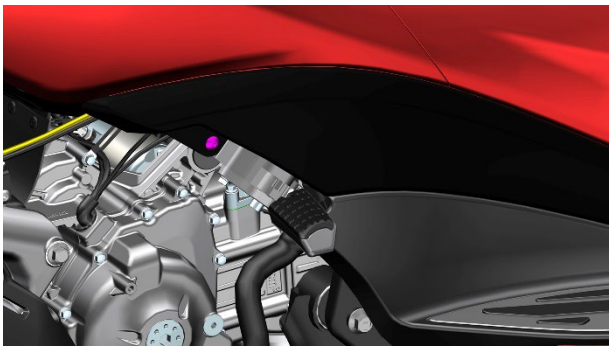

c.Then grasp the end of the side cover with your hand, and press the arrow Pull out in the direction (from back to front) until the 5 mushrooms (in the green circle) on the side cover are pulled out, and then take out the side cover.

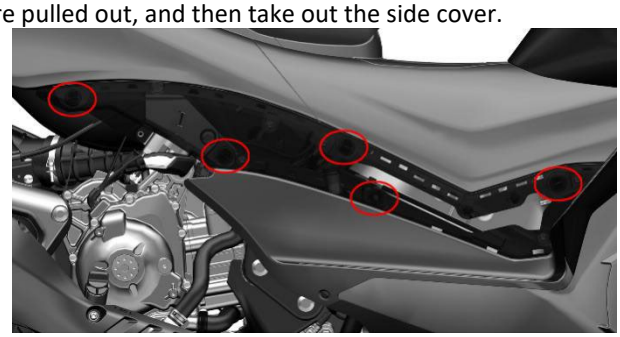

d. Use 4# inner hexagon to remove the 2 M6×14 bolts on the front of the tail skirt, and then use 4# inner hexagon to remove the 2 swell nails under the tail skirt.

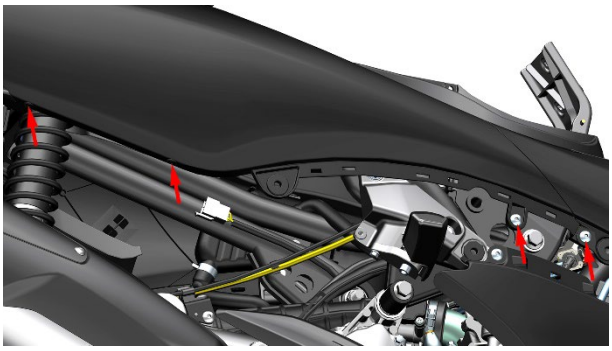

e. Use 4# inner hexagon to remove the 2 swell nails inside the tail skirt and next to the rear taillight (marked by the green circle).



f. Press down the part where the front part of the tail skirt is in contact with the right part of the fuel tank cover (golden), and pull the right part (golden) of the fuel tank cover with one hand until the front of the tail skirt is pulled out; then hold the middle part of the fuel tank with the other hand Press the cover (blue) down, grab the front part of the tail skirt with one hand and pull up until the front part of the tail skirt is separated from the middle cover (blue) of the fuel tank; hold the rear part of the tail skirt (green mark) with the last hand, Grab the front of the tail skirt with one hand and take it out in the direction of the arrow.

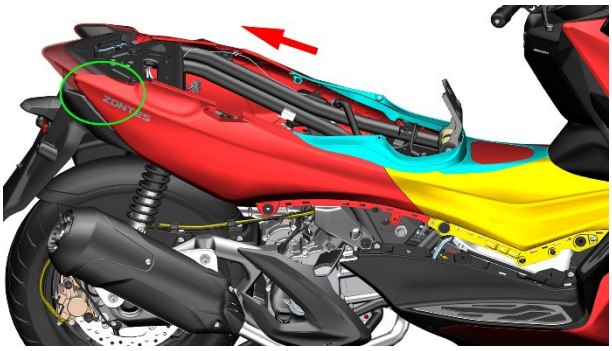

g. Refer to steps a-j in the steps of "Removing the spark plug" to remove the left and right pedals and the left and right trim cover components.

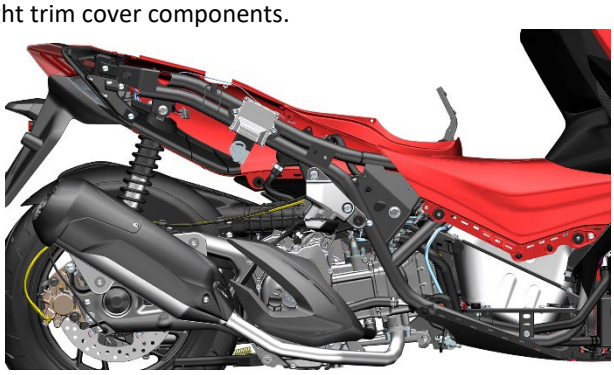

h. Pull down the connecting part of the surrounding bottom plate and the middle of the surrounding (cyan) with one hand, grasp the rear part of the surrounding bottom (green mark) and pull it in the direction of the arrow until the surrounding bottom is removed.

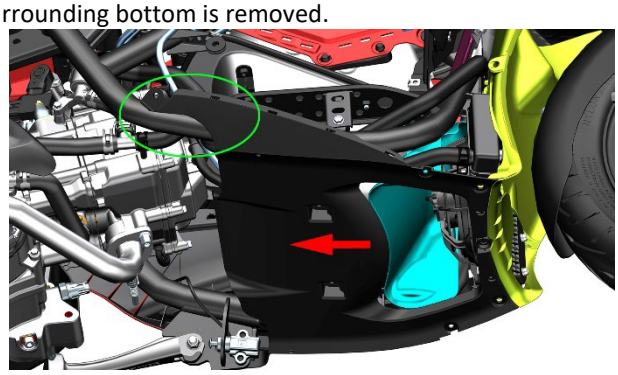

3. Put the coolant and pull out the connection plug

M125/310/350/368/250/338(ETC)

The M125/350/368/150/155/250/338(ETC) steps are similar to the M310, taking the M310 as an example.

a. Place suitable utensils under the big arrow, use water clamp pliers to remove the green hoop pointed by the big arrow, pull out the engine water inlet pipe, and let out the coolant; then use a single batch to remove the clamp pointed by the small arrow and pull it out The inlet pipe of the small water tank discharges the coolant.

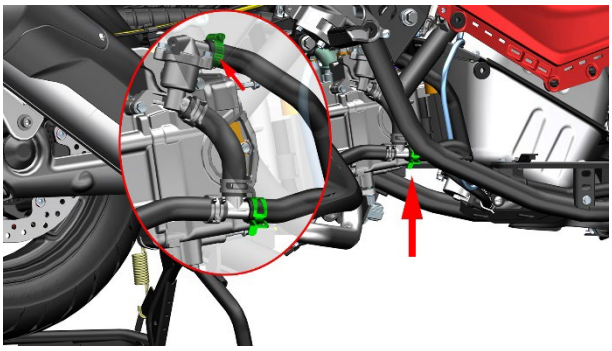

b. Unplug the high-voltage package plug from the engine head.

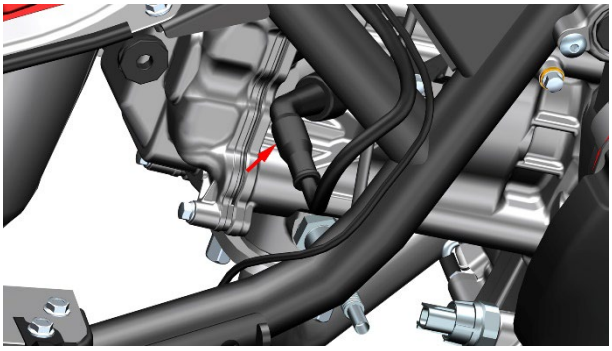

c. Refer to the steps in "Remove the Throttle Valve Body Assembly to Clean Carbon Deposits" and unplug the plugs of the stepping motor① and the three-in-one sensor② on the throttle valve body.



d. Locate and unplug the plugs of the high-pressure fuel pipe③ and the fuel injector④ at the front end of the throttle valve.

Caution: A small amount of fuel will flow out when the high-pressure oil pipe is pulled out, and it is forbidden to drip onto the surface of the part.

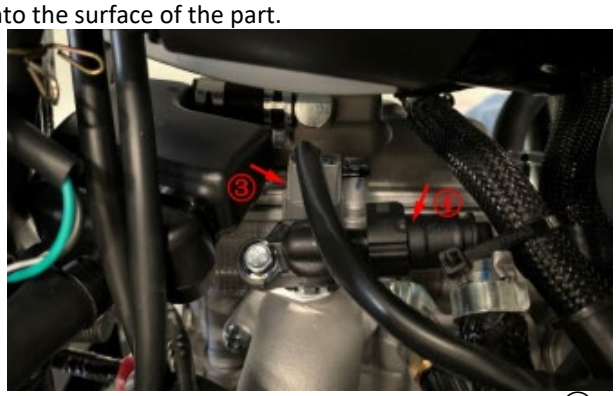

e. Locate and unplug the crankshaft position sensor⑤ and the oxygen sensor⑥ in the frame position on the right.

Caution: One end of the crankshaft position sensor is connected to the inside of the engine, one end is connected to the main cable; one end of the oxygen sensor is connected to the engine in front of the muffler, and the other end is connected to the main cable; do not unplug the wrong plug.



f. Locate and pull out the plug of the magneto stator charging cable⑦ at the left frame.

Caution: One end of the magneto stator charging cable is connected to the inside of the engine, and one end is connected to the connector on the rectifier; do not pull out the wrong plug.



g. Use an 8# sleeve to remove a bolt on the starter motor, and take out the negative wire⑧ on the bolt.

Caution: The negative wire of the early production model is fixed on the bolt around the starter motor.



h. Use an 8# sleeve to remove a bolt on the starter motor, and take out the negative wire⑧ on the bolt.

Caution: The negative wire of the early production model is fixed on the bolt around the starter motor.



i. Locate and unplug the plug of the cylinder head water temperature sensor⑩ on the right side of the throttle valve body.

Caution: The water temperature sensor of the cylinder head is directly connected to the engine, do not pull out the wrong way.

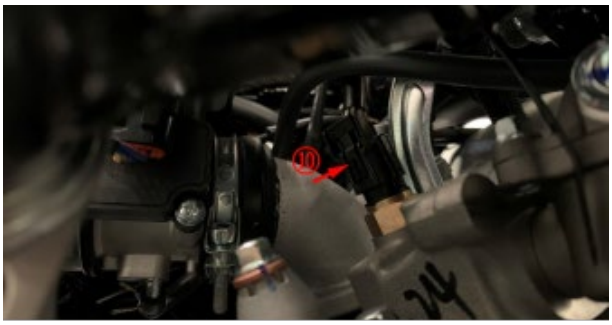

j. Locate and unplug the tube connecting the throttle body to the carbon canister at the lower part of the throttle body.

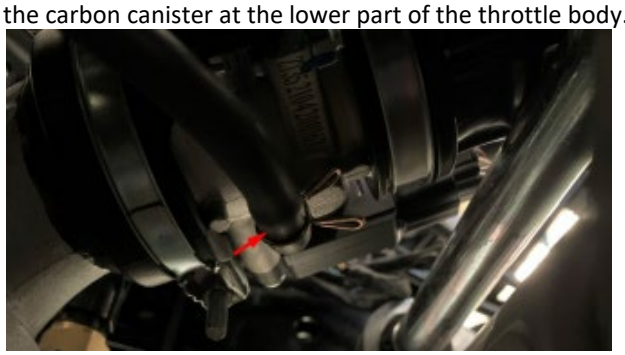

k. Locate and unplug the pipe connecting the oil and gas separator to the air filter on the left side of the throttle body.

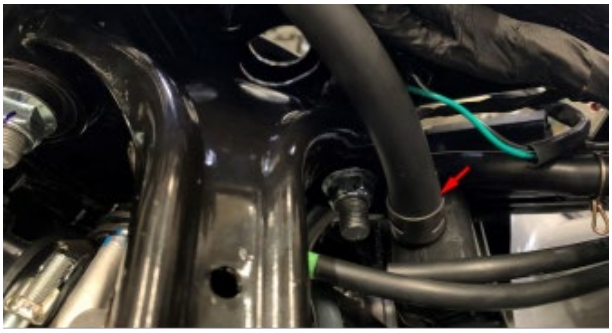

l. Use a 4# inner hexagon to remove one M6×16 bolt that fixes the wheel speed sensor on the rear rocker arm, take out the wheel speed sensor and take it out of the fixed clamp. Then use a 14# sleeve to remove the two M8×37 bolts that fix the brake caliper, and pass the brake caliper and wheel speed sensor in the direction of the arrow from the middle of the shock absorber.

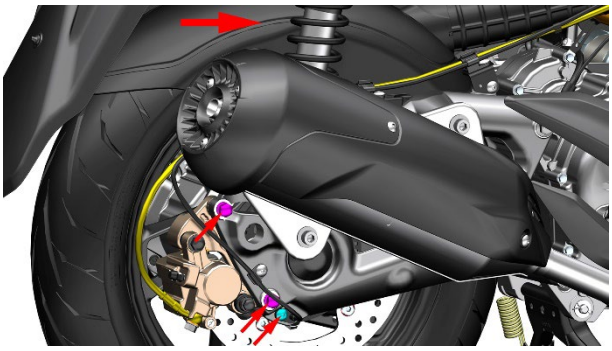

M155/150

A. Place a suitable vessel below the big arrow, wear waterproof gloves, and remove the M6 × 12 drain bolt and ϕ5.6 × ϕ1 O ring with 10 # sleeve.Discharge the cooling liquid;Use the water clamp pliers to remove the green hoop indicated by the small arrow, pull out the water pipe of the water tank, open the water filler cover, and discharge the coolant.

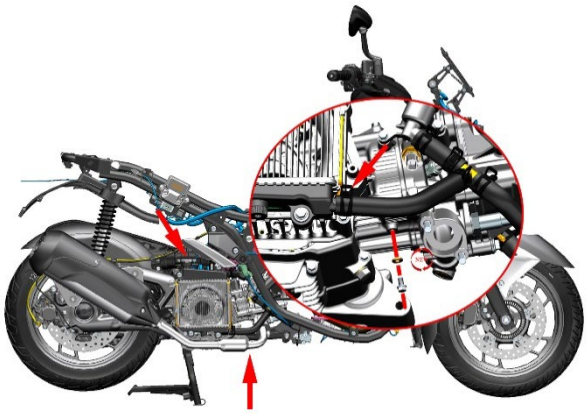

B. Pull out the plug of high voltage package on the engine head.

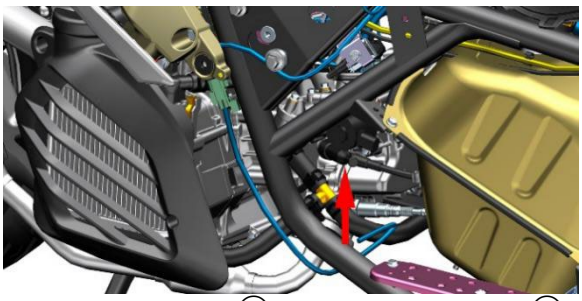

c.Unplug the sensor ① and the stepper motor ② on the throttle valve body according to the steps in Disma the throttle valve body assembly to remove the carbon deposit。

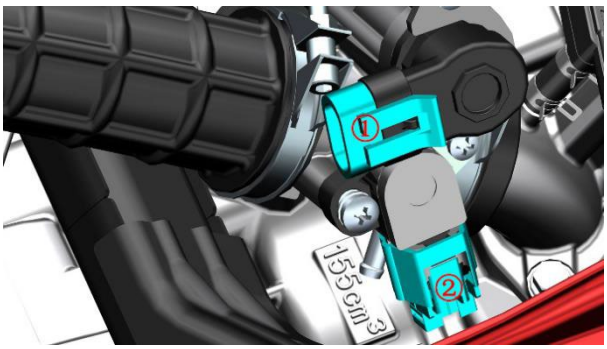

D. Find and unplug the plugs of high-pressure oil pipe ④ and fuel injector ③ at the front end of the throttle valve.

Note: a small amount of fuel will flow out when the high-pressure fuel pipe is pulled out, and it is forbidden to drop on the surface of the parts.



e.Locate and unplug the crankshaft position sensor plug ⑤, the magneto stator charging cable ⑥, and the water temperature sensor ⑦ in front of the tank on the right side of the frame.

Note: one end of the crankshaft position sensor is connected to the inside of the engine, and the other end is

connected to the main cable;One end of the magneto stator charging cable is connected to the inside of the engine, and the other end is connected to the connector on the rectifier; do not pull out the wrong plug.The cylinder head water temperature sensor is directly connected to the engine. Do not pull it out by mistake.

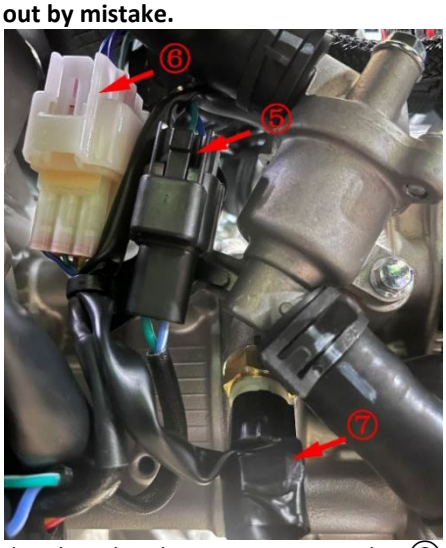

F. Find and unplug the oxygen sensor plug ⑧ at the throttle valve body.

Note: One end of the oxygen sensor is connected to the engine in front of the muffler, and the other end is connected to the main cable; do not pull out the wrong plug.



G. Locate and unplug the tube connecting the throttle valve body to the canister from the lower part of the throttle valve body.



H. Remove one M6 × 12 bolt (1) fixing the wheel speed sensor on the rear rocker arm with 4 # hexagon socket.Take out the wheel speed sensor and take it out of the fixing clamp. Then use 14 # sleeve to remove the two M8 × 37 bolts (2) fixing the brake caliper.Pass the brake caliper and wheel speed sensor through the middle of the shock absorber in the direction of the arrow.

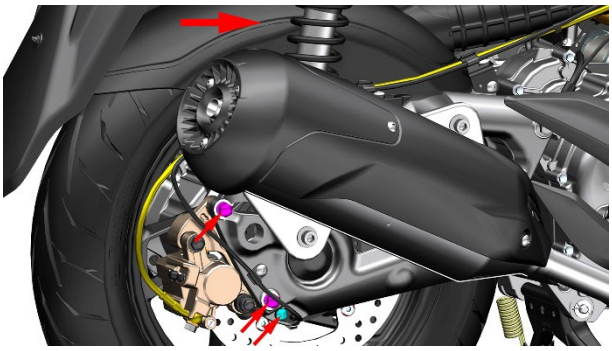

4. Disassemble the engine

a. Use a 12# sleeve to remove the two M8×25 bolts that fix the right pedal bracket, and remove the rear right pedal assembly.

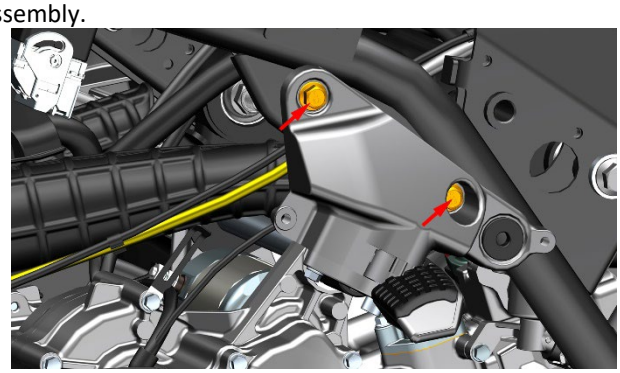

b. One person uses a 17# torx wrench to insert a M12 nut that fixes the engine on the left side of the vehicle from the front of the air filter, and another person uses a 15# sleeve to remove a M12×1.25×290 bolt that fixes the engine on the right side of the vehicle, pull out the bolt from the frame.

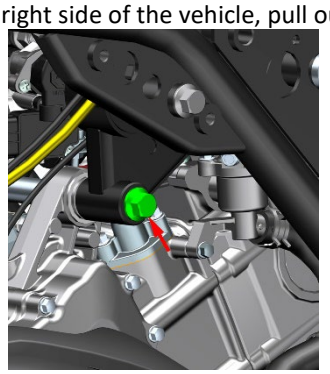

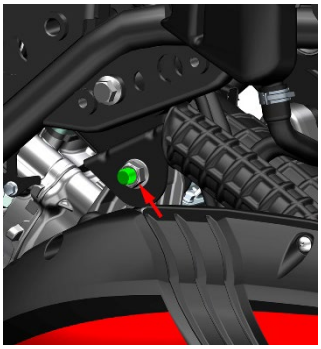

c. One person uses 14# torx wrench to extend from under the tail skirt and fix the 1 M10×1.5×55 bolt on the top of the left rear shock absorber, and one person uses 14# socket + ratchet wrench to remove and fix the left side from the frame. One M10 nut for rear shock absorption, and a bolt of M10×1.5×55 is drawn out. Use the same method to remove the 1 M10 nut that fixes the right rear shock absorber, one person holds the frame, and the other uses a rubber hammer + suitable tools to knock out one M10×1.5×55 bolt that fixes the right rear shock absorber.

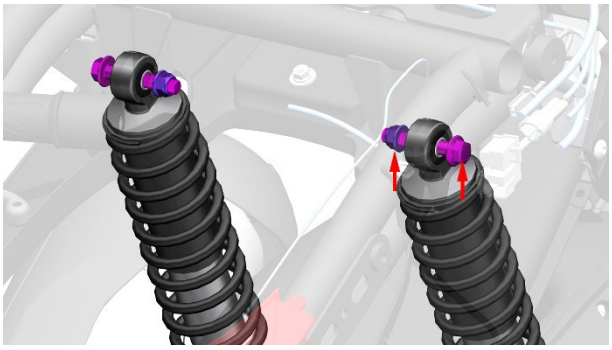

d. Two people hold the left and right handlebars and the frame respectively, push the whole car forward, push it to a flat and wide place, lay down the side brackets, and use a rubber stool with a suitable height to support the right side of the vehicle. Keep the vehicle balanced.



5. Install the engine

a. Two people cooperate to push the whole car to a suitable position, and first place the rear brake caliper on the whole car on the disc brake disc, being careful not to knock the shock absorber. Another person holds the vehicle, and one person adjusts the cradle mounting hole on the vehicle frame to align with the engine mounting hole. After aligning, use a suitable tool to penetrate a M12×1.5×290 bolt.

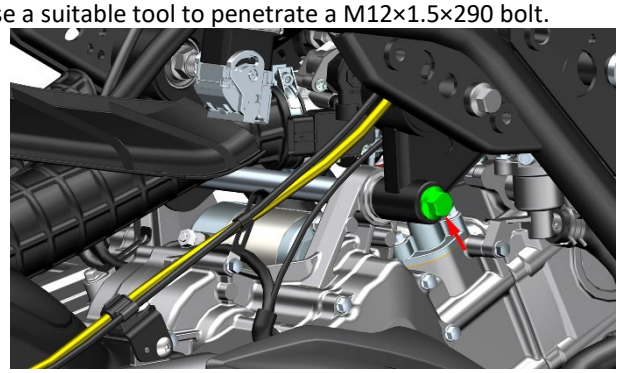

b. One person holds the whole car and slightly lifts the rear part of the frame, and one person rotates the two rear shock absorbers to the frame installation groove, and then rotates the right shock absorber until it is aligned with the frame installation hole. Pass one M10×1.5×55 bolt, use one M10 nut on the left side to tighten, torque: 30N.m (3.1 kgf.m, 22 lbf.ft). When installing the left side shock absorber, you need to slightly shake the frame from side to side until the shock absorber installation hole is aligned with the frame installation point, and then use the same method to fix the left side shock absorber.

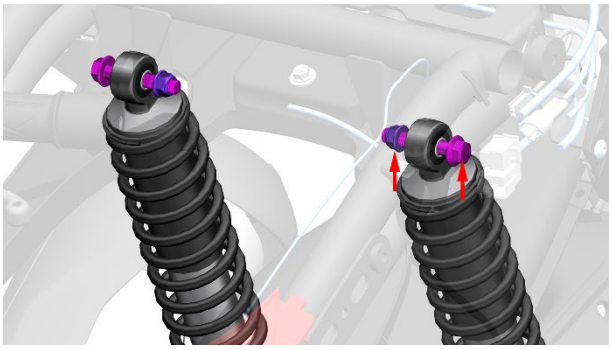

c. open the brake pads on the rear brake caliper with a flat-blade or other suitable tool, then install the brake caliper on the rear rocker arm, and then install 2 M8×37 bolts(6), use 14# set Tighten the barrel, torque: 24N.m (2.4 kgf.m, 18 lbf.ft); then connect the wheel speed sensor plug back to the corresponding position, install a M6×12 bolt(5), use 4# inner hexagon to tighten ; Finally, install all the pipes connecting the brake calipers and the wheel speed sensor into the corresponding clamps, and arrange the lines.

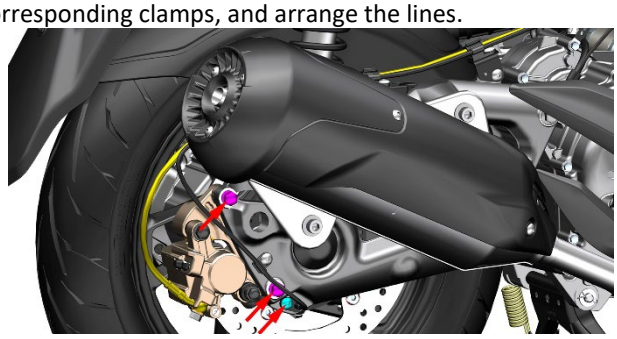

d. Insert the high-voltage package at the front of the engine back, and install one M12 nut back on the cradle to fix the engine, use 17# torx wrench to fix M12 nut, another person uses 15# socket to tighten bolt, torque: 65N.m (6.5 kgf.m, 48 lbf.ft).

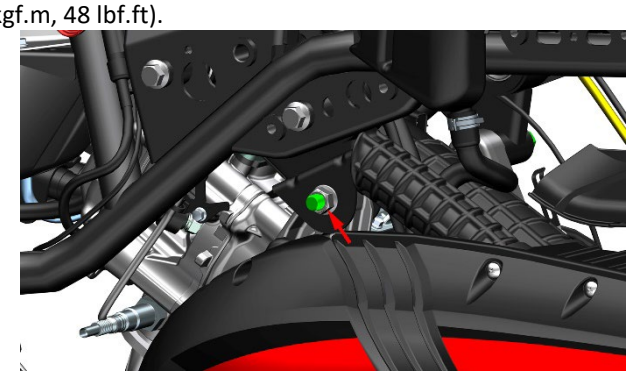

e. Install the rear pedal on the right side of the vehicle to a suitable position, install two M8×25 bolts, and tighten them with a 14# sleeve; connect the small water tank inlet pipe to the corresponding pipeline, and tighten it with a single batch Clamp; then connect the engine water inlet pipe back to the corresponding pipe, and use the water clamp clamp to fix the clamp to the appropriate position to prevent leakage of coolant.

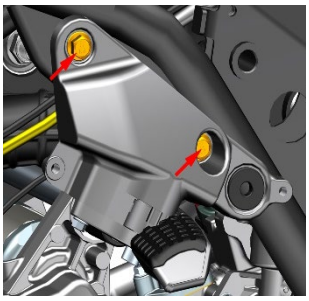
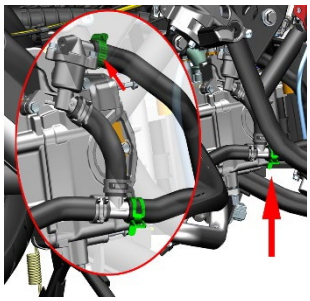

f. Reconnect the plugs of the stepper motor and the three-in-one sensor on the throttle valve body; reconnect the connectors of the high-pressure fuel pipe, fuel injector, oxygen sensor, crankshaft position sensor, magneto stator charging cable, and cylinder head water temperature sensor; Reconnect the negative and positive wires connected to the starter motor and tighten the bolts; install the two tubes that connect the carbon canister to the throttle valve body and the oil-air separator to the air filter.

g. Refer to "Adding Coolant to the Main Water Tank" to add an appropriate amount of coolant.

12. Disassembly and assembly of vehicle covering parts

Caution:

●The vehicle must be parked on a level and stable ground or on a lifting platform.

●The operation can only be performed after the engine and muffler has cooled down completely.

●Attention and sequence when removing the plastic buckle to avoid the buckle from breaking

●The M125/350/M125(2024)/155/368/150/250/338(ETC)　steps are similar to the M310, taking the M310 as an example.

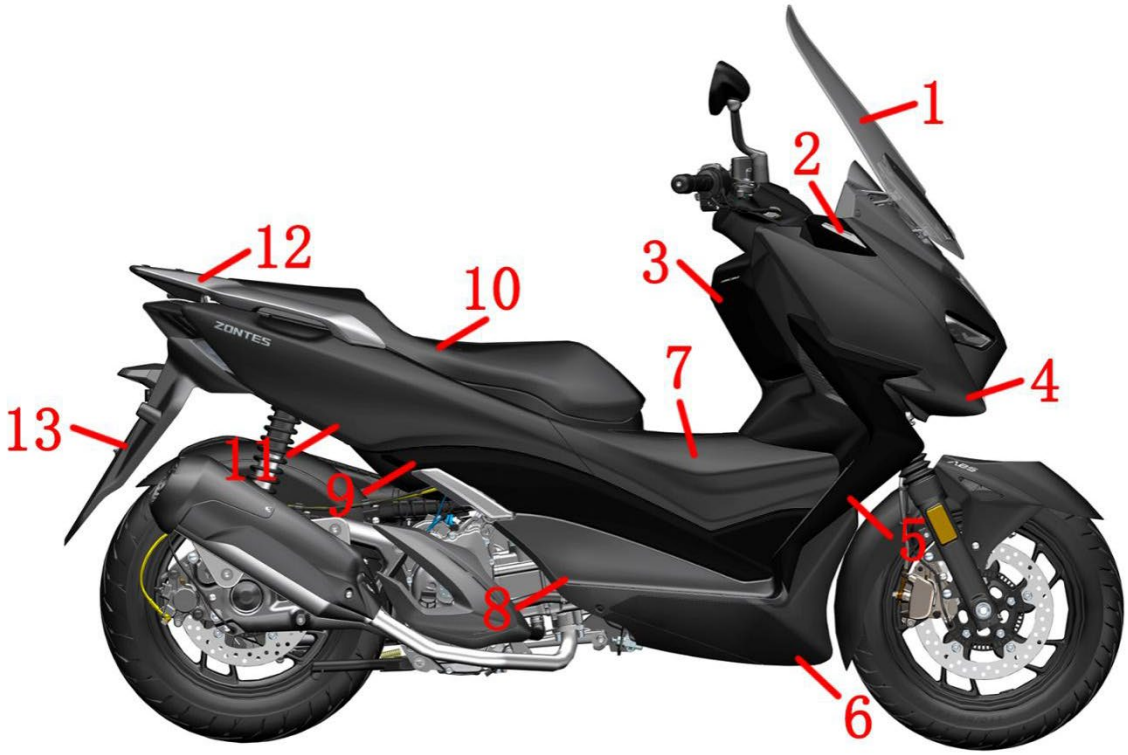

1. Windshield 2.Right front turn light 3. Right cover front storage box 4. Front right panel 5. Front storage box panel right decorative cover 6. Right pedal decorative cover 7.Right fuel tank cover plate 8. Right pedal 9. Right side cover 10. Cushion 11. Tail skirt right part 12. Rear rack 13. Rear mudguard



1. Windshield 2.Left front turn light 3. Left cover front storage box 4. Front left panel 5. Front storage box panel left decorative cover 6. Left pedal decorative cover 7.Left fuel tank cover plate 8. Left pedal 9. Left side cover 10. Cushion 11. Tail skirt left part 12. Rear rack 13. Rear mudguard

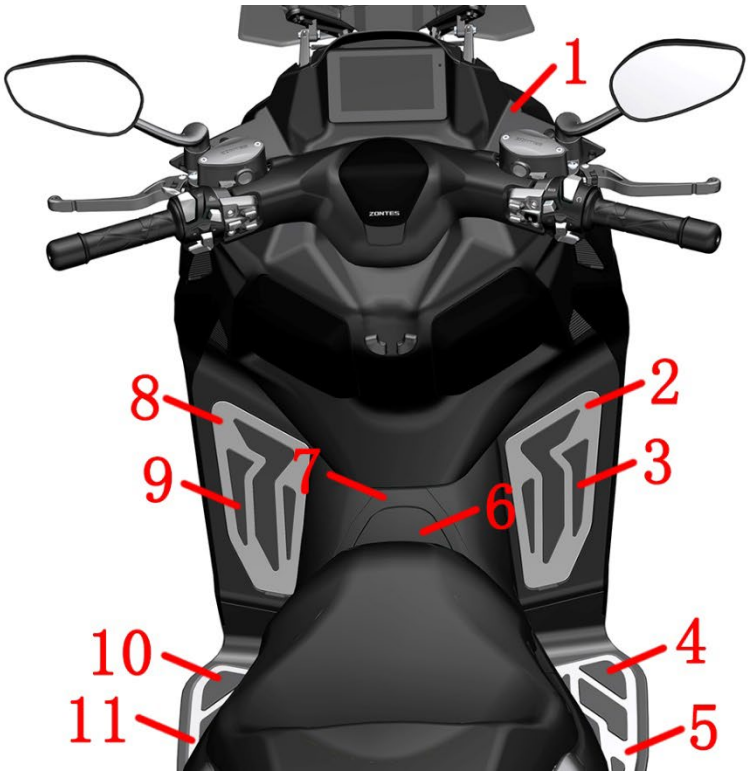

1. Instrument panel 2. Front right pedal pad pressure plate 3. Front right pedal pad 4. Rear right pedal pad 5. Rear right pedal pad presser 6. Fuel Tank Outer Cover 7. Fuel tank cover middle part 8. Front left pedal pad pressure plate 9. Front left pedal rubber pad 10. Rear left pedal rubber pad 11. Rear left pedal pad presser

Disassembly and assembly of vehicle panel

Caution:

●During disassembly, please pay attention to the force to prevent breaking the buckle.

●When removing the panels, please remove them in strict order. Do not forcibly remove the panels to prevent irreparable damage to the corresponding panels.

●When unplugging the plug, please control the force and disassembly method. Do not forcibly unplug the plug to prevent damage to the plug, resulting in poor contact of harness connector and affecting the function of various parts.

●When installing the harness plug, please check whether the harness thimble in the harness male connector is deformed or misaligned, so as to prevent the harness thimble in the harness male connector from being damaged during the installation of the harness plug, thereby affecting the function of each part.

M310/350/155/150/125/250 Windshield removal

a. Remove the 4 decorative buckles on the windshield.



b. Use 4# inner hexagon to loosen the 4 M6×16 bolts on the left and right decorative covers of the windshield.

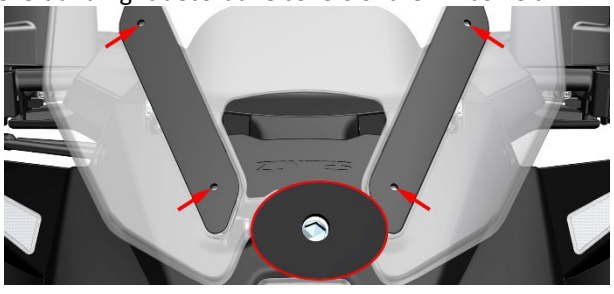

c. Take out the left and right decorative covers of the windshield, the windshield, and the rubber pads of the windshield bracket in turn.



M310/350/155/150/125/250 Removal of the front sun visor

a. Use 4# inner hexagon to remove the 2 swell nails on the front sun visor.

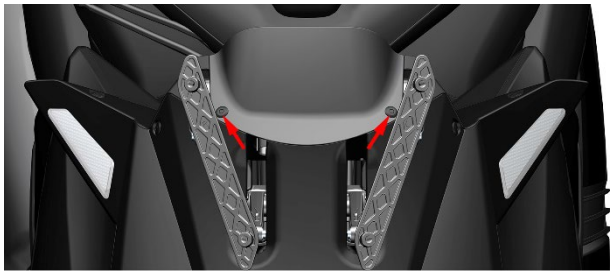

b. Hold the mark on the front sun visor (green rectangle) with your hand, pull it up in the direction of the arrow, and take out the front sun visor.

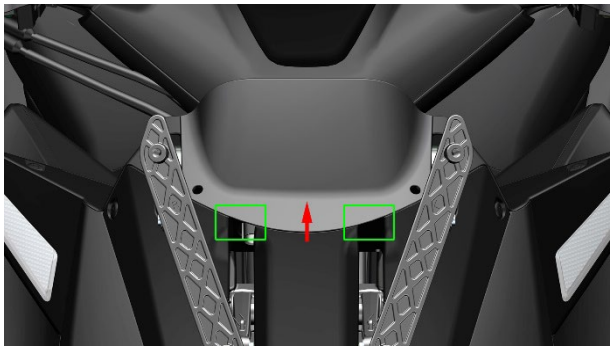

M310/350/155/150/125/250 Removal of the front cover

a. Use 4# inner hexagon to remove one M6×14 bolt on the front cover. Then use 4# inner hexagon to remove the 2 swell nails on both sides of the front cover.

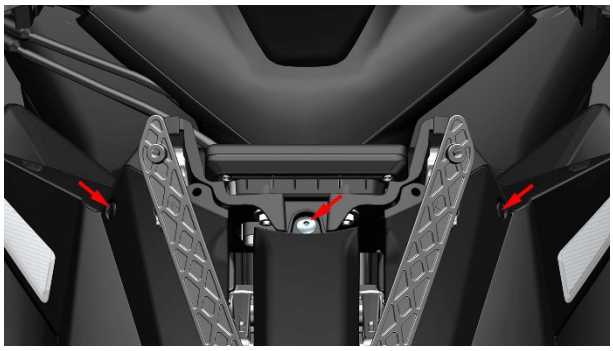

b. Raise the windshield rocker arm to the highest position, then grab the mark on the front cover (green rectangle) with your hand, and pull it up in the direction of the small arrow; pull out the two mushroom buttons (blue circles) on the front cover After exiting; continue to grasp the mark on the front cover (green rectangle) and pull it diagonally upward according to the big arrow until the 6 buckles on both sides of the front cover (yellow area, 3 on the left and right) are all pulled out.

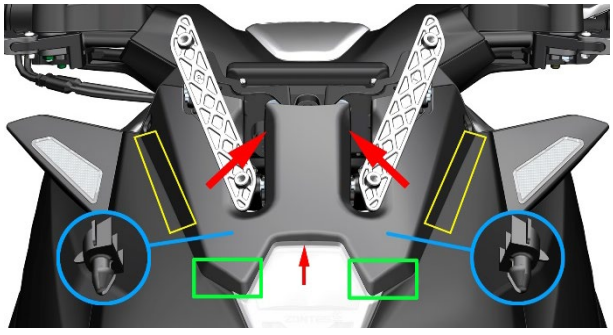

c. After pulling out all the buckles, grasp the mark on the front cover (green rectangle) with your hand, and pull it down in the direction of the arrow until the front cover is removed.

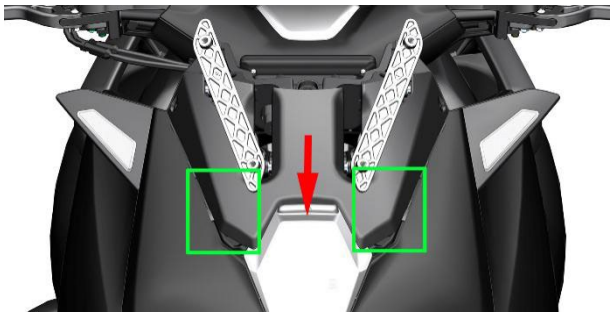

M368 Windshield removal

Pull the windshield in the direction of the arrow.



M368 front cover plate removal

Remove the front cover assembly after removing the 4 swell nails Note the two mushroom buttons at the lower arrow. Remove 3 pcs glues

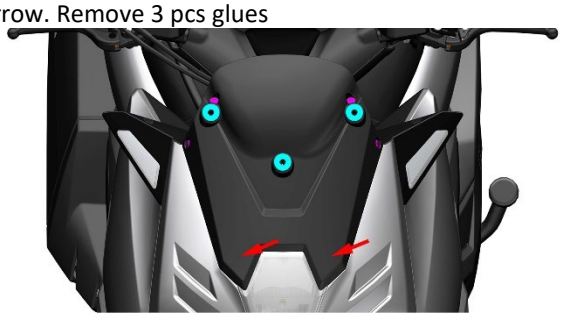

The following steps are the same as M310/125/350/150/155/368/338(ETC), demonstrated here with M310. 368 (ETC) can only use a T25 Torx wrench; other displacement models can use a 4# hex key or a T25 Torx wrench, but it is recommended to use a 4# hex key.

Removal of the front panel

a. Use 4# inner hexagon to remove the two M6×12 bolts on the front panel.

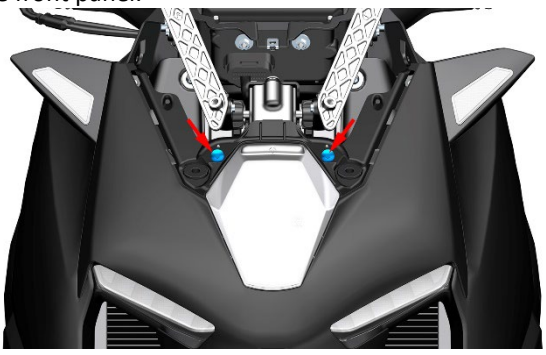

b. Grasp the mark on the front front cover (green box) with your hands, and pull out according to the arrow until the mushroom head (small arrow) on the right side of the front front cover is pulled out; use the same method to

remove it The mushroom head on the left side of the front front cover.

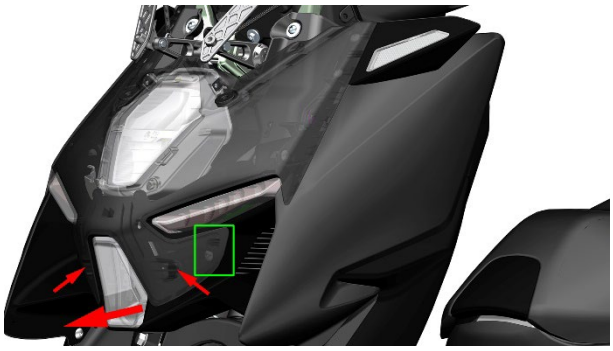

c. Grasp the mark on the front cover (green rectangle) with your hands, and pull it up in the direction of the arrow until the two positioning buckles (blue circles) of the front front cover and both sides of the front front cover are fixed. (Yellow area, 6 locations on the left and right), pull out the 12 buckles, and remove the front cover.

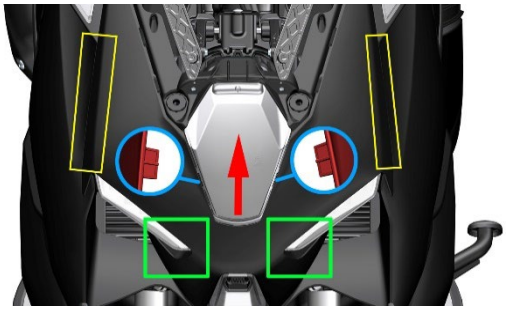

Disassembly of headlights

a. Use the 4# inner hexagon to remove the 4 M6×14 bolts around the headlight; use a cross to remove the 2 fixed headlight self-tapping Nail.

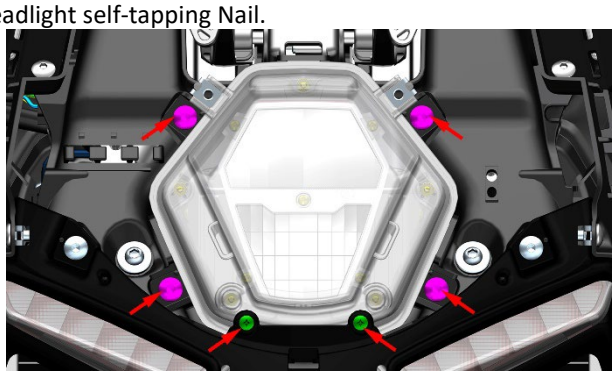

b. Hold the headlight with one hand and take it out for a certain distance, pull out the 3P plug (green and white wire) behind the headlight with the other hand, and take out the headlight completely.



Removal of front turn signal

a. Use 4# inner hexagon to remove the two M6×16 bolts on the front left turn signal.

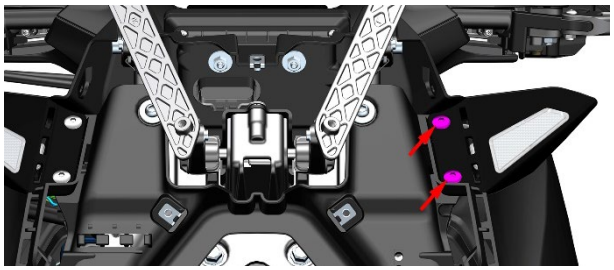

b. Use 4# inner hexagon to remove 1 swell nail on the top of the front left turn signal; use a cross screw to remove 1 self-tapping nail on the top rear of the front left turn signal.

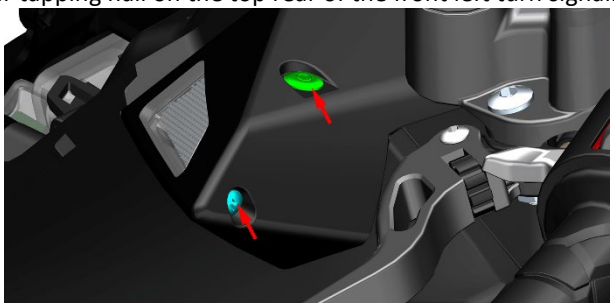

c. Take out the front left turn signal with one hand, and unplug the 2 bullet joints of the front left turn signal with the other hand.



d. Remove the front right turning light by the same methods.

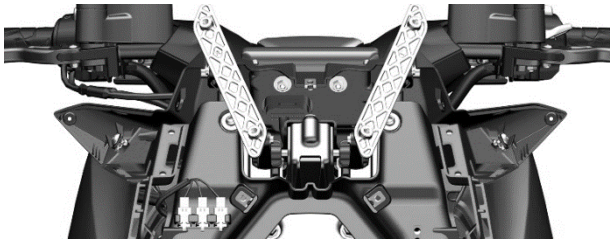

Disassembly of the of the Speedometer panel

a. Remove the two M6x12 bolts from the front turning light with a 4# socket.

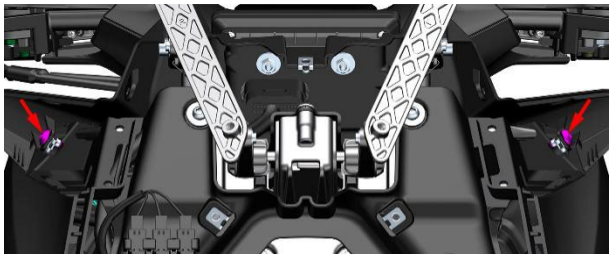

b. Grasp the marked place (green rectangle) on the Speedmeter panel with one hand and lift it up in the direction of the big arrow. With the other hand, press the front storage box panel at the junction of the front storage box panel and the Speedometer panel, Until the 8 buckles

(Yellow area, 4 places on the left and right) connecting front storage box panel and the Speedometer panel are separated

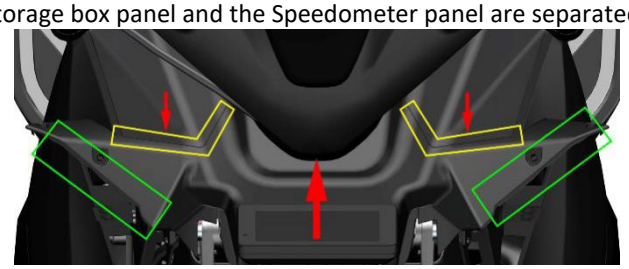

c. Grasp the Speedometer panel with one hand and lift it up slightly in the direction of the big arrow, and pull out the Speedometer plug () connected to the Speedometer with the other hand. **Caution:** When pulling out the plug, you must first press the lock buckle pointed by the arrow on the back of the plug with your fingers, and then pull it out. Plug, do not unplug the Speedometer plug directly; finally grasp the two sides of the Speedometer panel, lift it in the direction of the big arrow, and pull it out to take out the Speedometer panel.



Removal of the front left and right panels

a. Use 4# inner hexagon to remove two M6×12 bolts and a swell nail on the front left panel, and then pull out the decorative glue of the front left panel by hand.

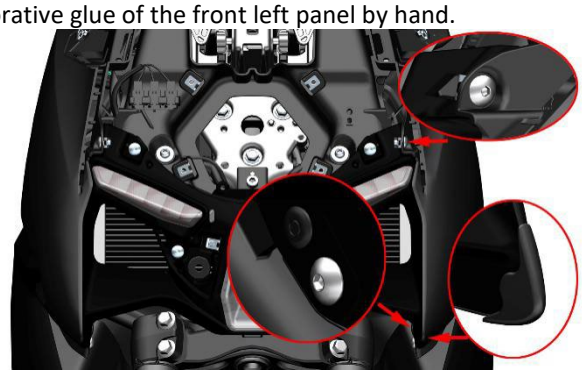

b. Grasp the mark on the front left panel (green rectangle) with both hands, and carefully pull out in the direction of the big arrow. When pulling out, you need to follow the order of the small arrow pointing to separate 11 buckles (Yellow area; 4 front vents, 1 decorative cover on the left panel of the front storage box + 1 mushroom button, 6 front storage box panels), and 1 mushroom buckle (Blue area) on the connection of the front left panel and the front vent, the front storage box left panel decorative cover, the front storage box front panel, remove the front left panel.

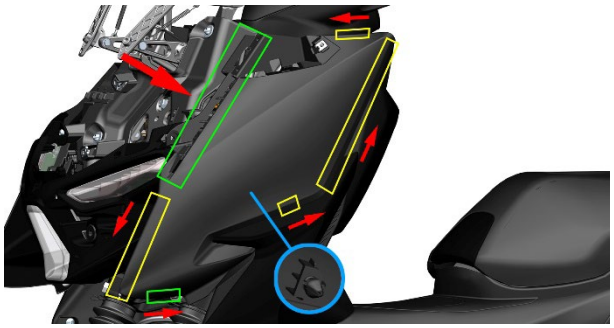

c. Use the same method to remove the front right panel.



Removal of the front part of vent

Use 4# inner hexagon to remove the 2 swell nails on the inside of the front part of vent. Then unplug the 3 connectors on the upper left side of the front vent.

Caution: When unplugging the connector, you need to press down the lower tip of the connector before pulling it out, otherwise the connector buckle will be damaged.

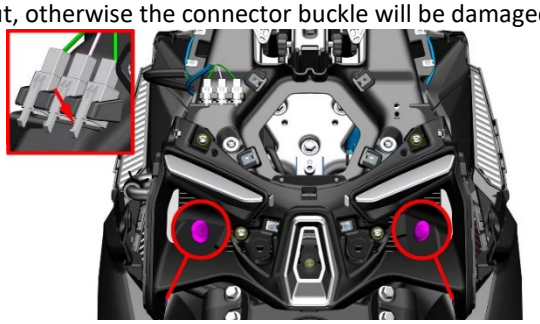

Use 5# inner hexagon to remove 4 M6×14 bolts on the front vent. Remove the front vents and the position lights installed on the vents and other parts.

Caution: When removing the last bolt, you must hold the front vent with your hand to prevent the front vent from falling directly and scratching the paint.



M310/350/155/125/250 Removal of the windshield base

a. Use a 4# inner hexagon to remove the M6×16 bolts that fix the bracket. Locate the two plugs of the windshield controller and unplug them.

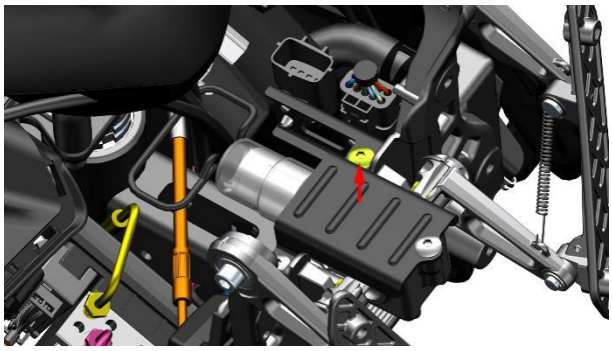

b. Use an 8# sleeve to remove the M6×30 bolts on the left side of the auxiliary water tank and the M6×30 bolts on the right side to remove the main water tank from the base. Remove the auxiliary tank drain hose from the windshield base. Remove the horn bracket using a 6# Allen. Use an 8# sleeve to remove the water filler bracket and remove 2 M6×16 bolts.

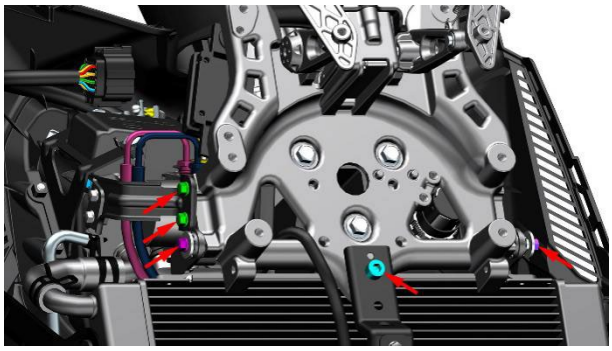

c. After holding the windshield base assembly firmly, use a 12# sleeve to remove 3 M8×25 bolts, and then remove the windshield base assembly from the vehicle.

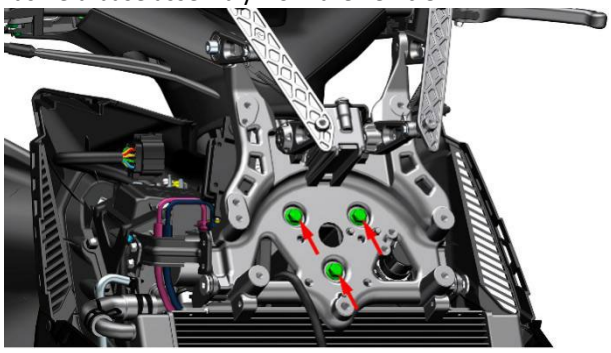

d. Use a 4# socket head to remove 2 M6×16 bolts and take off the flanged bushing. Remove the windshield control.

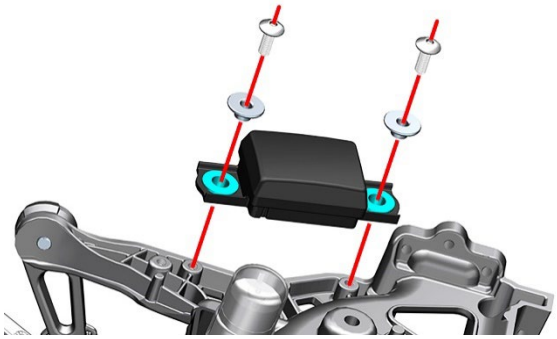

e. Use needle-nose pliers to remove the two retaining springs, grab the left windshield bracket and remove the pin and buffer glue, and remove the rocker spring. Remove the right windshield and rocker spring in the same way. Each pin has 2 pcs buffer glue.

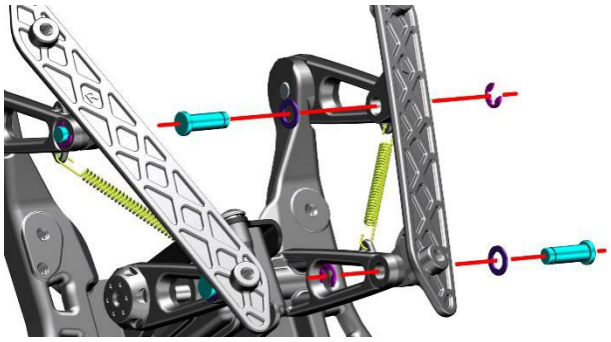

f. Use a 4# hexagon socket to remove 2 M6×16 bolts and remove the spring washer. Separate the windshield motor pressure plate, windshield motor assembly and windshield base assembly.

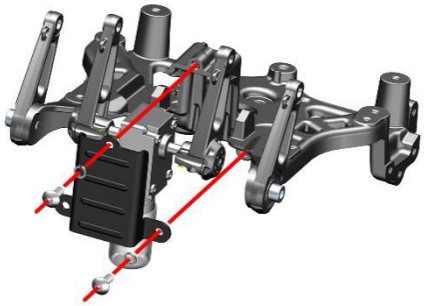

g. Use a Phillips screwdriver to remove 2 M4×16 bolts to separate the rocker arm pressure block from the lower right rocker arm. Remove the 2 pieces of rocker arm bumper glue from the rocker arm clamp. Remove the left lower rocker arm in the same way. If you buy a windshield motor, you need to buy a "1240300-007000 HJ125-6 Battery rubber gasket", pasted on the side of the windshield motor pressure plate.

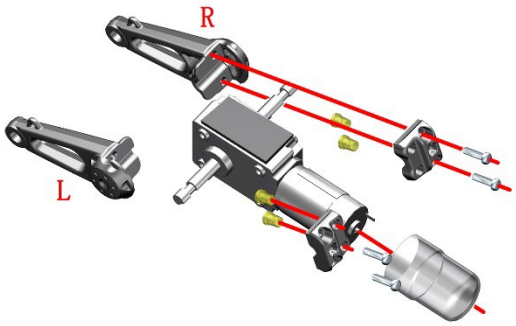

h. Remove the M8×16 bolts with 6# inner hexagon, and remove the gasket, bearing and upper rocker arm.

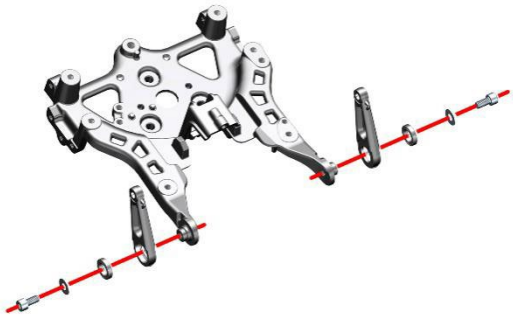

M368/150 Removal of the windshield base

For M368, use a 4# hexagon socket wrench to remove the 2 bracket bolts securing the hydraulic control unit on the right side of the vehicle head; for M368 (ETC), use a T25 Torx wrench; use a 6# hexagon socket wrench to remove the horn

bracket.

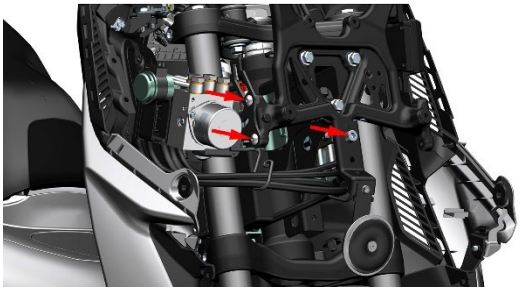

For M368 with a retractable windshield installed, follow this step; otherwise, skip it. Unplug the windshield controller plug. Remove the 2 bolts securing the windshield controller with a 4# hex key, and remove the flanged bushing. Remove the windshield controller assembly from the base. If necessary, remove the buffer rubber from the controller assembly.

Use the 12# sleeve to remove the 3 bolts that fix the windshield base and remove the base from the vehicle.

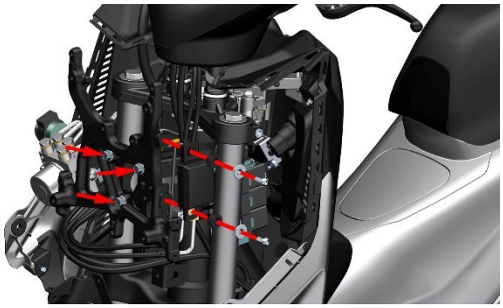

The following steps are the same as M310/125/350/150/155/368/250/368(ETC), demonstrated here with M310. 368 (ETC) can only use a T25 Torx wrench; other displacement models can use a 4# hex key or a T25 Torx wrench, but it is recommended to use a 4# hex key.

Removal of the left and right decorative covers of the front storage box

a. Use 4# inner hexagon to remove one M6×14 bolt connecting the left decorative cover of the front storage box panel and the surrounding middle part; use 5# inner hexagon to remove 1 non-standard M6×14 bolt on the left decoration cover of front storage box panel; use 4# inner hexagon to remove 1 swell nail on the left decoration cover of the front storage box panel.

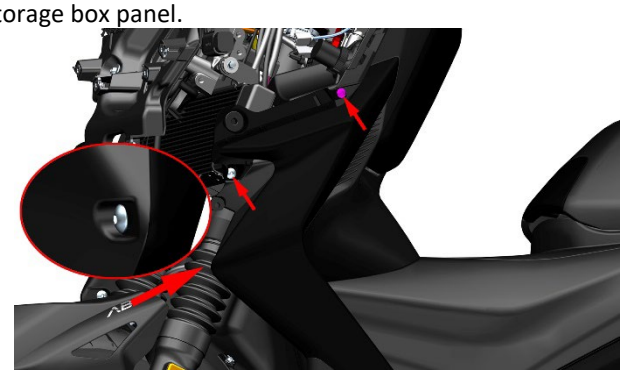

b. M310/125/155/350 pry out the front left pedal rubber pad and the front left pedal aluminum pad from the position pointed by the small arrow using a single-character batch, and then pull out the front left pedal rubber pad and the front left pedal aluminum pad upwards in the direction of the big arrow. **Caution:** When using the one-word pry, you can use non-woven cloth and other tools to wrap the one-word batch to prevent scratching the paint surface.

M368/150 Egypt/38(ETC) take off the pedal rubber pad.



c. For other models, use a 4# hexagon socket, and for M368 (ETC), use a T25 Torx wrench to remove the two M6×12 bolts on the front storage box panel that connect the left decorative cover of the front storage box panel.



d. Use one hand to grasp the left decorative cover mark (green rectangle) of the front storage box panel and pull out, and use one hand to hold the mark (green rectangle) of the front storage box panel and press down Until the top of the left decorative cover of the front storage box panel and the front storage box panel are connected (yellow area), the 3 buckles are separated,and then the left decorative cover of the front storage box panel is surrounded by the front storage box panel in the order of the small arrows. The connection of the middle and left pedal decoration cover (yellow area: 7 buckles on the front storage box panel, 3 buckles on the left pedal decoration cover; blue area: surrounds the 4 points where the middle part is connected to the front storage box panel The 10 buckles of the bayonet) and the 4 bayonets are separated, and then remove the left decorative cover of the front storage box panel, remove the left decorative cover of the front storage box panel.

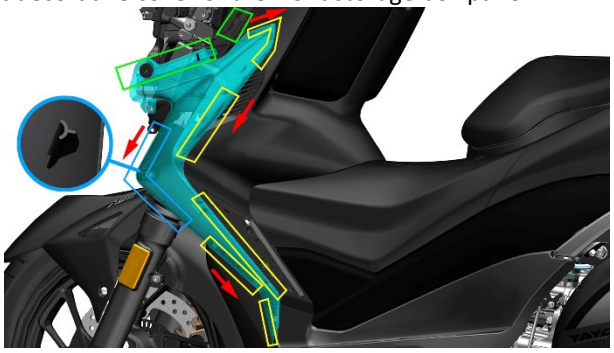

Use the same method to remove the right decorative cover of the front storage box panel.

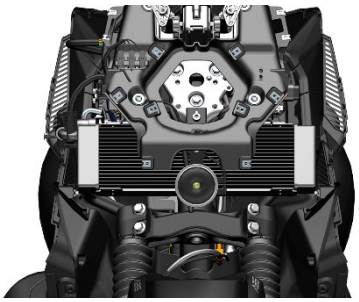

Disassembly of the left &right side cover

a. Put down the left rear pedal and use the 4# inner hexagon to remove the M6×14 bolt. Pull out in sequence in the direction of the arrow (from the rear wheel to the front wheel). Note that there are 5 staples at the red circle and a circle of buckles around. It takes a lot of force to pull out.

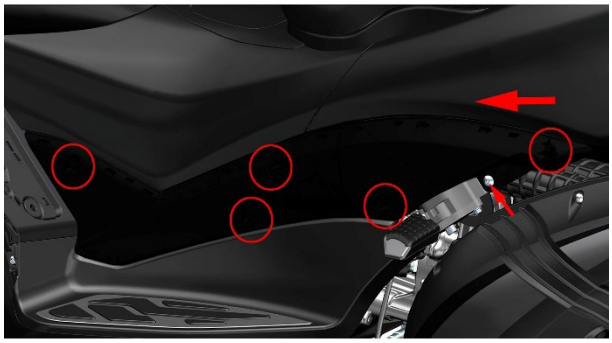

b. Remove the right side cover by the same method.

Disassembly of the foot pedals and trim cover

a. M310/125/155/350 protrude the rear pedal rubber pad and rear pedal rubber pad pressure plate from the position indicated by the small arrow with the Slot-type Screwdrivers. Pull the rear pedal rubber pad and rear pedal rubber pad pressure plate upward in the direction of the big arrow until the rear pedal rubber pad and rear pedal rubber pad pressure plate are removed. **Caution:** Use a tool such as non-woven cloth to wrap the Slot-type Screwdrivers when using it to prevent scratches on the paint surface.
M368/150 take off the pedal rubber pad.

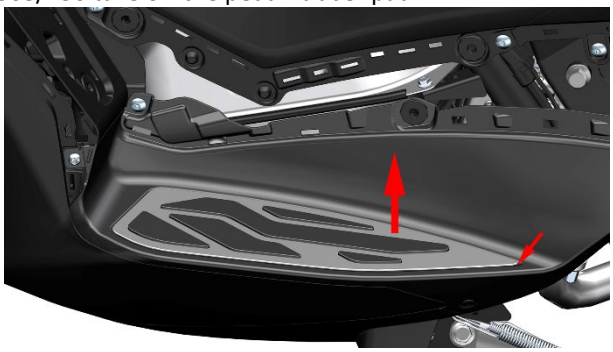

b. Remove 7 pcs M6x14 bolts on the left pedal with 4# inner hexagon. Remove a M6x16 bolt with 5# inner hexagon and then take off the bushing on the front part.



c. Remove the two M6x14 bolts of the in side of left pedal decorative cover front part with 4# inner hexagon.

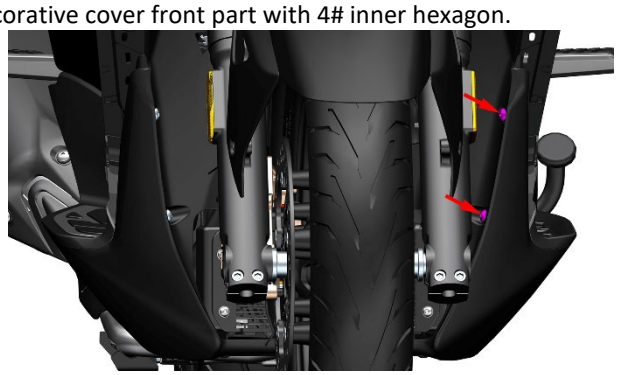

d. Remove an M6x14 bolt from the bottom plate and the decorative cover of the left pedal with a 4# inner hexagon; then remove the 1 swell nail of the left pedal decorative cover and 1 swell nails of the bottom plate

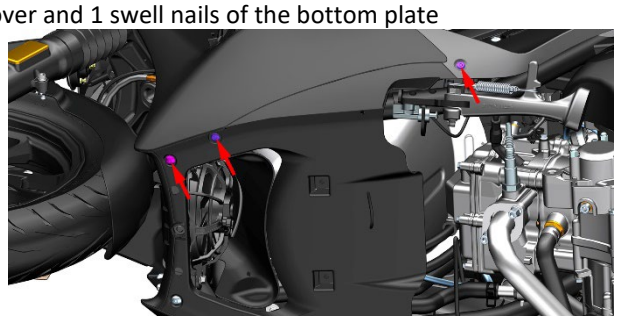

e. Hold the left pedal decorative cover and the left pedal with two hands and take out the left pedal decorative cover and the left pedal in the direction of the arrow.



f. Remove the right pedal trim cover and the right pedal in the same way.

Removal of the surrounding middle part

Use 4# inner hexagon to remove the two M6×12 bolts connecting surround middle part and the front storage box panel and then remove the middle surround.

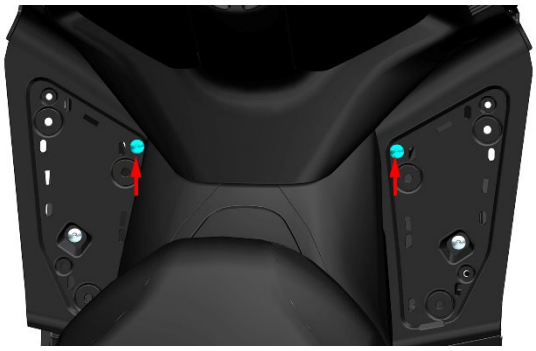

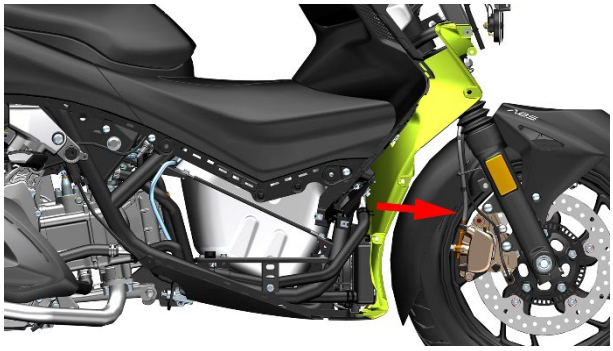

Disassembly of the surrounding bottom

Grasp the rear part of the around the bottom plate by hand, and pull it back in the direction of arrow until the bottom plate is taken out.

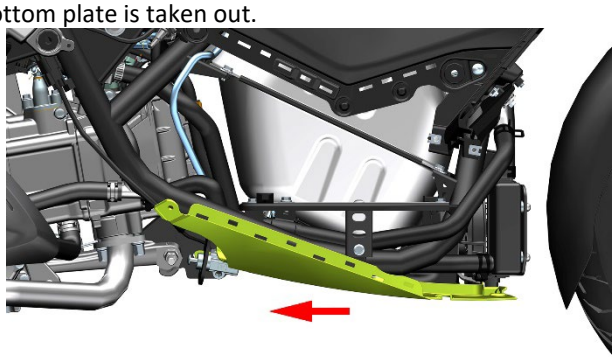

Removal of the cooling fan air guide plate

a. Use an 8# sleeve to remove the M6×22 bolts on the left and the M6×30 bolts on the right, and push the water tank assembly forward.

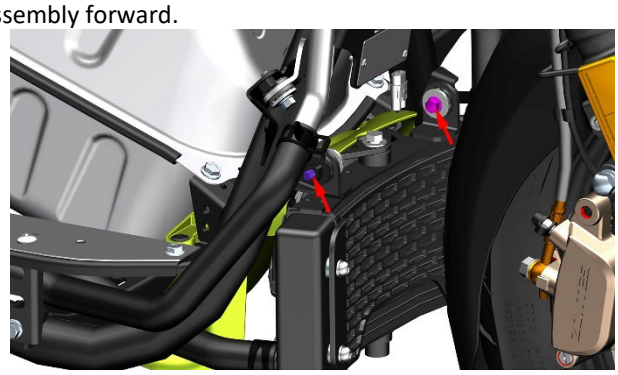

b. After removing the expansion nails on both sides, pull back the protruding installation part of the air deflector and then remove it. If it is inconvenient to operate, use a 10# sleeve to remove the 4 M6×12 bolts that fix the fuel tank, and then remove the air deflector.

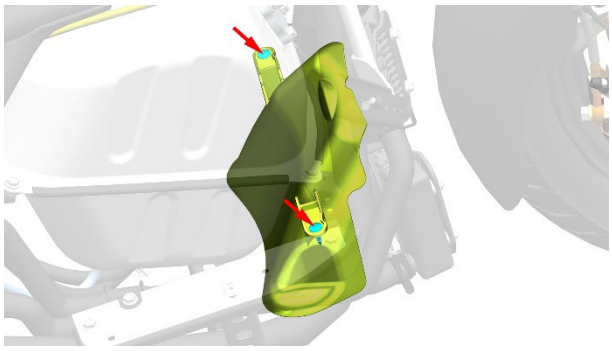

Disassembly of the cushion

a. First press the “ ”power button of the vehicle, then press the seat lock switch of the vehicle to open the seat lock, and then long press the power button for 2 seconds to shut down the vehicle



b. Hold the seat cushion with one hand, remove the 3 M6 nuts fixed on the seat cushion bracket by 10# double offset ring spanner or 10# sleeve , grasp the seat cushion with both hands and pull it out obliquely upward according to the angle of the stud (big arrow direction) cushion. **Caution:** When the angle is incorrect and the cushion cannot be pulled out, do not use brute force to forcibly pull out the cushion to prevent damage to the threads on the cushion installation studs.

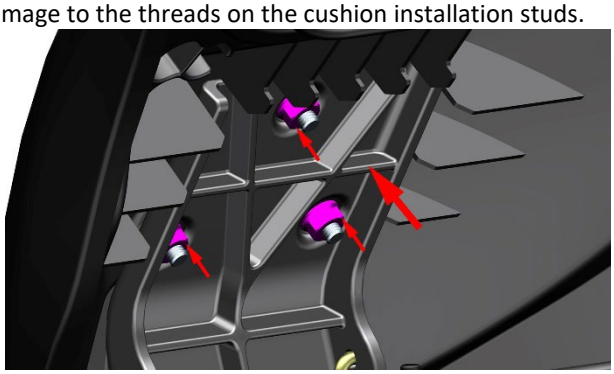

c. Flip the seat to the back, pay attention that the seat cushion should not be placed directly on the ground or a hard surface to prevent scratching the cover or edge of the seat cushion. Hold the decorative cover of the seat cushion with one hand, then remove the 2 ST4.2×12 self-tapping screws on the head with a 5# hexagon socket, or remove 2 pcs ST3.9×12 self-tapping with a Philips screwdriver, and remove the decorative cover of the seat cushion. If you need to remove the cushion cushion glue, you can directly remove it by hand.



Disassembly of the storage box

Refer to the steps of "Removing the Stepper Motor and Cleaning the Carbon Deposit".

Disassembly of the rear hand rest

Remove the 7 bolt decorative fasteners on the bolts. For M310/350/150/368, use a 4# hex key; for M368 (ETC), use a T25 Torx wrench to remove 2 M6×12 bolts; use a 12# socket to remove 5 M8×25 bolts; use a 4# hex key or T25 Torx wrench to remove 2 expansion nails on the rear armrest; grasp both sides of the rear armrest with both hands, lift the rear armrest upward in the direction of the arrow, and then remove the rear armrest.

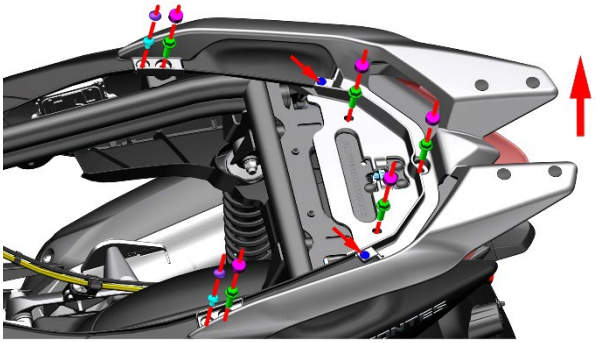

b. Flip the rear armrest to the back. For M310/350/150/368, use a #4 hex key; for M368 (ETC), use a T25 Torx wrench to remove the two M6×12 bolts on the left side, then remove the left buffer rubber of the rear armrest (as shown in the illustration L). Remove the right buffer rubber (as shown in the illustration R) using the same method. For M310/350/150/368, use a #4 hex key; for M368 (ETC), use a T25 Torx wrench to remove the five M6×12 bolts at the rear, then remove the flanged bushing and flanged bushing buffer rubber, and finally remove the base plate.

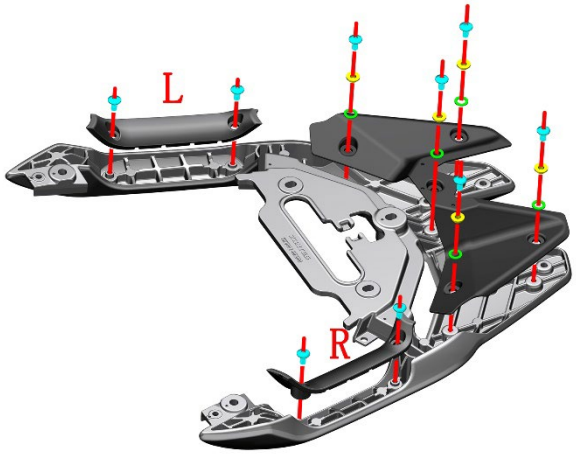

Disassembly of the left and right tail cover

a. Remove the 4 swell nails from the apron by 4# socket.

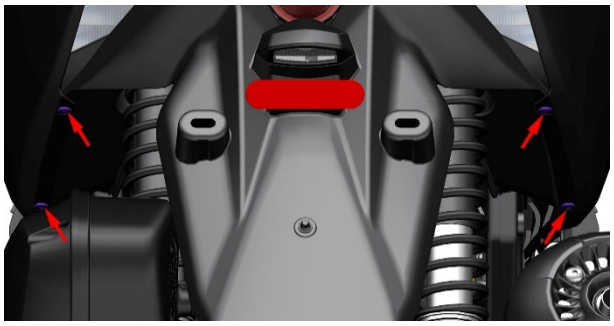

b. For other model, use a 4# hexagon socket wrench, and for M368 (ETC), use a T25 Torx wrench to remove the 4 M6×14 shoulder bolts on both sides that secure the front of the tail skirt.

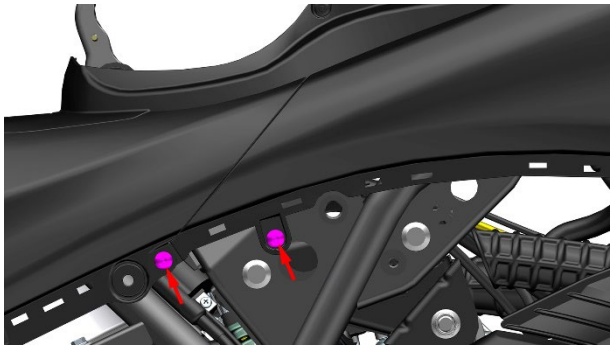

c. Grasp the mark of the fuel tank middle cover by hands and press it down (green rectangle 1; here is the color of the parts for easy identification, the middle of the fuel tank cover is black, and the right part of the fuel tank cover is gray. The tail skirt is red) With the other hand, grab the tail skirt mark (green rectangle 2) and pull it up until the two buckles at the junction of the tail skirt and the middle part of the fuel tank cover (yellow area) are separated;Hold the mark on the tail skirt (green rectangle 4) with one hand, and then hold the mark on the right part of the fuel tank cover (green rectangle 3) with one hand and pull it out until the 2 buckle positions and 2 clip pins at the junction between the tail skirt and the right part of the fuel tank cover (yellow area) are separated;Finally, grab the end skirt marks (green rectangles 5, 6) and pull in the direction of the arrow. Remove the right skirt cover.

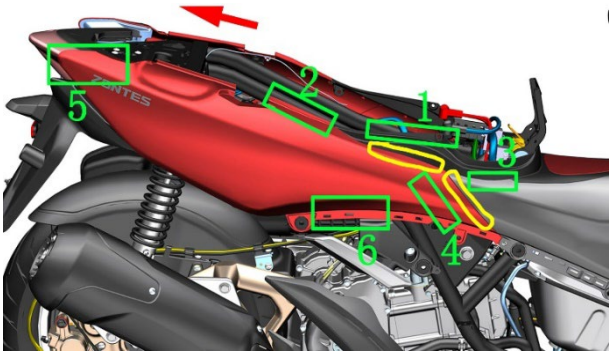

d. Use the same method to remove the left side of the tail-cover board.



Disassembly of tail light

a. For other models , use a #4 hexagon socket wrench, and for M368 (ETC), use a T25 Torx wrench to remove the two M6×14 shoulder bolts on the left part of the tail skirt bottom plate; use a #5 hexagon socket wrench to remove the one ST4.2×12 self-tapping screw on the left part of the tail skirt bottom plate; grasp any position on the left part of the tail skirt bottom plate and pull it in the direction of the large arrow to remove the left part of the tail skirt bottom plate.

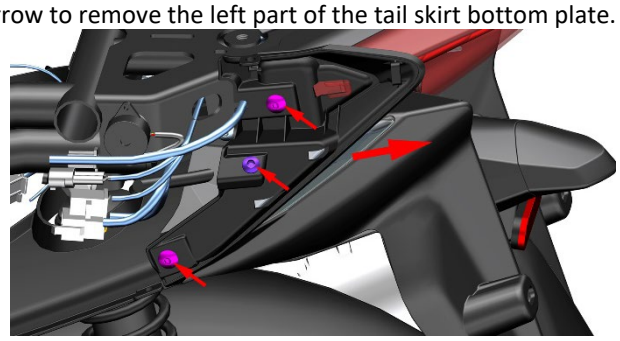

b. Use the same method to remove the right side of the tail-cover board.



c. Use 4# inner hexagon to remove the 2 swell nails which connected to the rear clay board with the taillight

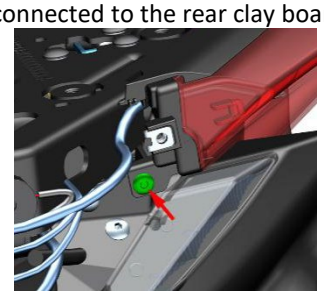

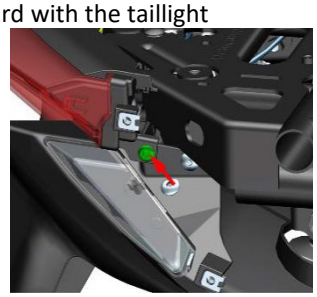

d. Find out and unplug the taillight plug (3P) from the plastic cover on the left side of the frame, hold both ends of the taillight and pull it out diagonally in the direction of the arrow to remove the taillight.

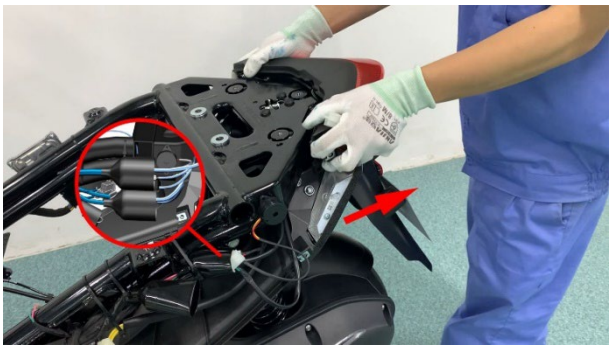

e. 4 Hold the taillight cover with one finger, and push the cover latch with your thumb in the direction of the arrow. Push the buckle on the other side away in the same way. After pushing the buckles on both sides open, hold the tail light with one hand, and push the middle of the grip cover upwards with the other hand. Separate the cover and taillights. Note that there is a friction button in the middle, so it takes a lot of force to break it apart.

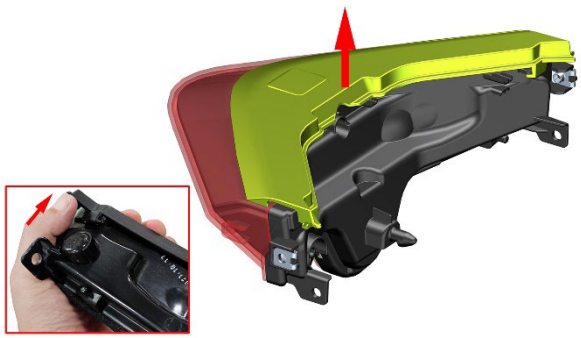



Disassembly of rear fender

a. For other models use a 4# hexagon socket, and for M368 (ETC), use a T25 Torx wrench to remove the 4 M6×14 shoulder bolts connecting the rear inner fender to the frame..

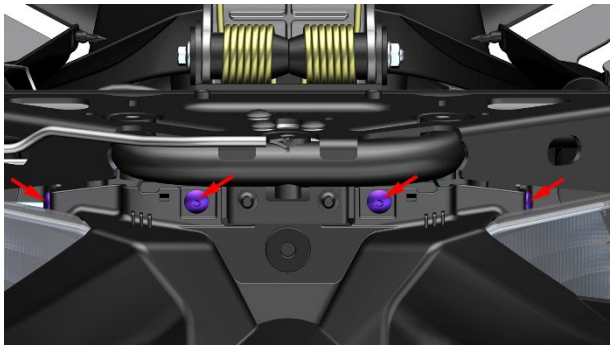

b. Find out and unplug the joint of rear license plate light, left and right turn signal and rectifier from the rubber cover on the left side of the frame.



c. One person uses 14# sleeve(368 ETC model uses 13# socket) to fix the non-standard M10×1.5×55 bolt from upper of the rear shock absorption, one person uses 14# sleeve(368 ETC model uses 13# socket) + ratchet wrench or box wrench to remove the non-standard M10×1.5 nut, from the upper part of the rear shock absorption of the frame inside; nut torque: 30N.m（3.1 kgf.m, 22 lbf.ft）.Remove nuts on the other side using the same method.Two bolts can not be removed.

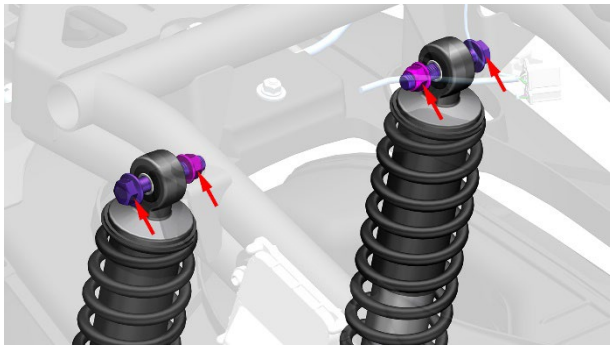

d. Follow this step for vehicles produced before May 25, 2022, and then skip to step f. Use the ratchet wrench + 8# sleeve to extend under the rectifier and remove the 2 outer hexagon M6x16 bolts of the rectifier.

Caution: the rectifier should not be taken out. Let it hang in the air.

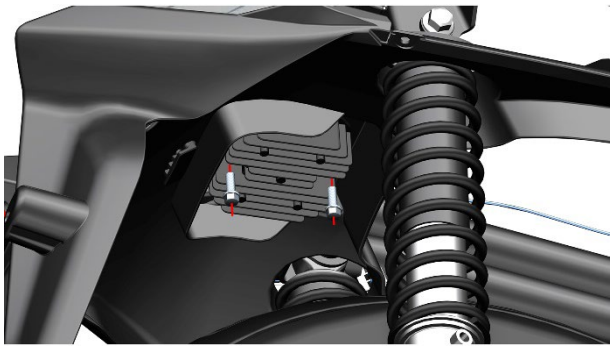

e. After sorting out the wiring harness of the rectifier, hold the rear inner clay plate and pull it down according to the arrow indication until the gap between the frame and the rear inner clay plate is enough to pass the 2 connectors of the rectifier through the holes reserved on the rear inner clay plate in turn. (**Caution:** The holes on the rear inner mud board have not enough place to take out the two rectifier connectors at the same time, so take out the rectifier connectors one by one.) Take out the rectifier.

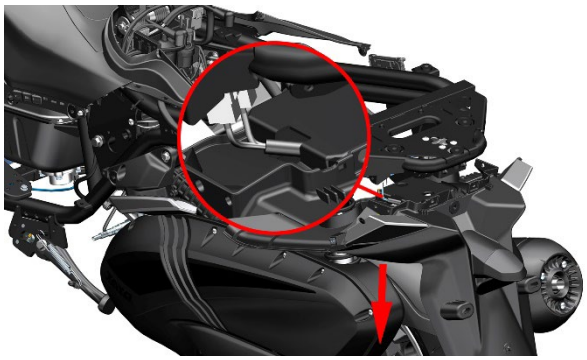

f M155 Follow this step, M310/350 skip.

After sorting out the harness, grasp the start-stop controller and unplug the three plugs on the controller.(Note: Do not disassemble by force to avoid damaging the controller.) Take out the start-stop controller.



M155: After firmly removing the start-stop controller, remove two M6 × 16 bolts and two bushings at the bottom with 10 # sleeve, and then remove the start-stop controller assembly.Remove 3 M6 × 16 bolts with 10 # sleeve to separate the start-stop controller from the bracket.



i. For model 368 (ETC), use a T25 Torx wrench to turn it over to the back; for other models, use a 4# hex key to remove the 2 M6 shoulder bolts. After removing the 2 expansion nails, separate the front and rear parts of the rear fender. If necessary, simply remove the blue rubber plug by hand.

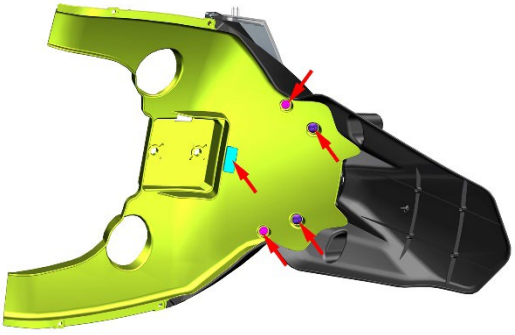

j. For model 368 (ETC), use a T25 Torx wrench to turn it over to the back; for other models, use a 4# hexagon socket and remove the 2 M6×14 shoulder bolts on both sides.



k. Flip to the back and remove the upper ST4.2×12 self-tapping screws with a 5# inner hexagon, and then remove the rear right turn signal (R) and rear left turn signal (L). After holding the rear license plate light ①, use a 10# sleeve to remove the self-contained nut, and then remove the ϕ6 washer. After holding the rear reflector ② firmly, use a 10# sleeve to remove the nut and washer that comes with it.

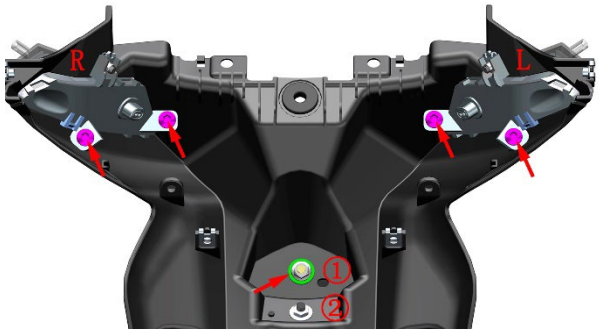

l. If you need to replace the rear fender, you need to remove 4 pieces of plywood nuts, 1 piece of side cover rubber and 1 piece of rear license plate buffer glue. Note that the rear license plate buffer is pulled out to the side where the rear license plate is installed.

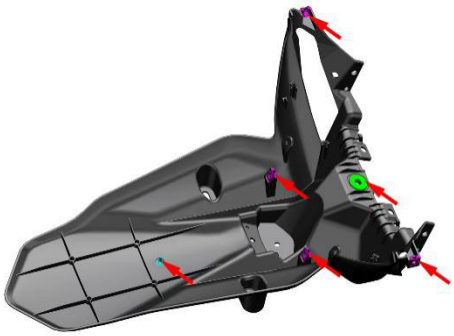

Disassembly of the left, right fuel tank cover

a. For model 368 (ETC), use a T25 Torx wrench to turn it over to the back; for other models, use 4# inner hexagon to remove a non-standard M6x14 bolt on the right part of the fuel tank cover. Grasp the mark on the right part of the fuel tank cover (green rectangle) and pull it upward in the direction of the arrow Until the right part of the tank cover plate and the middle part of the tank cover plate (yellow area) (The middle cover is gray, and the right part of the fuel tank cover is red.) of the 4 buckle positions separated.

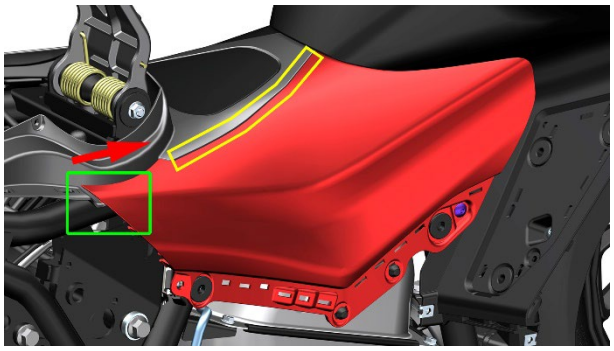

b. Grasp the mark (green rectangle) of the right cover part of the fuel tank and pull it out in the direction of the arrow until the two buttons (blue circles) on the fuel tank cover are pulled out, then remove the right fuel tank cover.

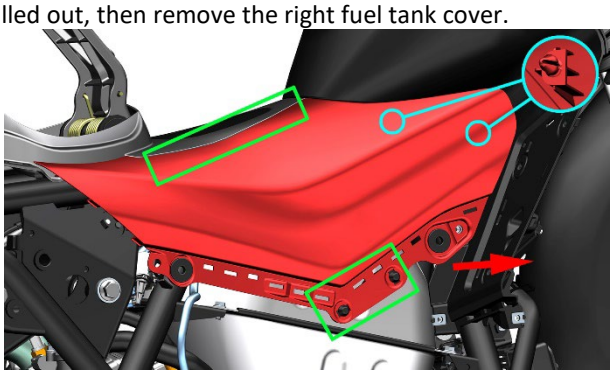

c. Remove the left part of the fuel tank cover by the same method.

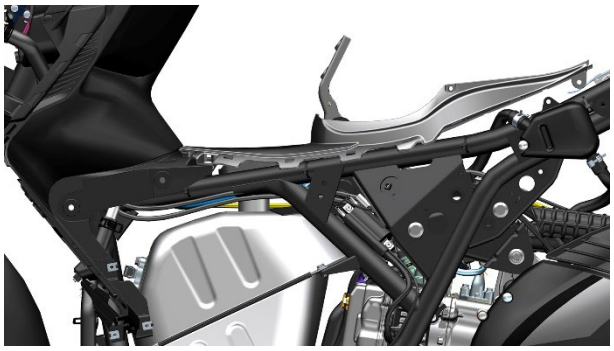

Disassembly the middle cover of the fuel tank

a. For model 368 (ETC), use a T25 Torx wrench to turn it over to the back; for other models, use 4# inner hexagon to remove the 2 M6x14 bolts fixed in the middle of the cover plate of the fuel tank.

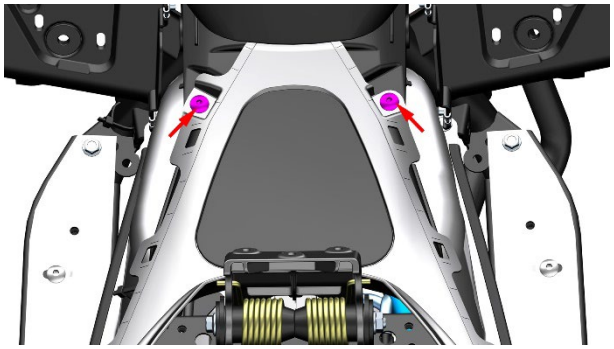

b. Connect the positive and negative terminals of the main wiring harness of the battery to open the tank lock or open the tank lock before removing the battery; For model 368 (ETC), use a T25 Torx wrench to turn it over to the back; for other models, use 4# inner hexagon to remove the M6x16

bolt fixing the oil tank cover, and unscrew the threaded oil tank

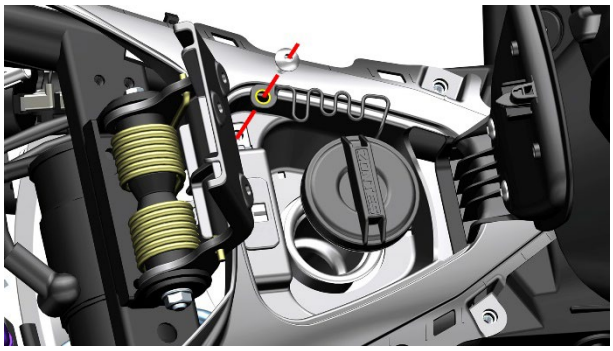

c. Find out and unplug the tank lock connector under the cushion stand and make the tank lock wire harness well.



d. Remove the oil tank cover; Press the cushion bracket with one hand and take out the middle of the tank cover plate with the other hand.

Caution: When taking out the middle part of the tank cover plate, it is necessary to pay attention to the wiring harness of the tank lock, so as not to get stuck and avoid pulling the wiring harness of the tank lock; to prevent dirt matters from entering the tank, immediately screw the tank cover back to the tank after removing the middle cover.



e. Remove the fuel tank lock after breaking the clips that fix the fuel tank lock to both sides. Pay attention to the strength when opening the clips to avoid breaking.

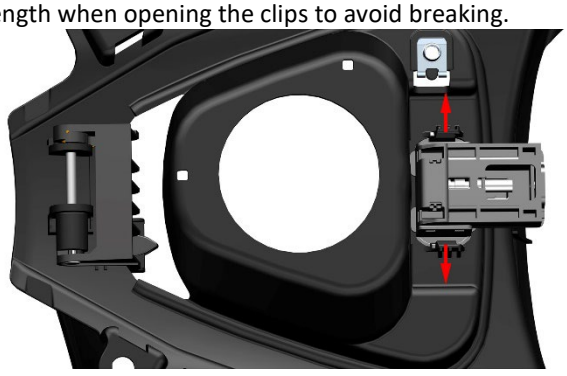

f. Use needle nose pliers to remove the circlip and pull out the rotating shaft. Remove the torsion spring and damper. Pay attention to the position of the torsion spring when installing.

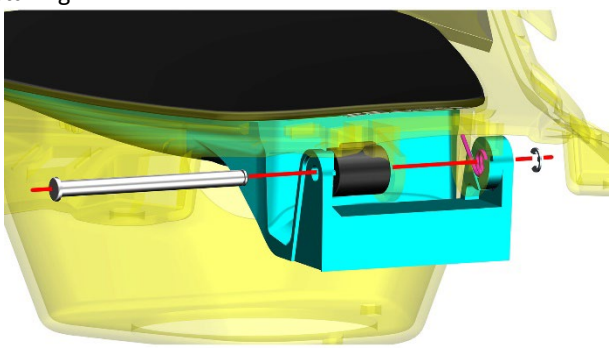

g. After removing the ST4.2×12 self-tapping screws with a 5# inner hexagon, separate the outer cover and the outer cover bracket. Note that there is a buckle on the head of the cover that is inserted into the cover bracket.

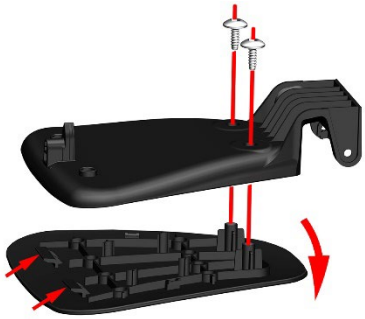

Disassembly the left and right storage boxes

a. Press the switch indicated by the small arrow to open the front right storage box; for model 368 (ETC), use a T25 Torx wrench to turn it over to the back; for other models, use 4# inner hexagon to remove 2 M6x14 bolts and a M6x16 bolt. Remove 1 nail of the front right storage box, finally remove the front right storage box.

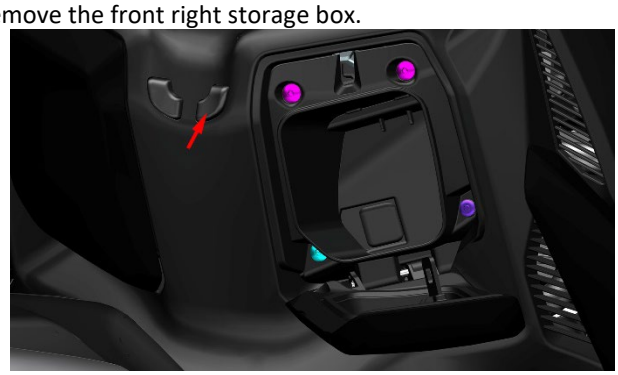

b. Use needle nose pliers to remove the circlip and pull out the rotating shaft. Remove the torsion spring and damper. Pay attention to the position of the torsion spring when installing.

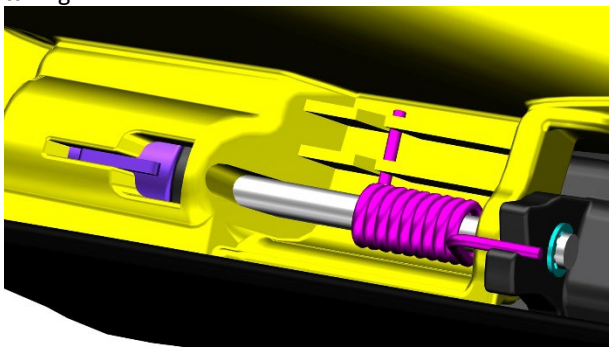

c. For model 368 (ETC), use a T25 Torx wrench to turn it over to the back; for other models, use 4# inner hexagon to remove 3 M6×14 shoulder bolts, and separate the inner and outer covers. Remove the 3-piece cleat nuts from the outer cover. The foam is attached to the inner lid with double-sided tape.



d. There are three ways to open the front left storage box :1. Before removing the battery, press the switch next to the front right storage box switch to open it .2, Use the battery to connect the positive and negative terminals of the vehicle to make the vehicle start up, press the switch next to the front right storage box switch to open it .3. Find out the front left storage box switch next to the tap lock or behind the front left storage box, and pull out the protruding part of the switch according to the direction of the arrow to the outside.

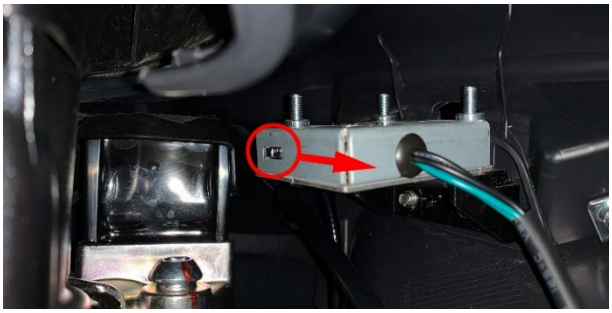

e. For model 368 (ETC), use a T25 Torx wrench to turn it over to the back; for other models, use 4# inner hexagon to remove 2 M6x14 bolts and 1 M6x16 bolt on the front left storage box. Remove the 1 nail securing the front left storage box with a 4# inner hexagon.

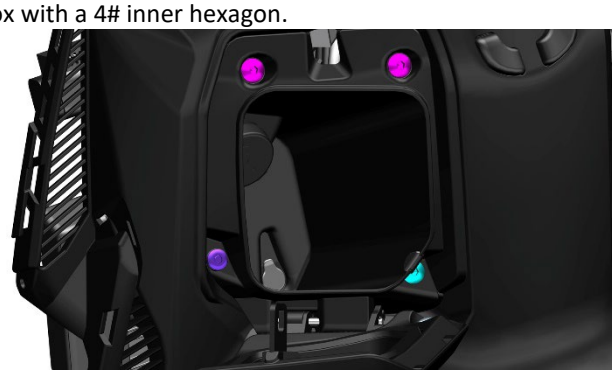

f. Remove the front left storage box to the appropriate position, unplug the USB connector of the front left storage box, and remove the front left storage box. Follow the steps for the right storage box cover to disassemble the left storage box cover.

Disassembly the front storage box panel

a. For model 368 (ETC), use a T25 Torx wrench to turn it over to the back; for other models, use 4# inner hexagon to remove the two M6x14 bolts from the front storage box panel.

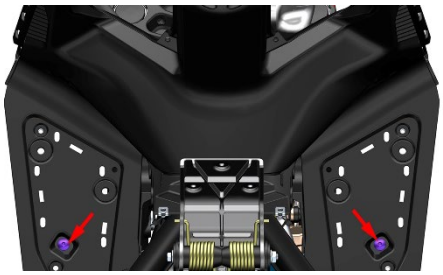

b. Find out the the 3 connectors on the left side of storage box panel and unplug them on the next to the tap lock



c. Find out and unplug the PKE bullet connector, PKE connector, and PKE antenna connector on the right side of the front storage box panel.

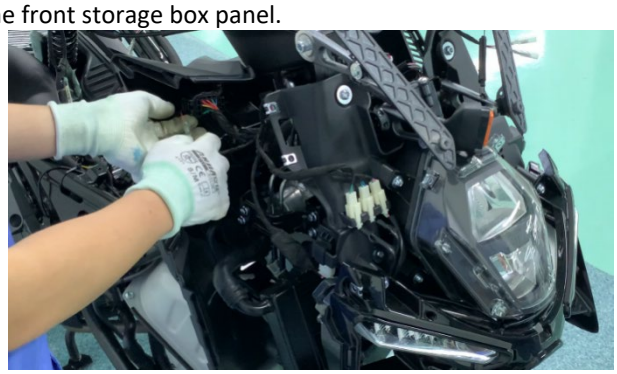

d. Remove the front storage box panel.



e. Flip to the back and pull the cable out of the lock frame in the direction of the arrow. Turn back to the front and for model 368 (ETC), use a T25 Torx wrench to turn it over to the back; for other models, use 4# inner hexagon to remove the M6×12 bolts, and hold the PKE bracket assembly ①, the right storage box lock assembly ②, and the electronic front storage box lock assembly ③ on the back.



f. Flip it over to the back and cut 2 cable ties, remove 3 ST4.2×12 self-tapping screws with 5# hexagon socket, and then remove the front storage box switch from the panel. Remove the zipper from the switch.



g. Remove the PKE

M310/125: Use 4# hexagon socket to remove 2 M6×14 shoulder bolts and then separate the PKE bracket and PKE. For details on the use and malfunction of PKE, please refer to the driver's manual delivered with the vehicle.



M155: Remove the self-tapping screw with a cross screwdriver to remove the charging port seat. Remove the electroless induction antenna.Remove the two bolts fixing the PKE with the 4 # hexagon socket.Remove two bolts with 4 # hexagon socket to separate the PKE mounting bracket from the third-generation PKE bracket. Remove the two cleat nuts from the bracket.



M350/368: After removing one expansion nail, use a 4# hexagon socket wrench to remove the two shoulder bolts securing the PKE bracket, then remove the PKE assembly. For M368 (ETC), use a T25 Torx wrench to remove the shoulder bolts. Use a Phillips screwdriver to remove the self-tapping screws and remove the charging port base. Remove the keyless induction antenna. Use a 4# hexagon socket wrench to remove the two shoulder bolts securing the PKE, then remove it. Remove the two captive nuts from the bracket.

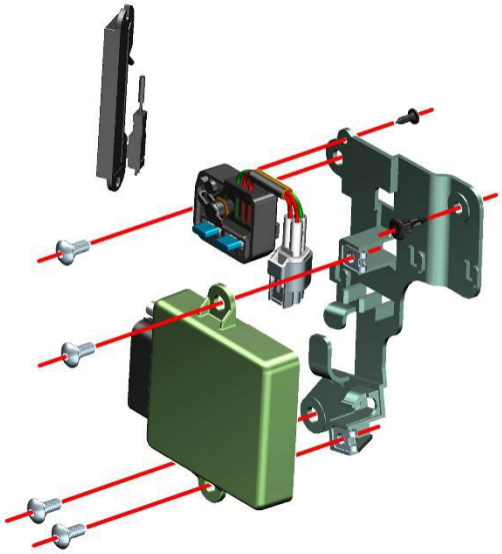

h. Use 5# hexagon socket to remove 2 M6×16 bolts and then separate the right storage box lock bracket and the right storage box lock.



i. Use a Phillips screwdriver to remove 3 M4×25 bolts and then remove the electronic storage box lock.



M368 tire pressure main engine

Follow the previous steps to remove the head and front storage boxes. Locate and unplug the tyre pressure unit. Use the T25 torx hexagon to remove the two bolts that fix the tire pressure engine

