ZT125&150&175T-V
Maintenance manuals

2026-10-19

Preface

All the information, illustrations, photos, etc. collected in this manual are compiled based on the latest product of ZT150T-V National IV . However, due to the continuous improvement of products and other changes, your motorcycle may be inconsistent with this manual. For color or upgrade, please refer to the part code of ZONTES official website. This manual will not list it in detail; if the part name in this manual is inconsistent with ZONTES official website, ZONTES official website shall prevail.

125/175V disassembly and assembly steps are similar to 150V, using 150V as a demonstration for explanation and will not be repeated.

If some of the contents of this manual are insufficient, please refer to the " Driving Manual" that comes with the vehicle. The latest version of the driving manual can be downloaded in PDF format in the corresponding model introduction on the ZONTES official website.

©GUANG DONG TAYO MOTORCYCLE TECHNOLOGY Co.,Ltd
All rights reserved

User Notice

This manual is compiled by Guangdong Tayo Motorcycle Technology Co., Ltd. for the guidance of dealers or service personnel . This manual cannot provide more detailed knowledge about motorcycles and is only used as a maintenance reference. If you do not have the corresponding knowledge such as electrician and mechanic, improper assembly or maintenance failure may occur during repair .

If you need to clean or wash the body parts of this vehicle, you should use neutral motorcycle wash liquid or tap water or diesel, kerosene, etc. Acidic or alkaline motorcycle wash liquids will cause irreversible corrosion to the paint, electroplated surface, anodized surface, etc. on the surface of the parts ; gasoline will cause premature aging or hardening of sealants, gaskets , rubber parts, etc., reducing the service life . Use non-woven cloth without residue for wiping. Ordinary rags may have cloth scraps or wool left on them , affecting assembly or causing other adverse effects.

Our company will try its best to update this manual in a timely manner after any changes are made to the product .

The following are the meanings of the icons in this manual:

DANGER	Failure to comply will result in personal injury or death to the driver or maintenance personnel; or cause serious damage to spare parts, shorten the service life, etc
WARNING	Failure to comply could result in personal injury or death to the driver or maintenance personnel; or cause damage or abnormality of spare parts
CAUTION	Failure to follow warnings can result in personal injury to the driver or maintenance personnel; or matters that need special attention in the process of disassembly and assembly
	It means that there is a requirement for torque
NEW	It means that the piece needs to be replaced after disassembly
	In order to facilitate the reading of the electronic version, if there is this symbol on the right side of the step, you can click the symbol to quickly jump to the corresponding chapter.

Contents

Preface 2

User Notice 3

Contents 4

1. Vehicle Information 9
- Notice before service 9
- Vehicle body sticker 10
- Technical parameters of ZT125/150/175T-V 11
  - Front wheel/steering system 11
  - Rear wheel/suspension system 11
  - Braking system 12
- ZT125/150/175T-V Battery/Charging System 12
- Description of lamps/instruments/switches 12
- Tightening torques 13
  - Tightening torque of bolts at general fastening parts 13
- Distribution diagram of cables/cables/pipelines/electrical components 14
  - 1. Lamps distribution map 14
  - 2. Throttle cable 14
  - 3. Brake upper pump and brake oil pipe 15
  - 4. Caliper, brake oil pipe and wheel speed sensor 15
  - 5. Distribution diagram of brake system accessories 16
  - 6.Fuel supply system 17
    - 6.1.Fuel evaporation 17
    - 6.2Fuel supply 17
  - 7.Cooling System Parts Distribution Diagram 18
  - 8. Electrical Component Layout Diagram 19
  - 9.Intake and exhaust system 20
- Tools 21
- Expansion nail description 22

2、Maintenance 23
- Notice before service 23
- 125/150T-V Maintenance cycle table 24
- 175T-V Maintenance cycle table 26
- 125/150V Air filter (filter element) , air inlet filter element 27
  - 1.Support the vehicle firmly 27
  - 2.Replace the air inlet filter 27
  - 3.Replace the air filter element 28
- 175V Air filter (filter element) , air inlet filter element 30
  - 1.Support the vehicle firmly 30
  - 2.Replace the air inlet filter 30
  - 3.Replace the air filter element 30
- Muffler bolts and nuts 32
  - Check for any air leakage at the exhaust port of the engine 32
  - Check the looseness of the silencer bolts and nuts, and inspect the aging and cracking of the heat-resistant board buffer gel 32
  - Remove the muffler assembly 32
- Engine oil 33
  - 1.Drain the engine oil 33
  - 2.Replace the fine filter 33
  - 3.Add engine oil 34
  - 4.Replace gearbox oil 34
  - 5. Confirm the oil level 34
- Throttle valve body 35
  - 1.Clean carbon deposits without removing the throttle valve body 35
  - 2.Remove the stepper motor and clean the carbon deposits 35
  - 3.Remove the throttle valve body assembly and clean the carbon deposits 35

4.Remove the sensor from the throttle valve body 36
5.Throttle valve body troubleshooting process 36
Throttle cable 36
1.Inspection 36
2.Adjust the throttle cable clearance 36
Idle 37
Check the idle speed 37
Radiator 38
1.Check the coolant 38
2.Add coolant (antifreeze) to the auxiliary water tank 38
3.Add coolant to the main water tank 38
4.Release coolant 39
5.Check whether the fins of the radiator tank are deformed or the air duct is blocked 39
6.Check all water pipes for leaks and signs of aging. 40
Fuel pipe 41
1.Use an endoscope with an LED light to check for fuel line leaks. 41
2.Replace high pressure fuel pipe 41
3. Fuel pump 41
3.1 Use a fuel pressure gauge to measure fuel pressure 41
3.2 Simple test of fuel pump 41
4.Fuel pressure abnormality handling 41
Braking System 43
Braking system component diagram: 43
1. Check the brake components 43
2. Check the front and rear brake switches 44
2.1 Check the brake switch 44
2.2 Replace the brake switch 44
3. Lubricate the movable parts of the brake handle 44
3.1 Lubricate the front brake handle. 44
3.2 Lubricating the rear brake handle 45
3.3 Replacing the brake handle 45
4. Replace the brake pads 45
4.1 Replace the front brake pads 45
4.2 Replace the rear brake pads 46
4.3 Abnormal sound of brake pads 46
5. Replace the brake disc 46
5.1 Replacing the front brake disc 46
5.2 Replacing the rear brake disc 46
Brake hose 47
Brake fluid 47
1.Add brake fluid to the front and rear disc brake master cylinders 48
2. Replace brake fluid 48
2.1 Replace the front brake fluid 48
2.2Replace rear brake fluid 49
3.Exhaust of brake system 49
Tire 49
1.Check the tires 49
2.Replace tires 50
Steering mechanism 50
1. Check the steering mechanism 50
2. Adjust the steering mechanism 50
3. Maintain steering bearings 50
4. Malfunction 50
Front fork 51
1.Check the appearance 51
2.Check shock absorption performance 51
3.Disassemble the front shock absorber 51
4.Correct the front fork tube 51
5.Troubleshooting 52
Rear shock absorption 52
1. Check 52

2. Adjust the preload 52
2.1 Adjust the left rear shock absorption 52
2.2 Adjust the right rear shock absorption 52
2. Replace the shock absorption 53
Bolts and nuts for body and engine installation 53
1. Check the fasteners for the critical parts 53
2. Check engine fasteners 53
Side Bracket 53
1.Inspection 53
2.Lubrication 54
Main bracket 54
1.Inspection 54
2.Lubrication 54
3.Install the main bracket 55
4.Replace the main bracket reset spring column 55
Sound, light and electrical device inspection 55
1.Inspection 55
Charging method 56
2.Headlight height adjustment 57
3.Fuse box 57
4.Troubleshooting 58
4.1 Right-hand switch 58
4.2 Horn 58
4.3 Lamp 59

3. Electronic Fuel Injection System 60
Notice before service 60
Fault Codes 61
1.Read the fault code through the instrument 61
2.Read the fault code through the diagnostic instrument 61
3.Clear fault codes 62
EFI parts layout 62
EFI schematic diagram 63
Fault diagnosis and troubleshooting of EFI parts 64
1.EFI relay 64
2.OBD interface 64
3.Fuel Pump 64
4.Oxygen Sensor 65
5.Water and Oil Shared Sensor 66
6.Fuel injector 67
Fuel Injector Installation Requirements 67
7. Crankshaft Position sensor 67
8.Ignition Coil 68
9.Throttle body 68
10.Engine Controller (ECU) 69
Engine cannot start and there is no sign of starting fault diagnosis process 70
Engine cannot start with motorcycle fault diagnosis process 71
Insufficient engine power diagnostic procedure 72
High idle speed on hot motorcycle 73
Cooling motorcycle idling unstable 73
Unstable idling speed, easy to stall 74
EFI fault indicator light always on analysis flow chart 75

4.Ignition system 76
Notice before service 76
Troubleshooting 77
Spark plug no spark 77
Starting system layout 79
Ignition system electrical schematics 79
Ignition system inspection 80
Ignition coil 80

5. Starting system 81
Notice before service 81
Troubleshooting 81
Starting system layout 81
Starting system electrical schematics 82
Starter relay 83
Start-stop controller 84

6.Fuel supply system 85
Notice before service 85
Fuel tank removal 86
1.Disassemble the fuel tank assembly 86
2.Remove the fuel pump 87
3.Disassembly of external components of the fuel tank assembly 87
Inspection 88
1.Fuel pressure test 88
2.Fuel pump inspection 88
3.Oil level sensor 88

7.Cooling system 89
Notice before service 89
Troubleshooting 89
1.Engine temperature is too high： 89
2. Engine temperature is too low： 89
3.Coolant leakage 89
Coolant system distribution diagram 90
Coolant flow diagram 91
Cooling system disassembly 92
Remove the radiator components 92
Coolant system clamp /clamp distribution diagram 93
Thermostat assembly and small loop 94
Cooling system accessories 96
1.Main water tank 96
2.Auxiliary water tank 96
3.Water and oil shared sensor 96
4.Thermostat 96
4.1 Inspection 96
4.2 Fault phenomenon 96
4.3 Disassembly 96
5.Water pipes 97

8.Braking System 98
Notice Before Service 98
Troubleshooting 99
Brake Handlebar Soft 99
Brake Handlebar Hard 99
Disassemble disc brake master cylinder and caliper 99
Disassemble disc brake master cylinder 99
Disassembled disc brake master cylinder 100
Front disc brake caliper 100
Disassembled disc brake caliper 101
Wheel speed sensor and reluctor ring gap inspection 102

9. Battery/Charging System 103
Before Service Notice 103
Troubleshooting 104
Charging System Layout Diagram 105
Electrical Schematic Figure 105
Battery removal and installation 106
1.Disassemble 106
2.Check 106
3.Charging 106

Charging system inspection 106
1.Leakage test 106
2.Check the charging voltage 106
3.Inspection of the charging coil of the magnetoelectric stator 106

10. Front Fork Assembly 108
Notice Before Service 108
Fork assembly exploded view： 109
Handlebar exploded view 109
Front Fork Exploded View 110
Lower Couplet Panel Exploded View 111
Change Handlebar 112
1.Disassemble the handlebar assembly 112
2.Install the component in the specified direction 112
Replace the front wheel 112
1.Disassemble the front wheel assembly 112
2.Install front wheel assembly 113
Front Wheel Assembly Diagram: 113
Front Wheel Assembly Inspection and Maintenance： 114
1.Disc brake rotor 114
1.1 The service life of a disc brake rotor 114
1.2 How to Replace a Disc Brake Rotor 114
2.Front wheel oil seal and bearing 114
2.1 Service life of front wheel oil seals and bearings 114
2.2 Methods for Replacing Front Wheel Oil Seals and Bearings 114
3.Front wheel rim and tire 114
3.1 The service life of front wheel rim and tire 114
3.2 How to Replace Front Wheel Rim and Tire 114
3.3 Dynamic balance 114
Shock absorber replacement 115
1.Remove the front wheel and front fender assembly 115
2.Remove the left and right front shock absorber 115
3.Reassemble components such as the shock absorber, front fender, and front wheel 115
Replace the lower coupling plate 116
1.Disassemble parts in advance 116
2.Disassemble the handlebar spacers and lower coupling plate 116
3.Install the lower coupling plate assembly 116
4.Install other removable components 117

11. Assembly and Disassembly of Vehicle Body Panels 118
125V removal of the windshield 120
150/175V removal of the windshield 120
Removal of the front left and right panels 120
Removal of the front top panel 120
Disassembly of Instrument and Instrument Panel 120
Removal of the left, right, and lower fairings of the head 121
Removal of the front left and right headlights 121
Disassembly of the front luggage compartment subassembly 121
Removal of the seat cushion 122
Disassembly of the storage box 122
Disassembly of the left and right side covers 122
Disassembly of the enclosure around the middle 122
Disassembly of the enclosure bottom 123
Removal of left and right pedals 123
Removal of the fuel tank cover 124
Removal of the left and right decorative covers of the tail skirt 124
Removal of the rear armrest 124
Rear Skirt Assembly Disassembly 125

1. Vehicle Information

Notice before service

1. High-quality tools or the specially designed tools and fixtures provided by our company should be used. Using inferior tools may result in damage to the parts, the detachment of the coating, or improper assembly.
2. Before assembling O-rings, paper pads, copper pads, component sealing rings, etc., they must be replaced with new ones.
3. For fastening components with torque requirements, a torque wrench should be used to check the torque; for those without torque requirements, refer to the general torque values recommended for common fasteners.
4. Before assembly, the parts should be cleaned thoroughly; after assembly, check if the assembly is correct and in place.
5. The vehicle should be parked evenly, and safety should be observed during disassembly and assembly. This includes the use of electric tools, manual tools, pneumatic tools, hydraulic tools, and lifting; avoid contact with skin, eyes, and burns.
6. All types of oil, fluids, batteries, etc. that are replaced should be uniformly recycled and handed over to qualified institutions for disposal; it is prohibited to randomly dump them to pollute the environment or water sources.
7. Swallowing or inhaling coolant, brake fluid, etc. will cause certain harm to the human body. After each addition, promptly and thoroughly clean any exposed skin, such as hands and face. If accidentally swallowed, contact the poisoning control center or hospital immediately; if inhaled, go to a well-ventilated environment immediately. If accidentally splashed into the eyes, immediately rinse the eyes with a large amount of water and seek medical treatment or visit a doctor promptly. Be sure to keep away from children and pets.

Only a few key points that need attention and basic requirements for preventing accidental injuries can be listed; it is impossible to cover all possible situations in detail. During the disassembly and assembly process, always remain vigilant to prevent accidents from occurring.

Vehicle body sticker

① The nameplate is pasted above the mounting point of the rear shock absorber and the frame.
② The muffler regulatory code is on the inner side of the muffler above it.
③Vehicle Identification Number (VIN): Located above the installation of the right frame and rear footrest.
④The Engine Identification Number is engraved on the left crankcase.

Note: The contents of the nameplates, muffler regulations codes and warMuffleerning stickers vary for different engine displacements.

① Name plate ② muffler regulatory code ③ VIN

Engine Identification Number

Technical parameters of ZT125/150/175T-V

Project		Parameter	
Complete vehicle	Front tire	110/70—14	
	Rear tire	130/70—13	
	Front rim specifications	MT:2.75×14	
	Rear rim specifications	MT:3.5×13	
	Brake fluid	DOT4	
	Oil consumption	Replacing the fine filter:	0.87L（0.92 US qt,0.76 Imp qt,0.23 US gal,0.19 Imp gal）
		Do not replace the fine filter:	0.8L（085 US qt,0.7 Imp qt,0.21 US gal,0.18 Imp gal）
	Gearbox oil quantity	0.12L（0.13 US qt,0.11 Imp qt,0.03 US gal,0.03 Imp gal）	
Engine	Fuel oil	95 and above	
	Idle speed (R/min)	1700±100	
Spark plug	Spark plug model（125/150）	CR8E	
	Clearance（125/150）	0.7～0.8mm(0.028～0.031 in)	
	Spark plug model（175）	NGK/LMAR8A-9	
	Clearance（175）	0.8～0.9mm(0.031～0.035 in)	
	Resistance (kΩ)	3～7.5	
Cooling system	Total amount of coolant	0.7 kg	
	Thermostat opening temperature	80～84℃(176～183.2 F)	
	Thermostat full open temperature	95℃(203 F)	
	Opening stroke of thermostat	≥3.5mm(0.13 in)	
	Type of coolant	Ethylene glycol + distilled water	

Front wheel/steering system

Project		Standard	Limit value
Tread depth		-	≥1.6mm(0.063 in)
Normal temperature standard tire pressure		195kPa(1.99 kgf/cm2， 28.28PSI)	-
Front wheel rim	Radial runout	-	1.5mm(0.006 in)
	Axial runout	-	1.5mm(0.006 in)

Rear wheel/suspension system

Project		Standard	Limit value
Tread depth		-	≥1.6mm(0.063 in)
Normal temperature standard tire pressure		230kPa(2.35 kgf/cm2， 33.4 PSI)	-
Rear wheel rim	Radial runout	-	1.5mm(0.006 in)
	Axial runout	-	1.5mm(0.006 in)
V-belt 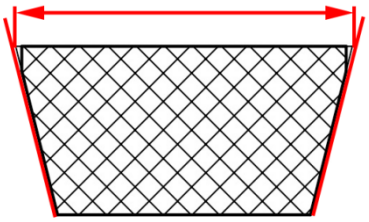	Top Width (1)	24±0.3mm(0.95±0.012 in)	⩾23mm(0.906 in)

Braking system

Project		Standard	Limit value
Front disc brake	Brake fluid	DOT4	-
	Brake pad service limit	-	Slot bottom
	Brake disc thickness	4.5±0.1mm(0.177±0.004 in)	＜4.0mm(0.157 in)
Rear disc brake	Brake fluid	DOT4	-
	Brake pad service limit	-	Slot bottom
	Brake disc thickness	4.0±0.1mm (0.157±0.004 in)	＜3.5mm(0.138 in)

ZT125/150/175T-V Battery/Charging System

Project			Standard
Battery	Type		Maintenance-free battery
	Capacity		7Ah
	Battery self-discharge current		Average 1.1mA
	Voltage	Full power	13.1～13.3V
		Unloaded charging voltage required	≤12.8V
		Charging voltage required for loading	≤12V
	Constant voltage charging mode	Constant pressure range	14.4～14.8V
		Initial charge current	0.1-0.2 times of battery capacity
		Charging time	6-24 hours
	Constant current charging mode	Maximum charge current	0.1 times the battery capacity
		Charging time	7-10 hours
		The charging current × charging time must be controlled within the range of 0.5 ~ 0.8 times of the battery capacity	

Description of lamps/instruments/switches

Project			Parameter
Lamps (LED)	Headlights	High beam (sum)	19.4W
		Dipped beam (sum)	12.4W
	Front position lamp (sum)		8.6W
	Rear position lamp		1.8W
	Front turn signal		7.2 W/side
	Rear turn lamp (sum)		4W/side
	License plate lamp		0.44W
	Brake lamp (sum)		7.8W
	Atmosphere lamp of storage box		0.2W
Insurance	Main insurance		25A
	ECM		15A
	ABS hydraulic control unit motor		25A
	Hydraulic control unit ECU		15A
	Lights		15A
	PKE		15A
	Spare		25A*1、15A*2、10A*1
Water temperature sensor	Normal temperature		1.5～4.0 KΩ

Tightening torques

Tightening torque of bolts at general fastening parts

	Class 4.8-6.8 (bolt head marking "4")			Class 8.8 (bolt head marking "7" or "8.8")		
Bolt diameter	Tightening torque range	Standard value	Breaking moment	Tightening torque range	Standard value	Breaking moment
M4	1-2	1.4	/	1.5-3	2.5	/
M5	2-4	2.9	4.5	3-6	4.5	8
M6	4-7	4.9	10	8-12	10	14.5
M8	10-16	12.2	20	18-28	22	34
M10	22-25	24.5	45	40-60	44	76
M12	35-55	43	75	70-100	77	112
M14	50-80	69	123	110-160	124	200
M16	80-130	110	195	170-250	200	300
M18	130-190	150	285	200-280	270	450

Note: The tightening torque for the connection of plastic parts is half of the tightening torque of Grade 6.8 bolts.

Distribution diagram of cables/cables/pipelines/electrical components

1. Lamps distribution map

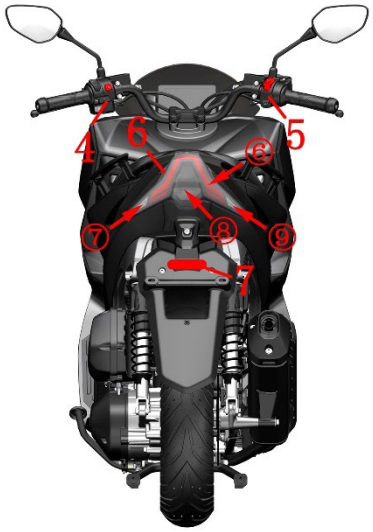

1 - Right headlight (① - Position light ② - Front right turn signal ③④ - High beam ④ - Low beam) 2 - Left headlight (① - Position light ③④ - High beam ④ - Low beam ⑤ - Front left turn signal) 3 - Side reflector 4 - Left handlebar switch 5 - Right handlebar switch 6 - Taillight (⑥ - Rear position light ⑦ - Left rear turn signal position ⑧ - Brake light ⑨ - Right rear turn signal position) 7 - Rear reflectorr

2. Throttle cable

1-Throttle line

3. Brake upper pump and brake oil pipe

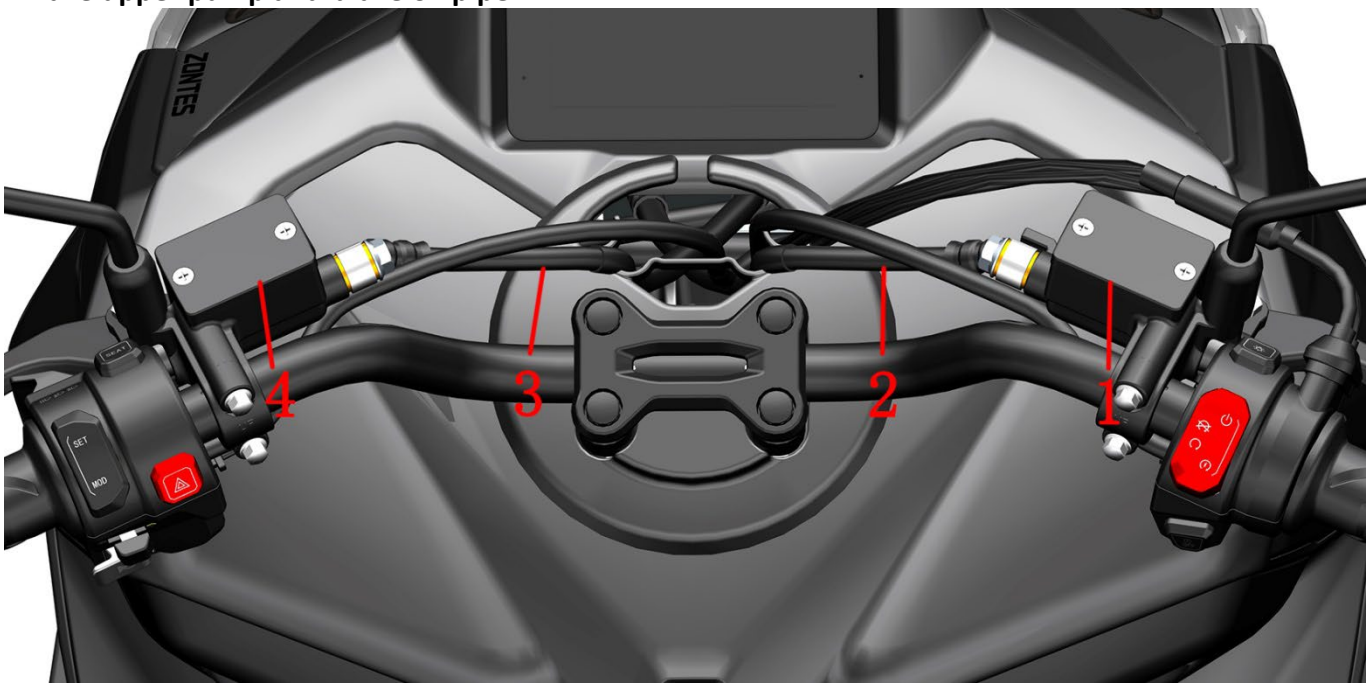

1-Front disc brake main pump 2-FMC-HU brake hose 3-RMC-HU brake hose 4-Rear disc brake main pump

4. Caliper, brake oil pipe and wheel speed sensor

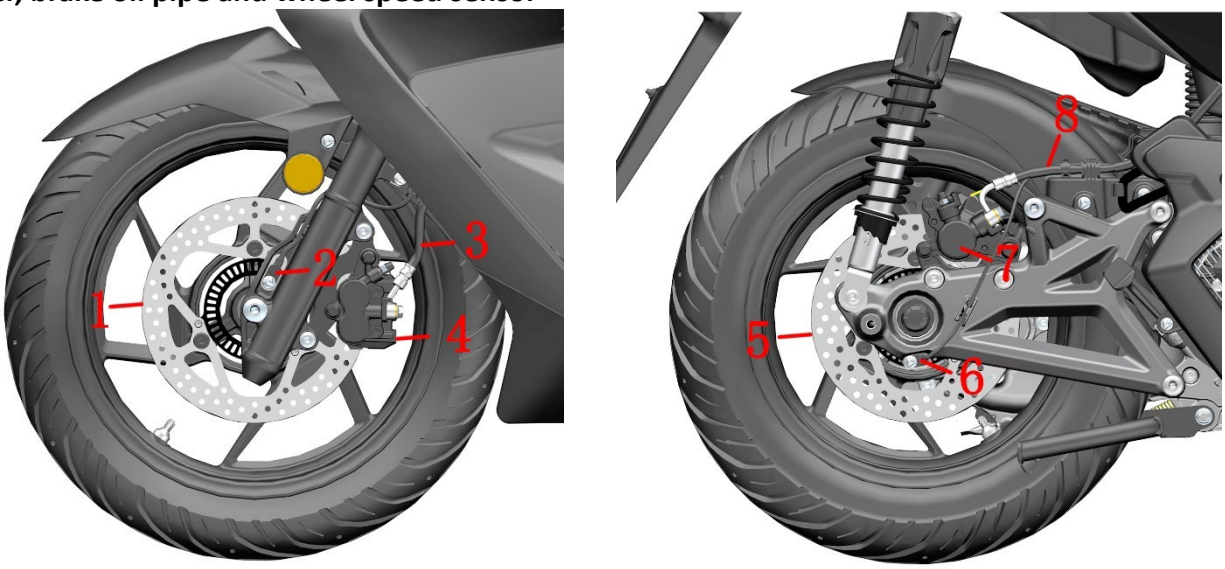

1-Front brake disc 2-Front wheel speed sensor 3-FC-HU brake hose 4-Front disc brake caliper
5-Rear brake disc 6-Rear wheel speed sensor7-Rear disc brake caliper 8-RC-HU brake hose

5. Distribution diagram of brake system accessories

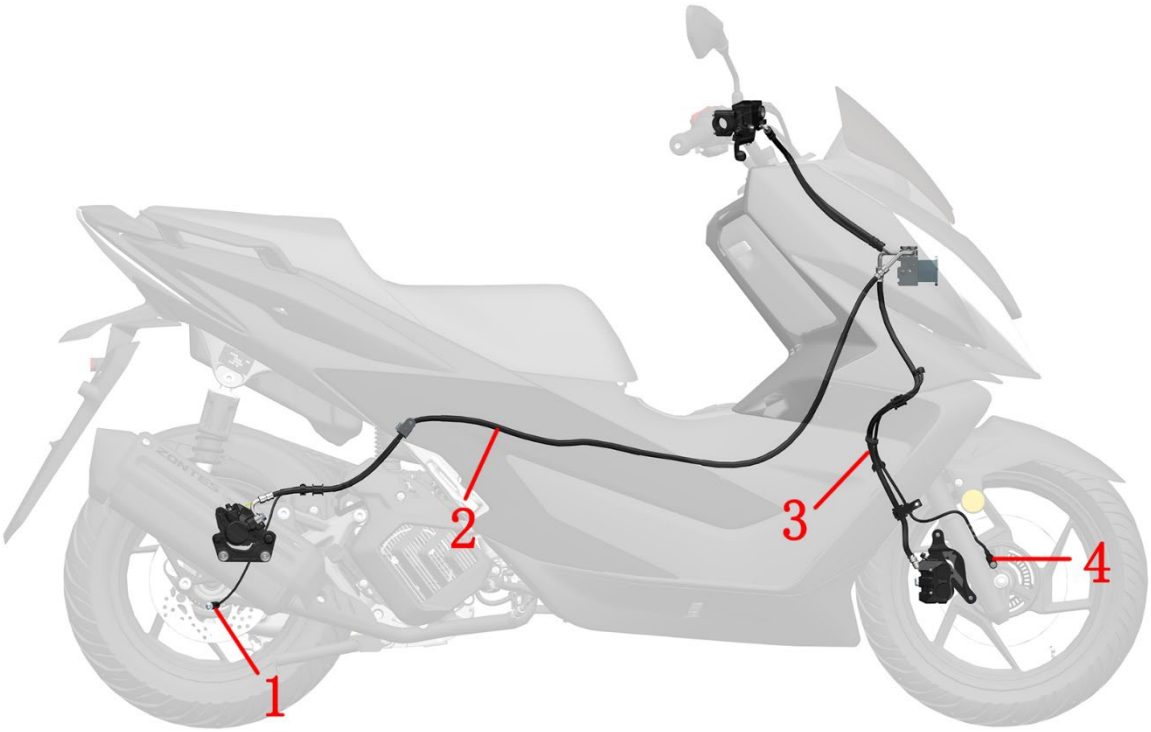

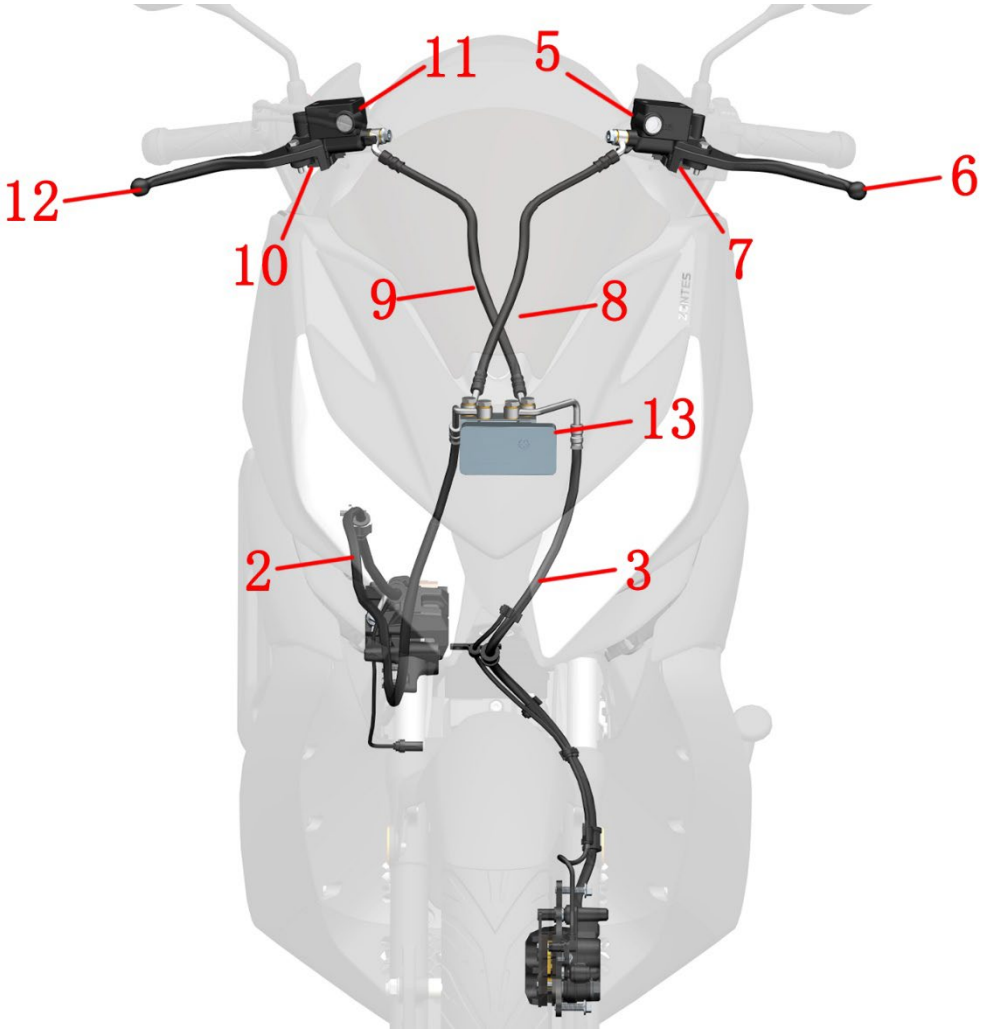

1-Wheel speed sensor (rear wheel) 2-FC-HU brake hose 3-RC-HU brake hose 4-Wheel speed sensor (front wheel) 5-Rear disc brake main pump 6-Rear brake handle 7-Rear brake switch 8-RMC-HU brake hose 9-FMC-HU brake hose 10-Front brake switch 11-Main pump of front disc brake 12-Front brake handle 13-Hydraulic control unit

6.Fuel supply system

6.1.Fuel evaporation

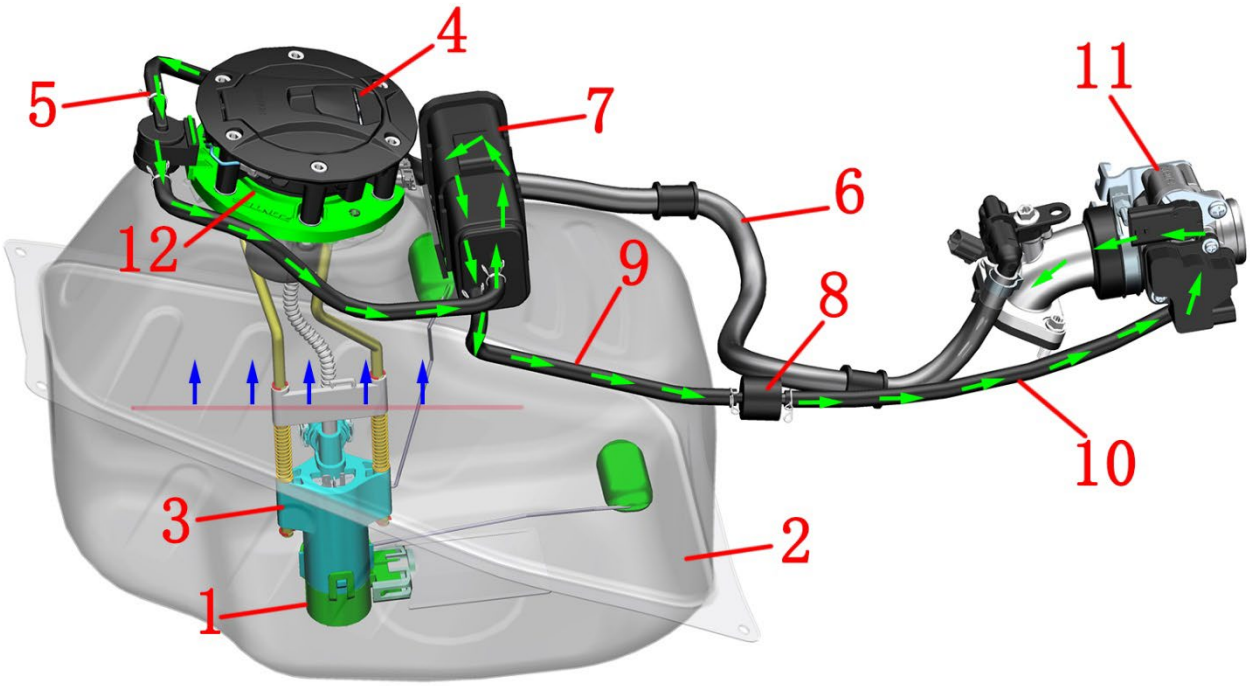

1- Fuel level sensor 2- Fuel tank 3- Fuel pump 4- Fuel tank cap 5- Adsorption/vent pipe 6- High-pressure fuel pipe 7- Carbon canister 8- Carbon canister solenoid valve 9- Solenoid valve intake pipe 10- Solenoid valve exhaust pipe 11- Throttle body assembly 12- Fuel -gas separator (inside fuel tank lock)

Fuel evaporation：

Fuel and gas→Fuel -gas separator (inside the fuel tank)→ Adsorption/ventilation pipe→Solenoid valve intake pipe→Solenoid valve exhaust pipe→Throttle body assembly→Intake manifold→Cylinder

6.2Fuel supply

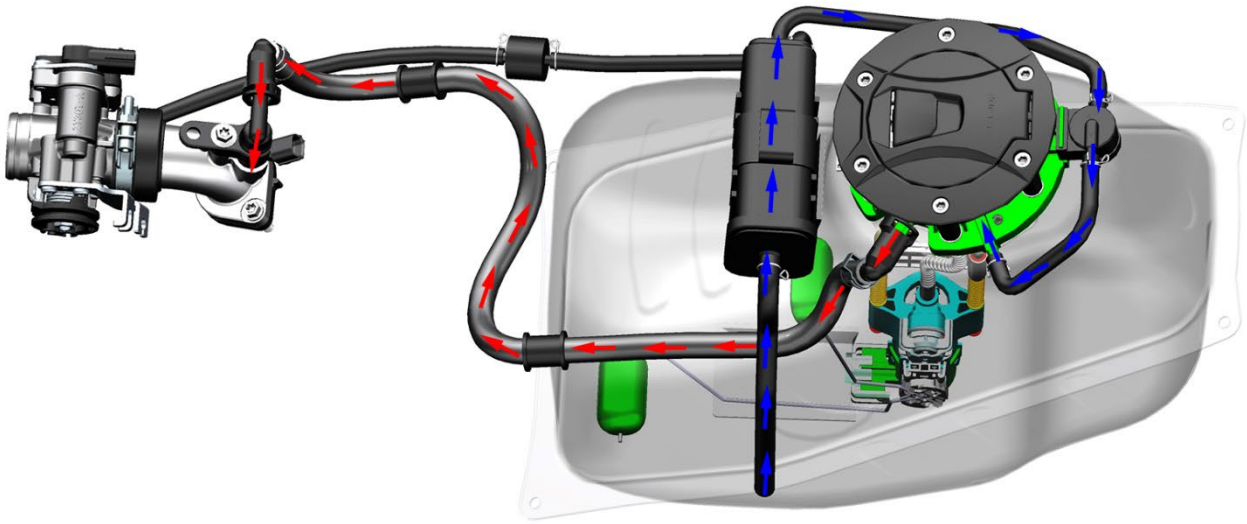

Fuel supply system：

Air→Carbon Canister→Adsorption/Vent Pipe

Fuel→Fuel pump filter→Fuel pump→High-pressure fuel pipe→Fuel injector→Cylinder

7.Cooling System Parts Distribution Diagram

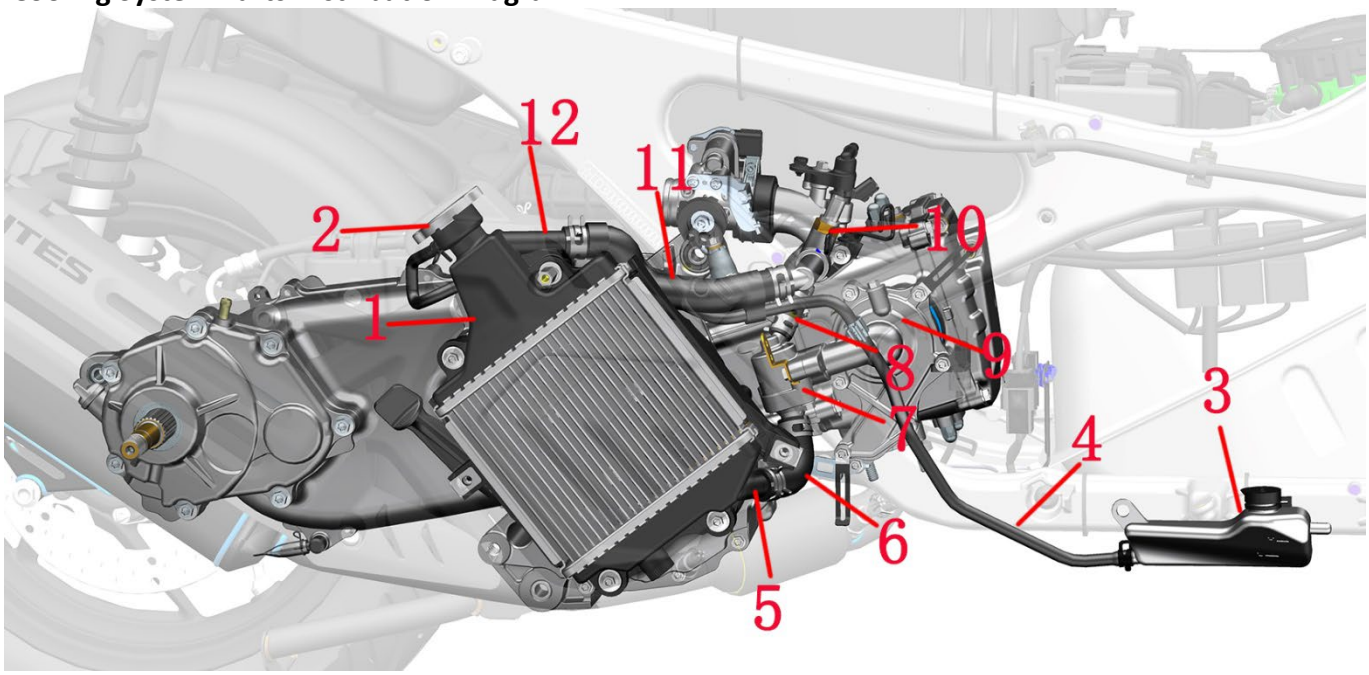

1- Main Water Tank 2- Water Tank Fill Port 3- Auxiliary Water Tank 4- Auxiliary Water Tank Connecting Pipe
5- Main Water Tank Outlet 6- Engine Inlet Pipe 7- Thermostat 8- Thermostat Outlet Pipe 9- Water Cap Assembly
10- Water-Oil Shared Sensor 11- Engine Outlet Pipe 12- Main Water Tank Inlet

8. Electrical Component Layout Diagram

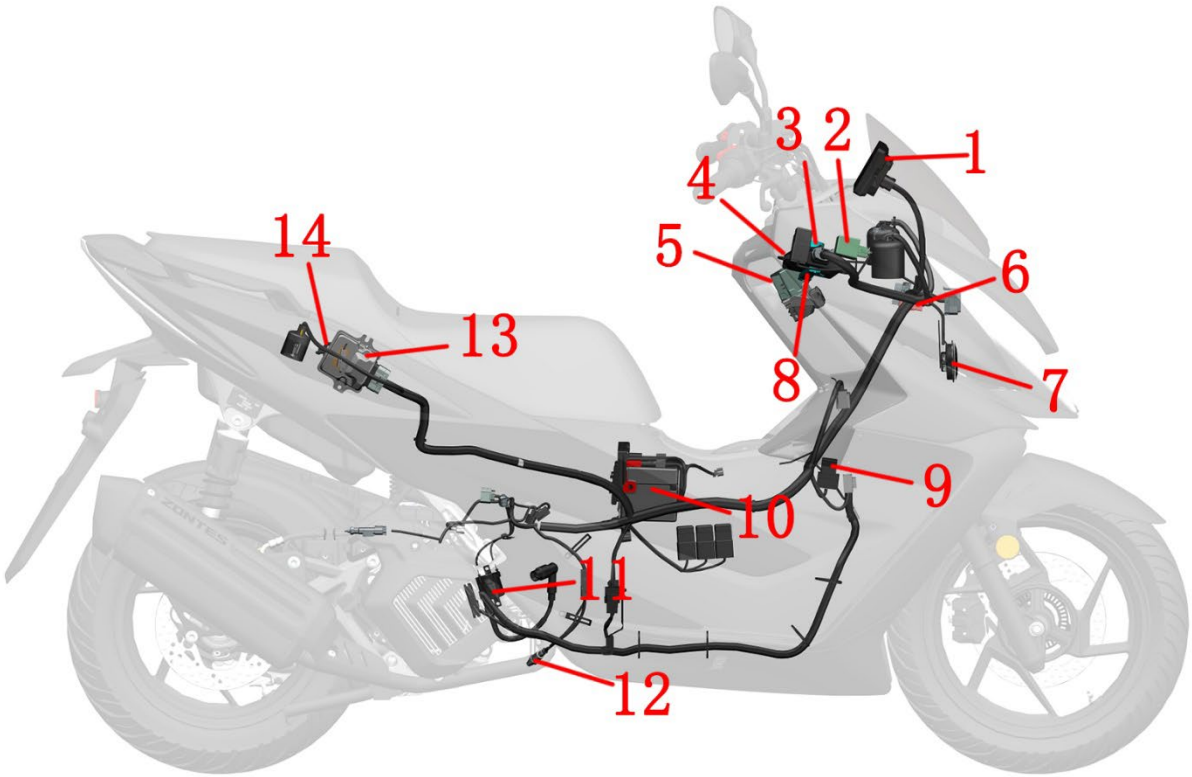

1- Instrument 2- PKE main unit 3- Buzzer 4- Handlebar lock 5- Passive induction antenna 6- USB charging port 7- Horn 8- Flasher 9- Starter relay 10- Battery 11- Ignition coil 12- Oxygen sensor 13- Rear storage box ambient light 14- MSE controller

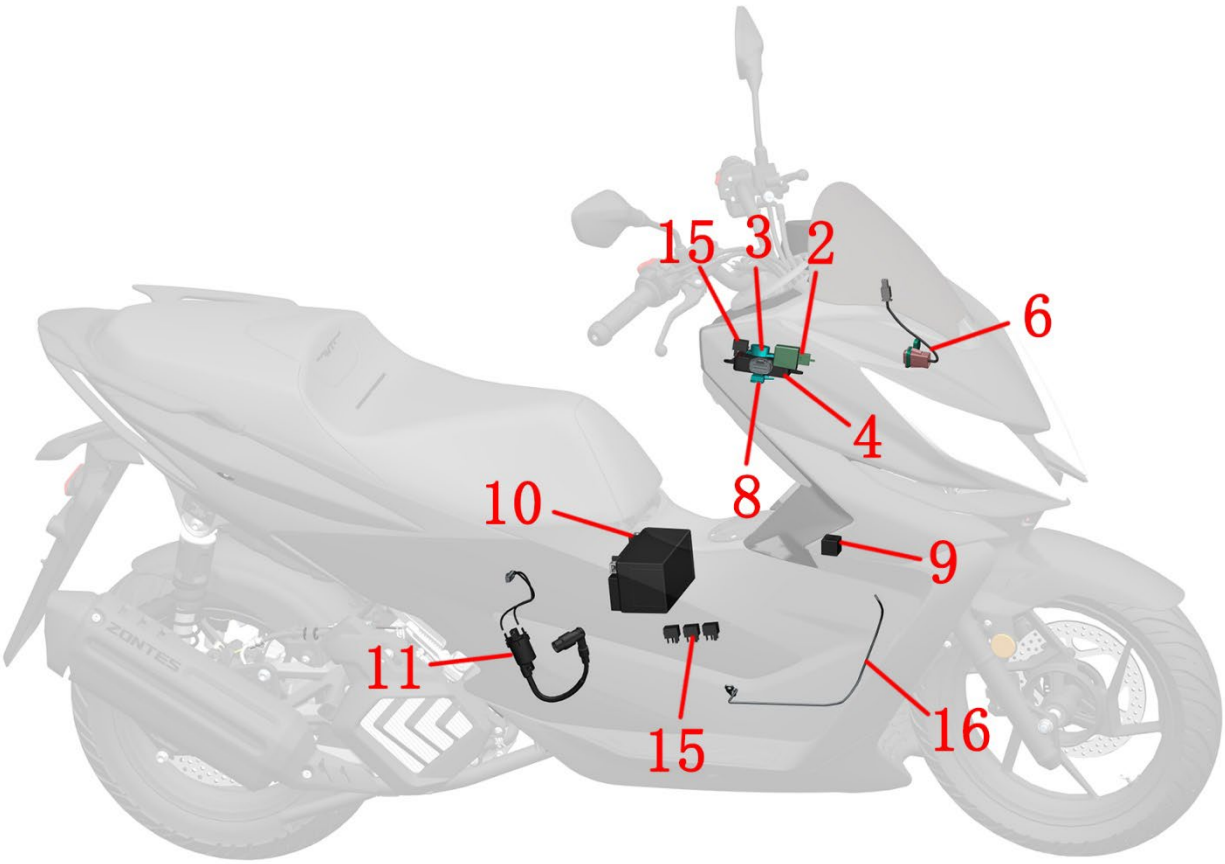

1-Instrument 2-PKE Main Unit 3-Buzzer 4-Handlebar Lock 5-No-Current Induction Antenna 6-USB Charging Port 7-Horn 8-Flasher 9-Start Relay 10-Battery 11-Ignition Coil 12-Oxygen Sensor 13-Rear Storage Box Ambient Light 14-MSE Controller 15-Fuel Injection Relay 16-Side Stand Engine Cutoff Switch

9.Intake and exhaust system

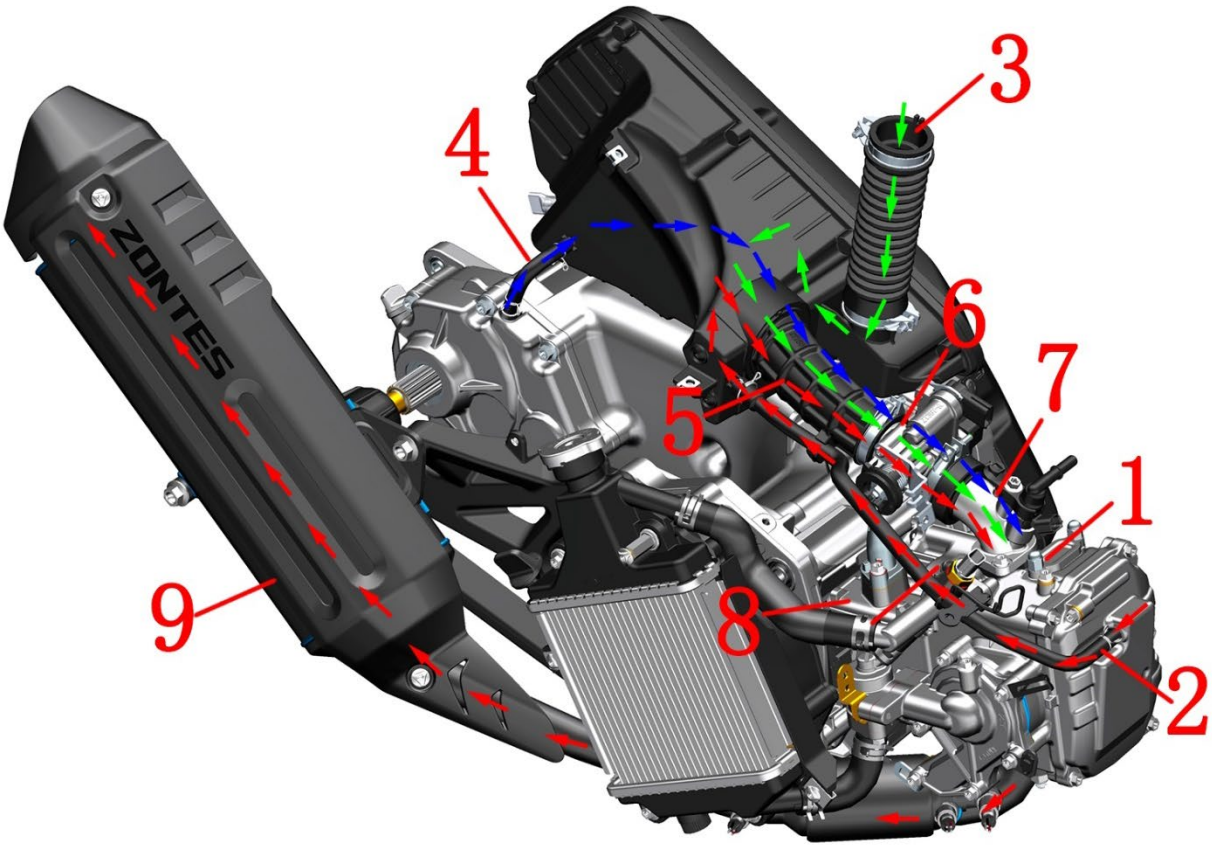

1- Cylinder head 2- Cylinder head exhaust pipe 3- Air filter intake 4- Gearbox exhaust pipe 5- Air filter outlet pipe
6- Throttle body assembly 7- Intake manifold 8- Cylinder 9- Muffler

Intake system (indicated by green arrows)
Air→Air filter inlet→Air filter element→Air filter outlet pipe→Throttle valve assembly→Intake manifold→Cylinder→Silencer

Cylinder head exhaust gas control system (indicated by red arrows)
Exhaust gas→Cylinder head cover→Cylinder head exhaust pipe→ Air filter→Air filter outlet pipe→Throttle body→Intake manifold→Cylinder→Muffler

Gearbox exhaust control system (indicated by blue arrows)
Exhaust gas→Gearbox exhaust pipe→Air filter outlet pipe→Throttle body→Intake manifold→Cylinder→Silencer

Tools

125-Piece Tool Set	Torque wrench	Vehicle Tools	Ram's horn hammer
Size up	Rubber mallet	Dynamic Balancing Machine	tire changer
oil pan	Measuring cup	Funnel	Taps and dies
Micrometer	Depth gauge	Vernier caliper	Feeler gauge
Tire Pressure Gauge	Magnetic Base Dial Indicator	PT300 Electronic Fuel Injection Programming Diagnostic Tool	17# Allen Wrench

Hose clamp pliers	Snap Ring Pliers	External Circlip Pliers	Clamp multimeter
			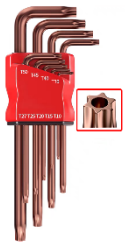
Multimeter	Air Blower	T45/50 Plum Blossom Slotted Sleeve	T25/45/50 Clutch Hole Wrench
The above pictures are from the Internet and are copyrighted by the original authors. They must not be used for any other purposes.			

Expansion nail description

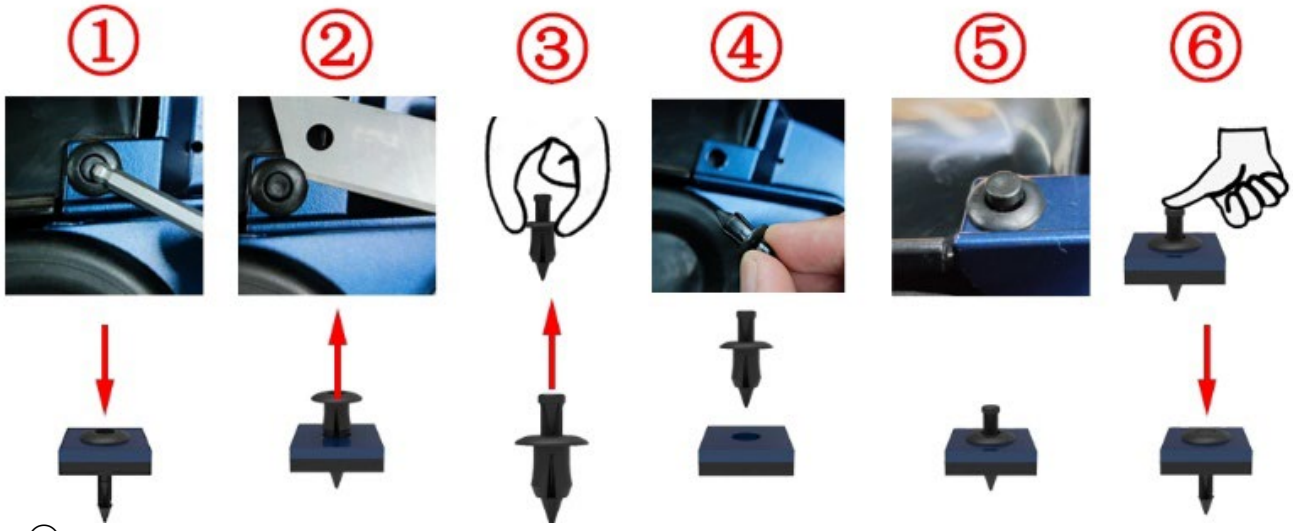

①Use a 4# hexagon or other tools to press down the central cylinder, and you will hear a sound or observe a 2mm axial movement of the central cylinder.

②Use a blade, nail, or carving knife to pry open the gap and then remove it; if the space is sufficient, you can reach behind and push the central cylinder to its original position.

③Pinch the outer ring with two fingers and push the central cylinder upwards to its initial position.

④Pinch the central cylinder with two fingers and install the expansion nail to the installation position.

⑤The outer ring should be in close contact with the connected component; if not, check for any misalignment.

⑥Press the central cylinder with your fingers or other tools. You will hear a sound or observe that the top of the central cylinder is basically flush with the top surface of the outer ring, indicating that the assembly is complete.

2、Maintenance

Notice before service

1. High quality tools or specialized tools, fixtures, etc. designed by our company are required. Using inferior tools may cause damage to parts, peeling of coatings, and improper assembly.

2. O-rings, paper pads, copper pads, component sealing rings, etc. used for sealing must be replaced before assembly.

3. Fasteners with torque requirements require the use of a torque wrench to verify the torque; Refer to the recommended universal torque values for universal fasteners that do not require torque.

4. Clean thoroughly before assembly; After assembly, it is necessary to check whether the assembly is correct and in place.

5. The vehicle should be parked and balanced, and safety should be taken into account during disassembly and assembly. Including but not limited to the use of electric tools, manual tools, pneumatic tools, hydraulic tools, and handling. Prevent contact with skin, eyes, burns, electric shocks, etc.

6. All types of oil, fluids, batteries, etc. that have been replaced must be collected and handed over to qualified institutions for disposal; It is prohibited to dump pollutants into the environment or water sources at will.

7. Swallowing or inhaling coolant, brake fluid, etc. can cause certain harm to the human body. After each addition, any exposed skin such as hands and face should be thoroughly cleaned in a timely manner. If accidentally swallowed, immediately contact the poison control center or hospital; If inhaled, immediately enter a ventilated environment. If accidentally splashed into the eyes, immediately rinse the eyes with plenty of running water and seek medical attention promptly. Be sure to stay away from children and pets.

8. If it is necessary to clean or wash the body parts of this vehicle, neutral car wash fluid, tap water, diesel, kerosene, etc. should be used. Acidic or alkaline car wash solution can cause irreversible corrosion on the surface paint, electroplated surface, anodized surface, etc. of parts; Gasoline can cause premature aging or hardening of sealants, gaskets, rubber parts, etc., reducing their service life. Non woven fabrics that do not leave any residue should be used for wiping. Ordinary cloths may have residual debris or yarn that can affect assembly or cause other adverse effects.

9. The following are instructions for disassembling and assembling expansion nails.

10. If there is a " " symbol on the right side of the step, you can click to quickly jump to the corresponding step.

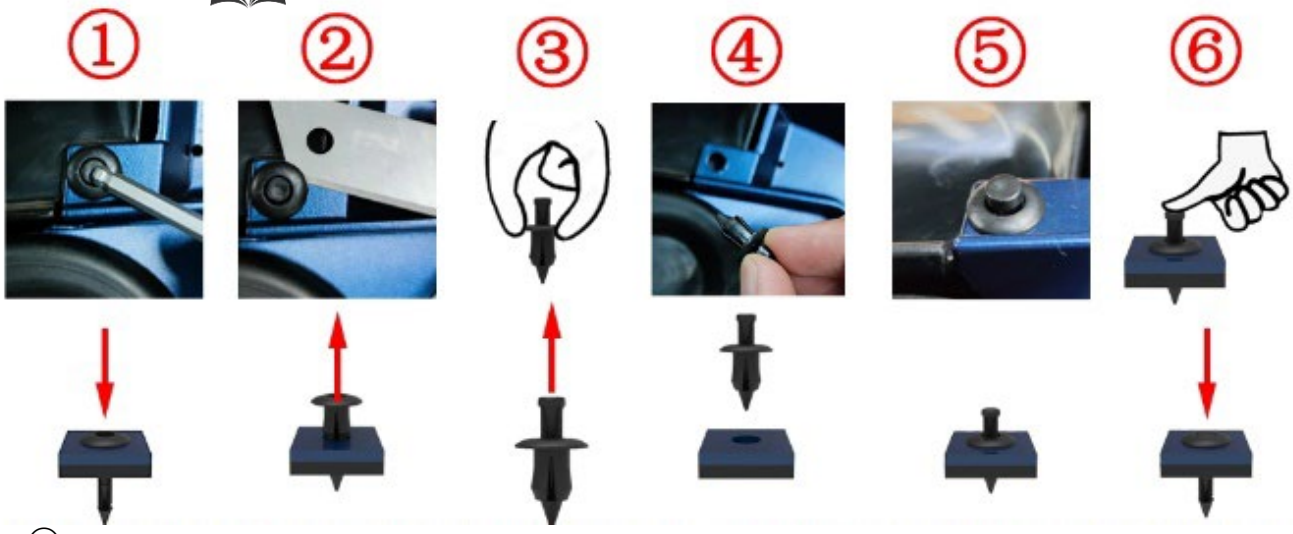

①Press down the central cylinder with a 4 # hexagon or other tool, and you can hear a sound or move the central cylinder axially by 2mm (0.079 in);

②Use a blade, nail, or carving knife to pry open the gap and remove it; If space allows, reach out to the back and push out;

③Pinch the outer ring with two fingers and push the central cylinder upwards to its initial position;

④Pinch the central cylinder with two fingers and install the expansion nail in the installation position;

⑤The outer ring adheres to the connected components; If it does not fit properly, check for misalignment;

⑥Press the center cylinder with your fingers or other tools, and you can hear a sound or the top of the center cylinder is almost level with the top surface of the outer ring, indicating that it is assembled in place.

Only some basic requirements for precautions and prevention of accidental injuries can be listed; It is not possible to list all the situations in detail. Be vigilant during the disassembly process to prevent accidents.

125/150T-V Maintenance cycle table

I:Check (if necessary, clean, lubricate, adjust or replace) **R**: Replace **T**: Tighten ★: Annotation

Item		Inspection before driving	Rate*1						Annual inspection	Regular replacement
			×1000 km	1	6	12	18	24		
			×1000 miles	0.6	4	8	12	16		
Engine oil	☆	I		R	R	R	R	R	I	★ Annotation 1
Oil filter	☆			R		R		R	I	
Air filter (filter element)	☆☆				I	R	I	R		★ Annotation 2
Engine air inlet filter element	☆☆									Replace every 12000 kilometers
Tire	☆	I			I	I	I	I	I	Check tire pressure and tread wear
Brake fluid level	☆	I			I	I	I	I	I	Replace every 2 years
Internal activity mechanism of the faucet lock	☆	I				I		I		★ Annotation 3
Front shock absorber	☆☆	I				I		I	I	Check for leaks
rear shock absorber	☆☆	I				I		I	I	
V-belt	☆☆					I				Replace every 20000 kilometers
Bolts and nuts in the steering mechanism	☆☆	I		T	T	T	T	T	I	
Secondary water tank level		I		I	I	I	I	I		Replace every 3 years or 30000 kilometers
Brake pad wear		I			I	I	I	I	I	Check for wear and tear
Fuel level		I								
Idle speed		I								start-up check
Shake frame buffer adhesive				I	I	I	I	I		Replace after 30000 kilometers
Main stand	☆				I	I	I	I		Clean and lubricate every 6000 kilometers
Exhuast	☆				I	I	I	I	I	★ Annotation 4
Free angle of throttle grip	☆				I	I	I	I		Free angle: 2.0-4.0mm
Gearbox oil	☆				R		R			★ Annotation 5
Drive wheel, driven wheel	☆					I		I		★ Annotations 6-7
Fuel line	☆				I	I	I	I		Check for leaks
Bearings in the steering mechanism	☆☆				I	I	I	I	I	15000 kilometers to replenish butter
Vehicle fasteners, bolts, nuts	☆☆			T	T	T	T	T		
Wheel, axle sleeve and oil seal of rear rocker arm	☆☆				I	I	I	I	I	Check for wear and tear
Spark plug	☆☆					I		R		
Brake hose	☆☆					I		I	I	
Valve clearance	☆☆		Check and adjust every 6000km							★ Annotation 8
Air filter oil accumulation pipe				I	I	I	I	I		
Radiator pipe				I	I	I	I			
Braking system						I		I	I	Check the oil level in the cup and ensure that the caliper is floating
Electronic seat cushion lock, electronic fuel tank lock										Clean and lubricate every 6000 kilometers

☆This service is provided by dealers or qualified repair units, and if the owner has suitable tools, service information, and a certain understanding of the machinery, they can implement it themselves.

☆☆For safety reasons, such projects should be provided by dealers or qualified repair units.

★Note 1: The first maintenance should be carried out after 1000 kilometers (621 miles) or 3 months (whichever comes first), and the second maintenance should be carried out when the actual mileage of the instrument reaches 6000 kilometers (3728 miles).

Regular maintenance should be carried out every 6000 kilometers (3728 miles) or 15 months (whichever comes first) thereafter.

★Note 2: When driving in harsh conditions such as humidity or dust, in order to ensure the reliability and service life of the vehicle, it is necessary to significantly strengthen preventive maintenance efforts and shorten routine maintenance intervals.

★Note 3: Check, clean, lubricate, and maintain every 10000 kilometers (6000 miles). For detailed maintenance operations, please refer to the official website's "Dragon Lock Maintenance Video".

★Note 4: If the motorcycle is hit or scratched by external force while reversing, the appearance, installation point firmness, and whether the muffler buffer rubber is deformed should be carefully checked first, and whether there is any air leakage after the engine idles. Internal abnormal noise or severe appearance damage usually require replacement, and the suspension ears, brackets, buffer rubber, bolts, and damaged parts involved must be replaced before continuing to ride.

★Note 5: Change the gearbox oil for the first time at 6000 kilometers (3128 miles), for the second time at 18000 kilometers (11185 miles), and thereafter every 12000 kilometers (7456 miles).

★Note 6: It is recommended to use Shell Jiadu S3 V220 C2 extreme pressure grease or high-temperature resistant No.2 grease of the same viscosity every 10000 kilometers (6214 miles) for maintenance and lubrication of the driving and driven wheel bushings to ensure riding comfort. Transmission system: If there is a significant decrease in driving speed, it is recommended to maintain and inspect the CVT transmission system at any time, and replace it in advance if necessary.

★Note 7: The warranty for CVT system failure caused by quality issues of parts is 1 year or 6000 kilometers, and any warranty beyond one of them will be invalid. The normal wear and tear of parts generated during vehicle use is not within the scope of the three guarantees, and sensory phenomena that do not affect mechanical performance, such as sound and vibration, are not within the scope of the three guarantees.

★Note 8: Valve clearance (engine cooling state) inlet: 0.08-0.12mm, exhaust: 0.18-0.22mm.

⚠ DANGER

●Initial maintenance should be strictly carried out in accordance with the above table; otherwise, it may cause vehicle damage or other unforeseeable malfunctions.

●To keep your vehicle running normally, it is recommended that services be provided by dealers or qualified maintenance units. Improper maintenance or servicing may cause vehicle damage or other unforeseeable malfunctions.

●Using substandard parts will accelerate the wear of your vehicle and shorten its service life.

●When checking items such as brake discs, mufflers, spark plugs, and coolant, wait until they have cooled down before proceeding.

●When replacing brake fluid and coolant, take precautions to avoid contact with skin and eyes to prevent injury. At the same time, be careful not to let it drip onto the surface of components to avoid damaging the paint or surface.

⚠ CAUTION

●Waste materials generated during maintenance and servicing, such as cleaning agents and used engine oil, should be properly disposed of. It is strictly prohibited to dump them at will to prevent environmental pollution.

●The items listed above are for regular environmental usage. If the equipment is frequently used in harsh conditions, the frequency of maintenance and servicing should be increased.

●The steering system, braking system, electronic fuel injection system, shock absorbers and wheels are all critical components. It is recommended that they be serviced by qualified maintenance units.

175T-V Maintenance cycle table

I:Check (if necessary, clean, lubricate, adjust or replace) **R**: Replace **T**: Tighten ★: Annotation

Item		Inspection before driving	Rate*1						Annual inspection	Regular replacement
			×1000 km	1	5	10	15	20		
			×1000 miles	0.6	3.1	6.2	9.3	12		
Engine oil	☆	I		R	R	R	R	R	I	★ Annotation 1
Oil filter	☆			R		R		R	I	
Air filter (filter element)	☆☆				I	R	I	R		★ Annotation 2
Engine air inlet filter element	☆☆									Replace every 10000 kilometers
Tire	☆	I			I	I	I	I	I	Check tire pressure and tread wear
Brake fluid level	☆	I			I	I	I	I	I	Replace every 2 years
Internal activity mechanism of the faucet lock	☆	I				I		I		★ Annotation 3
Front shock absorber	☆☆	I				I		I	I	Check for leaks
rear shock absorber	☆☆	I				I		I	I	
V-belt	☆☆					I				Replace every 20000 kilometers
Bolts and nuts in the steering mechanism	☆☆	I		T	T	T	T	T	I	
Secondary water tank level		I		I	I	I	I	I		Replace every 3 years or 30000 kilometers
Brake pad wear		I			I	I	I	I	I	Check for wear and tear
Fuel level		I								
Idle speed		I								start-up check
Shake frame buffer adhesive				I	I	I	I	I		Replace after 30000 kilometers
Main stand	☆				I	I	I	I		Clean and lubricate every 6000 kilometers
Exhuast	☆				I	I	I	I	I	★ Annotation 4
Free angle of throttle grip	☆				I	I	I	I		Free angle: 2.0-4.0mm
Gearbox oil	☆				R		R			★ Annotation 5
Drive wheel, driven wheel	☆					I		I		★ Annotations 6-7
Fuel line	☆				I	I	I	I		Check for leaks
Bearings in the steering mechanism	☆☆				I	I	I	I	I	10000 kilometers to replenish butter
Vehicle fasteners, bolts, nuts	☆☆			T	T	T	T	T		
Wheel, axle sleeve and oil seal of rear rocker arm	☆☆				I	I	I	I	I	Check for wear and tear
Spark plug	☆☆					I		R		
Brake hose	☆☆					I		I	I	
Valve clearance	☆☆		Check and adjust every 10000km							★ Annotation 8
Air filter oil accumulation pipe				I	I	I	I	I		
Radiator pipe				I	I	I	I			
Braking system						I		I	I	Check the oil level in the cup and ensure that the caliper is floating
Electronic seat cushion lock, electronic fuel tank lock										Clean and lubricate every 6000 kilometers

☆This service is provided by dealers or qualified repair units, and if the owner has suitable tools, service information, and a certain understanding of the machinery, they can implement it themselves.

☆☆For safety reasons, such projects should be provided by dealers or qualified repair units.

★Note 1: The first maintenance should be carried out after 1000 kilometers (621 miles) or 3 months (whichever comes first), and the second maintenance should be carried out when the actual mileage of the instrument reaches 6000 kilometers (3728 miles). Regular maintenance should be carried out every 6000 kilometers (3728 miles) or 15 months (whichever comes first) thereafter.

★Note 2: When driving in harsh conditions such as humidity or dust, in order to ensure the reliability and service life of the vehicle, it is necessary to significantly strengthen preventive maintenance efforts and shorten routine maintenance intervals.

★Note 3: Check, clean, lubricate, and maintain every 10000 kilometers (6000 miles). For detailed maintenance operations, please refer to the official website's "Dragon Lock Maintenance Video".

★Note 4: If the motorcycle is hit or scratched by external force while reversing, the appearance, installation point firmness, and whether the muffler buffer rubber is deformed should be carefully checked first, and whether there is any air leakage after the engine idles. Internal abnormal noise or severe appearance damage usually require replacement, and the suspension ears, brackets, buffer rubber, bolts, and damaged parts involved must be replaced before continuing to ride.

★Note 5: Change the gearbox oil for the first time at 5000 kilometers (3107 miles), for the second time at 15000 kilometers (9300 miles), and thereafter every 10000 kilometers (6214 miles).

★Note 6: It is recommended to use Shell Jiadu S3 V220 C2 extreme pressure grease or high-temperature resistant No.2 grease of the same viscosity every 10000 kilometers (6214 miles) for maintenance and lubrication of the driving and driven wheel bushings to ensure riding comfort. Transmission system: If there is a significant decrease in driving speed, it is recommended to maintain and inspect the CVT transmission system at any time, and replace it in advance if necessary.

★Note 7: The warranty for CVT system failure caused by quality issues of parts is 1 year or 6000 kilometers, and any warranty beyond one of them will be invalid. The normal wear and tear of parts generated during vehicle use is not within the scope of the three guarantees, and sensory phenomena that do not affect mechanical performance, such as sound and vibration, are not within the scope of the three guarantees.

★Note 8: Valve clearance (engine cooling state) inlet: 0.08-0.12mm, exhaust: 0.18-0.22mm.

⚠DANGER

●Initial maintenance should be strictly carried out in accordance with the above table; otherwise, it may cause vehicle damage or other unforeseeable malfunctions.
●To keep your vehicle running normally, it is recommended that services be provided by dealers or qualified maintenance units. Improper maintenance or servicing may cause vehicle damage or other unforeseeable malfunctions.
●Using substandard parts will accelerate the wear of your vehicle and shorten its service life.
●When checking items such as brake discs, mufflers, spark plugs, and coolant, wait until they have cooled down before proceeding.
●When replacing brake fluid and coolant, take precautions to avoid contact with skin and eyes to prevent injury. At the same time, be careful not to let it drip onto the surface of components to avoid damaging the paint or surface.

⚠CAUTION

●Waste materials generated during maintenance and servicing, such as cleaning agents and used engine oil, should be properly disposed of. It is strictly prohibited to dump them at will to prevent environmental pollution.
●The items listed above are for regular environmental usage. If the equipment is frequently used in harsh conditions, the frequency of maintenance and servicing should be increased.
●The steering system, braking system, electronic fuel injection system, shock absorbers and wheels are all critical components. It is recommended that they be serviced by qualified maintenance units.

125/150V Air filter (filter element) , air inlet filter element

Steps:

1.Support the vehicle firmly

Support the vehicle with the main bracket as shown in the figure.

2.Replace the air inlet filter

a. Use an 8 # socket or T30 ring wrench to remove the two bolts, use a T30 ring wrench to press down the central cylindrical pin of the expansion nail above the air filter decorative cover, and then remove the expansion nail.

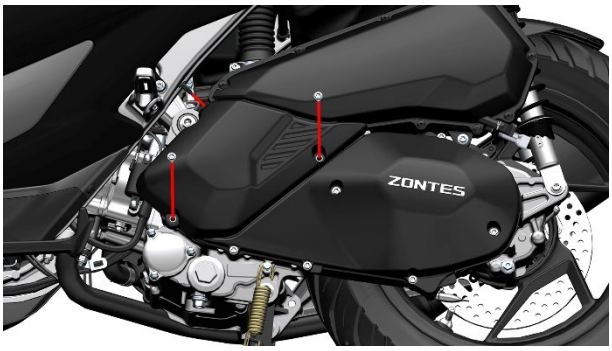

b.Use a T30 box spanner to remove the 4 M6 × 16 hexagonal flange internal Phillips bolts as shown in the diagram, and remove the air inlet filter assembly. Use a Phillips screwdriver to remove the 3 screws on the housing

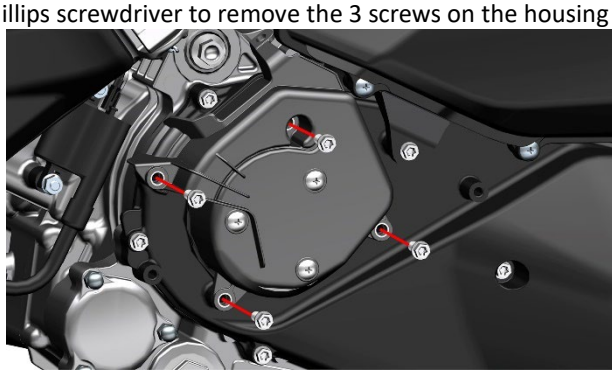

c.Flip over to the back, remove the filter holder, and take out the filter element. Replace the filter element with a new one and restore it according to the disassembly steps. Be careful not to damage the filter element, and check whether the sealing ring is aged, cracked, etc.

3.Replace the air filter element

a. Use a Phillips screwdriver to remove 10 self tapping screws. Remove the air filter housing. Check whether the sealing ring is aged, cracked, etc.

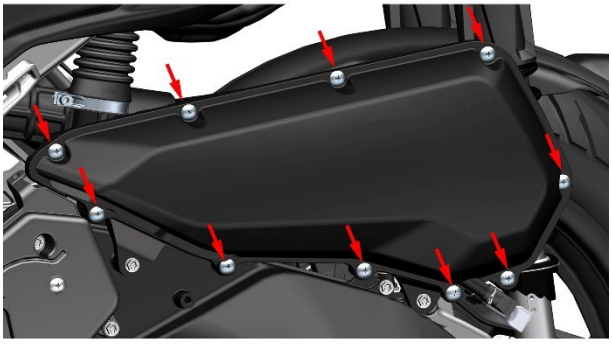

b. After removing the self tapping screws with a Phillips screwdriver, remove the filter assembly. Check whether the sealing ring is aged, cracked, etc.

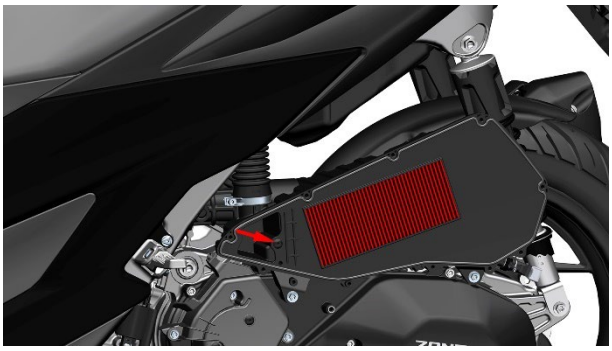

c. Use a dust blower to clean the dust on the inside of the intake pipe, and then wipe the inner wall clean with a clean non-woven fabric.

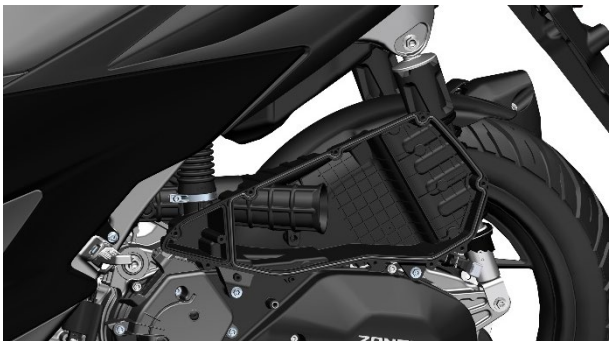

d.Observe whether the waste oil drainage pipe has accumulated dirt or water. If there is, use pliers to remove the waste oil pipe clamp ① and pull out the black plug. After draining the waste oil or sewage, reinstall it. Pay attention to increasing the frequency of inspections appropriately when the air humidity is high. If there is too much dirt in the hose, it is necessary to check whether there is too much dirt or damage in the air filter element, and replace the air filter element if necessary.

e. Replace the filter element and sealing strip with new ones. Follow the disassembly steps to restore.

DANGER

●The vehicle must be parked on a flat, stable surface or on a lift platform.

WARNING

●Inspect the air filter cartridge every 6,000 kilometers (3,728 miles) or 15 months (whichever comes first), and replace it every 12,000 kilometers (7,456 miles) or 30 months (whichever comes first). Replace the air inlet sponge filter cartridge every 12,000 kilometers (7,456 miles).
●The air filter element and engine air intake filter element should be cleaned regularly according to the schedule of regular maintenance and lubrication.
●If you frequently ride in damp or dusty areas, you should

check the air filter element more often. Be sure to check the air filter drain line regularly.

●If the filter element is damaged, it must be replaced; otherwise , dirt will be directed into the engine, causing engine damage.

●Ensure the filter element is properly installed.

CAUTION

●If the air filter is clogged with dust, it will increase intake resistance and reduce output power.

●If the engine air intake filter is clogged with dust, the intake resistance will increase, which will reduce the heat dissipation of the belt and affect the belt's lifespan.

● If it is not yet time to replace the filter, and the filter is undamaged and the surface is relatively clean , you can use a blower to blow air from the clean side of the filter to remove the dust from the surface .

●Do not allow water to enter the air filter when washing the vehicle .

175V Air filter (filter element) , air inlet filter element

1.Support the vehicle firmly

Support the vehicle with the main bracket as shown in the figure.

2.Replace the air inlet filter

a. Use an 8# socket or T30 Torx wrench to remove the two bolts, press down the central cylindrical pin of the expansion stud on the upper part of the air filter decorative cover with a T30 Torx wrench, and then remove the expansion nail.

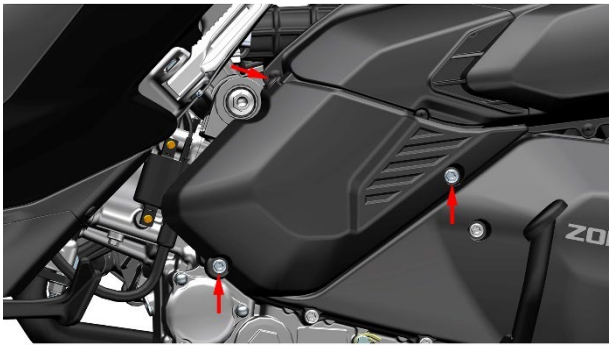

b. Use a T30 Torx wrench to remove the 4 M6×16 hexagon small flange Torx screws as shown in the diagram, then take out the air inlet filter element assembly. Use a Phillips screwdriver to remove the 3 screws on the housing.

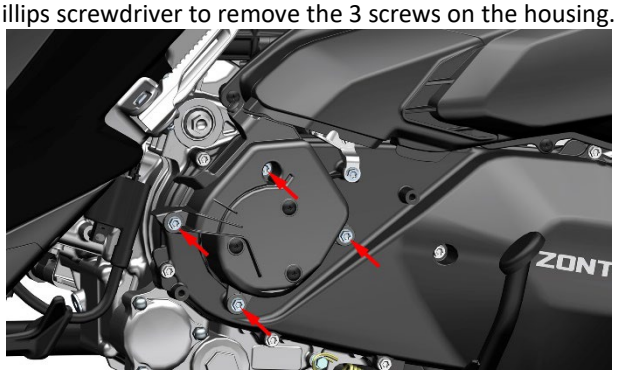

c. Flip the unit over to the back, remove the filter cartridge holder and then take out the filter cartridge. After replacing with a new filter cartridge, reassemble by following the disassembly steps. Note that the filter cartridge must not be damaged, and check whether the sealing ring shows signs of aging, cracking, etc.

3.Replace the air filter element

a. Use a Phillips screwdriver to remove the 8 self-tapping screws, then take off the air filter housing, and check whether the sealing ring shows signs of aging, cracking or other issues.

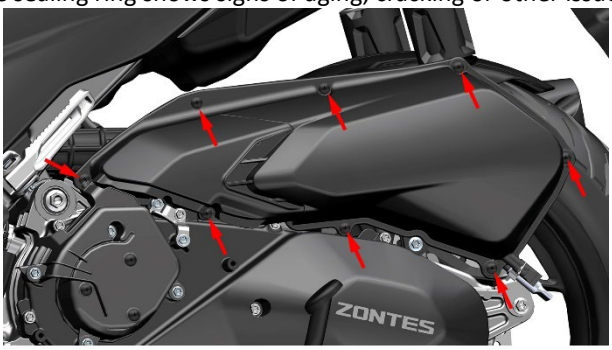

b. Remove the self-tapping screws with a Phillips screwdriver, then take out the filter element assembly. Inspect the sealing ring for signs of aging, cracking, etc.

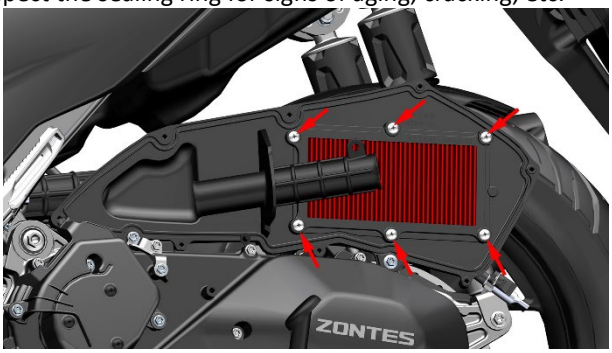

c. Use an air blow gun to blow away the dust on the inner side of the intake pipe, then wipe the inner wall clean with a clean non-woven fabric.

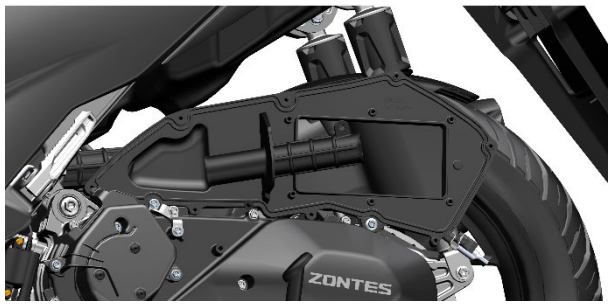

d. Check whether there is accumulated dirt or water in the waste oil drain pipe. If any, use pliers to remove the clamp or retaining ring of the waste oil pipe, then pull out the

plug, drain all the waste oil or sewage, and reinstall it. Note that appropriately increase the inspection frequency when the air humidity is high. If there is excessive dirt inside the hose, be sure to check whether there is excessive dirt or damage inside the air filter element, and replace the air filter element if necessary.

e. Replace the new filter element and sealing strip. Restore according to the disassembly steps.

DANGER

●The vehicle must be parked on a flat, stable surface or on a lift platform.

WARNING

●Inspect the air filter cartridge every 6,000 kilometers (3,728 miles) or 15 months (whichever comes first), and replace it every 12,000 kilometers (7,456 miles) or 30 months (whichever comes first). Replace the air inlet sponge filter cartridge every 12,000 kilometers (7,456 miles).
●The air filter element and engine air intake filter element should be cleaned regularly according to the schedule of regular maintenance and lubrication.
●If you frequently ride in damp or dusty areas, you should check the air filter element more often. Be sure to check the air filter drain line regularly.
●If the filter element is damaged, it must be replaced; otherwise , dirt will be directed into the engine, causing engine damage.
●Ensure the filter element is properly installed.

CAUTION

●If the air filter is clogged with dust, it will increase intake resistance and reduce output power.
●If the engine air intake filter is clogged with dust, the intake resistance will increase, which will reduce the heat dissipation of the belt and affect the belt's lifespan.
● If it is not yet time to replace the filter, and the filter is undamaged and the surface is relatively clean , you can use a blower to blow air from the clean side of the filter to remove the dust from the surface .
●Do not allow water to enter the air filter when washing the vehicle .

Muffler bolts and nuts

Check for any air leakage at the exhaust port of the engine

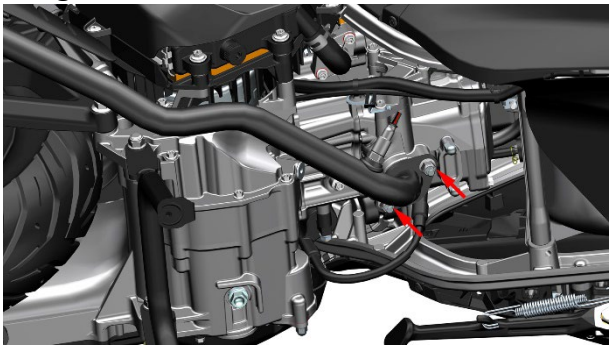

a. If there is a slight leak, try tightening the exhaust port nut with a 12# socket wrench first ; if the problem is not resolved, the muffler needs to be removed and a new engine exhaust port gasket replaced . The nut torque standard is 25 N.m (2.6 kgf.m, 18 lbf.ft).

b. If there are no signs of air leakage, use a 12# socket to check if the M8 nut at the engine exhaust port is loose.

c. If necessary, remove the muffler's heat shield .

The four M6×20 bolts on the muffler using a T25 plum blossom internal hexagonal wrench . Remove the front and rear heat shields .

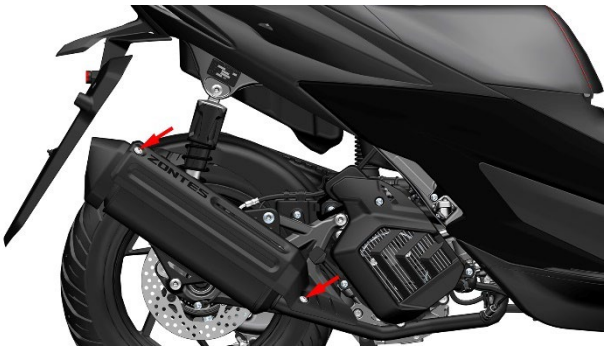

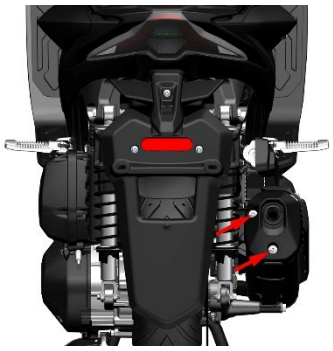

Check the looseness of the silencer bolts and nuts, and inspect the aging and cracking of the heat-resistant board buffer gel

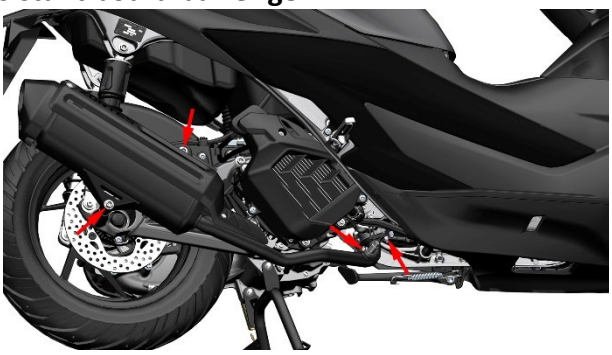

Remove the muffler assembly

Pull the clamp upwards along the oxygen sensor wiring harness and find the plug. Push the plug upwards to push it out of the connector clip, then pull it down to remove the oxygen sensor plug.

Use a 12# socket to remove the two M8 nuts at the engine exhaust port. For 125&150V models, support the muffler assembly, then use a 13# socket to remove the two bolts on the rear cylinder before taking out the muffler assembly; for the upper part of 175V models, a 13# socket is used, for the bottom part, 14# socket applies to vehicles manufactured before October 19,2026, while 13# socket is used for some vehicles produced on that day and subsequent ones. The torque specification for the 2 nuts is 25N.m (2.6 kgf.m, 18 lbf.ft). The torque specification for the 2 bolts is 53N.m (5.4 kgf.m, 39 lbf.ft).

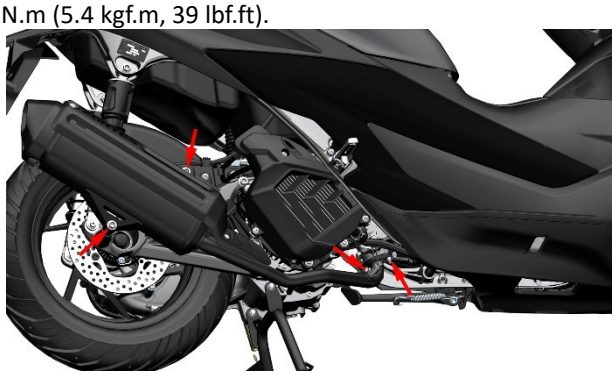

If the oxygen sensor needs to be removed, use a 16# open-end wrench. Torque: 18±2 N.m.

DANGER

●Do not touch any metal surfaces of the muffler while the engine is running or after riding to prevent burns.
●The vehicle must be parked on a flat, stable surface or on a lift platform.
●If a new exhaust port gasket needs to be replaced, operation can only begin after the muffler has completely cooled down.

WARNING

●Do not rev the engine for an extended period of time while stationary.
●Driving at low speed for extended periods under heavy load can damage the engine and muffler.
●Leaded gasoline is prohibited, as it may cause catalytic failure and loss of exhaust gas purification capabilities.

CAUTION

●If you need to remove the muffler for other operations, it is recommended to cover the air inlet and outlet of the muffler with masking tape to prevent foreign objects from entering.

●Keep the drain hole at the bottom of the muffler clear to prevent condensation from accumulating inside the muffler cavity .

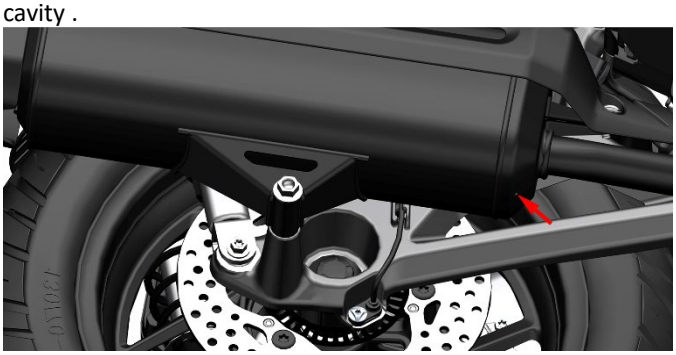

●Oil stains, dirt, and other contaminants on the surface of the muffler should be promptly cleaned up.

Engine oil

DANGER

●The vehicle must be parked on a flat, stable surface or on a lift platform.
●Operation can only be performed after the engine and muffler have cooled down.
●When adding engine oil , prevent it from dripping onto the muffler surface.
●Keep engine oil away from children and pets. Short-term contact with engine oil may irritate the skin. Please wear long-sleeved clothing or sleeves and protective gloves before changing the oil . If you accidentally get engine oil on your skin, clean it thoroughly with soap and water .
●Used engine oil must be collected and handed over to a professional organization for proper disposal. It is forbidden to dump it at will, pour it into a trash can , or pour it directly onto the ground .

WARNING

●The engine oil and gearbox oil should be changed according to the cycle schedule specified in the instruction manual.
●You need to buy regular and qualified engine oil. Inferior engine oil will accelerate engine wear and may even cause engine failure and shorten its service life.
●The engine oil level should meet the requirements; too much or too little oil may damage the engine.

CAUTION

●Both the copper gasket and the combined sealing gasket need to be replaced after disassembly; it is recommended that both the O-ring and the sealing gasket be replaced .
●The O-ring must be properly assembled to avoid cutting edges .
●After removing the dipstick and filler cap, prevent foreign objects from falling into the engine.

1.Drain the engine oil

a. Start the vehicle and let it idle for 3-5 minutes , then turn it off for 3-5 minutes (when the temperature is below 10℃ (50 F) , the idling time should be extended appropriately) .

b. Secure the vehicle using the main support frame.

c. Rotate the oil dipstick (1) on the right side of the engine counterclockwise to remove the oil dipstick (1) and O-ring (2). Leave the oil dipstick resting on the filler neck to prevent foreign objects from falling into the engine.

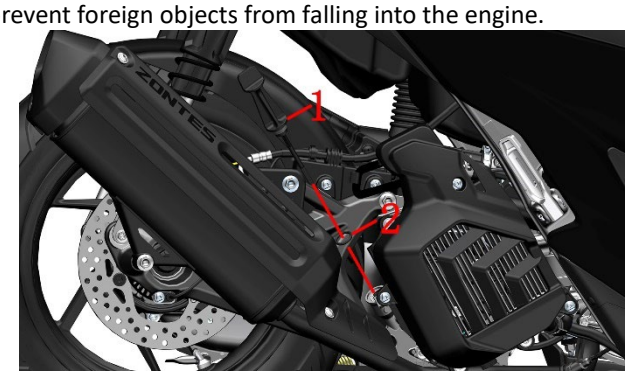

d. After placing the oil drain pan under the drain bolt , use a #14 sleeve to remove the M12×1.5×15 drain bolt ((3)) and the 12×ϕ20×2 combined sealing gasket ((4)) .

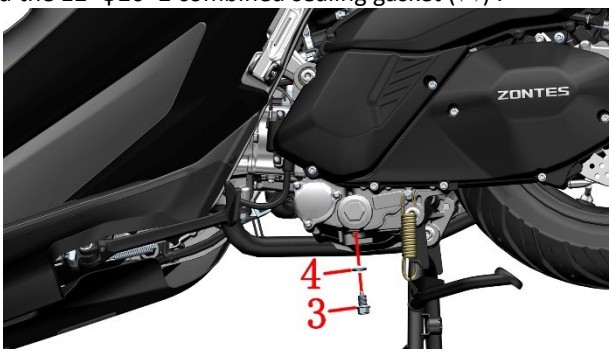

e. Wipe the mating surfaces clean with a non-woven cloth . Check the mating surfaces of the drain bolt (3) for scratches ; if any are found, replace it with a new one ; otherwise , wipe it clean .

f. Replace the new combination gasket (4) , and use a # 14 socket to reinstall the drain plug (3) and combination gasket (4) back onto the engine block . Torque : 25 N.m (2.6 kgf.m , 18 lbf . ft).

2.Replace the fine filter

a. Place an oil collection tray under the filter cover. Use a 10# socket wrench to remove the three cap nuts counterclockwise. Gently rotate the filter cover left and right. Do not use hard objects to pry up the filter cover, as this will damage the mating surfaces and cause leaks. Remove the filter cover and O-ring. After removing the spring, remove the filter assembly and gasket.

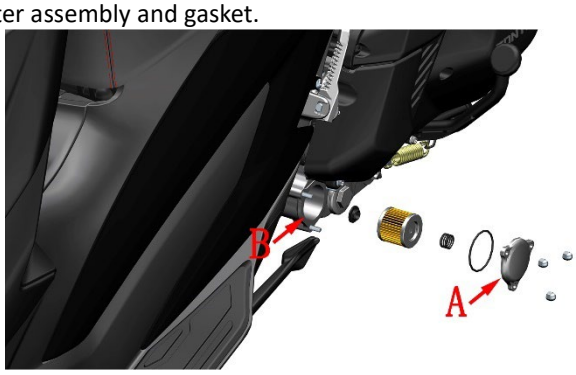

b. Wipe the engine clean with a clean non-woven cloth to remove any residual oil and impurities.

c. Replace the gasket, fine filter, and O-ring.

d. Align the filter cover with the screw hole and gently press it into the mounting hole in parallel. Hold the filter cover with your hand and pre-tighten the three cap nuts so that the end face (A side) of the filter cover is flush with the end face (B side) of the housing and no longer bounces up. Then tighten the three cap nuts evenly. The standard torque is 10±1 N.m.

Note that the sealing ring must not be omitted , and the surface of the sealing ring must be checked for defects such as damage or hardening before assembly .

3.Add engine oil

a. When changing the filter, use a measuring cup to dispense 0.87L (0.92 US qt, 0.76 lmp qt, 0.23 US gal, 0.19 lmp gal) of new API SN grade or higher motorcycle engine oil with a viscosity of SN5W-40. If not changing the filter, use a measuring cup to dispense 0.8L (0.85 US qt, 0.7 lmp qt, 0.21 US gal, 0.18 lmp gal).

b. After removing the dipstick, use a funnel and measuring cup to add engine oil to the filler neck on the right crankcase cover of the engine .

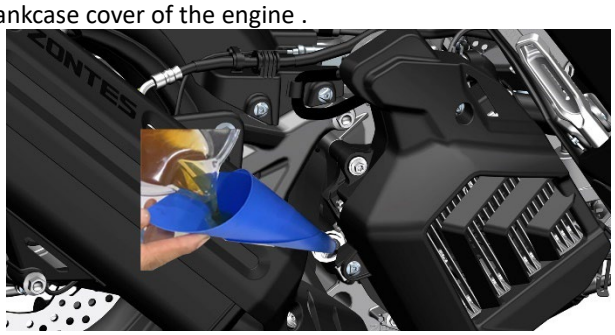

c. Wipe the oil filler cap clean with a non-woven cloth .

d. Check the O-ring (2) for damage or aging. If not, wipe it clean; if so, replace it. The O-ring specification used on the oil dipstick is 18×3×3.5.

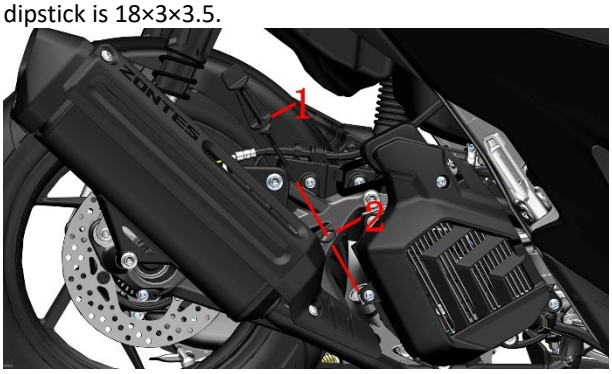

e. Wipe the oil dipstick clean, and rotate it clockwise by hand to reinstall the oil dipstick (1) and O-ring (2) back onto the right crankcase cover of the engine.

4.Replace gearbox oil

a. Rotate the filler cap nut (1) counterclockwise and remove the nut (1) and O-ring (2) . The O-ring used for the filler cap nut is 13.8×2.5. Leave the nut (1) on the filler cap to prevent foreign objects from falling into the engine.

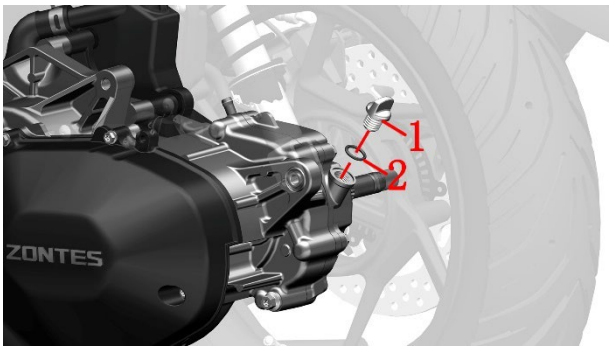

b. Place an oil drain pan under the rear of the left engine. Use a 10# socket to loosen the drain plug (3) counterclockwise .

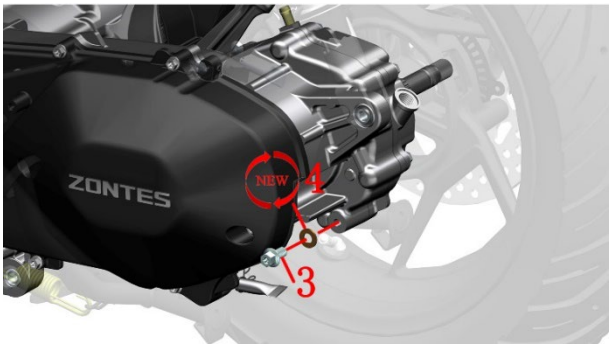

c. Remove the M8× 16 drain plug ((3)) and the 8.3×16×1.5 copper washer ((4)) .

d. After the gearbox oil has been completely drained, wipe the surface of the drain port clean with a non-woven cloth .

e. Replace with a new copper washer (4), check the mating surface of the drain bolt (3) for scratches. If not, wipe it clean and reinstall in sequence. Torque : 20 Nm (2 kgf.m , 15 lbf.ft) .

f. Use a measuring cup to dispense 0.12L of gearbox oil (0.13 US qt, 0.11 lmp qt, 0.03 US gal, 0.03 lmp gal).

g . Check the O-ring (4) for damage or aging. If not, wipe it clean; if so, replace it.

h. Wipe the nut (3) and the oil filler port clean with a non-woven cloth . First, put the O-ring (4) onto the nut (3), and then rotate it clockwise by hand to put it back into the gearbox oil filler port.

5. Confirm the oil level

a. After starting the vehicle and letting it idle for a few minutes , check all disassembled areas for leaks. If any are found, investigate the cause.

b. After the engine has been idling for 5 minutes , turn it off for 3 minutes and check if the oil level is between the maximum and minimum marks . If not, drain or add oil to the standard level.

Throttle valve body

Caution:

●The throttle body sensor and stepper motor must not be immersed in any liquid.

●Do not adjust the idle speed adjustment screw on the valve body.

1.Clean carbon deposits without removing the throttle valve body

a. During riding, without compromising safety or obeying traffic regulations, appropriately increase the throttle to raise the engine speed to over 7000 RPM and continue riding for at least 2 minutes. High-speed scavenging can effectively remove carbon deposits.

b. Use a qualified fuel additive and add it according to the instructions. Frequent use may damage the fuel supply line.

2.Remove the stepper motor and clean the carbon deposits

a . Follow the steps for removing storage boxes to remove the rear storage box first.

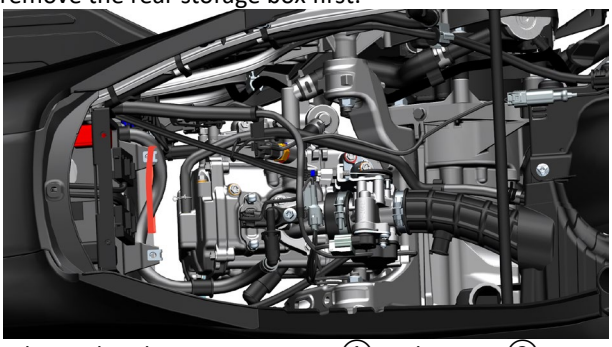

b. Unplug the stepper motor ① and sensor ②.

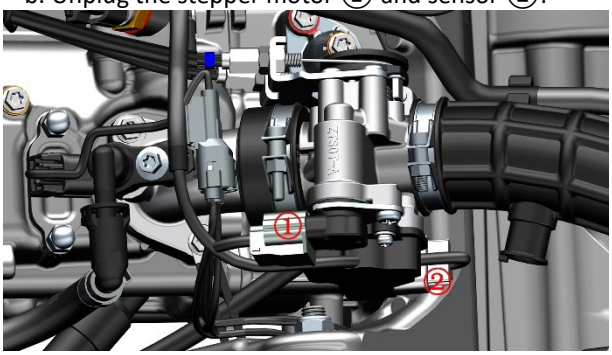

c . Use a short Phillips screwdriver to remove the bolts and anti-loosening clips that come with the throttle body assembly, and then remove the stepper motor. Check the O-rings for aging, cracks, etc. The outer diameter of the O-ring is approximately 19mm, and the wire diameter is 1.8mm; the bolt specification is GB818 M6 ×12, both of which can be purchased from other sources.

d . Clean the carbon deposits on the stepper motor head using a throttle body cleaner. Spray a small amount of cleaner into the valve body orifice. Do not soak the stepper motor in any liquid.

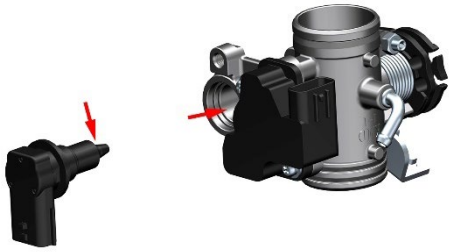

e. Reinstall the stepper motor onto the valve body, ensuring that the sealing ring is not left out. Plug the connector back in.

3.Remove the throttle valve body assembly and clean the carbon deposits

a. Remove the plugs of the stepper motor ① and the sensor②.

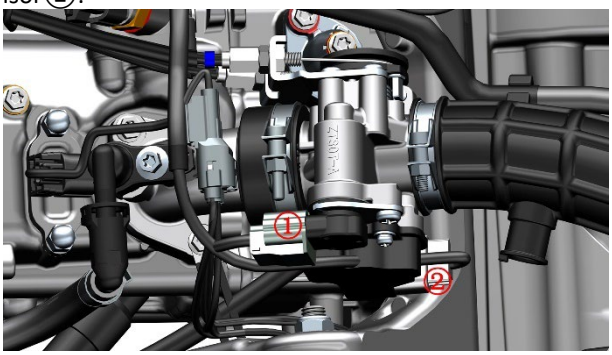

b. Use a #4 hex key to loosen the bolts on the ϕ42×10 hose clamp assembly (1), then pull out the air filter outlet pipe and hose clamp (1) from the throttle body in the direction of the arrow.

Use a #4 hex key to loosen the bolts on the ϕ48×8 hose clamp assembly (2), then pull the throttle body assembly off the intake manifold.

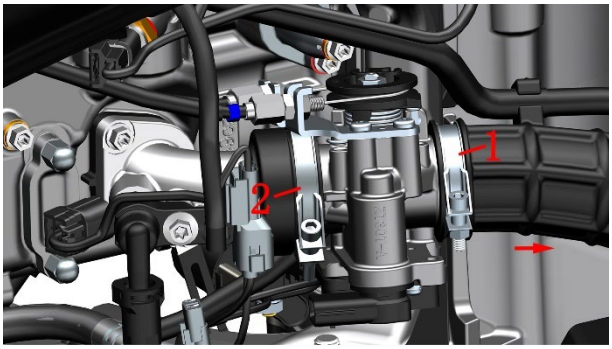

c.Flip the throttle body to its bottom, locate the retaining clip, pinch both ends of the clip with your hands and move it outward, then pull off the detachment tube. First, use a #10 open-end wrench to loosen the nut at arrow a and remove the throttle cable from the bracket. Then, use a #10 open-end wrench to loosen the two nuts at b and remove the throttle cable adjustment tube from the bracket hole. The throttle body can now be removed.

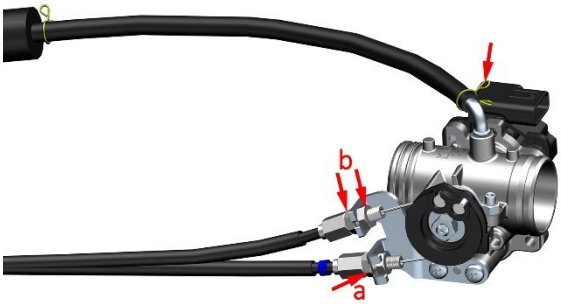

d.Use a throttle body cleaner to remove carbon deposits from the intake manifold and the throttle body air outlet. Do not soak the throttle body assembly or the intake manifold assembly in any liquid.

e. Reinstall all parts in the reverse order of disassembly.

4.Remove the sensor from the throttle valve body

Throttle Body Sensor and Stepper Motor

If you need to remove the sensor and stepper motor, simply use a Phillips screwdriver to remove the screws. Be sure to check the sealing ring for any damage before reassembly; it must not be omitted.

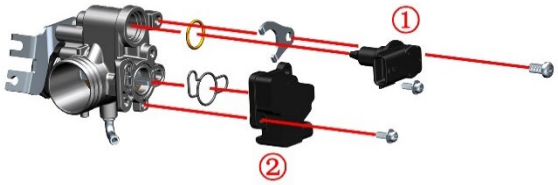

①Stepper motor ②Throttle position sensor

5.Throttle valve body troubleshooting process

Throttle Body Fault Troubleshooting Process

For details, see the throttle body section in the 'Electronic Fuel Injection System'.

DANGER

- Vehicles must be parked on a flat, stable surface or lift.
- Wait until the engine and muffler have cooled before performing any operations.
- When removing high-pressure fuel lines, prevent fuel from dripping onto the parts.
- Smoking, making calls, and similar activities are prohibited in the work area.

WARNING

- When removing the throttle body for carbon cleaning, it should be done in a low-dust or dust-free environment to prevent dust from entering the engine.
- Care should be taken to prevent foreign objects from falling into the engine or air filter.
- If the stepper motor, sensors, or heat insulation pads are removed, ensure that the sealing rings are installed without omission and that they are correctly positioned without any trimming issues.
- Do not use carburetor cleaner or compressed air to clean the throttle body.
- After reinstalling the battery, the electronic fuel injection system needs to be reset. The specific method is as follows: Turn on the ignition switch and the engine kill switch, squeeze the rear brake lever, and start the engine. After 10 seconds, turn off the engine kill switch. After 10 seconds, turn on the engine kill switch and repeat this process 2 more times.

Throttle cable

1.Inspection

a.Check whether the right handlebar grip and throttle cable are damaged.

b. Check whether the right handlebar grip rotates smoothly and can return automatically.

c. Hold the handlebars with both hands and turn them to both sides while simultaneously rotating the right handlebar grip. At each certain turning angle, check whether the throttle can return normally. If it cannot, lubricate the cable or the inside of the right handlebar; or replace the throttle cable or the right handlebar grip with a new one.

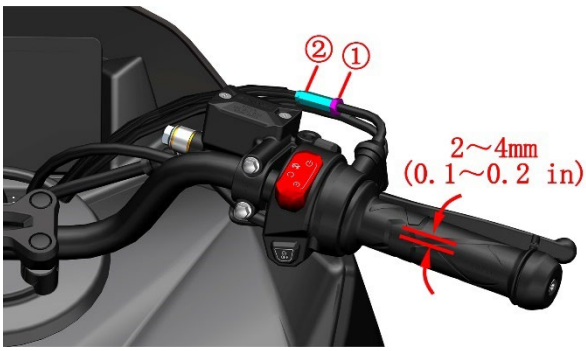

d. After starting the engine, turn the handlebars left and right to ensure the idle speed remains unchanged during steering, then turn off the engine.

e. Turn the right-hand grip cover to check whether the cable gap is 2–4 mm (0.1–0.2 in).

2.Adjust the throttle cable clearance

a.After removing the protective cover, use an #8 open-end wrench to hold the adjusting screw ② in place, then use a #10 open-end wrench to loosen nut ① counterclockwise. Turning the adjusting screw ② clockwise will decrease the free play, while turning it counterclockwise will increase it; adjust the clearance to the specified value. After adjusting the clearance, tighten nut ① and then reinstall the protective cover.

Torque: 3.8 N·m (0.4 kgf·m, 2.8 lbf·ft).

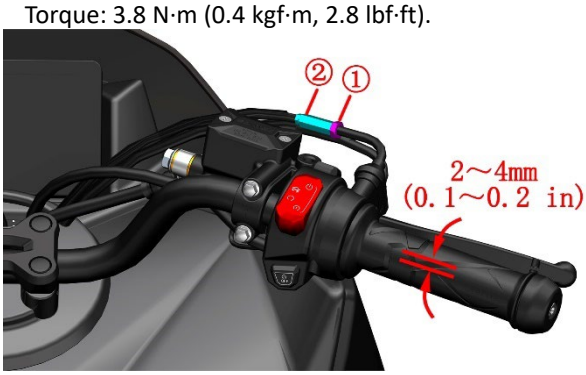

If the above adjustments do not achieve the desired effect, you can refer to the section 'Cleaning carbon deposits from the throttle body assembly' to remove the throttle body assembly. Use a #10 open-end wrench to loosen the two nuts on the bracket for adjustment. Torque: 3.0 N·m (0.3 kgf·m, 2.2 lbf·ft).

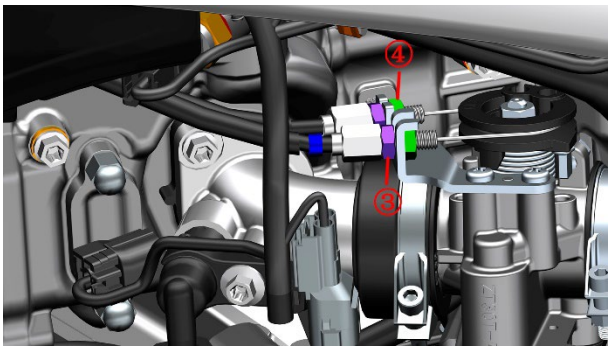

c. If the above two adjustments are ineffective, the throttle cable needs to be replaced.

Idle

Caution：

●Before checking the idle, other engine maintenance items should be inspected and confirmed to be in normal condition.

●Before checking the idle, the following items should be checked:

The maintenance reminder light“🔧” should not be on.

The condition of the spark plugs has been checked.

The air filter element and intake filter element have been checked or replaced.

The throttle free play has been checked.

●The limit screws on the valve body must not be adjusted privately.

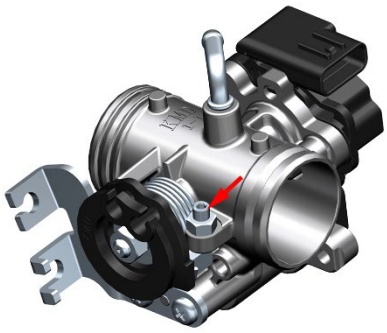

Check the idle speed

The engine's idle speed should be checked when the engine is warm.

The engine's idle speed range should be 1600-1800 RPM.

If the idle speed is not within the standard range or if the engine stalls at idle, it should be inspected and serviced by professional personnel at a Supuls authorized service center or a qualified repair facility.

Abnormal idle or stalling should be checked or repaired according to the troubleshooting procedures in the 'Fuel Injection System' chapter of this manual.

Radiator

DANGER

●The vehicle must be parked on a level, stable surface or lift platform.
●Operations should only be carried out after the engine and muffler have cooled down.
●Swallowing or inhaling coolant can be harmful to the human body.

CAUTION

●Regularly check the coolant level and always keep it above the “L” line.
●It is recommended to replace the coolant every 3 years or 30,000 kilometers (18,641 miles).
●Swallowing or inhaling coolant can be harmful to the human body. After each addition of coolant, wash your hands, face, and any exposed skin thoroughly and promptly. If ingested, contact a poison control center or hospital immediately; if inhaled, move to a well-ventilated area immediately. If it accidentally gets into the eyes, rinse thoroughly with plenty of running water and seek medical attention promptly. Keep out of reach of children and pets.
●Always use engine coolant suitable for aluminum radiators, based on ethylene glycol. Use coolant made by mixing coolant concentrate with distilled water in a certain proportion, suitable for aluminum radiators. If water needs to be added, only distilled water should be used, as other types of water may corrode the engine cooling system or cause more serious consequences.
●Choose antifreeze according to the lowest local temperatures. The vehicle comes from the factory filled with Total -35°C (-31°F) green antifreeze.
●Coolant can damage paint, so be careful when adding it. Any small spills should be wiped off immediately with a clean, soft cloth.

1.Check the coolant

a. Position the vehicle upright and check the coolant level through the mid-right inspection hole with the help of a flashlight to see if the level is between 'H' and 'L'. Make sure the ground is as flat and level as possible; do not check on a slope. The engine should also be cold.

2.Add coolant (antifreeze) to the auxiliary water tank

If the water level in the auxiliary radiator is below the "L" line, an appropriate amount of coolant should be added. If there is no coolant in the auxiliary radiator, first check for any leaks in the cooling system; repairs must be completed before adding coolant.

Remove the floor mat under the right pedal, lift the rubber cap of the auxiliary radiator, and use a funnel to add the appropriate amount of coolant. Position the vehicle upright and use a flashlight to check whether the coolant level in the auxiliary radiator is between the "H" and "L" marks. Make sure the ground is as level as possible, and do not perform this check on a slope. Additionally, the engine should be in a cold state.

3.Add coolant to the main water tank

a. When the engine is cold, lift the side bracket and check to ensure all hoses and clamps are properly installed. Then, use a T25 Torx wrench to remove the two M6×14 shoulder bolts and one M6×12 bolt securing the radiator cover.

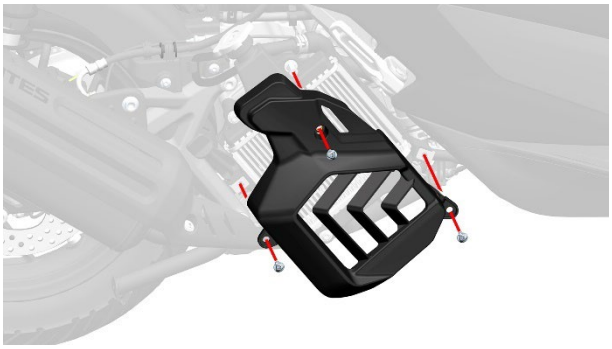

b.Refer to the steps for removing the seat cushion and storage box, and dismantle them first. Use an #8 socket to remove the water pump vent bolt located above the right side of the engine cylinder head.

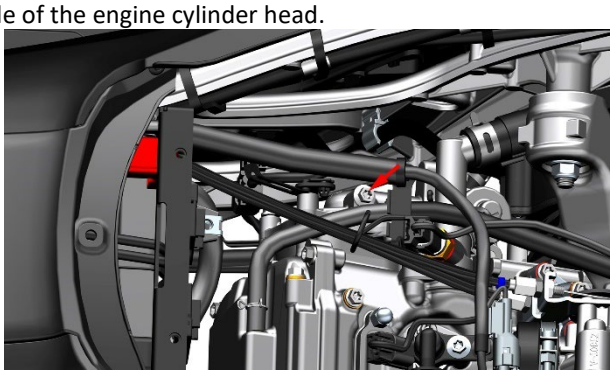

c.Be sure to ensure the engine is cold, and turn the radiator cap counterclockwise to remove it. Do not open the radiator cap when the engine is hot to avoid burns.

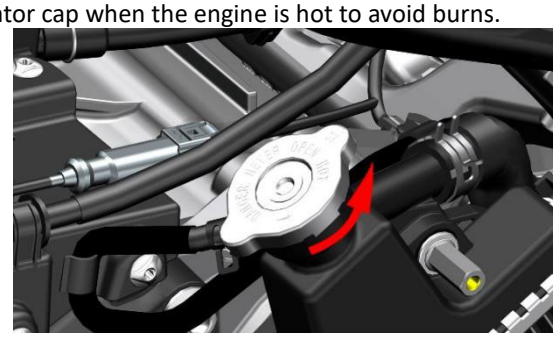

d.Wear waterproof gloves and use an extended funnel to add coolant to the water tank inlet. Continue until coolant overflows steadily from the water pump bleed bolt, and the coolant level is visible at the inlet.

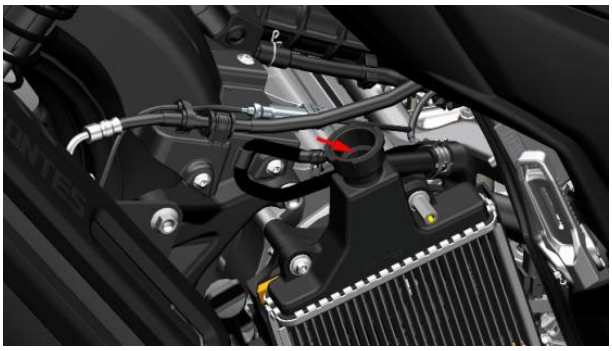

e. Tighten the main water tank filler cap. Tighten the water pump bleed bolt; torque: 10 N·m (1 kgf·m, 7 lbf·ft).

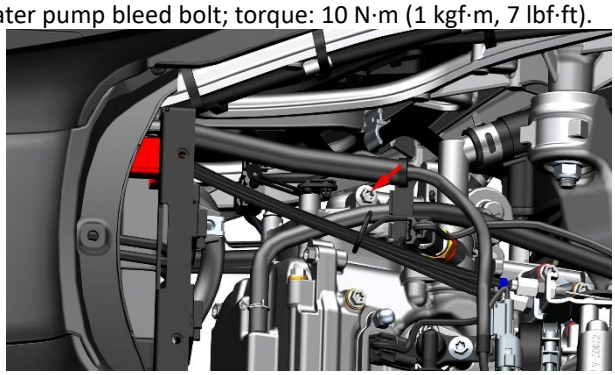

f.Retract the side supports, lift the main support, ignite the engine, and when the water temperature rises to 82°C, increase the throttle to 4000-5000 RPM for about 10 seconds, then release the throttle and stop for 5 seconds. Repeat a few times, observing that the instrument shows the water temperature fluctuating between 80–86°C. Touch the lower part of the radiator by hand; if it is hot, add water to complete the process. Turn off the engine and wait for the coolant temperature to drop below 60°C before opening the fill port. If the coolant level has dropped, refill it to the top of the fill port.

g.Reassemble all the parts that were removed.

4.Release coolant

a. Place an oil pan underneath, wear waterproof gloves, and then use an #8 socket to remove the M6×12 drain bolt and the ϕ5.6×ϕ1 O-ring.

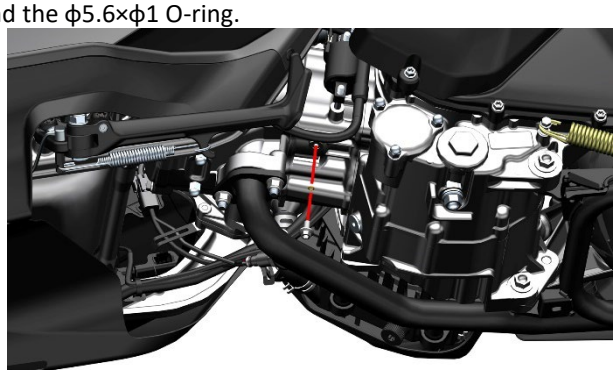

b.Remove the cap of the main water tank to speed up the outflow of coolant.

c. Wipe all mating surfaces clean with a non-woven cloth, and check for scratches on the bolt mating surfaces; if any, replace with new ones. The O-ring must be replaced every time it is disassembled.

d. First, fit the new O-ring onto the bolt, being careful not to damage the O-ring. Bolt torque: 8–10 N·m (0.8–1 kgf·m, 6–7 lbf·ft).

5.Check whether the fins of the radiator tank are deformed or the air duct is blocked

Check whether the fins of the radiator tank are deformed or if the airflow passage is blocked. Use compressed air, a low-pressure water gun, brushes, or other tools to remove dirt, insects, and other debris from the surface of the radiator. When using compressed air, be careful not to get too close to the fins. Do not use a high-pressure water gun to wash the radiator directly, as this may deform the fins and block the airflow passage.

6.Check all water pipes for leaks and signs of aging.

1-Main water tank filler neck 2-Main water tank 3-Auxiliary water tank 4-Main water tank outlet pipe
5-Aluminum water pipe 6-Engine water pipe 7-Water pump cover inlet pipe 8-Water pump cover assembly
9-Thermostat assembly 10-Thermostat outlet pipe 11-Main water tank inlet pipe

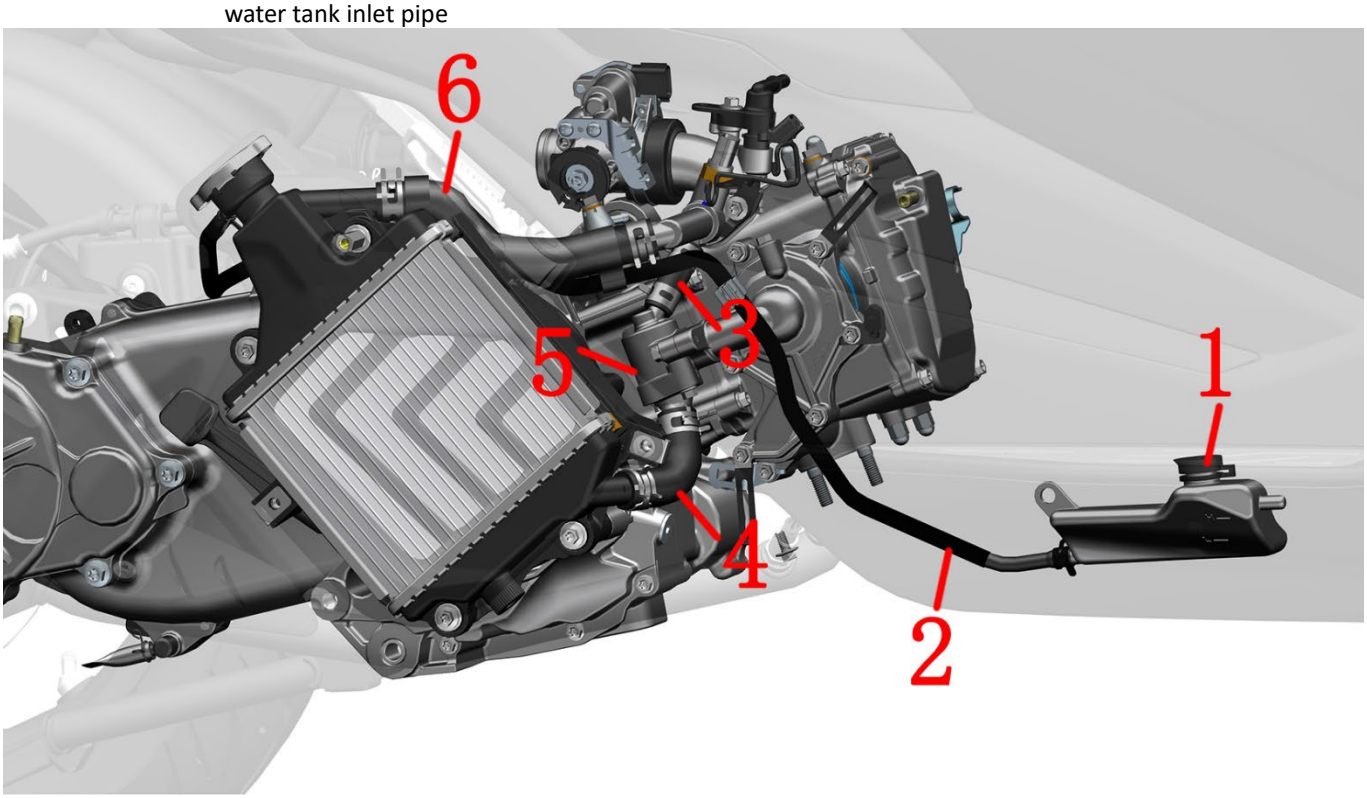

1-Auxiliary water tank; 2-Auxiliary water tank connecting pipe; 3-Thermostat small circulation pipe;
4-Water tank outlet pipe;5-Thermostat; 6-Water tank inlet pipe

Fuel pipe

Caution：

●When disassembling the high-pressure fuel pipe, a small amount of fuel may leak out, which should be collected using an oil catcher.

●The operation should be carried out in an open and well-ventilated place. Smoking, making or receiving mobile phones, and any other activities that may cause sparks are prohibited at the work site.

1.Use an endoscope with an LED light to check for fuel line leaks.

The image above is a schematic diagram of an endoscope with an LED sensor. This image is from the internet, and copyright belongs to the original author. Please do not use it for other purposes.

2.Replace high pressure fuel pipe

a. First, remove the rear storage compartment as shown in the picture below, following the steps for removing the rear storage compartment.

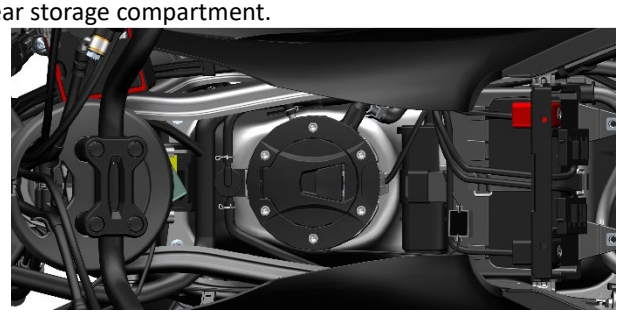

b. After pressing the anti-disengagement latch at the fuel injector, pull out the high-pressure fuel line in the direction of the large arrow.

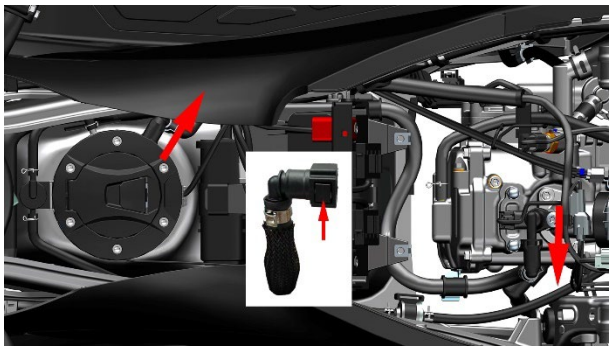

c. After replacing the high-pressure fuel pipe, restore it according to the disassembly steps.

3. Fuel pump

3.1 Use a fuel pressure gauge to measure fuel pressure

Follow the steps above to disconnect the high-pressure fuel tube from the fuel injector. Connect the original high-pressure fuel tube to a pressure gauge, and then find another high-pressure fuel tube to connect the pressure gauge and the fuel injector.

Start the vehicle and let the engine idle, then measure the fuel pressure.

The standard pressure for 125V is 250±10kPa (2.55±0.1 Kgf/cm2,36.25±1.45 psi). The standard pressure for 150V is 300±10kPa (3.06±0.1 Kgf/cm2,43.5±1.45 psi). The standard pressure for 175V is 350±10kPa (3.57±0.1 Kgf/cm2,50.75±1.45 psi).

Check valve performance: After holding pressure for 1 minute, the pressure should be ≥250 kPa (2.55 Kgf/cm2, 36.25 psi).

3.2 Simple test of fuel pump

If specialized instruments and equipment are not available, a simple test can be performed.

With the engine off, unlock the vehicle and turn the ignition switch to the off position. Without starting the engine, you should hear the fuel pump working; or you should feel noticeable pressure when you squeeze the high-pressure fuel tube. If the engine is running, disconnect the vehicle's power for more than 10 seconds before performing the above checks.

4.Fuel pressure abnormality handling

If the fuel pressure is higher than the standard value, the fuel pump needs to be replaced. If it is lower than the standard value, the following items need to be checked:

a. Is there a leak in the fuel line?

b. Check if the fuel tank vent pipe is blocked or excessively bent?

c. Is the fuel pump filter clogged?

d. Is the fuel pump malfunctioning?

e. Is the fuel level low?

⚠WARNING

●When pulling out the high-level fuel line, be sure to pull it in the direction of the axis. Do not press or push the protruding parts of the fuel pump and nozzle retainer.

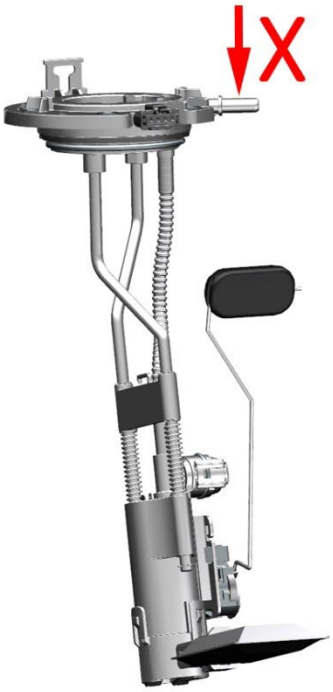

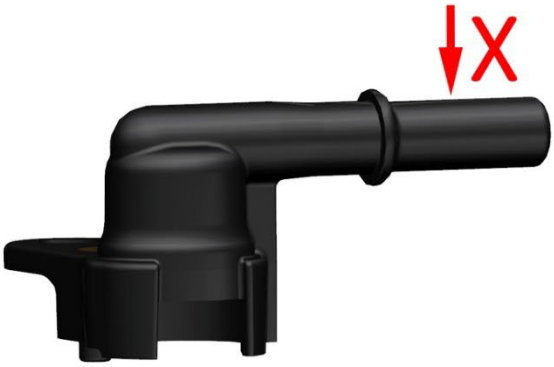

●Smoking, making or using mobile phones, and any other actions that could potentially cause a fire are prohibited at the dismantling site.
●The fuel pump is a precision component that must be assembled in a cleanroom and undergo rigorous testing; therefore, it is forbidden to disassemble it yourself.

CAUTION

●After reinstalling the battery, the electronic fuel injection system needs to be reset. For detailed instructions, please refer to the driver's manual or the precautions section on the throttle body in this manual.

Braking System

Caution:

●For the layout of the brake hose on the vehicle, please refer to the brake system accessories distribution diagram in the "Vehicle Information" chapter of this manual.

Caution:

In order to facilitate after-sales tracking, those who need to purchase brake hoses, disc brake calipers, disc brake main pumps, and hydraulic control units must be reviewed by our company before they can be purchased. Domestic customers can fill in the frame code and engine on the official website before purchasing. Foreign customers need to contact the corresponding salesperson and fill in the corresponding form before purchasing. The specific process can be found by the salesperson.

Braking system component diagram:

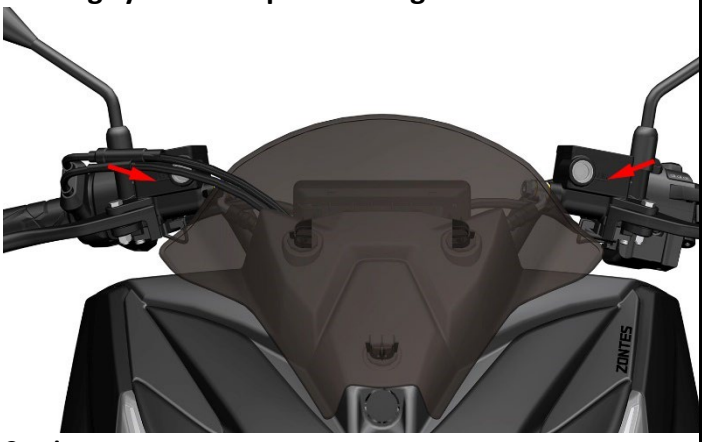

Caution:

●This inspection should be completed by a qualified maintenance organization.

●Regularly check whether the brake fluid level is at 3/4 of the observation window.

●If you accidentally swallow the brake fluid, you should contact the poison control center or hospital immediately; if you accidentally get the brake fluid into your eyes, rinse with water and seek medical attention immediately.

●Brake fluid must be kept away from children and pets.

●It is strictly forbidden to directly flush the main pump with high-pressure water.

1. Check the brake components

a. Check whether the liquid level of the front disc brake main pump and the rear disc brake main pump are above the "LWR" line. Check whether there is brake fluid leakage at the oil pipe joints. Observe the color of the brake fluid. Normally, it should be light yellow. If the color becomes dark, it is recommended to replace the brake fluid.

b. Park the vehicle on a flat ground or a lifting platform, and lower the main support. Check whether there is brake fluid leakage at the oil pipe joints of the main pump, ABS hydraulic control unit and caliper. The endoscope with LED can be used to check the oil pipe joints of the ABS hydraulic control unit and the main pump, or to remove the corresponding cover for inspection.

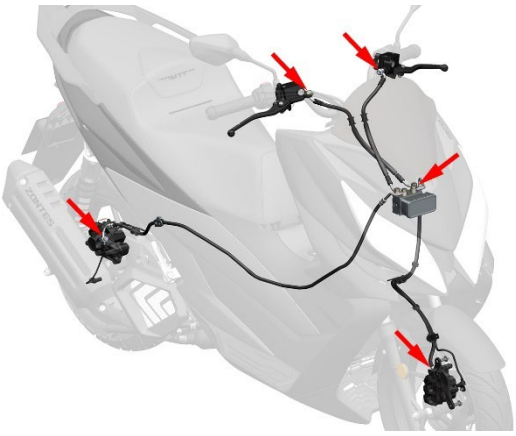

c. Measure the thickness of the front and rear brake discs. If the front brake disc is less than 4mm (0.157 in), replace it. Hang the front wheel in the air and turn the front wheel by hand to observe whether there are obvious damages on the surface, such as pits, deep scratches, grooves, etc. Replace it if necessary. Feel with your hands whether there is a noticeable sound of grinding the brake disc when turning the front wheel. Observe from the front whether the brake disc swings when turning the front wheel; if there is any swing, please remove it according to the steps of dismantling the brake disc, and place it on a standard platform, use a dial indicator to measure the run out or use a feeler gauge to check the brake disc and The gap of the standard platform; such as> 0.08mm (0.003 in), you need to replace the new brake disc. Check the rear brake disc in the same way.

WARNING

●Before checking the brake disc operation, be sure to wait for the brake disc to cool down before proceeding.

●It is forbidden to reduce the temperature of the brake disc by spraying water, which may cause deformation of the brake disc and abnormal noise.

●If the brake disc anti-theft lock is used, please confirm whether it has been removed before driving the vehicle.

●Clean up the silt attached to the brake discs diligently.

d.Check the bolts fixing the caliper.

Use a 10# socket to remove the front caliper bolt. The standard torque for this bolt is 25N.m(2.6 kgf.m， 18 lbf.ft). Do not operate the brake lever after removing the caliper.

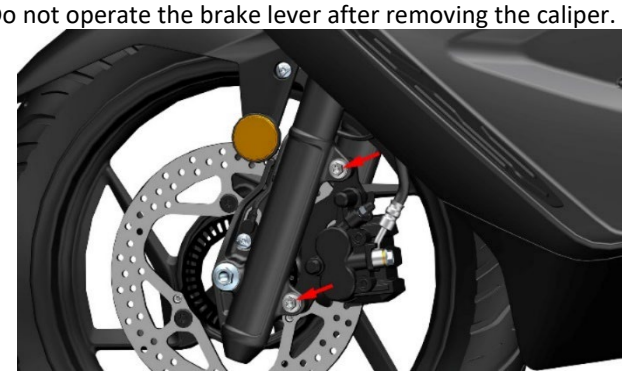

e. Pull out the front brake caliper assembly and check the wear of the brake pads. If they are worn or nearly worn to the limit position, new brake pads need to be replaced in pairs.

f. First, remove the muffler assembly. Then, after removing the caliper bolts using a 10# socket, do not operate the brake lever. The standard torque for this bolt is 25N.m(2.6 kgf.m，18 lbf.ft).

g. Pull out the rear caliper assembly and check the wear of the brake pads. If it is nearly worn or worn to the limit position, new brake pads must be replaced in pairs.

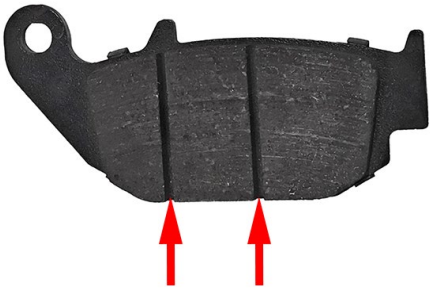

DANGER

●A qualified maintenance organization should check and maintain the brake pads on a regular basis.
●Do not drive immediately after replacing a new brake disc or brake pad. Be sure to hold and release the brake handle several times to allow the brake disc and brake pads to fully fit together to restore normal grip and to make the brake fluid circulate stably.
●The braking distance may be longer than the original braking distance after replacing the new brake disc or brake pad. It needs to be used for about 300 kilometers (186 mile). Good braking effect. Allow enough braking distance before running in sufficiently to ensure driving safety.

WARNING

●The brake pads must be replaced in pairs, only replacing one side will cause uneven braking.
●If the position of the brake pads is incorrect, it is forbidden to operate the brake handle. Otherwise, it will be difficult to reset the piston and may cause brake fluid leakage.

2. Check the front and rear brake switches

2.1 Check the brake switch

Hold the brake handles of the main pumps of the front and rear disc brakes respectively, and observe whether the rear brake lights are on. If it does not light, you need to investigate: whether the brake switch is faulty; whether the rear brake light is faulty; whether the fuse has blown; whether the circuit is open.

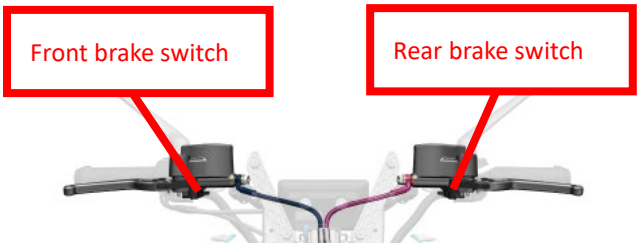

2.2 Replace the brake switch

Take the replacement of the rear brake switch as an example to explain.

a. Pull out the two plugs of the brake switch in the direction of the arrow without distinguishing the positive and negative poles.

b. Use a Phillips screwdriver to remove the bolt to remove the rear brake switch.

c. Replace with a new switch, pay attention to align the switch boss and the limit hole of the brake main pump.

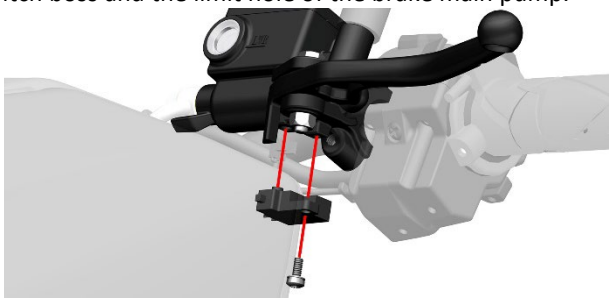

The replacement procedure of the front brake switch is the same as that of the rear brake switch.

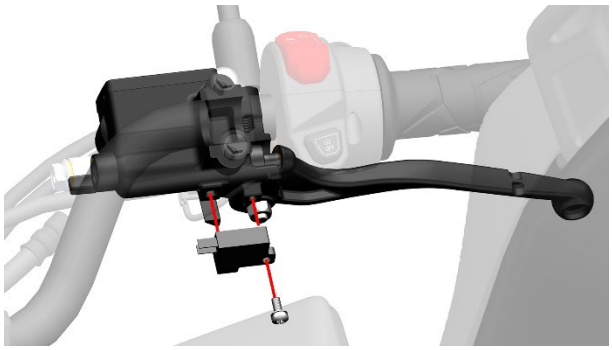

3. Lubricate the movable parts of the brake handle

3.1 Lubricate the front brake handle.

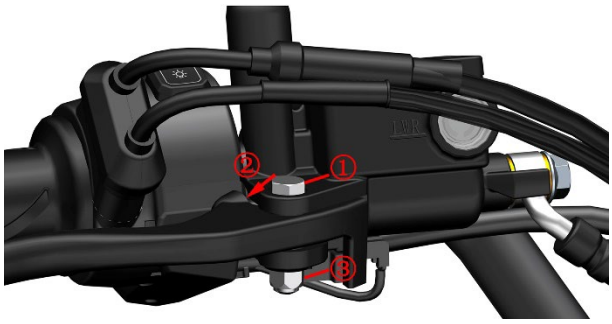

a. Use a 10# torx wrench to rotate counterclockwise to remove the nut③.

b. After grasping the handle, use a 5# inner hexagon counterclockwise rotation to remove the bolt①; remove the brake handle.

c. Wipe the handle pusher and the outer end of the piston with a clean non-woven cloth (the position shown in Figure②), and apply high vacuum silicone grease evenly.

d. Wipe clean the bolt①, and apply high vacuum silicone grease evenly.

e. Reinstall.

3.2 Lubricating the rear brake handle

Refer to the above method to lubricate the rear brake handle.

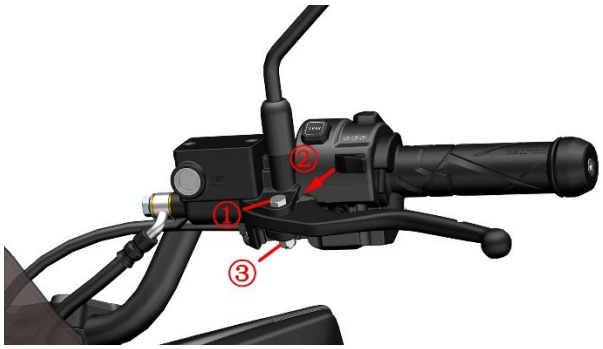

3.3 Replacing the brake handle

Refer to the previous steps to remove the nut③ and bolt① to replace the new brake handle.

4. Replace the brake pads

DANGER

●A qualified maintenance organization should check and maintain the brake pads on a regular basis.

●Do not drive immediately after replacing the new brake pads. Be sure to hold and release the brake handle several times to allow the brake disc and brake pads to fully fit together to restore normal grip and to make the brake fluid circulate stably.

●The braking distance may be longer than the original braking distance after replacing the new brake pads. It needs to be used for about 300 kilometers (186 mile), and the best braking effect can be achieved after the brake disc and the brake pads are fully run-in. . Allow enough braking distance before running in sufficiently to ensure driving safety.

WARNING

●The brake pads must be replaced in pairs, only replacing one side will cause uneven braking.

●The brake pads must be assembled correctly.

●Do not operate the brake handle after removing the brake pads.

4.1 Replace the front brake pads

a. Use a 10# socket to remove the front caliper bolt. The standard torque for this bolt is 25 N.m (2.6 kgf.m, 18 lbf.ft). Do not operate the brake lever after removing the caliper.

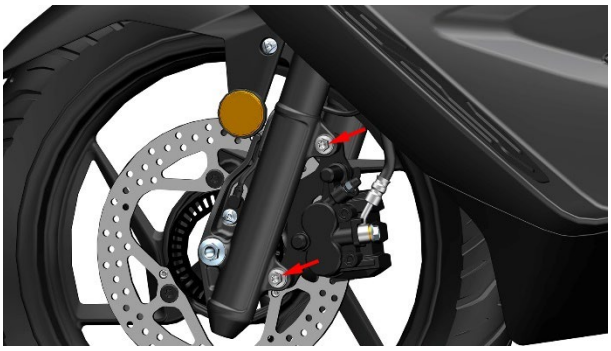

b. Remove the anti-loosening plug with a 5# hexagon socket, and then remove the pin shaft bolt.

Remove the brake pads.

c. Push the piston to the end in the direction of the arrow with the help of a tool. If the resistance is high, you can refer to the method of adding brake fluid to the front brake main pump to remove the upper cover and then push. If the spring on the caliper falls off, it needs to be reinstalled in the direction shown in the figure.

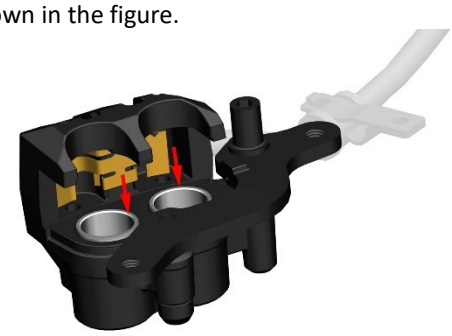

d. Take out the new brake pad and install it back. You need to hold the bottom of the brake pad (through hole end) with your hand. Be careful not to install it backwards, the side with 2 grooves faces the brake disc; the black metal back plate faces the caliper. Brake pads without a fork are installed on one side of the piston, and those with a fork are on the other side.

Piston side

e. After confirming that the upper part of the brake pad is properly assembled, insert the pin bolt and tighten it with a 5# hexagon socket wrench.

f. Use a 5# hexagon socket to tighten the anti-loosening plug.

g. Install the front caliper back onto the front left shock absorber bottom tube and tighten the two M8×30 bolts with a 10# socket. The standard torque for this bolt: 25 N.m (2.6

kgf.m, 18 lbf.ft).

h. Repeatedly pinch and hold the brake handle to check whether the brake returns to normal hydraulic resistance.

4.2 Replace the rear brake pads

a. Refer to the steps in the section "Disassembling the Muffler Assembly" of the previous section on bolts and nuts of the muffler, and first remove the muffler assembly.

Use a 10# socket to remove the two M8×25 bolts that secure the rear brake caliper. After moving the caliper out, use a 5# hex key to remove the anti-loosening plug, and then remove the pivot pin bolt.

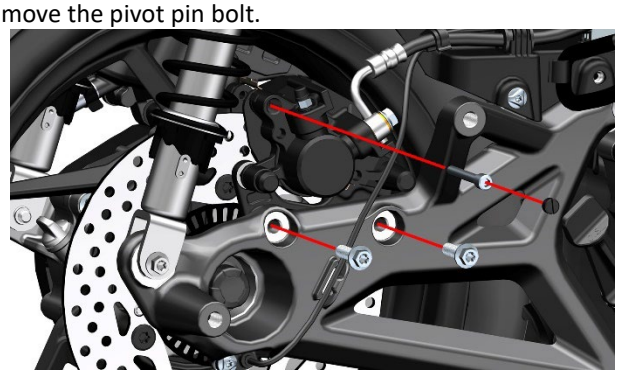

b. Remove the brake pads from the caliper.

c. Push the piston to the end in the direction of the arrow with the help of a tool. If the resistance is high, you can refer to the method of adding brake fluid to the front brake main pump to remove the upper cover and then push. If the spring on the caliper falls off, it needs to be reinstalled in the direction shown in the figure. Take the spring clip indicated by the arrow on the right side of the illustration below, and replace it with the new spring clip provided with the rear brake pads.

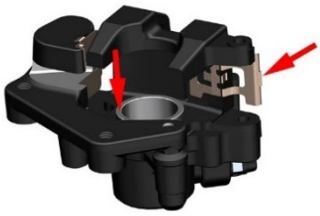

d. Install the brake pads back onto the caliper as shown in the illustration, noting that the brake pad at the position indicated by the left arrow in the illustration must be pressed against the spring plate. Insert the pivot pin bolt all the way in and tighten it using a 5# hex key. Note that it must not be installed backwards; the grooved side faces the brake disc, and the black metal backplate faces the caliper.

e. Use 5 #inner hexagon to lock the anti-loosening plug.

f. Install the rear calipers back into the rear rocker arm and tighten the two M8 × 25 bolts with a 10 #sleeve. The standard torque of the bolts is 25N.m (2.6 kgf.m, 18 lbf.ft). Restore the muffler assembly. The standard torque of the two nuts at the muffler and engine cylinder head is 25N.m (2.6 kgf.m, 18 lbf.ft). The standard torque of the two bolts fixing the rear cylinder of the muffler is 53N.m (5.4 kgf.m, 39 lbf.ft).

g. Repeat pinching and releasing the brake handle to check if the braking has returned to normal hydraulic resistance.

4.3 Abnormal sound of brake pads

The main reasons for the abnormal noise of the brake pads are as follows:

a. The brake pad is worn to the limit. If it is a new brake pad, check whether there is any foreign matter caught between the brake disc and the brake pad. It can return to normal after replacing new brake pads or cleaning foreign objects.

b. Use non-original brake pads with too high hardness and replace them with original ones.

c. The brake disc bolts are loose, and the tightening bolts can be restored to normal.

d. Braking system failure, such as the caliper sliding shaft is not reset due to rust; the brake pads and spring pads are not installed correctly. Derust or re-assemble correctly.

e. The brake disc is out of tolerance, and it can be restored to normal by replacing the new brake disc.

5. Replace the brake disc

DANGER

●The vehicle must be parked on a flat and stable ground or a lifting platform.

●After replacing the brake discs, brake pads, or reassembling the front and rear wheels, the brake handle must be operated repeatedly until the brakes restore the braking effect.

●Contaminated disc brake discs and disc brake pads will reduce the braking effect. Please replace with new disc brake discs and clean the contaminated brake discs.

WARNING

●After disassembling the brake disc or rim assembly, please do not operate the brake handle.

●Check the new brake disc for run out ≤0.08mm (0.003 in) before assembling.

5.1 Replacing the front brake disc

The front brake disc can be removed by referring to the description of the steps for disassembling the front wheel assembly in the "Front Fork Assembly" of this manual.

5.2 Replacing the rear brake disc

a. Refer to the steps in the section "Disassembling the Muffler Assembly" of the previous section on bolts and nuts of the muffler, and first remove the muffler assembly.

b. Remove the rubber cover then one person pinches the rear brake handle, and one person uses 21# sleeve + impact wrench to remove the rear wheel M16×1.5 nut. Standard torque of nut: 120±5N.m(12.2±0.5 kgf.m，89±4 lbf.ft).

c. First, remove the wheel speed sensor wire, the connecting water pipe of the auxiliary water tank, and the disc brake oil pipe from the rear inner mudguard. Then, use a T25 to remove the four bolts of the rear inner mudguard and take it off.

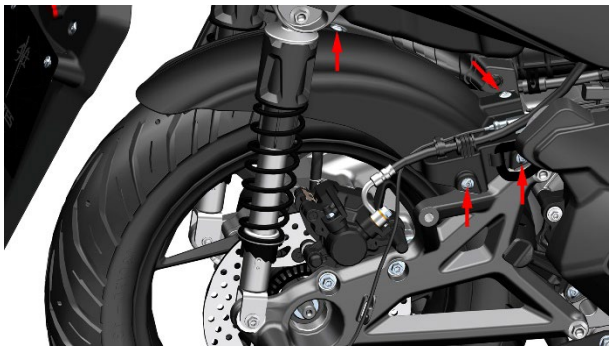

d. Use a 10# socket to remove the two M8×25 bolts (2) that secure the rear brake caliper, use a T25 to remove the M6×12 bolt (4) that secures the wheel speed sensor, and tie up the caliper and wheel speed sensor wires. Note that simply allowing the caliper to hang naturally without interfering with the removal of the rear swingarm is sufficient. Use a 13# socket to first loosen the two M10×43-22 bolts (1). Then use a 10# socket to remove the bolt (3) that secures the rear shock absorber, move the rear shock absorber aside and tie it up. Grasp the rear swingarm firmly with one hand and remove the two bolts (1) with the other hand. Pull the rear swingarm outward to remove it, and note that the bushing (5) must not be omitted during reinstallation. The standard torque for bolt (1) is 55±5 N.m (5.6±0.5 kgf.m, 41±4 lbf.ft), and for bolts (2) and (3) it is 25 N.m (2.6 kgf.m, 18 lbf.ft).

e. Remove the shaft sleeve and take off the rear wheel assembly.

f. Replacing the rear brake disc

Remove bolts with T45 soket,and then take off the brake disc assembly.

g. Refer to the order of disassembly to restore. Note that bolts with torque requirements need to be calibrated according to standard values.

Brake hose

Caution：

●This inspection should be carried out by a qualified maintenance unit.

●Regularly check the brake hose according to the maintenance schedule.

●It is recommended to replace the brake hose every 4 years. Refer to steps 1 and 2 in the inspection of brake components in the braking system. You can use an LED-equipped endoscope to facilitate the inspection of the ABS hydraulic control unit and the oil pipe joints of the main pump, or remove the corresponding covering to check.

Brake fluid

Caution：

●This inspection should be carried out by a qualified maintenance unit.

●It is strictly prohibited to directly rinse the main pump with high-pressure water.

●After disassembly, ensure that all components are correctly and accurately reinstalled.

●It is strictly forbidden to mix in water, dust, impurities, and silicate or petroleum-based liquids, otherwise it will cause serious damage to the braking system.

●This vehicle uses DOT 4 brake fluid and it is prohibited to mix it with other brake fluids.

●Wear protective gloves, protective clothing, protective goggles, or a protective mask.。

●After the brake fluid is opened, it must be used promptly. When storing, ensure proper sealing and moisture-proof measures; it is recommended not to exceed 1 month. Poor-quality or damp brake fluid can cause adverse effects on the braking system, and in severe cases, it may lead to brake failure.

●Avoid letting the brake fluid drip onto the paint surface of

the body or the surface of the components. If accidentally splashed, immediately rinse with clean water.

DANGER

●If you accidentally swallow the brake fluid, you should immediately contact the poisoning control center or a hospital; if it gets into your eyes, rinse with clean water and seek medical attention immediately.
●Brake fluid must be kept away from children and pets.
●The vehicle must be parked on a flat, stable ground or on a lifting platform.

1.Add brake fluid to the front and rear disc brake master cylinders

a.The process of adding brake fluid to the front brake master cylinder will be explained using this example. Adding fluid to the rear brake master cylinder follows the same steps.

b.Place the vehicle horizontally.

c.Wrap the surrounding area of the master cylinder with an oil-resistant plastic film to prevent the brake fluid from dripping onto the surface of the components and damaging the paint layer.

d.After putting on waterproof gloves, use a cross-head screwdriver to remove bolt ①, remove the upper cover ②, and the sealing gasket ③.

e. Use a brake fluid water content tester to measure the water content. If it is >2%, replace all brake fluid; if it is ≤2%, add newly opened DOT 4 brake fluid to 3/4 of the transparent inspection window of the front disc brake master cylinder. It is recommended that the water content be below 1.5%. This vehicle was factory-filled with fully synthetic DOT 4 brake fluid.

The image above shows a brake fluid water content tester. This image is from the internet, and the copyright belongs to the original author. Please do not use it for other purposes.

f. Clean out any foreign objects before reassembling.

2. Replace brake fluid

Refer to the steps for adding brake fluid on the previous page. If the moisture content is greater than 2%, the brake fluid needs to be replaced. This inspection should be conducted every 6,000 kilometers (3,728 miles) or every 15 months. It is recommended to replace the brake fluid every 2 years. Failure to replace the brake fluid for a long time will result in the formation of sediment that blocks the oil pipes, the main pump oil holes of the disc brakes, or causes the piston to get stuck, leading to poor or failed braking performance and thereby affecting driving safety.

2.1 Replace the front brake fluid

a.Wrap the front brake main pump area with an oil-resistant plastic film as shown in the previous section.

b. Remove the cap ① from the vent valve and attach an 8# box wrench. Insert a 6mm (0.23 in) flexible hose into the vent valve ②, being careful not to remove the box wrench.

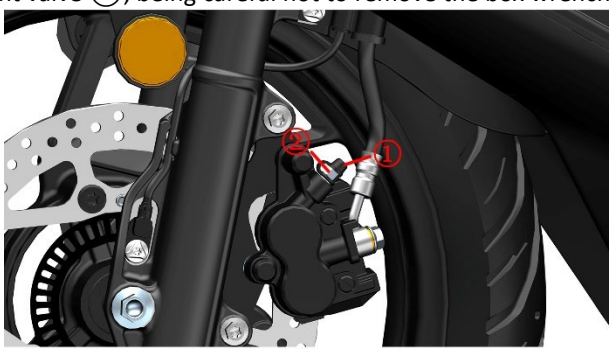

c. Place the other end of the hose into the fluid reservoir.

d. Refer to the brake fluid addition steps on the previous page to remove the front brake master cylinder cover.

e. Rotate the 8# hex wrench counterclockwise with your right hand to loosen the air release valve. With your left hand, slowly and evenly press the front brake control handle all the way down and hold it in place. Then, clockwise lock the air release valve and slowly release the handle. Pay close attention to the liquid level of the front brake main pump. If it is too low, add it in time to prevent air bubbles from entering the brake hose. Repeat the above steps until clear, transparent, and light yellow brake fluid flows out.

f. Observe whether the liquid level of the main pump is at the 3/4 mark of the transparent inspection port. If not, add, use a syringe to draw out or discharge.

g. After the brake fluid replacement is completed, remove the 6mm (0.23 in) hose; use a torque wrench to tighten the air release valve to the standard torque: 10 N.m (1 kgf.m, 7 lbf.ft). Then, put the rubber cap back on the air release valve.

h. Install the upper cover of the main pump back.

i. Repeat pressing and releasing the brake control handle to check if the braking returns to normal hydraulic resistance.

WARNING

●The waste brake fluid discharged must be properly disposed of and should not be reused. It is strictly prohibited to dump it randomly into the environment or leave it carelessly. It should be handed over to a qualified recycling unit for proper disposal.
●The steps for discharging the brake fluid must be strictly followed without any mistakes; bubbles must not enter the brake lines.
●When releasing the brake control lever, it must be done slowly and evenly to prevent bubbles from entering the brake lines.
●The release port must be locked in place before releasing the brake control lever; it is strictly prohibited to lock it

partially; and excessive force must not be applied.

2.2Replace rear brake fluid

Follow the steps for replacing the brake fluid of the front brakes to replace the brake fluid of the rear brakes.

3.Exhaust of brake system

If the handwheel feels too soft when being pressed and the braking performance significantly deteriorates, you should first check whether the brake fluid level of the main pump is below the "LOW" line and whether there is any leakage in the braking system. If these two issues are ruled out, and the problem still persists, you can try the exhaust operation. The exhaust operation is similar to the previous operation of replacing the brake fluid. To replace the brake fluid, you need to ensure that a stable, clean and transparent light yellow brake fluid flows out. For the exhaust operation, the fluid that flows out should be foamy.

After the exhaust is completed, you need to check whether the brake fluid level of the main pump is in line with the standard.

WARNING

●The discharged waste brake fluid must be properly handled and should not be reused. It is prohibited to dump it randomly into the environment or leave it carelessly. It should be handed over to a qualified recycling unit for proper disposal.

●During the operation, one must closely monitor the liquid level in the main pump and replenish it in time to prevent air from entering the brake hose.

Tire

DANGER

●Before driving, it is necessary to check the condition and pressure of the tires.

●When the tires reach the limit of wear or have cracks, wounds, etc. on the surface, they should be replaced immediately.

●When using new tires, special attention should be paid to driving safety. New tires that have not been properly broken in may slip and cause the vehicle to lose control.

●Within 150 kilometers (93 miles) after replacing the tires, avoid sudden acceleration, sharp turns, and emergency braking.

●The standard front tires of this vehicle are 110/70-14, and the rear tires are 130/70-13. When replacing tires, standard specification tires should be used. Using non-standard tires may cause problems.

●It is not recommended to use the external patching method for tire repair. The tire should be removed for internal patching. For temporary emergencies, external patching can be used, but the vehicle speed should be reduced and an internal patching should be done as soon as possible at a repair facility. If there is a scratch, puncture, tear on the sidewall, or a large hole in the tread, the tire should be replaced directly. After patching, the dynamic balance should be redone.

WARNING

● Regularly check the tire pressure. Under normal temperature conditions, the standard pressure for the front wheels is 195 kPa (2 kgf/cm2, 28 PSI), and for the rear wheels it is 230 kPa (2.35 kgf/cm2, 33.4 PSI).

● When you notice a decrease in tire pressure, check if there are any nails or small holes in the tires; or if there are any deformations or cracks on the side of the rim due to collisions.

● When using a tire removal machine to remove the tires, be careful to avoid the valve stem position. Pay attention to protecting the contact area between the rim and the tire lip. If scratched, it may cause air leakage.

● Excessive tire pressure results in a reduced contact area with the ground, making it prone to skidding and causing loss of control. In summer, it is also more likely to cause tire blowouts. Insufficient tire pressure will lead to steering difficulties, accelerate wear, and increase engine load and fuel consumption.

● Frequent exposure to the sun can cause tire cracking and aging. It is recommended to park the vehicle in a dust-free, sun-protected, and ventilated area; or cover it with a car cover to protect both the vehicle body parts and the tires better. If the vehicle is not driven for a long time, support it firmly and keep the tires suspended to avoid long-term load on the contact area with the ground and prevent deformation.

● Because the tire self-replenishing of air may block the air holes of the tire pressure monitoring sensor, causing difficulty in inflation or failure of the tire pressure monitoring, it should not be used.

1.Check the tires

a. Park the vehicle on a flat and stable surface or on a lifting platform, and lower the main support.

b. Support the front wheel with the appropriate tools to keep the front tire off the ground. Then rotate the tire and carefully inspect for any abnormalities such as uneven wear, punctures, cracks, etc. Remove small stones or other foreign objects embedded in the tire tread. Check if the tire tread and sidewall have worn down to the marking point. If they are close to or have already worn down to the marking point, replace the tire with a new one of the same specification promptly. Use a tire pressure gauge to measure the tire pressure of the cold tire and add or release air to the standard value.

The height of the raised wear mark on the tread is 1.6mm (0.06 inches). The triangular (△T.W.I.) mark on the sidewall indicates the position of the wear strip. If the wear reaches the mark point, it indicates that the tire has reached its limit and continued driving would pose safety risks. A new tire of the same specification must be replaced.

c. The inspection of the rear tires is the same as that of the front tires. This part will not be repeated here.

2.Replace tires

a. Replace the front tire

Refer to the steps described in the manual "Front Fork Components" for disassembling the front wheel assembly. Use a tire remover to remove the tire. During the disassembly process, be careful to avoid the valve stem position and do not use a pry bar to pry open the tire at the valve stem position to avoid damaging the tire pressure sensor. Before press-fitting the tire, install it according to the rotation direction indicated on the tire side. The yellow mark should align with the valve stem position. After replacing the new tire or patching the tire, re-perform the dynamic balance to avoid front wheel shaking that may affect the driving experience due to imbalance.

b. Replacement of rear tires

Refer to the previous operation for replacing the brake disc to remove the rear wheel assembly. The other operations are similar to those for replacing the front tires, and they will not be repeated here. Click the arrow to view the steps for replacing the rear brake disc.

Steering mechanism

Caution:

●Regularly inspect the steering mechanism according to the requirements of the regular maintenance table.

●Park the vehicle on a flat and stable ground or a lifting platform, and put down the main support.

●Too small steering mechanism clearance will cause inflexible steering and accelerate bearing wear. When it is too large, it will cause driving jitter and abnormal noise when braking.

1. Check the steering mechanism

a. Support the front wheel with a suitable tool so that the front tire is hung in the air and then rotate the direction handle left and right to confirm whether the rotation is flexible and smooth; whether the cable and cable show signs of being pulled.

b. Keep the front wheel suspended, shake the front wheel assembly in multiple directions, to confirm whether the front fork assembly is axially strung or loosened in the radial direction.

2. Adjust the steering mechanism

If the steering is not flexible or loose, the axial bearing clearance should be adjusted.

Refer to the steps in the "Replace Lower Triple Clamp" section of the "Front Fork Assembly" chapter in this manual for adjustment, and they will not be repeated here.

3. Maintain steering bearings

If adjusting the steering bearing clearance fails to restore it, the steering bearing must be removed to check for wear, rust, lack of grease, etc. in the bearing and race.

Refer to the steps for replacing the lower yoke in the "Fork Assembly" section of this manual for operation, and they will not be repeated here.

4. Malfunction

Normally rotate the handle, if it feels more laborious, you need to investigate the following reasons:

a. Whether the steering mechanism is too tight, refer to the previous steps to adjust the steering mechanism to solve;

b. The steering mechanism bearing is rusty, the steel bowl or steel ball is damaged, and it needs to be disassembled and replaced;

c. The front tire pressure is insufficient and needs to be charged to the standard tire pressure is 195kPa(1.99 kgf/cm^2， 28.28PSI) under normal temperature conditions;

d. The column of the lower link plate is deformed and needs to be removed and replaced.

Front fork

Caution：

●Every 12,000 km (7,456 miles), check if the front fork is leaking or deformed, and whether the shock absorber's rebound is normal.

●Before each ride, check if the front shock absorber is leaking, and if the fasteners are loose to ensure driving safety.

●When replacing the hydraulic oil, use kerosene or diesel to thoroughly clean all components. Use a measuring cylinder to measure 119 ± 2.5 ml of 10W hydraulic oil and pour it in all at once. Avoid mixing different types of hydraulic oil.

●After passing through dusty or muddy roads, promptly remove foreign objects from the front fork tube (the exposed chrome section of the cylinder) to avoid scratching the dust seal or oil seal and causing leakage. You can wipe it clean with a soft cloth.

●Do not use a high-pressure water gun to directly rinse the dust seal from a close distance.

●If the vehicle is not driven for a long time, it should be parked in an ventilated and dry environment. Dark and damp environments are prone to cause rust on the front fork tube and other parts of the vehicle. In coastal areas, the front shock absorber should be maintained more frequently than in inland areas. After cleaning, apply a small amount of rust preventive oil for rust prevention.

1.Check the appearance

a.After parking the vehicle securely with the front wheels raised, turn the steering wheel to check if there is any leakage in the front shock absorber; inspect the surface of the front fork tube for scratches, dents, rust, etc. For minor scratches or small dents, and slight rust, they can be smoothed out using sandpaper of about 2000 mesh. Clean the dust or foreign substances at the dust-proof seal area.

b.Check if the base cylinder has peeling paint; look for any signs of fracture or cracking at the installation points of the front fender and front brake calipers. Check for any leaks at the bottom of the base cylinder.

c. If there is a large amount of hydraulic oil adhering to the front fork tube, wipe it clean first and then ride to observe. If there is no oil stain or only a slight one, it is the hydraulic oil accumulated during the assembly of the dust seal, and it can be determined that the oil seal is not leaking. If there is a small amount of oil stains or a mixture of oil and dirt, remove the dust seal and wipe clean the front fork tube and the surface of the oil seal. Compress the front shock absorber once and then wipe clean again before compressing; repeat this operation 10 times. Observe if there is still any oil on the front fork tube. If there is, the front shock absorber is leaking and the dust seal and oil seal need to be replaced. If not, it is a normal phenomenon that a small amount of hydraulic oil accumulated during assembly.

d. Use a mirror or a phone lens to check if there is any leakage at the bottom of the housing. If there is a slight leakage, first check if the bolts are loose. The torque of these bolts is 20-26 N.m (2-2.7 kgf.m, 15-19 lbf.ft). After tightening, if there is still leakage, replace the sealing gasket

2.Check shock absorption performance

Hold the front brake lever firmly and press it down forcefully. Release the handle and it should be able to compress smoothly and return to normal. Repeat this process several times for inspection. If there is any obstruction, remove the shock absorber for troubleshooting. If the front wheels are hit or if the vehicle jumps over a bump at high speed, check if the shock absorber is deformed. Check the shock absorber's performance according to the maintenance schedule. During operation, prevent the vehicle from rolling over.

3.Disassemble the front shock absorber

Refer to the disassembly steps of the front shock absorber in this manual's "Front Fork Components" section and remove the front shock absorber.

4.Correct the front fork tube

If the front wheels of the vehicle hit a bump at high speed or collide, it is necessary to check whether the front fork tube is deformed. Take the left shock absorber as an example. Fix the shock absorber by using the end face at the front wheel axle of the shock absorber base cylinder and the end face of the front mudguard installation point; or remove the front fork tube. Use a dial indicator to measure the deformation amount of the front fork tube in the axial direction, and rotate the front fork tube to measure different positions.

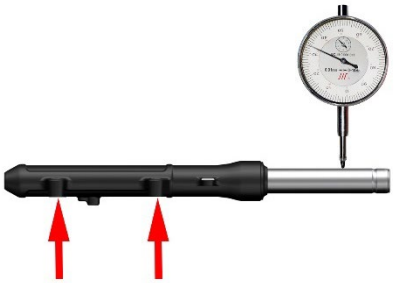

For slight deformations with a deformation amount of less than 0.2mm (0.008 inches), the front fork tube can be

supported by V-shaped iron blocks. Soft materials such as rubber or copper sheets should be placed on the contact surface to prevent the front fork tube from being scratched. Use a press machine to slowly apply a small pressure and a small stroke for multiple rounds of straightening. Measure while straightening and correct the radial runout to be less than 0.05mm (0.002 inches). If the original bent part does not regain its round shape after correction, it should be replaced. If the deformation is too large, the shock absorber should be replaced.

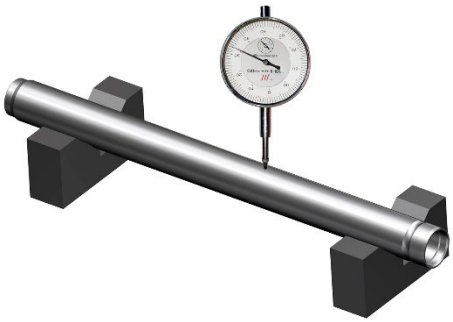

5.Troubleshooting

a. When driving on uneven roads or performing emergency braking, there will be obvious impact sounds. The following items need to be checked:

Whether the shock absorber spring is broken or its elasticity has decreased;

Whether the hydraulic oil is insufficient or has air in it;

Whether the hydraulic oil is excessive;

Whether the spring is axially bent and rubbing against the front fork tube.

b. If the shock absorption is too hard, the following items should be checked:

Whether the hydraulic oil is excessive;

Whether the front fork tube is bent or deformed;

Whether the spring has been modified.

c. If the shock absorption is too soft, the following items should be checked:

Whether a lower viscosity hydraulic oil has been replaced;

Whether the spring elasticity has decreased;

Whether the hydraulic oil is insufficient.

Rear shock absorption

Caution:

●If the rear shock absorber has a lot of mud and sand, it should be cleaned in time to prevent soft and big stones from scratching the chromed parts and causing rust.

●Non-professionals should not disassemble the rear shock absorber by themselves.

●It should be maintained according to the regular maintenance table.

1. Check

a. One person straightens the vehicle and stabilizes the vehicle, and one person presses the rear armrest behind to observe whether the rear shock absorber can recover smoothly.

b. Check whether the shock-absorbing bolts are loose.

c. Grasp the upper part of the damping spring and rotate it in the radial direction. It should be able to rotate in a small amount. Check the bottom in the same way. If the upper part cannot be rotated, the shock-absorbing rubber buffer sleeve has aged and failed; if the bottom cannot be moved, the buffer sleeve on the rear rocker arm and the engine box has failed and needs to be replaced.

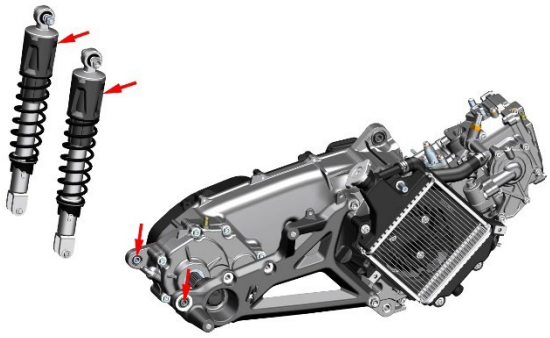

d. Check whether the weld at the bottom of the shock absorber is leaking.

2. Adjust the preload

The rear shock absorber equipped on this vehicle can be adjusted by the owner according to their needs. It is sorted into 1-5 levels, with level 1 being the softest, level 5 the hardest, and the default setting at level 3 when leaving the factory.

2.1 Adjust the left rear shock absorption

a. The left rear shock absorber can be adjusted for hardness and softness by turning it by hand. Turning clockwise makes the shock absorber stiffer, and turning counterclockwise makes it softer.

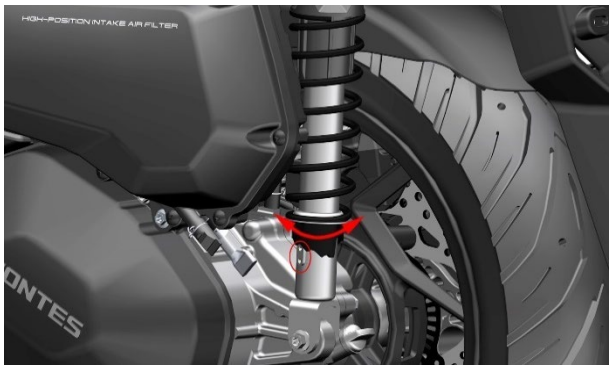

2.2 Adjust the right rear shock absorption

a. The right rear shock absorber needs to be adjusted when the muffler is in a cooled state. Pull the spring upward with one hand and adjust the shock absorber spring with the other hand. Turning clockwise makes the shock absorber stiffer, while turning counterclockwise makes it softer.

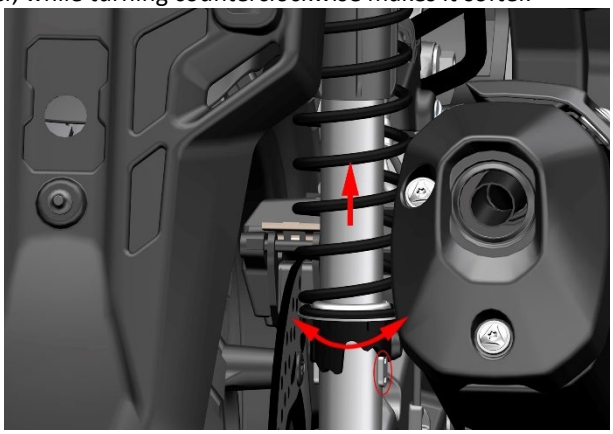

Note: When adjusting the shock absorber, only one gear can be adjusted at a time. Skipping gears during adjustment may cause finger pinching. When adjusting the shock absorber, the arc of each gear must be engaged with the

stopper in the red circle in the figure above, and not on the bevel or sharp corner.

2. Replace the shock absorption

a. Refer to "Disassembling Muffler Assembly" to remove the muffler assembly.

b. Use a 14 #plum wrench to fix the nut on the inside, completely loosen the bolt on the 13 #socket on the outside, and remove the nut. Be careful not to remove the bolt first. Remove the nut on the other side using the same operation. Nut torque standard: 50N.m (5.1 kgf.m, 37 lbf.ft).

c. After grasping the rear right shock absorber, use T40 plum blossom or 10 #sleeve to remove the M8 × 35 bolt at the bottom, then remove the bolt and replace the rear right shock absorber. When replacing the shock absorber, replace one side of the shock absorber before replacing the other side. The standard torque of the M8 × 35 bolt is 25N.m (2.6 kgf.m, 18 lbf.ft).

Bolts and nuts for body and engine installation

Caution:

●Regularly check the body fasteners according to the maintenance schedule.

●Loose engine fasteners will increase the vibration and affect the driving experience.

1. Check the fasteners for the critical parts

Check whether the front disc brake caliper bolts, front shock absorber bottom cylinder bolts, lower link plate bolts, rear rocker arm and engine connecting bolts, rear wheel spline shaft nuts, rear disc brake caliper bolts, and side bracket and main bracket nuts are loose.

2. Check engine fasteners

The standard torque of the engine rocker with 3 M10 nuts is 65 N.m (6.6 kgf.m, 48 lbf.ft).

Refer to "Disassembly of Vehicle Cover Parts" for "Disassembly of Rear Storage Box" and "Disassembly of Left and Right Side Cover" to remove the rear storage box and left and right middle covers.

Check if the three nuts connecting the rear rocker frame shown in the figure are loose.

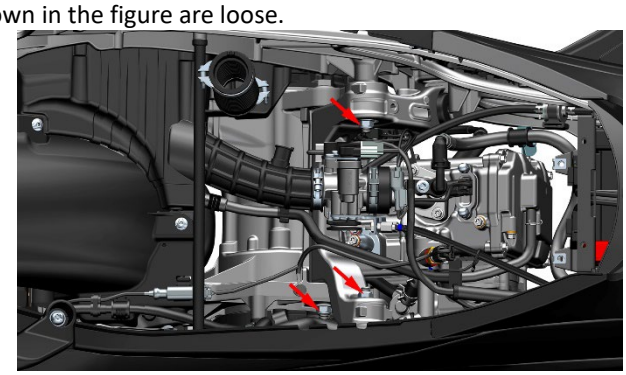

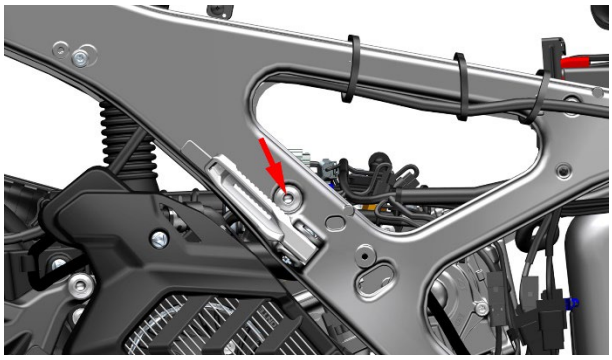

Side Bracket

Caution:

●Park the vehicle on a flat and stable ground or on a lifting platform, and lower the main support.

●When disassembling or assembling the springs, be sure to prevent them from suddenly flying off and causing personal injury.

1.Inspection

1. Side support 2. Side support spring
3. Side support shutdown switch
① Parking position ② Driving position

a. Check if the side support spring is damaged and if its elasticity is normal.

b. Check if the side support rotates normally. When turned to the angle shown in Figure 1, it should be able to automatically move to the parking position under the spring's elasticity; at the angle shown in Figure 2, it should be able to automatically move to the driving position. If necessary, the side support can be removed for lubrication.

c. Check if the off-switch function is normal.

When the side support (parking position) is lowered, the vehicle should not be able to start; when the side support (driving position) is retracted without gripping the front or rear brake lever, the vehicle should not be able to start either; after starting the vehicle, when the side support is lowered, it should automatically shut off the engine; otherwise, faults in the off-switch or brake switch need to be investigated.

d. Check if the side support mounting plate is deformed or cracked.

2.Lubrication

a. Fold up the side supports to position the spring in its shortest position for easy disassembly.

b. You can use thick steel wire to roll into a circular shape and then insert it into the spring hook. Make sure that during the pulling process, the steel wire does not loosen or break apart.

c. Grasp the side bracket with one hand and pull it in the direction of the arrow to remove the spring.

d. Lower the side bracket. Use a 14# box spanner to remove the nut. Then, using a 14# box spannerh on the inner side, remove the bolt and the bushing, and finally remove the side bracket.

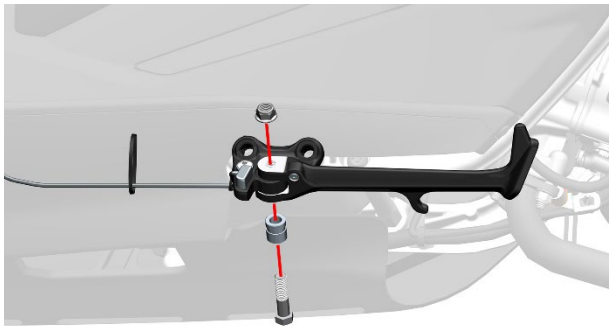

g. Use diesel or kerosene, or clean rags to wipe off any remaining lubricating grease. Apply an appropriate amount of lubricating grease to the two installation planes on the inner side of the side bracket and the outer surface of the bushing. Try not to apply it to the threaded holes.

Main bracket

Caution：

●Park the vehicle on a flat and stable surface or on a lifting platform, and lower the side supports.

●When disassembling or assembling the springs, be careful to prevent them from suddenly flying off and causing personal injury.

1.Inspection

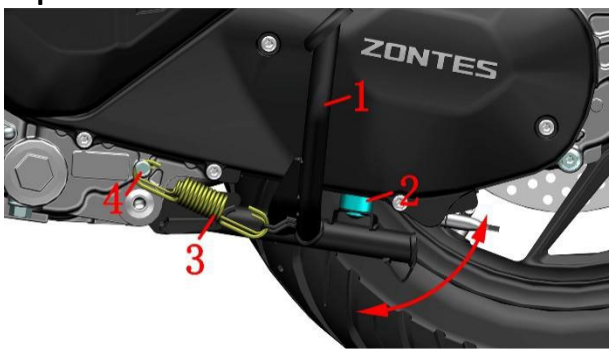

1. Main support 2. buffer rubber 3. Main support spring 4. Main support reset spring column

a. Straighten the vehicle, use your foot to step on the lever of the main support to check if the spring elasticity is normal. The main support should be able to quickly return to the driving position under the elasticity of the spring itself.

b. Check if the cushioning gel is aged or lose efficacy.

c. Check if the main support reset spring column is deformed.

d. Check if the main support has obvious deformation and if the welding parts are cracked.

2.Lubrication

a. This operation must be carried out only after the muffler has cooled down. Refer to the steps for removing the side bracket spring. First, remove the main bracket spring from the main bracket. Use a 13# socket to fix the head of the bolt on the right side of the vehicle, then use a 14# box spanner to loosen the nut counterclockwise. Do not remove the bolt yet. Use the same method on the left side to remove the bolt and nut. After removing the bolt on the right side, remove the main bracket and the bushing together.

b. Apply an appropriate amount of lubricating grease to the green surface shown in the diagram.

3.Install the main bracket

Refer to the disassembly steps to reinstall the main bracket.

First, attach the main bracket spring to the main bracket, and then use a hex key wrench to insert the spring into the reset spring column of the main bracket.

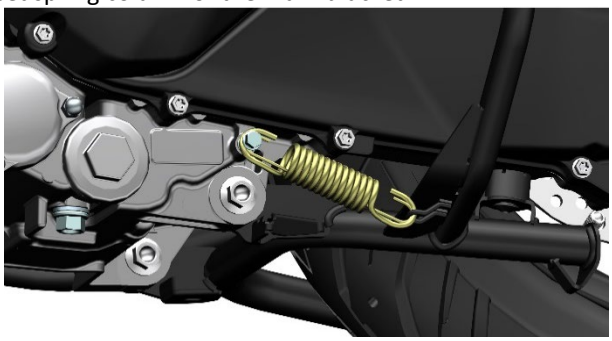

4.Replace the main bracket reset spring column

After removing the main support according to the previous steps, use an 8# socket to remove the reset spring column of the main support counterclockwise. It is recommended to apply an appropriate amount of thread locking adhesive before assembly. Torque: 12 N.m (1.2 kgf.m, 9 lbf.ft)

Sound, light and electrical device inspection

Caution:

●Before driving, it is necessary to check whether all the lights of the vehicle are functioning properly, including turn signals, tail lights, brake lights, headlamps, etc. Also, check if the horn is working properly.

1.Inspection

The full list of vehicle lights can be found in the vehicle information section of this manual, under the section of "Light Distribution Map".

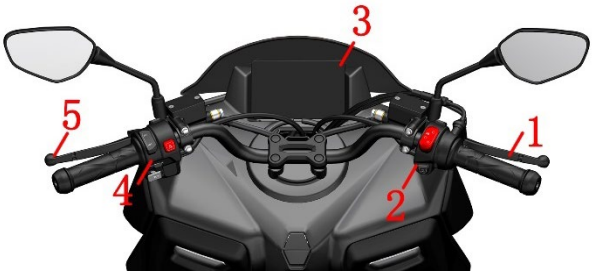

1. Front brake lever 2. Right handle switch 3. Instrument 4. Left handle switch 5. Rear brake lever

a. Park the vehicle on a flat ground or on a lifting platform, lower the main bracket, and retract the side brackets.

b. Press the " ⏻ " button on the right switch briefly.

①After unlocking and powering on the vehicle, confirm that the ignition switch is turned to " ", hold down the front or rear brake lever, and press the start button.

②Start the engine.

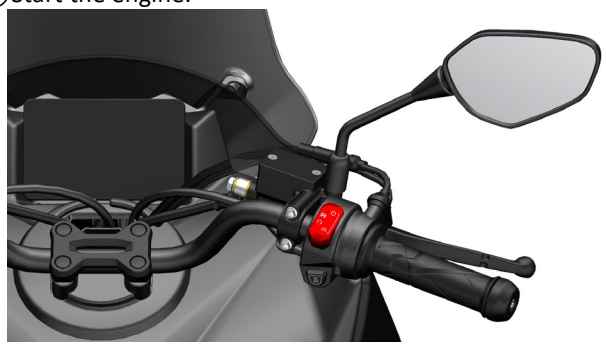

c. Test of the left switch buttons. Those who want a more detailed understanding of the functions of each button can refer to the driving manual. Here, we will briefly explain how to test whether they are functioning properly.

①SEAT button: Press the SEAT button briefly to open the seat lock.

②Hazard warning lights: Press it to make the four turn signals flash; press it again to turn them off. It is necessary to follow traffic regulations and this button should not be used in non-emergency situations.

③Steering switch: Push it all the way to the right to check if the right front and rear turn signals are functioning properly; press the turn signal to turn it off; push it all the way to the left to check if the left front and rear turn signals are functioning properly.

④Horn: Press the horn to make a single sound; confirm if the sound is clear and loud.

⑤MOD button: Select the next item. This button is prohibited from being operated when driving the vehicle.

⑥SET button: Press briefly to enter the main menu / confirm the selection. Press for a long time to return to the main interface. Do not operate this button when driving a vehicle.

⑦Light adjustment switch: The default setting is low beam. Press upwards to turn on the high beam, and press

downwards to turn on the overtaking light. Please follow traffic regulations to use the high and low beam lights appropriately.

d. Check the battery voltage

When the engine is not started, continuously measure the voltage for 5 seconds; if ≤11.7V, the display symbol will flash an alarm (flashing frequency 1Hz, and the alarm will automatically clear if >11.9V for 5 seconds). When the engine is started, continuously measure the voltage for 5 seconds; if <12.6V, the display symbol will flash an alarm (flashing frequency 1Hz, and the alarm will automatically clear if ≥ 12.6V for 5 seconds).

You should promptly use the charger to charge it. Be careful not to overcharge or over-discharge. When the vehicle is not used for a long time, it should be charged regularly according to the requirements in the driving manual. If the battery fails, it should be properly handled by a professional recycling institution. Do not discard it randomly to avoid polluting the environment.

Caution：

●Before driving, it is necessary to check whether all the lights of the vehicle are functioning properly, including turn signals, tail lights, brake lights, headlamps, etc. Also, check if the horn is working properly.

Charging method

Open the seat cushion and remove the battery cover plate using a T25 box spanner. After removing the protective cap, use the charger to charge the battery.

●**Caution**: When reassembling the battery or fuses, etc., be sure to reset the electronic fuel injection hardware. The specific method can be found in the service instructions before the electronic fuel injection system is installed.

2.Headlight height adjustment

Caution：

●If the height of the headlights is too high or too low, it will affect safe driving. The height of the headlights should be adjusted reasonably according to whether there are passengers and the weight change of the driver.

●It is strictly prohibited to adjust the height of the headlights during riding. It is recommended to find a flat and straight road about 150 meters long to adjust the headlights under the condition that it does not affect traffic safety at night.

The headlight has two independently adjustable parts, with the high and low beams adjusted as a single unit, corresponding to the adjustment positions of the left and right headlights respectively. Squat down at the front of the vehicle and look towards the rear housing of the light, where there is a screwdriver guide slot.

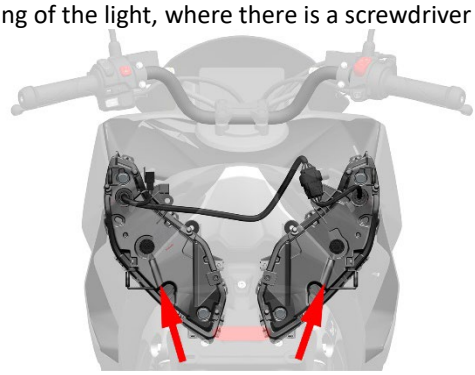

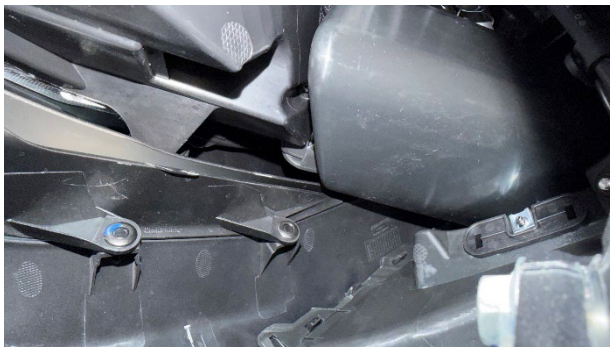

Use a 6×150-200 Phillips screwdriver, insert it into the dimming hole along the guide slot against the rear shell of the headlight, turn counterclockwise to lower, and turn clockwise to raise. Note that when dimming, the Phillips screwdriver must effectively engage with the serrations of the dimming bolt.

3.Fuse box

Caution：

●If the fuse blows, it must be replaced with a fuse of the same specification. Do not use wires such as copper or iron to directly connect.

●If it blows again after replacement, you need to first check the faults of the entire vehicle's wiring before replacing it.

●This vehicle uses small-sized fuses. They are approximately 11mm (0.43 inches) wide, 17mm (0.67 inches) long, and about 4mm (0.16 inches) thick.

●Use the buzzer function of the multimeter to connect to the exposed metal part on the upper part of the fuse to determine if it has blown, or use a tool to pull it out and observe.

After opening the fuse box cover, check whether the fuses are normal. The 25A main fuse, 15A ABS ECU, 15A ECM, and 25A ABS motor fuse; 10A starting and other, 15A PKE, and lighting.

4.Troubleshooting

If the button cannot be pressed, immediately determine it as a switch issue. If pressing yields no response, further diagnosis is required to identify whether the switch, wiring, or the electrical component itself is at fault.

4.1 Right-hand switch

a.Pressing the start button does not respond.：

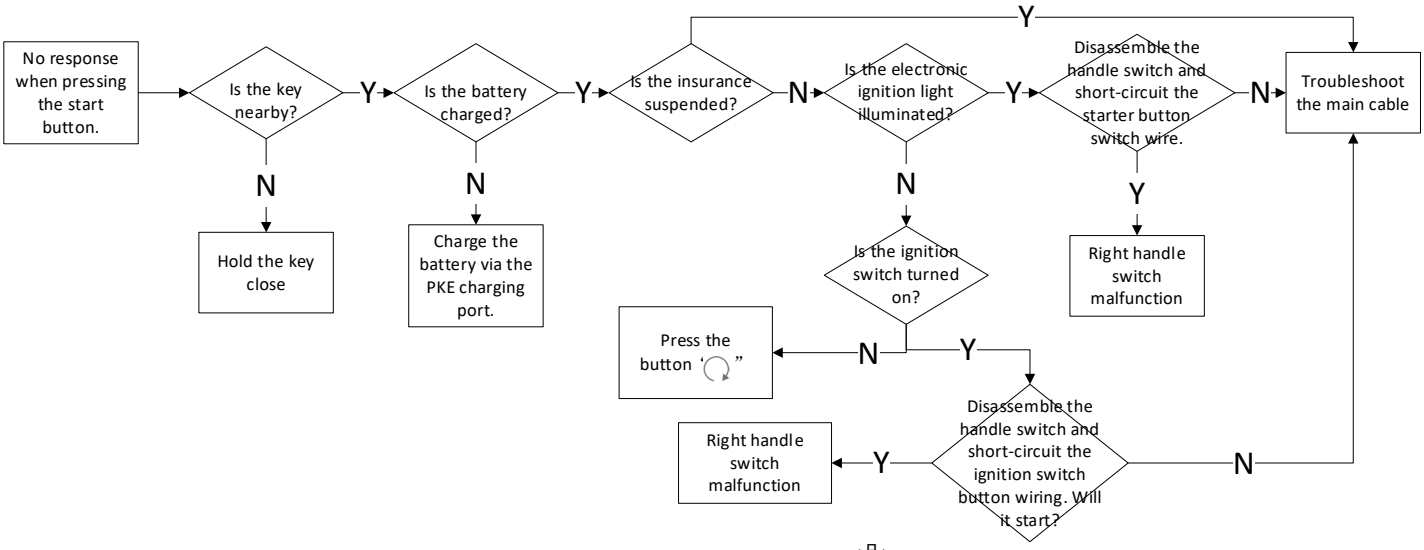

b.If the headlights do not illuminate when the light switch is turned to “☼”, check whether the light fuse has blown. If blown, inspect the wiring for faults. If the fuse is intact, disassemble the handlebar switch and short-circuit the light switch wires. If the lights illuminate, the switch is faulty; otherwise, investigate wiring or headlight issues.

4.2 Horn

Caution：

●When adjusting or inspecting the horn, allow at least 5 seconds between operations. Continuous sounding may cause internal coil burnout.

●The horn features a riveted structure; once disassembled, it is difficult to restore.

●Do not adjust bracket nut ③

a.If the horn switch does not respond, refer to the troubleshooting procedure for the left handlebar switch on the next page.

b.Abnormal horn sound

If the sound is weak or muffled, first verify battery charge level. Turn on the headlights and judge battery charge based on light intensity. If the horn sounds normal at high engine RPM but abnormal at low RPM, this also indicates insufficient battery charge. Recharge the battery.

If battery charge is sufficient, check whether horn adjustment bolt ① and nut ② are loose. If loose, tighten them and test again. If tightening does not resolve the issue, loosen nut ② and use a Phillips screwdriver to make minor adjustments to bolt ①. For no sound: turn counterclockwise approximately 270 degrees. For a hoarse sound: turn clockwise until sound is normal. After achieving normal sound, re-tighten nut ②. If the fault persists, the horn is faulty and needs replacement.

4.3 Lamp

Caution:

●When testing lights with test leads, be sure to distinguish between positive and negative terminals. Refer to the electrical schematic in the owner's manual for detailed wire colors.

Troubleshooting procedures for lighting fixtures are generally consistent. First, connect a test lead directly to a charged battery. If the fixture functions normally, investigate wiring or switch issues; if it fails, the fixture itself is likely defective. All lighting fixtures in this vehicle utilize LED technology. Fixture housings are typically ultrasonically welded or sealed with adhesive, and dis-assembly will compromise waterproof integrity.

●Ventilation holes are provided on the light fixture. In high-humidity environments, condensation may form inside the fixture. This generally does not affect operation and will dissipate automatically as humidity decreases.

●Keep the light fixture surface clean. Moisten a clean soft cloth with water and wipe gently. Change the cloth's position or rinse it with water after each wipe. Direct wiping may cause residual fine particles to scratch the surface.

General Troubleshooting Procedure for Lighting Fixtures:

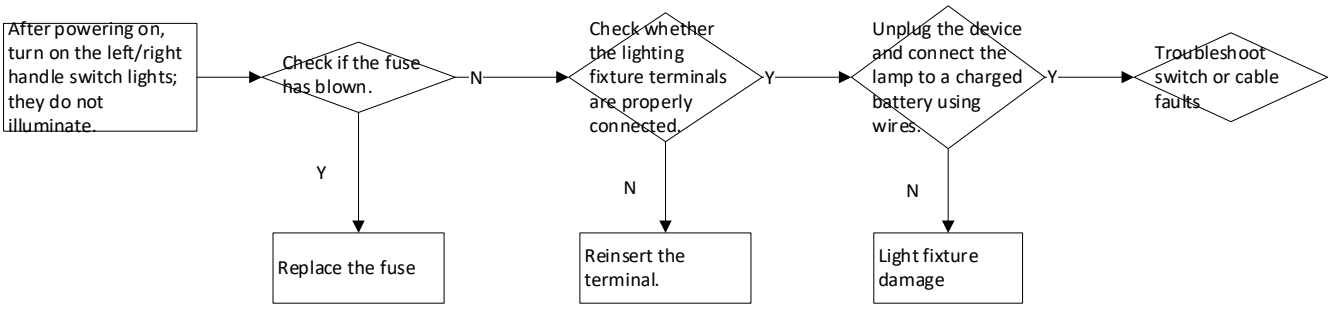

3. Electronic Fuel Injection System

Notice before service

1.The construction and operating principles of electronic fuel injection systems are relatively complex. Before inspecting and troubleshooting, it is essential to have a basic understanding of the working mechanisms and structural characteristics of various electronic fuel injection systems. The content covered in this chapter requires a certain level of maintenance experience. It is recommended to have inspections or repairs performed by a qualified repair facility.

2.Please maintain at least 3 liters (3.17 US quarts, 2.64 imperial quarts, 0.79 US gallons, 0.66 imperial gallons) of fuel in the tank. Failure to do so may impair the electronic fuel injection system's normal operation. Refuel promptly when the fuel gauge displays one bar.

3.Before starting the vehicle after it has been parked idle for more than 3 hours, first energize the entire vehicle. Turn on the ignition switch "", wait for the fuel pump to complete fuel pressurization, and then start the vehicle.

4.If multiple starting attempts fail, the engine may be flooded. Fully depress the accelerator pedal and press the start button for 3 seconds to execute the cylinder clearing procedure.

5.When the low battery voltage warning symbol flashes, recharge the battery promptly. Excessively low voltage may cause malfunctioning electronic fuel injection components, preventing starting, causing difficult starting, or resulting in insufficient power.

6.Reset the fuel injection system under these conditions: after reinstalling the battery, sudden power loss during operation, abnormal idle, or reinserting fuses. Procedure:

Turn on the ignition lock switch and the engine kill switch, squeeze the rear brake lever to start the engine. After 10 seconds, turn off the engine kill switch. Wait another 10 seconds, then turn the engine kill switch back on. Repeat this sequence two more times.

7.Precautions when inspecting or troubleshooting the electronic fuel injection system：

a.After energizing the system, do not arbitrarily disconnect components connected to the 12V power supply. This prevents self-inductance in electrical coils from causing instantaneous voltage spikes that could damage the ECU or sensors.

b.When a fault occurs, do not disassemble or inspect blindly. First, confirm that the mechanical components are functioning normally before proceeding to check the electrical control components.

c.Prioritize using a diagnostic tool to read fault codes or determine codes based on the flashing frequency of the malfunction indicator lamp (MIL) for targeted troubleshooting.

d.Carefully inspect all electronic fuel injection components for oxidation and ensure all connections are secure.

Tool：

MST—500P Diagnostic Tool	PT300 Electronic Fuel Injection Diagnostic Scanner（16PIN）	Multimeter

●Both diagnostic tools can read fault codes; the PT300 diagnostic tool can also flash programs.

8、Each vehicle operates under different conditions and maintenance histories, making it impossible to list every possible malfunction and troubleshooting procedure. Only some of the more common issues can be addressed here. Technicians themselves must possess a certain level of professional knowledge and accumulated experience.

9、Steps marked with "" on the right can be clicked to jump directly to the corresponding step.

WARNING

●Never turn on the ignition switch in a new vehicle or one running low on fuel. Ensure sufficient fuel is replenished before starting the engine, as the fuel pump may become damaged if it runs dry.

● Do not arbitrarily plug or unplug connectors from components. Never clean connectors directly with water. Always verify that connectors are properly seated after plugging or unplugging.

Fault Codes

Caution:

●When the vehicle is unlocked and the ignition switch is turned on but not started, the fuel injection fault light remaining illuminated is normal; if it does not light up, the vehicle cannot be started.

●After starting the vehicle, if the fault light illuminates indicating a fuel injection fault, this signifies an anomaly in the fuel injection system.

●Continuing to drive the vehicle when a fuel injection fault is reported may cause damage. Please contact an authorized repair facility or our authorized service center promptly for diagnosis and repair.

1.Read the fault code through the instrument

During engine operation, if the electronic fuel injection fault indicator light " " illuminates, it indicates a malfunction in the electronic fuel injection components that requires troubleshooting.

Fault codes can be directly read from the instrument menu → Fault Information page, or retrieved via the ZONTES Smart App.

ZONTES Smart App QR Code

2.Read the fault code through the diagnostic instrument

Power on the vehicle, remove the storage compartment cover, take off the OBD protective cover, connect the diagnostic tool, and read the fault codes.

NO	Fault Code	Fault Code Description	NO	Fault Code	Fault Code Description
1	P0030	Upstream Cylinder 1 Oxygen Sensor Heater Control Circuit Open	17	P0511	Idle actuator control circuit open
2	P0031	Upstream Cylinder 1 Oxygen Sensor Heater Control Circuit Voltage Too Low	18	P0563	System battery voltage too high
3	P0032	Upstream Cylinder 1 Oxygen Sensor Heater Control Circuit Voltage Too High	19	P0116	Engine coolant temperature sensor signal unreasonable
4	P0106	Intake Pressure Sensor/Barometric Pressure Sensor Unreasonable	20	P0117	Engine coolant temperature sensor circuit voltage too low
5	P0107	Intake Pressure Sensor Short to Ground	21	P0118	Engine coolant temperature sensor circuit voltage too high
6	P0108	Intake Pressure Sensor Short to Power Supply	22	P0122	Throttle position sensor circuit voltage below lower limit
7	P0112	Intake Air Temperature Sensor Signal Voltage Too Low	23	P0123	Throttle position sensor circuit voltage above upper limit
8	P0113	Intake Air Temperature Sensor Signal Voltage Too High	24	P0130	Upstream Cylinder 1 Oxygen Sensor Signal Irrational
9	P0134	Upstream Cylinder 1 Oxygen Sensor Circuit Signal Fault	25	P0131	Upstream Cylinder 1 Oxygen Sensor Signal Too Low
10	P0201	Cylinder 1 injector control circuit open	26	P0132	Upstream Cylinder 1 Oxygen Sensor Circuit Voltage Too High
11	P0261	Cylinder 1 injector control circuit short to ground	27	P0627	Fuel Pump Relay Control Circuit Open
12	P0262	Cylinder 1 injector control circuit short to power supply	28	P0629	Fuel Pump Relay Control Circuit Shorted to Power Supply
13	P0322	No RPM sensor pulse signal (open or short)	29	P0650	MIL Lamp Driver Stage Circuit Fault
14	P0480	Fan control circuit open	30	P2300	Cylinder 1 Ignition Coil Shorted to Ground
15	P0691	Fan control circuit short to ground	31	P0628	Fuel Pump Relay Control Circuit Voltage Too Low
16	P0692	Fan control circuit short to power supply			

3.Clear fault codes

Steps may vary depending on the brand or model. Therefore, please refer to the diagnostic tool manual for instructions on clearing fault codes.

CAUTION

●During engine operation, if the malfunction indicator light does not illuminate, but flashes after engine shutdown, this indicates a historical fault. It does not affect vehicle performance or lifespan and will automatically clear itself shortly.

EFI parts layout

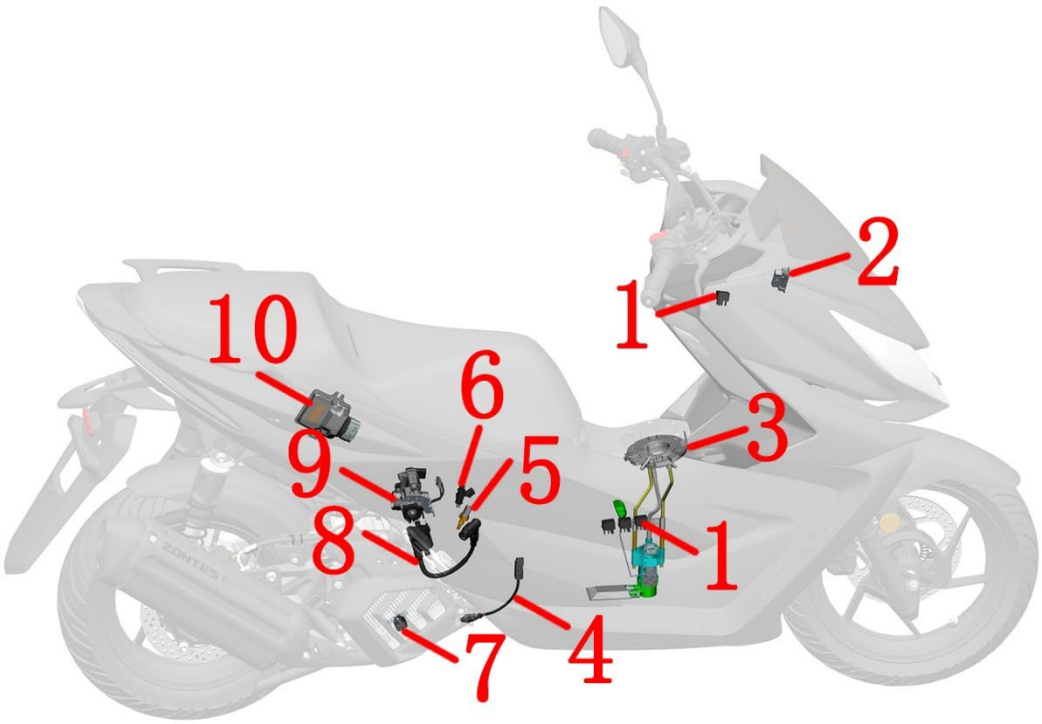

1	2	3	4	5	6
Electronic Fuel Injection Relay	OBD Diagnostic Interface (Main Cable)	Fuel Pump	Oxygen Sensor	Water-Oil Dual-Purpose Sensor	Fuel Injector
	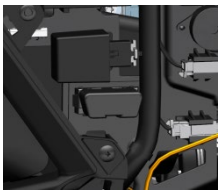				
7	8	9	10		
Crankshaft Position Sensor	Ignition Coil	Throttle Body	ECU		
*The throttle body assembly includes (sensor, idle control valve, stepper motor). The crankshaft position sensor is integrated with the stator of the magnetic generator.					

EFI schematic diagram

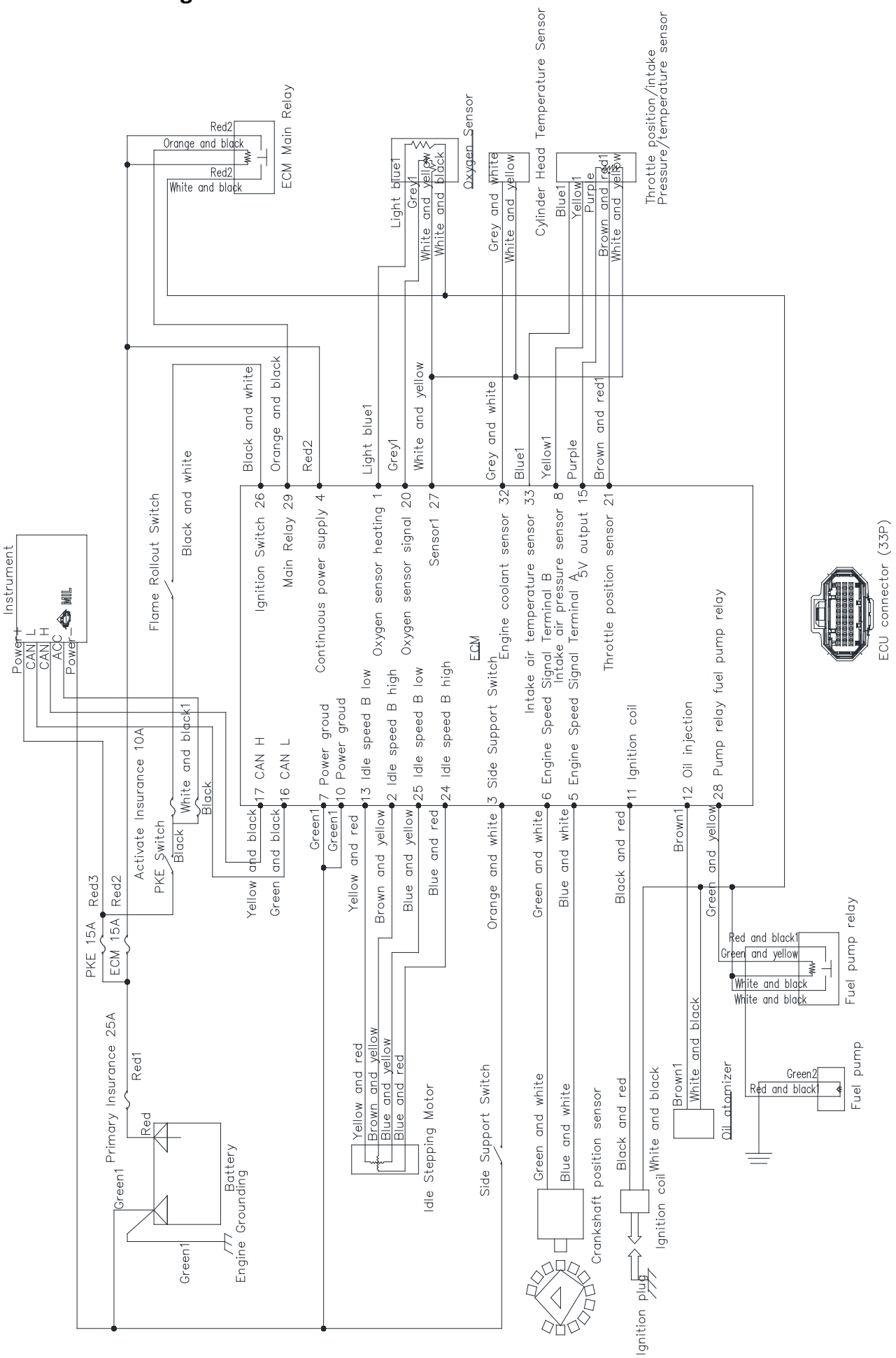

Fault diagnosis and troubleshooting of EFI parts

Caution：

●After disassembling any EFI components, the EFI system must be reset. Refer to the service information in this chapter for detailed instructions.

●Components such as the fuel pump, three-in-one sensor, stepper motor, and ECU are precision parts. Unauthorized disassembly may cause damage and will be considered user-inflicted, voiding the warranty.

● After removing the throttle body, seal the air filter outlet and intake manifold with a lint-free cloth or masking tape to prevent foreign objects from entering.

1.EFI relay

There is 1 relay above the right storage box. 3 relays are inside the right cover plate.

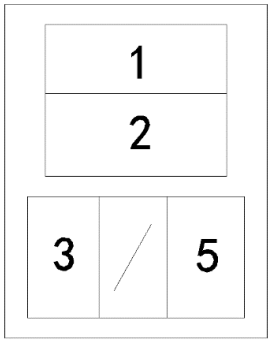

Cable Relay

Pins 3 and 5 are normally closed contacts and can be tested using the multimeter's continuity mode. Pins 1 and 2 are normally open contacts. If not, the relay is faulty.

2.OBD interface

The main cable comes with an OBD interface, located inside the front left storage box. It can be seen after opening the front left storage box lid..

Using the diagnostic tool via the diagnostic interface allows reading historical fault codes, current fault codes, clearing fault codes, and checking the ECU status.

3.Fuel Pump

Caution：

●The fuel pump is a precision component and must be assembled in a dust-free workshop with strict testing. Therefore, disassembly by untrained personnel is prohibited.

●This vehicle's engine is designed with a high compression ratio. It is recommended to use unleaded gasoline with an octane rating of 95 or higher for long-term use. To extend the vehicle's lifespan, always refuel at reputable gas stations.

●Do not operate the fuel pump in a dry state or underwater, as this will shorten its service life or cause severe damage. Ensure the positive and negative wiring of the fuel pump is correctly connected. Do not disassemble the inlet filter screen, as it may allow foreign objects to enter the fuel pump or clog the injector.

●When removing the fuel pump or high-pressure fuel line, work in a well-ventilated, dust-free, or minimally dusty environment. The work area must strictly prohibit open flames, smoking, or using mobile phones.

If the engine exhibits difficulty starting or fails to start, poor performance, unstable operation, injector failure, weak engine power, or degraded acceleration, inspect the fuel pump for abnormalities.

First, remove the seat cushion and storage box. Remove the two expansion nails indicated by the arrows. Then remove the middle cover of the fuel tank.

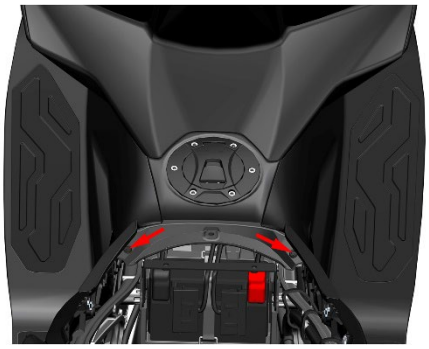

Use the 4# hex socket to remove 6 M5×45 bolts. Unplug the plugs of the fuel pump and the protective base plate. Remove the electronic fuel tank lock.

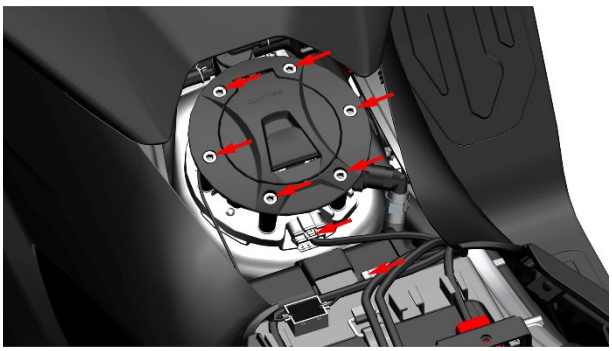

Press the high-pressure fuel pipe anti-disengagement clip and push the pipe in the direction of the arrow. Pull the tilt switch upward to remove it. Carefully detach the fuel pump afterward.

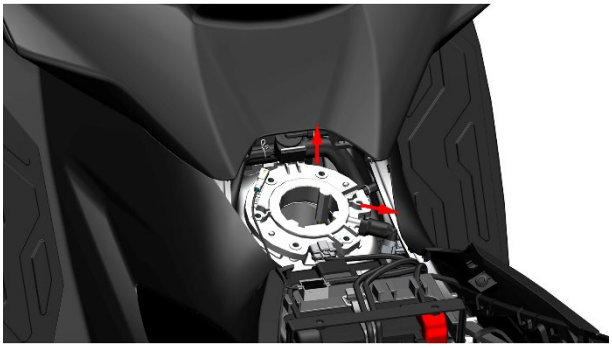

Note that you must not press the oil pipe indicated by the red circle.If damaged, the entire fuel pump assembly must be replaced. Avoid forcibly bending the float lever to avoid affecting the fuel level display.

When reassembling, first pre-tighten diagonally and then tighten the 6 bolts. Otherwise, the compression of the fuel pump's sealing gasket will be uneven, which can easily lead to leakage and create a safety hazard.

4.Oxygen Sensor

WARNING

●Ensure the engine and muffler are completely cooled before removing the oxygen sensor.

Pull the clip up along the oxygen sensor harness, locate the plug, then push it upward to dislodge it from the socket pin, before pulling it down and remove the oxygen sensor plug

When the vehicle's malfunction indicator light is on, displaying fault codes 0030, 0131, 0132, or 0134, perform the following checks:

Check if the oxygen sensor's appearance has been impacted by external force, broken, or if the plug is loose or fallen out. After confirming no issues, power off the device and unplug the oxygen sensor's connector. Check if the sensor's pins are bent or missing.

Turn off the vehicle, unplug the oxygen sensor, and measure the resistance between the two white wire pins. A normal sensor should show a resistance of 9±2Ω. If the resistance is infinite when fault codes 0131 or 0030 (oxygen sensor heater open circuit) are present, the sensor is faulty. Reconnect the plug after inspection.

When the vehicle reports fault code 0134 (oxygen sensor circuit signal fault), use a diagnostic tool to read engine parameters for judgment. Turn on the vehicle, activate the ignition switch (without starting the engine), idle, select the matching fuel injection system for the current vehicle model, and check the voltage parameter of the 1st cylinder oxygen sensor. Under normal conditions, the voltage should fluctuate between 0～1V. If the voltage remains unchanged for a long time, turn off the vehicle, remove the ECU plug, and check if there is any bending or missing pins on the ECU connector. If abnormalities are found, replace the ECU. Then, use a multimeter to check if there is continuity between the gray wire and white-yellow wire of the oxygen sensor plug and the corresponding gray wire and white-yellow wire pins on the ECU. If there is an open circuit, check if the cable is damaged or broken.

If the above trouble shooting does not meet the standard, replace this part. Otherwise, check if the cable connected to the sensor is damaged or broken.

Simple judgment method:

Remove the oxygen sensor and observe the color of the tip of its head. The normal color is light gray. If it is white, it indicates silicon poisoning damage and needs to be replaced. If it is black, it means there is carbon buildup, which can be cleaned and then continue to be used. If it is brownish yellow, it indicates lead poisoning and needs to be replaced.

5.Water and Oil Shared Sensor

First, remove the storage box by following the steps to disassemble it. Locate the water and oil shared sensor in the upper right front of the swaying frame, which is on the right side of the intake manifold. First, grip the top of the plug, press down the anti-pull card, and then pull the plug outwards.

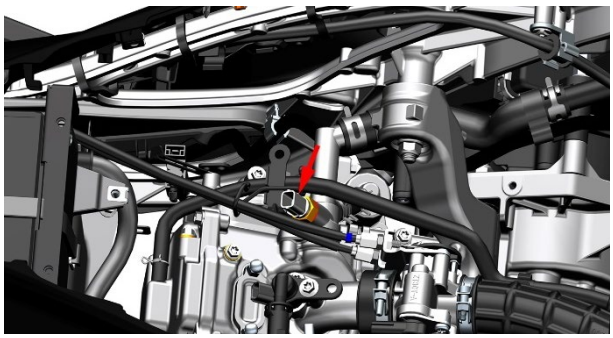

The normal cold resistance value between the two test points of the multimeter is 1.5~4.0kΩ.

Use a 17# spline wrench to remove the water-oil dual sensor by turning counterclockwise, then take off the 9×2 EPDM rubber O-ring. When reassembling, replace with a new O-ring to prevent leakage.

Standard torque: 13±1.5N.m (1.3±0.2 kgf.m, 10±1 lbf.ft)

When the vehicle's fault light is on and fault code 0116 is reported, check as follows:

Check if the temperature sensor has been impacted by external force, broken, or if the plug is loose or fallen out. After confirming no issues, disconnect the temperature sensor plug while the vehicle is powered off, and check if the sensor pins are bent or missing.

Power off the vehicle, disconnect the temperature sensor plug, and measure the resistance between the sensor pins (as shown in the figure). At 30℃, the normal resistance between the two pins of the temperature sensor is 1.74~1.89KΩ. The table of corresponding resistances for different temperatures is on the right. The temperature measured by the water temperature sensor is equivalent to the engine coolant temperature. Remember to reconnect the plug after checking.

When fault code 0116 is reported, it is an open circuit fault, so the detected resistance will be infinite, which requires replacement. Another situation is cable damage; in this case, the resistance may show normal, but the fault code cannot be cleared, so check if the cable is worn through.

If the above checks do not meet the standard, replace this part. Otherwise, check if the cable connected to the sensor is damaged or broken.

Temperature ℃	Resistance kΩ		
	MIN.	NOM.	MAX.
−30	23.4900	25.1600	26.9400
−25	18.1900	19.4300	20.7500
−20	14.2000	15.1300	16.1100
−15	11.1800	11.8700	12.6100
−10	8.8600	9.3910	9.9490
−5	7.0750	7.4800	7.9050
0	5.6870	5.9990	6.3260
5	4.6020	4.8430	5.0960
10	3.7470	3.9350	4.1310
15	3.0690	3.2160	3.3700
20	2.5280	2.6440	2.7650
25	2.0940	2.1860	2.2810
30	1.7430	1.8170	1.8920
35	1.4590	1.5180	1.5780
40	1.2270	1.2740	1.3220
45	1.0370	1.0750	1.1130
50	0.8798	0.9104	0.9417
55	0.7499	0.7748	0.8002
60	0.6419	0.6621	0.6828
65	0.5516	0.5682	0.5850
70	0.4759	0.4895	0.5032
75	0.4121	0.4232	0.4345
80	0.3581	0.3673	0.3766
85	0.3123	0.3199	0.3275
90	0.2733	0.2796	0.2859
95	0.2399	0.2451	0.2503
100	0.2113	0.2156	0.2199
105	0.1862	0.1902	0.1942
110	0.1646	0.1683	0.1721
115	0.1459	0.1494	0.1529
120	0.1297	0.1329	0.1362
125	0.1156	0.1186	0.1217
130	0.1033	0.1061	0.1090
135	0.0926	0.0952	0.0979
140	0.0832	0.0856	0.0881
145	0.0749	0.0771	0.0795
150	0.0676	0.0697	0.0719
155	0.0611	0.0631	0.0651
160	0.0554	0.0573	0.0591
165	0.0503	0.0521	0.0538
170	0.0458	0.0474	0.0491
175	0.0418	0.0433	0.0449
180	0.0382	0.0396	0.0411
185	0.0350	0.0363	0.0377
190	0.0321	0.0334	0.0346
195	0.0295	0.0307	0.0319
200	0.0272	0.0283	0.0294

6.Fuel injector

When the vehicle's malfunction indicator light is on and fault codes 0261 or 0262 are reported, check as follows:

1. Inspect the injector for any signs of external impact, cracks, and check if the plug is loose or fallen out. After confirming no issues, disconnect the injector plug while the vehicle is powered off, and check if the injector pins are bent or missing.

2. Power off the vehicle, disconnect the injector plug, and measure the resistance between the two pins. As shown in the figure, at 20℃, the normal resistance is 12.5±0.6Ω. If the measured resistance is infinite, it indicates an open circuit in the sensor (fault code 0261), and replacement is required.

3. After confirming the resistance is normal, if the fault persists, reseat the main relay of the vehicle to ensure the relay pins have no rust or fall off. Then use a diagnostic tool to clear the fault codes. If the fault still exists, use a multimeter to check if the brown wire of the injector cable plug is connected to the brown wire of the ECU cable plug. Also, ensure there are no missing or bent pins on the corresponding ECU connector.

4. If the above checks do not meet the standards, replace this part. Otherwise, check if the cable connected to the sensor is damaged or broken. The seat cushion and storage box need to be removed first.

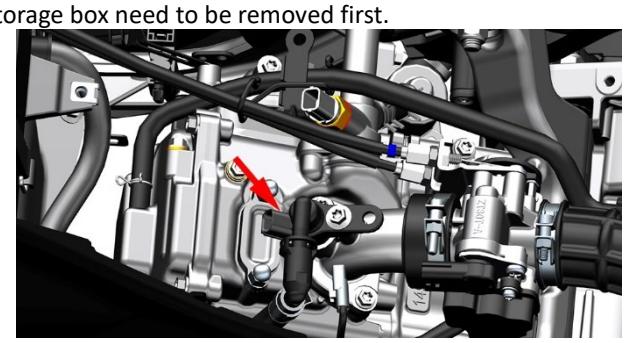

If you need to replace the fuel injector, it can only be done after the engine and muffler have cooled down. Place an oil pan at the bottom, then pull out the high-pressure fuel line from the fuel pump end following the steps for removing the high-pressure fuel line, allowing any residual fuel to drain. Use an 8# socket to remove the M6×20 bolt, take off the fuel injector holder, and then the fuel injector can be removed. Note that before reassembly, check if the seal ring is missing or aged; it is recommended to use it only once. The inner diameter of the seal ring is approximately 6.5mm, and the wire diameter is approximately 2.5mm; it needs to be purchased from other sources.

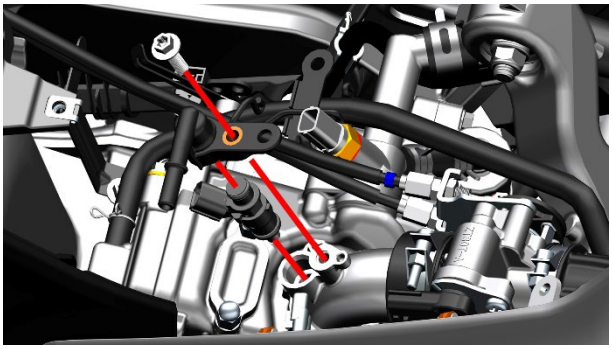

Fuel Injector Installation Requirements

During installation and removal, strictly follow the following method to avoid damage. Apply a small amount of lubricant to the lower side of the seal. Avoid using ISO 10 light mineral oil or equivalent products. If conditions permit, applying the lubricant to the inner bore of the injector holder is more effective, which helps minimize the probability of injector contamination. Do not allow the nozzle end face to come into contact with the lubricant, as it may affect the fuel injection volume. It is prohibited to dip the injector end face in the lubricant. It is recommended to avoid reusing seals; be sure to carefully check for any damage to the seals. Due to the high fuel pressure, even extremely minor damage can cause leakage. When installing, carefully push the seal into the holder.

When installing the fuel injector connector, be careful not to damage the connector or cause the pins to bend or deform. When a clicking sound is heard, it indicates that the installation is in place. Avoid unnecessary disassembly and reassembly of the connector. When installing the fuel injector connector, do not rotate the fuel injector, as this can cause the fuel injection target to shift.

7. Crankshaft Position sensor

When the engine fails to start or is difficult to start; when acceleration is poor and idle is unstable; or when intermittent stalling occurs, the crankshaft position sensor should be checked for normal operation. The crankshaft position sensor is installed in the right crankcase cover integrated with the magneto stator. Locate the connector at the rear of the right fuel tank on the vehicle body. Use a multimeter to measure the resistance of the crankshaft position sensor, which should be 280±20Ω at 25℃ (77°F); if not, it should be replaced.

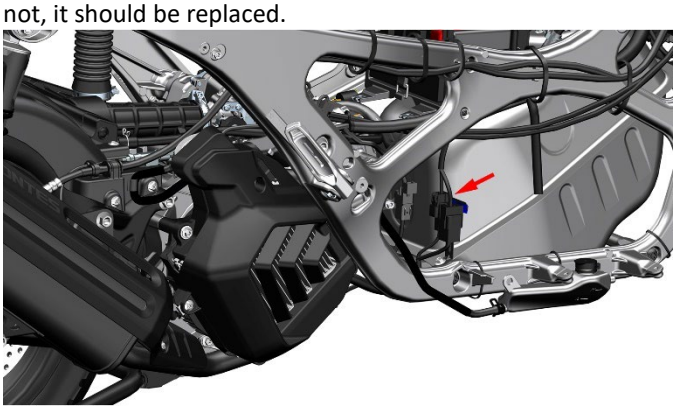

Remove the water shield bolts with an 8# socket, then remove the water shield and grommet. Use a multimeter to measure the phase-to-phase resistance between any two terminals of the three-hole plug of the magneto stator, which should be 0.3±0.25Ω at 25℃ (77°F).

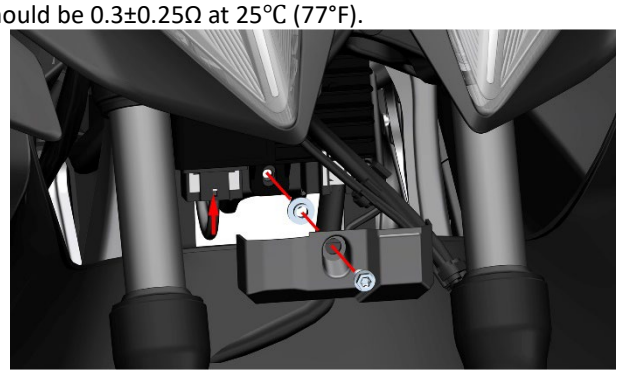

8.Ignition Coil

When the vehicle's malfunction indicator light is on, fault code 2300 is reported, and the vehicle is difficult to start, fails to ignite, stalls at idle when warm, and cannot reach high RPM, check as follows:

1.Check if the ignition coil body has been impacted by external force, cracked, and if the plug is loose or fallen out. After confirming no issues, turn off the vehicle and disconnect the ignition coil plug. Check if the ignition coil pins are bent or missing.

2.Turn off the vehicle, disconnect the ignition coil plug, and measure the resistance between the pins of the white plug. The normal resistance between pins 1 and 2 of the ignition coil is 2.7±0.2Ω. Remember to reconnect the plug after checking.

3.If the above inspection does not meet the standard, this part needs to be replaced. Otherwise, please check if the cable connected to the sensor is damaged or broken. If the ignition coil needs to be replaced, follow the steps below: First, remove the seat cushion and the storage box. Then, find the plug in front of the throttle body valve and unplug it.

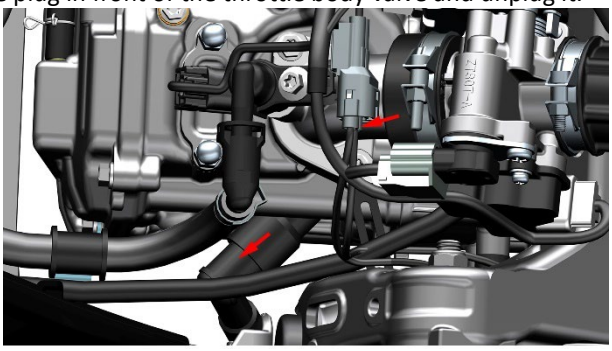

Remove the M6 nut with a 10mm socket, then remove the ignition coil.

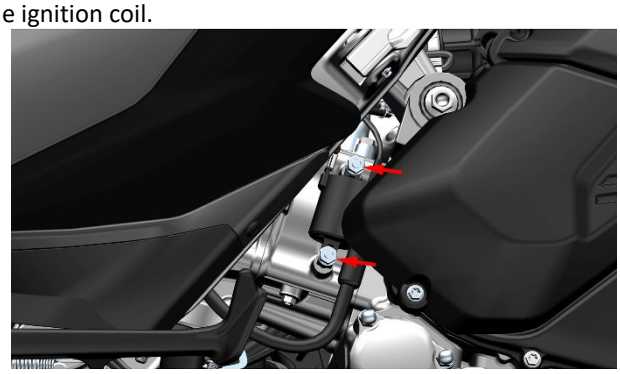

9.Throttle body

The disassembly and assembly of the throttle valve body can be found in the "Maintenance and Repair" section on the throttle valve body.

When the vehicle's malfunction indicator light is on, fault codes 0505 or 0511 are reported, or the vehicle's idle speed remains persistently too high or too low, check as follows:

1. Inspect the stepper motor for any signs of external impact, cracks, or damage. Check if the connector is loose or disconnected. After confirming no issues, disconnect the stepper motor connector while the vehicle is powered off, and check if the motor pins are bent or missing. Reconnect the connector after inspection.

2. Measure the resistance between terminals A and D, and between B and C of the stepper motor. The normal sensor resistance should be 93±2Ω. Note that the measured value may vary slightly with the current temperature of the stepper motor. Remember to reconnect the connector after measurement.

3. Power on the vehicle, turn on the ignition switch (without starting the engine), and use a diagnostic tool to read engine parameters. Select the matching fuel injection system for the current vehicle model, then check the current stepper motor step count. Start the engine and let it idle; as the temperature rises, the stepper motor step count will gradually decrease from a higher value until it stabilizes within a small fluctuation range.

4. If the above checks do not meet the standards, replace this part. Otherwise, check if the cable connected to the stepper motor is damaged or broken.

Note: This sensor is installed on the throttle body, which is located between the air filter and the engine.

Additional situations that may occur when the sensor fails, besides the malfunction indicator light being on:

1. High idle speed; after accelerating, the RPM does not return to idle speed. Check if the stepper motor step count at this time is consistent with normal idle speed. If it is higher, reset by turning the vehicle off and on again.

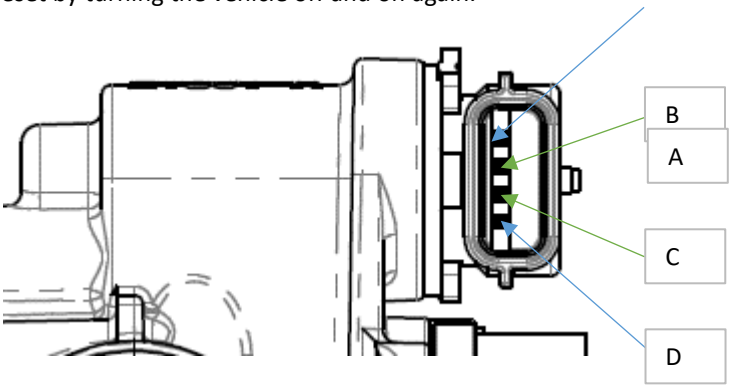

10.Engine Controller (ECU)

When the engine fails to start or performs poorly, it is necessary to check whether the ECU is functioning properly. First, it should be confirmed whether the problem is caused by calibration or software issues. If so, attempting to reflash the program can be considered. If it is a hardware issue, the only solution is to replace it. Since the ECU is rather complex and difficult to diagnose, the elimination method is generally adopted. That is, removing the ECU from a normally functioning vehicle of the same model and replacing it on the faulty vehicle.

Remove the ECU by removing the bolts with a T25 Torx wrench. While pressing the latch with your thumb, pull firmly outward to unplug the ECU connector..

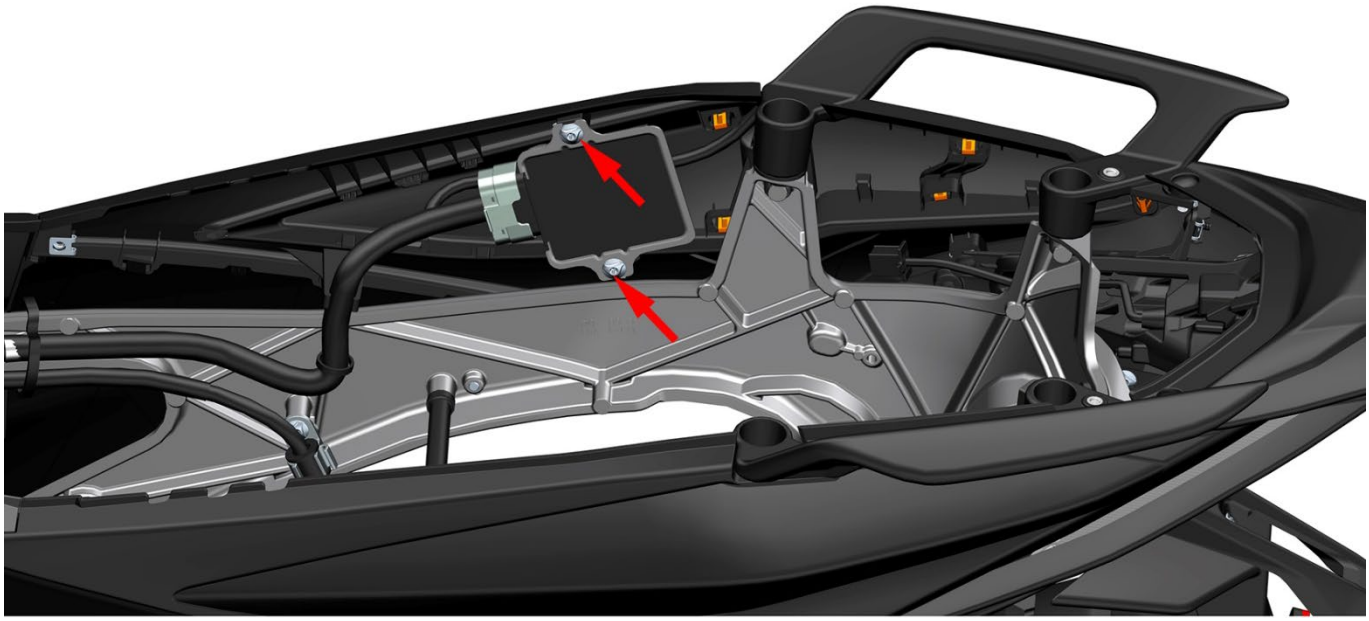

Caution:

1. Do not place the engine controller (ECU) near high-temperature parts or in their vicinity.
2. Keep it away from any liquids.
3. Do not allow other objects to cover the ECU surface to avoid affecting heat dissipation.

Engine cannot start and there is no sign of starting fault diagnosis process

When pressing the start button can drive the engine to run normally, but the engine does not work properly and there are no signs of starting, refer to the diagnostic process below to identify the cause of the fault.

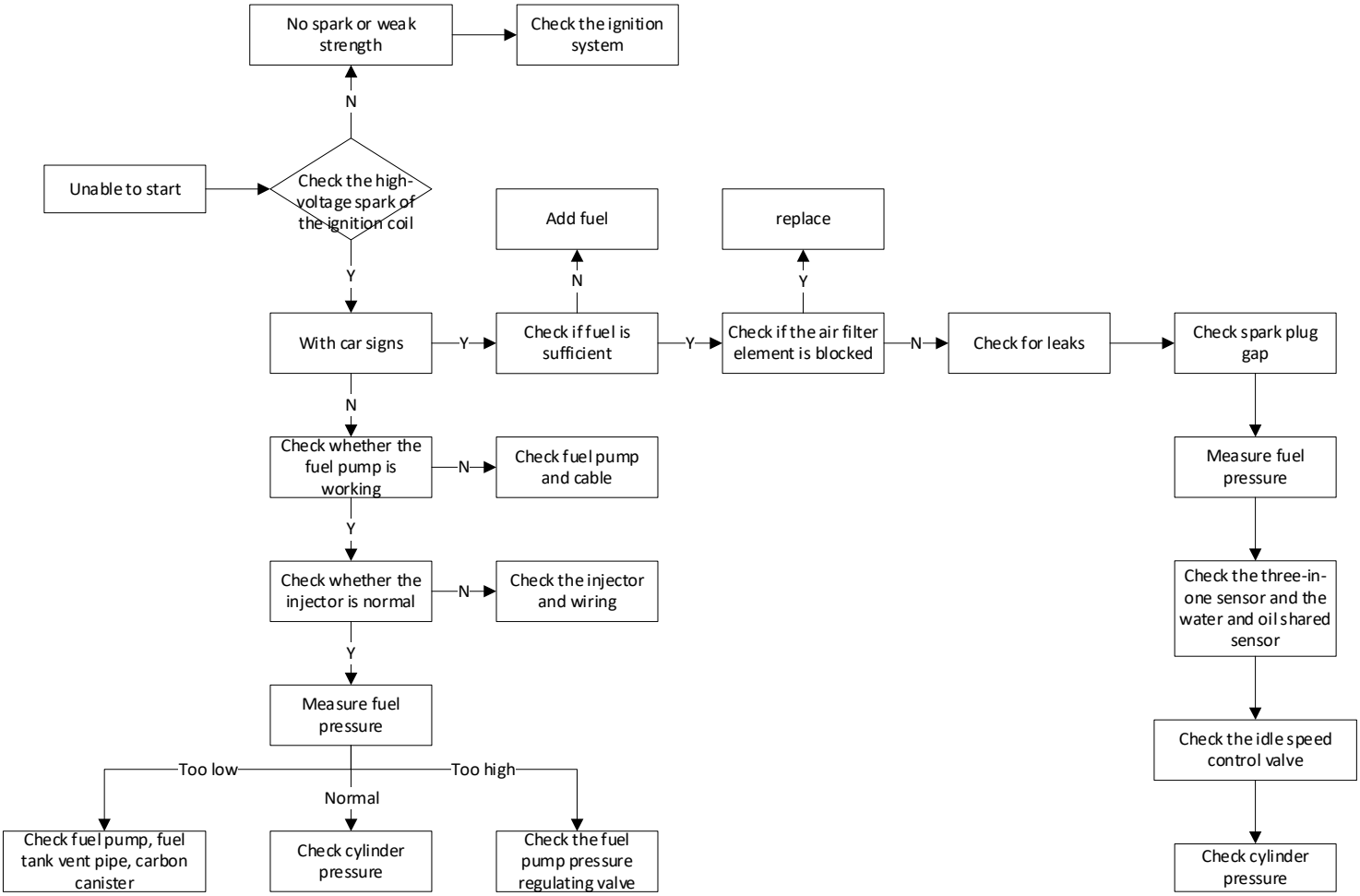

Engine cannot start with motorcycle fault diagnosis process

When you press the start button to get the engine running normally and there are signs of a car but it doesn't start, you can refer to the diagnostic process below to identify the cause of the fault.

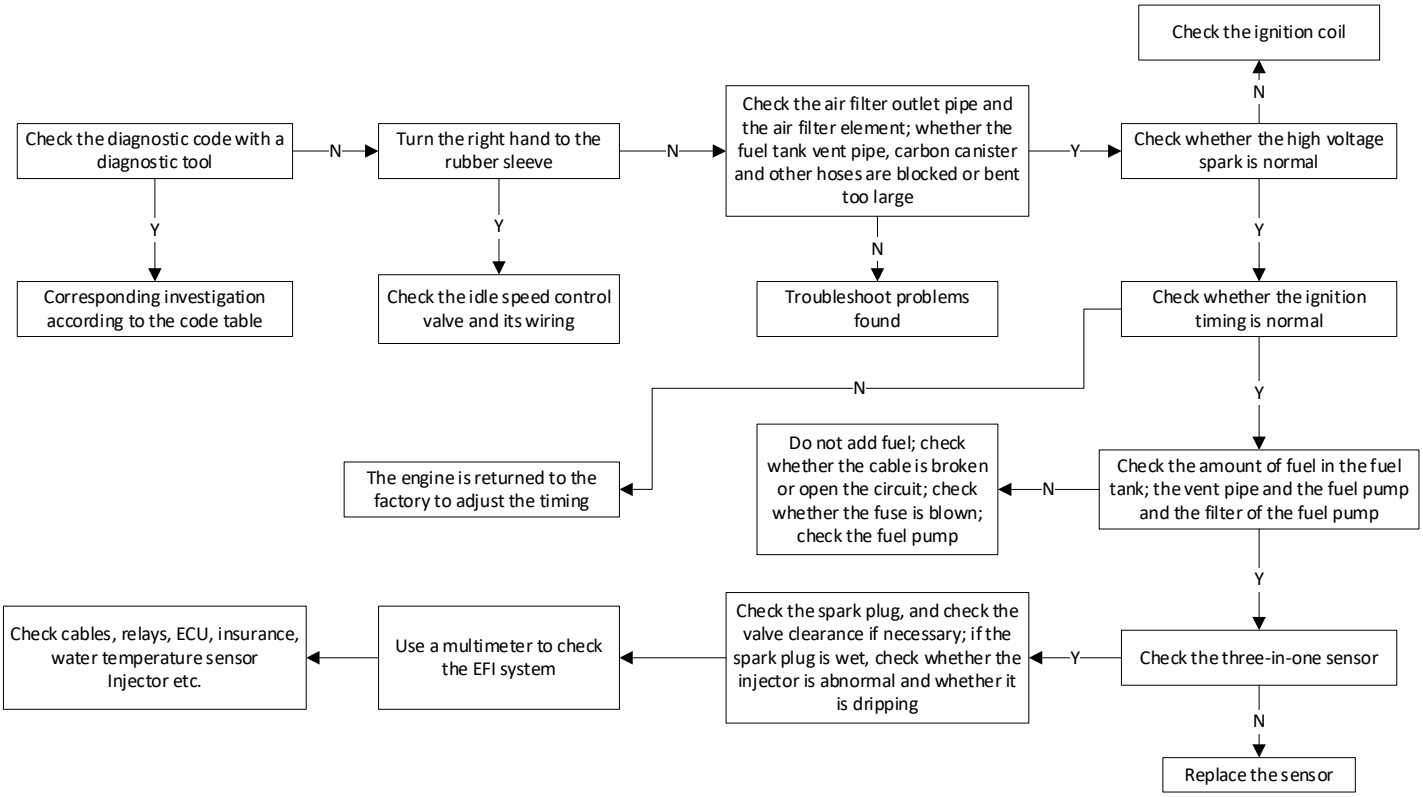

Insufficient engine power diagnostic procedure

When the throttle is turned, the engine shows power lag and slow acceleration; Refer to the diagnostic process below to identify the cause of the fault.

High idle speed on hot motorcycle

When the vehicle is cold, it can run at a normal fast idle speed, and the idle speed does not drop back to 1500-1700 RPM after warming up, refer to the diagnostic process below to identify the cause of the fault.

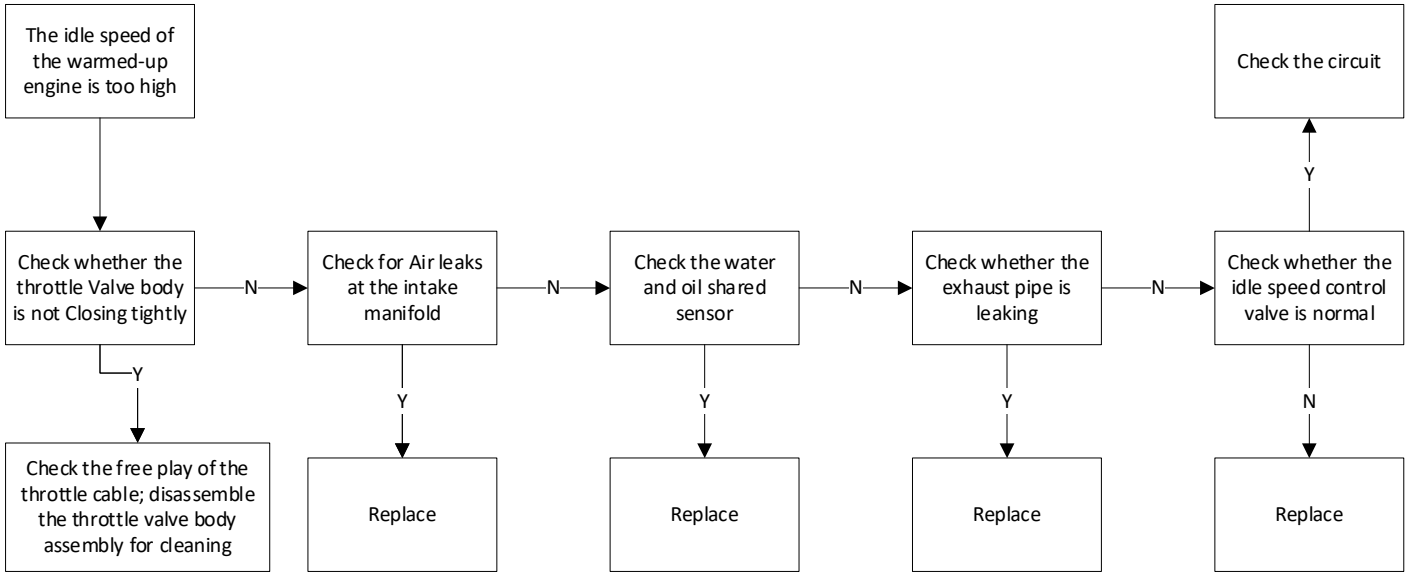

Cooling motorcycle idling unstable

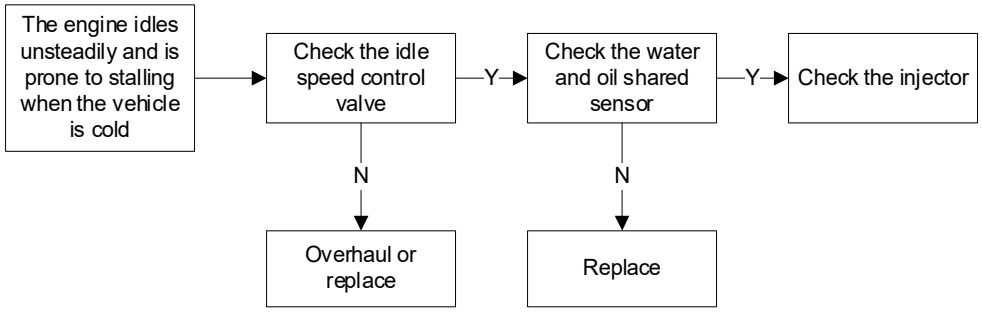

Unstable idling speed, easy to stall

The engine is running at an unstable idle speed, prone to stalling, and can return to normal after warming up. Refer to the diagnostic process below to identify the cause of the fault.

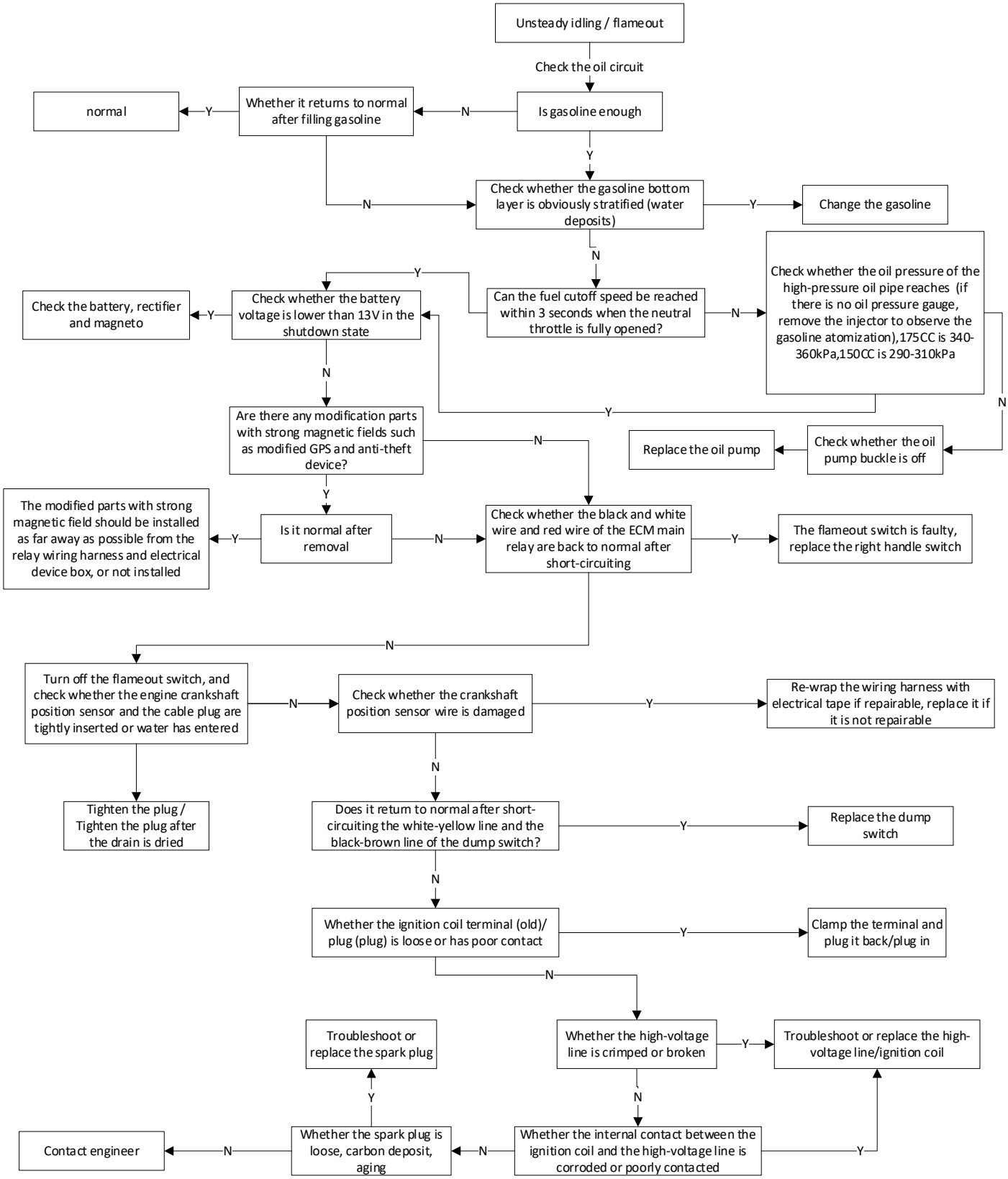

EFI fault indicator light always on analysis flow chart

If you encounter a situation where the fuel injection fault indicator light "" is constantly on, first check if the plugs of each fuel injection sensor are loose

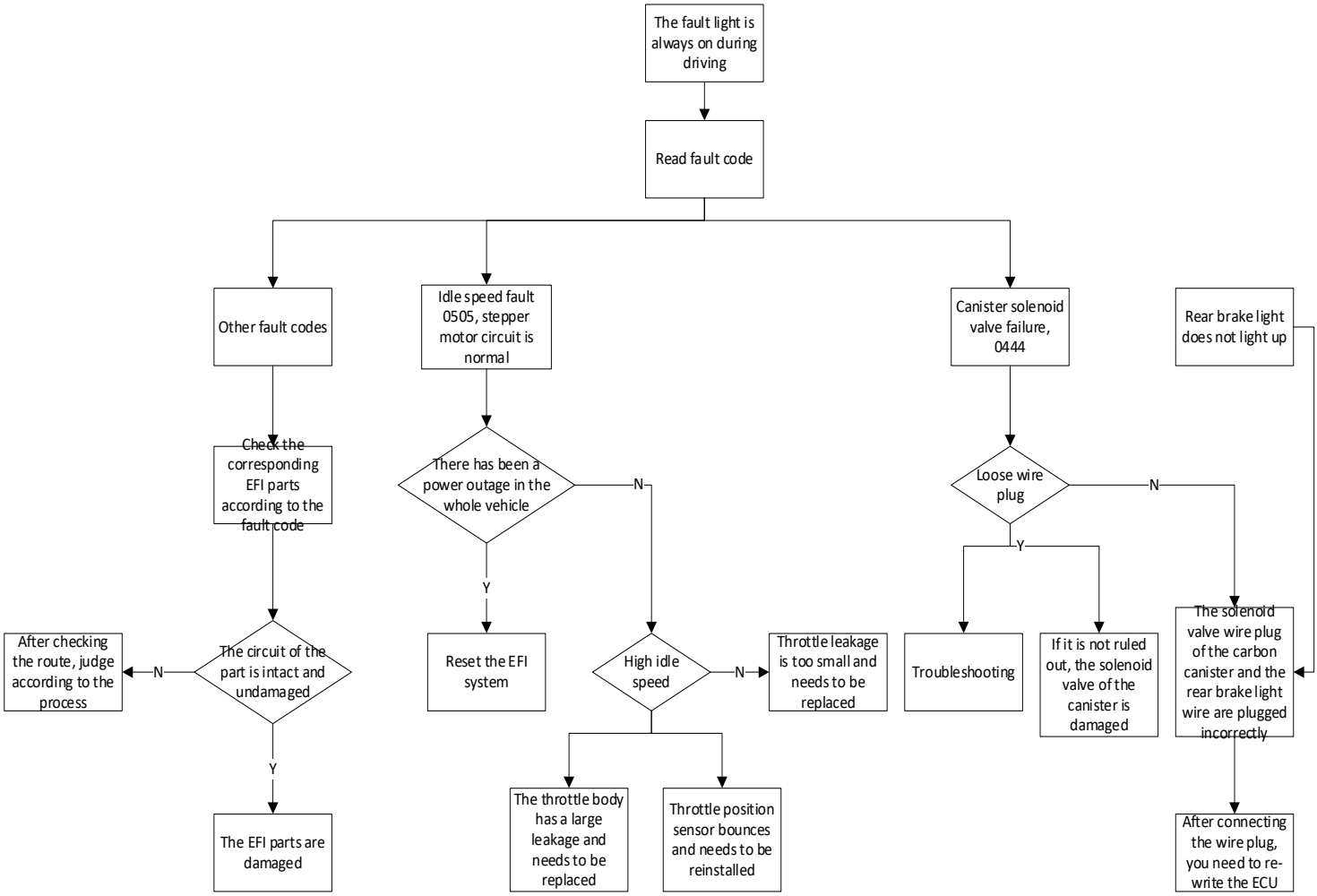

4.Ignition system

Notice before service

1. The content of this chapter requires certain maintenance experience. It is recommended to have the inspection or maintenance done at a qualified maintenance unit.

2. After power-on, do not remove the components connected to the 12V power supply at will to avoid the self-induction of the coil in the electrical appliance causing a momentary voltage that damages the ECU or sensor.

3. Use spark plugs with the correct heat value. Spark plugs with an inappropriate heat value may damage the engine.

4. Faults in the ignition system are commonly caused by poor plug connections and corrosion of the terminal blocks. These two items should be checked first.

5. Since the ECU is factory preset, the ignition timing cannot be adjusted. If the ignition timing needs to be adjusted, it can only be done by returning to the factory for repair.

6. Ensure that the battery is fully charged. If the battery is not fully charged, it may cause slow starting, weak spark plug sparks or no sparks at all.

Tool：

Multimeter

7. The driving conditions and maintenance status of each vehicle are not the same, so it is impossible to list all the fault phenomena and troubleshooting processes one by one. Only some common faults can be listed. Maintenance personnel themselves also need to have certain professional knowledge and an accumulation process of experience.

8. Before disassembling the spark plugs, use a blower gun to clean up the surrounding debris, dust, etc. After disassembly, the spark plug holes should be blocked to prevent foreign objects from falling into the engine.

9. If there is a " " symbol on the right side of a step, you can click to quickly jump to the corresponding step.

WARNING

•Do not randomly plug or unplug the components and do not directly wash the plugs with water. Make sure to plug and unplug correctly.

Troubleshooting

Check the following items before diagnosing the ignition system

A. Check whether the spark plug is abnormal;

B. Check whether the ignition coil high voltage cap or plug is loose;

C. Check whether the high pressure cap is flooded.

D. If there is no spark, first find the ignition coil of the same model to confirm that there is no fault and install it on the faulty car to test whether there is a spark;

E. Check whether the "initial voltage" of the ignition primary coil is consistent with the battery voltage when the unlocked vehicle turns the flameout switch to "" and does not start the engine.

Spark plug no spark

1. Improper spark plug clearance

If the gap is too small, the electrode has a "flame suppression" effect to inhibit the formation of flame, and the spark intensity is weak; if it is too large, the ignition voltage will lead to no spark. Adjust the 125/150V setting to the standard range of 0.7～0.8mm (0.028-0.031 in). The standard value for 175V is 0.8～0.9mm (0.031～0.035 in).

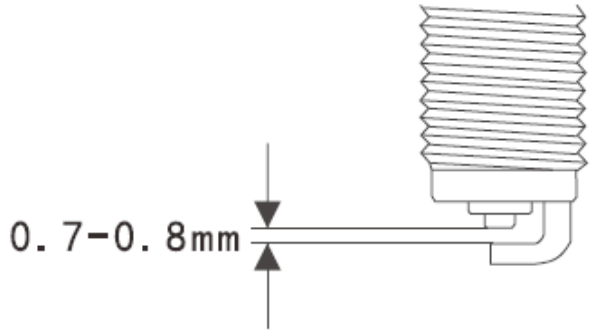

125/150V

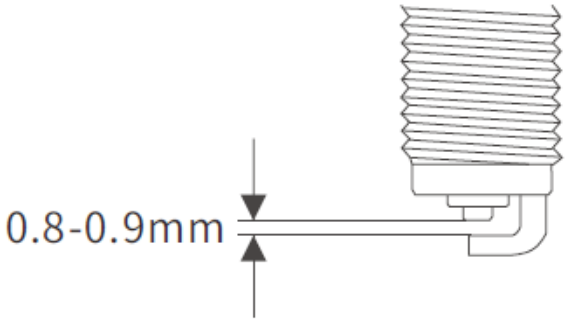

175V

2. An oil film is attached to the surface of the spark plug electrode

Oil or gasoline enters the combustion chamber and adheres to the surface of the electrodes, causing the electrodes to short-circuit and cause no sparks. Oil usually enters from the gap between the piston and the cylinder wall and the valve duct. Check whether the gap is normal, and replace the corresponding parts if it is abnormal. The accumulated gasoline may be caused by the rich mixture when the cold engine is started. You can clean it first and then try to ignite it.

3. The spark plug skirt is damaged.

The high voltage current breaks through the leakage from the broken part of the skirt, and the spark plug needs to be replaced.

4. The electrode has carbon deposits, and the center electrode leaks electricity to the surrounding area without discharging to the electrode

Excessive accumulation of carbon or oil on the electrode causes a short circuit; and may cause insulator to burn out. Clean the carbon deposits or replace the spark plug.

5. Electrode damage

The center electrode is damaged by electrical spark corrosion or chemical corrosion of combustion gas for a long time, resulting in electrode damage; it needs to be replaced.

6. Spark plug insulation is reduced

Decreased insulation will weaken the ignition voltage, resulting in weaker or no spark; replacement required

7. Ignition coil high voltage wire short circuit

Ignition coil needs to be replaced

8. The battery power is insufficient

If the spark strength is weak or no spark due to insufficient power, charge it with a charger. Or ride long distances to charge.

9. ECU failure

After eliminating the above reasons, the good ECU can be removed from the same type of vehicle and replaced with the faulty car for judgment.

Starting system layout

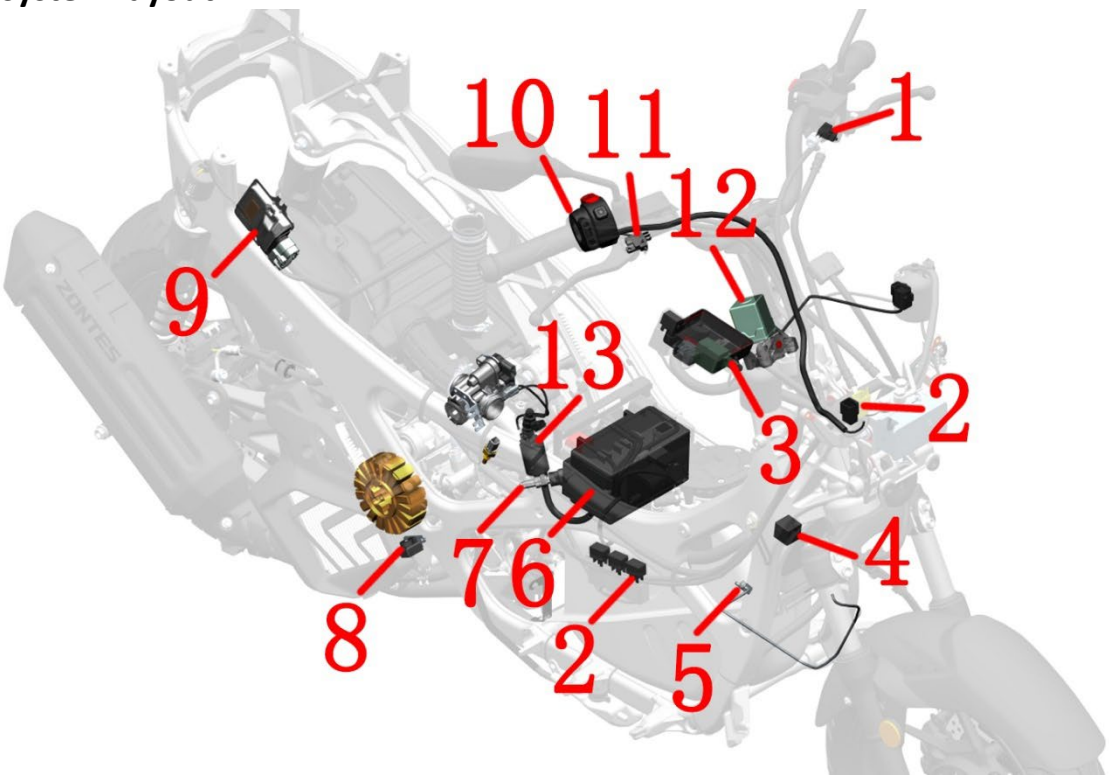

1-Rear brake switch 2-Relay 3-PKE host 4-Start relay 5-Side bracket flameout switch 6-Battery body 7-Spark plug 8-Crankshaft position sensor 9-Engine controller (ECU) 10-Right hand handle switch 11-Front brake switch 12-Faucet lock 13-Ignition coil

Remark：

●The fuse box comes with the main wiring harness, and there are 2 in total. For detailed diagrams, please refer to the "EFI Parts Layout" in the chapter "EFI System" of this manual.

●The magneto stator and crankshaft position sensor are integrated into one part and cannot be replaced separately. For details on the troubleshooting of the crankshaft position sensor, please refer to the crankshaft position sensor section of "Fault Diagnosis and Troubleshooting of EFI Parts" in the chapter "EFI Systems" of this manual.

Ignition system electrical schematics

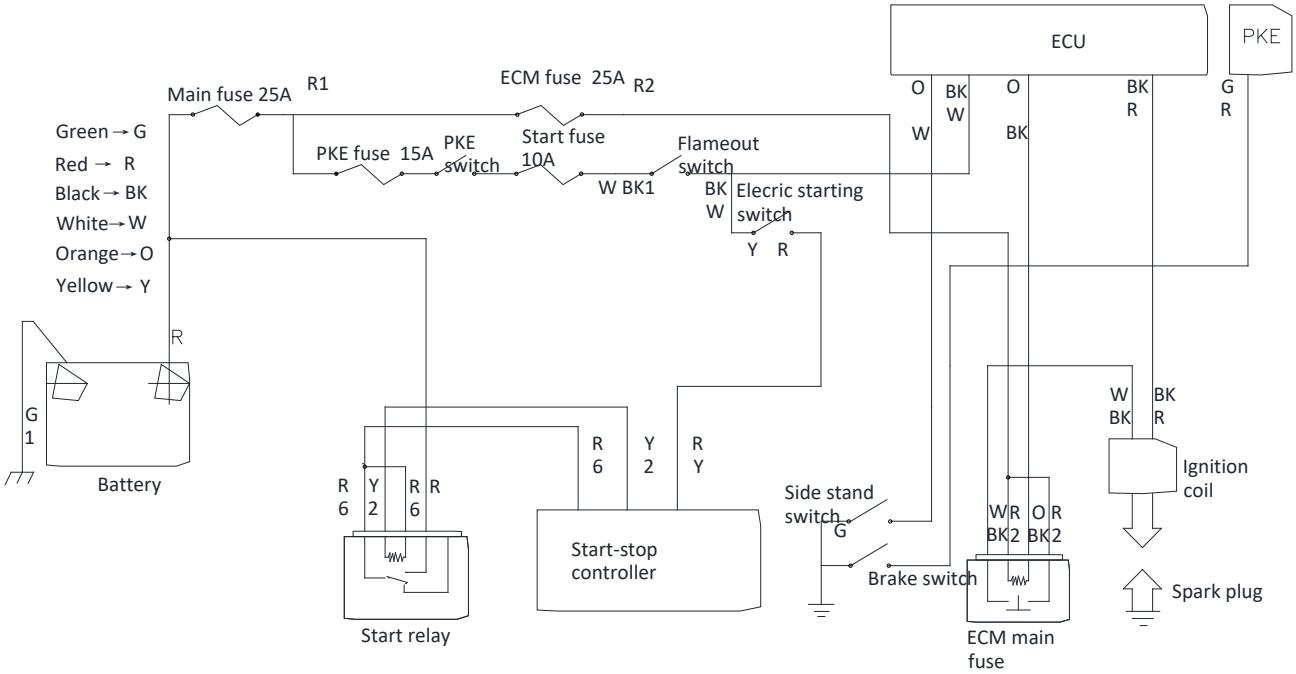

Ignition system inspection

Caution：

●If there is no spark in the spark plug, check all cable connectors for loose or poor contact before checking the ignition system.

●Use a high-precision digital multimeter.

The ignition coil test method is detailed in the ignition coil section of "Fault Diagnosis and Troubleshooting of EFI Parts" in the chapter "EFI Systems" of this manual.

Pull out the high-voltage cap, find a spark plug of the same type that is confirmed to be free of abnormalities, and install it on the high-voltage cap near the cylinder head cover for ignition test to confirm whether the ignition coil is faulty.

Check for abnormalities by referring to the crankshaft position sensor section of "Fault Diagnosis and Troubleshooting of EFI Parts" in the chapter "EFI Systems" of this manual.

Ignition coil

Ignition coil disassembly and testing methods are detailed in this manual "EFI System" chapter "Fault Diagnosis and Troubleshooting of EFI Parts" in the ignition coil section.

5. Starting system

Notice before service

1. It may not be possible to start the engine quickly when the battery is low, or the ignition current cannot be provided.
2. Check or repair the starting system by referring to the steps in the troubleshooting process.
3. If there is a " " symbol on the right side of the step, you can click to quickly jump to the corresponding step.

WARNING

●When the engine cannot be started, do not press the electric start button frequently. Frequent operation will cause flooding of the cylinder, battery feeding, etc.

Troubleshooting

Caution：

●Make sure that the battery is fully charged and in good condition, and that the battery and cable terminals are firmly connected.

●Check whether the main fuse (25A) and ECM fuse (15A) are blown. If the new fuse is burned, the line fault needs to be checked first.

●Use the diagnostic instrument to read the fault code. Troubleshoot according to the prompted code.

●Use the ECU of a normal vehicle of the same model to determine whether it is faulty.

●Check the ignition system. Focus on checking whether the high-voltage wire and spark plug are firmly connected or damaged. Check the starting relay and start-stop controller.

●Check the fuel supply system. Focus on checking fuel pump relays, crankshaft position sensors, fuel pumps, high-pressure YouTube, etc.

●Determine whether the cylinder has been flooded. Screw the throttle to the bottom and press the start button for 3 seconds to perform the cylinder cleaning procedure.

●Check whether the crankshaft position sensor clearance is too large.

Starting system layout

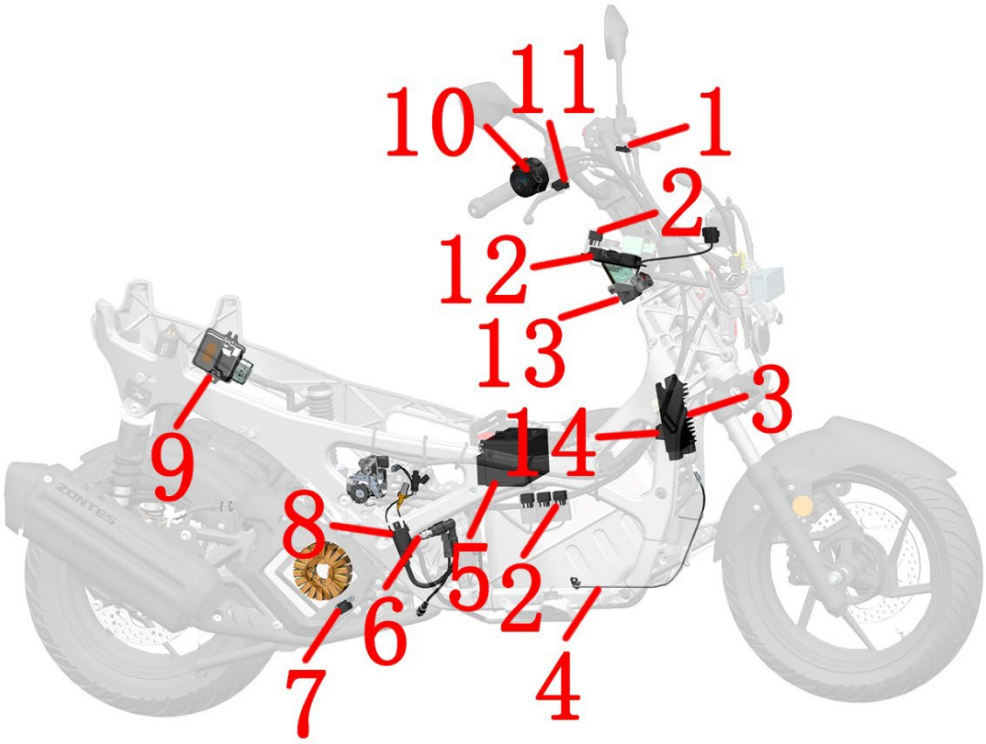

1-Rear brake switch 2-Relay 3-PKE host 4-Start relay 5-Side bracket flameout switch 6-Battery body 7-Spark plug 8-Crankshaft position sensor 9-Engine controller (ECU) 10-Right hand handle switch 11-Front brake switch 12-Faucet lock 13-Ignition coil

Starting system electrical schematics

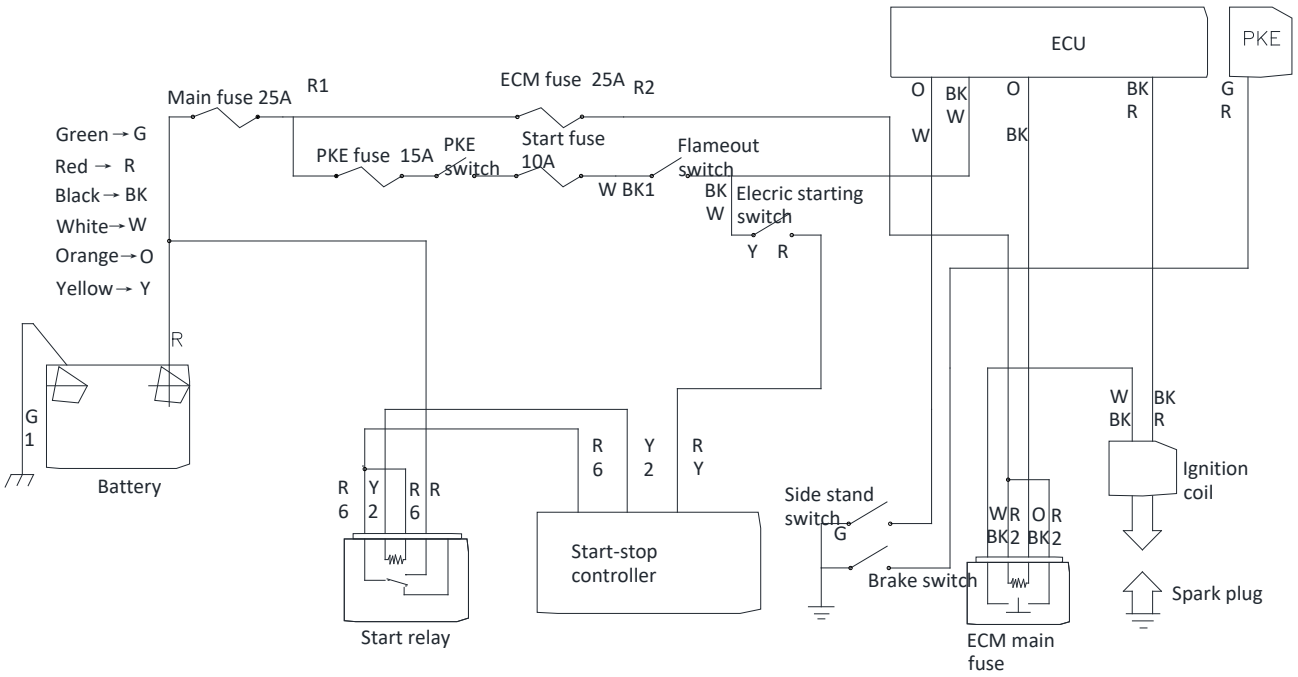

For start-stop instructions and fault instructions, please refer to the PDF version of the "User Manual"

Starter relay

The starter relay can be seen after removing the middle of the tank.

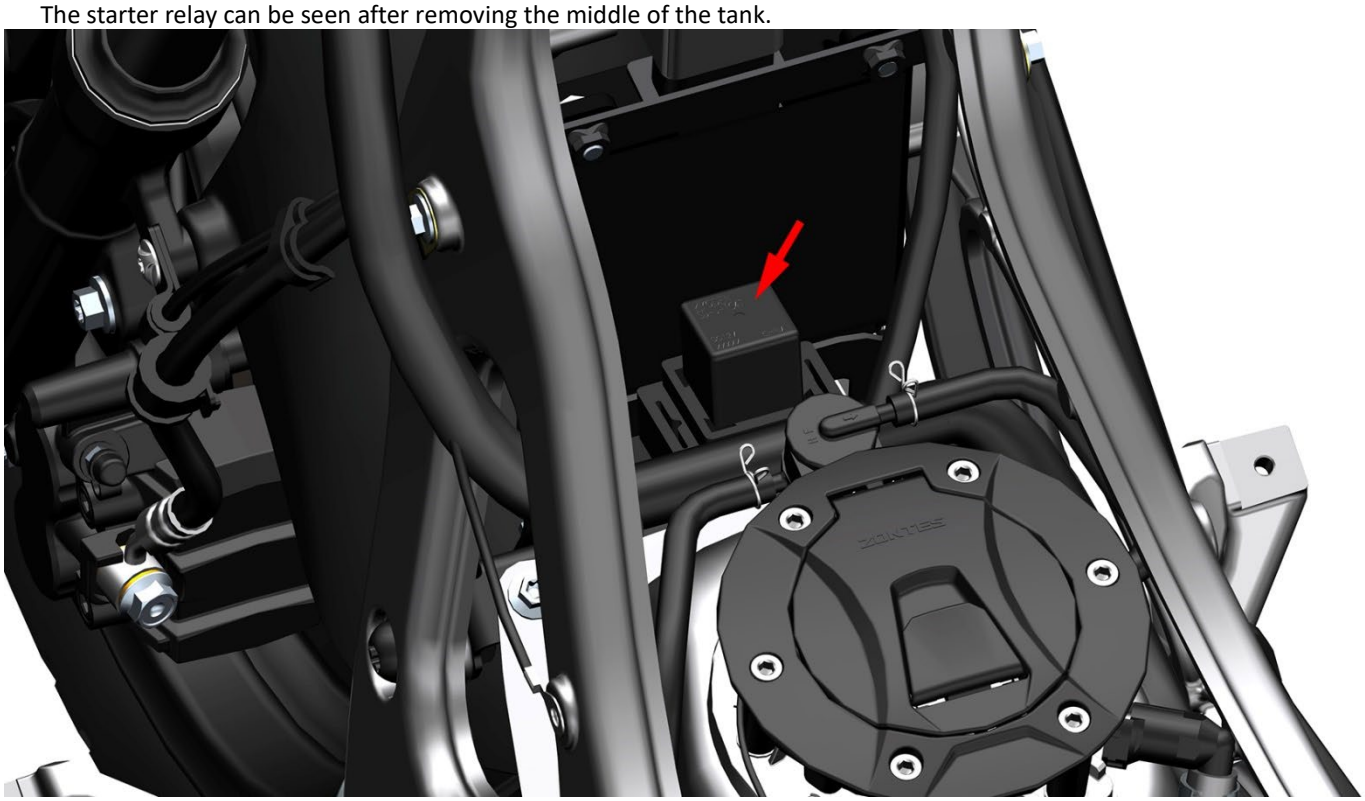

Starting relay rated voltage DC 12V, operating temperature -40~ + 85 ℃, operating voltage DC4.6~ 7V (20 ℃), return voltage DC1.2~ 4.2V (20 ℃), coil current below 0.2A (12V 20 ℃). Insulation resistance DC500V megohmmeter 20MΩ or more.

The detection methods are as follows:

After unplugging the relay, use the buzzer of the multimeter to measure pins 87a and 30. At this time, the buzzer of the multimeter rings; when connecting pins 30 and 87, the buzzer should not ring. Connect pins 85 and 86 to the battery or DC12V power supply using wires, and the buzzer of pins 87a and 30 should not ring; the buzzer of pins 87 and 30 should indicate that the relay is normal, otherwise it is abnormal and needs to be replaced.

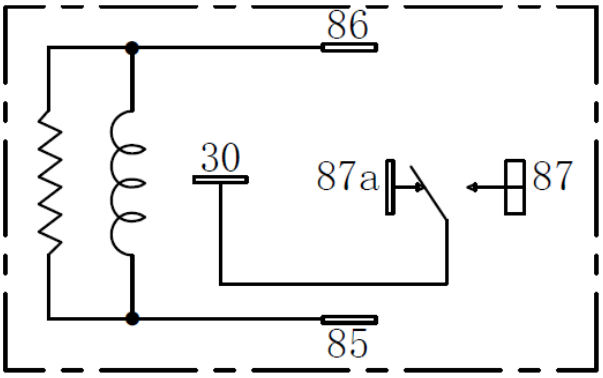

Start-stop controller

The start-stop controller requires a special instrument to detect. The simple method can determine whether it is faulty by removing the materials of the same model and replacing them with the faulty car. The start-stop controller is located in front of the body.

或 Or

Start-stop controller

6.Fuel supply system

Notice before service

1. Bending or twisting the control cable can affect smooth operation and may cause a short circuit or open circuit, causing the vehicle to lose control.

2. Work should be carried out in an open and ventilated place. Smoking, dialing mobile phones and other behaviors that may cause sparks are prohibited on the job site.

3. Before operation, the high-pressure fuel pipe should be depressurized first. The method is as follows: Pull out the fuel pump plug, start the engine and let it idle until it stalls. Turn the engine off switch to " ", then disconnect the vehicle power and lock the car.

4. Do not manually open the throttle valve body after the throttle cable is removed, which may lead to abnormal idling.

5. After removing the throttle valve body, apply masking paper or clean non-woven fabric to block the air inlet to prevent foreign objects from falling into the engine.

6. Do not damage or operate the throttle valve body, which may cause abnormal throttle operation.

7. After removing the throttle valve body, dust or foreign matter should be prevented from entering the throttle hole or air passage. If necessary, it can be cleaned with dry compressed air.

8. It is forbidden to loosen or tighten the bolts or nuts marked with a marker on the throttle valve, which may cause abnormal throttle opening and closing and idle speed control.

9. Do not use carburetor cleaner.

10. Throttle valve body components not specified in this manual shall not be disassembled.

11. If there is a " " symbol on the right side of the step, you can click to quickly jump to the corresponding step.

CAUTION

●After reinstalling the battery or EFI components, the EFI system needs to be reset. For specific operation details, please refer to the precautions in the driver's manual or the throttle body chapter of this manual.

Fuel tank removal

Caution：

●The vehicle must be parked on a flat, stable ground or lift platform.

●The engine needs to be completely cooled before operation.

●Wear waterproof gloves when draining coolant to prevent it from touching the skin.

●The demolition site must be ventilated and fire prevention should be paid attention to. See the previous chapter for specific matters, which will not be repeated here.

●Use the oil pump first or wait until the fuel in the fuel tank is about to be consumed before disassembling.

●Pay attention to protect the oil outlet of the oil pump, and only pull out the high-pressure fuel pipe axially. Be careful not to pull or press the oil outlet with radial force.

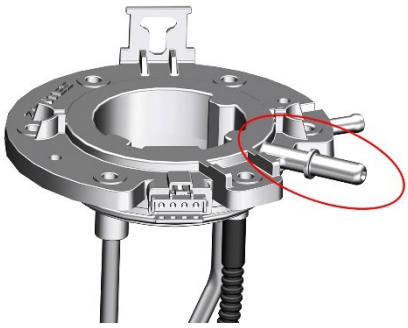

1.Disassemble the fuel tank assembly

a. Consume the fuel in the high-pressure tubing according to the steps in the instructions before service.

b. Use the 5 #inner hexagon to remove the 6 M5×45 bolts (1), pick up the fuel tank lock slightly, unplug the plug pointed by the arrow, and then remove the fuel tank lock. Note: When reassembling, you need to pretighten diagonally and then tighten the 6 bolts, otherwise the uneven compression of the sealing ring of the fuel pump will easily lead to leakage and cause safety hazards. Bolts(1) standard torque is 3～4 N.m.

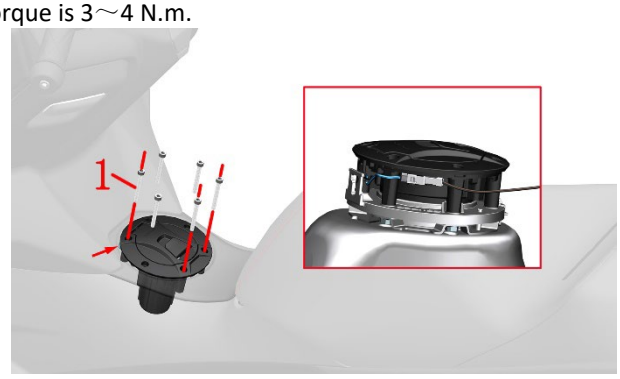

c.Refer to the "Cover Parts Disassembly and Assembly" procedure to remove some of the cover parts. Remove them until the configuration shown in the following figure is achieved. Refer to the "Maintenance" chapter to replace the fuel pipe by following the steps for removing the high-pressure fuel pipe.

d. Follow the disassembly steps for the engine, and remove the wiring connectors, oil pipe connections, and water pipe connections on the engine. Remove the plug of the rear wheel speed sensor. Refer to the "Throttle Body" steps to remove the throttle wire from the dial. Refer to the "Disassembly of Rear Disc Brake Caliper" steps to remove the rear brake hose and the wheel speed sensor. Then, park the vehicle on a flat and wide area. Turn the steering wheel to the right fully, place a stool at the position indicated by the arrow at an appropriate height, and lift the rear wheel of the vehicle off the ground by standing on it.

e. Use a 14# wrench to secure the nut (2), and use a 13# socket to loosen the bolt (3). Remove the two nuts (2), but do not remove the bolt (3) for the time being.

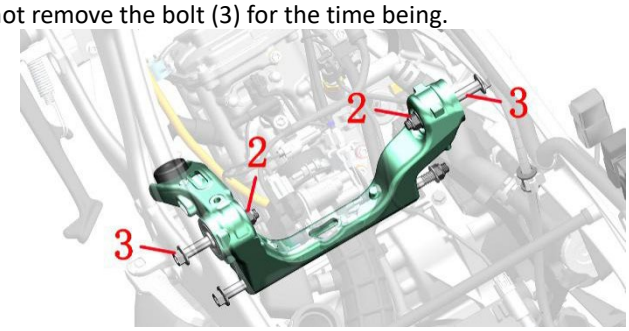

f. Use a 14# wrench to fix the nut (2), and use a 13# socket to loosen the bolt (4). Remove the two nuts (2). One person holds the rear wheel, and another person removes the two bolts (4) from the rear shock absorber. After removing the bolts, you can gently place the rear wheel on the ground. One person supports the engine, and another person removes the two bolts (3) from the frame. After removing the bolts, you can gently place the engine on the ground.

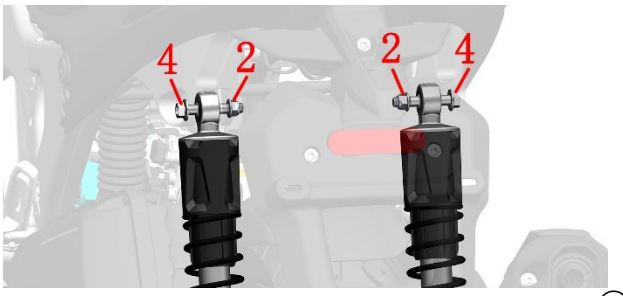

g. Use the pointed pliers to remove the plug at point ①. Remove the carbon tank fixing points at points ② and ③. Remove the fuel pump plug at point ④.

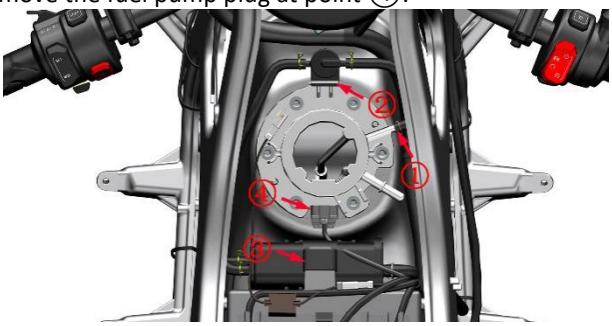

h. Use the T25 ring spanner to remove 2 M6×16 shoulder bolts. Then remove the rear cargo box bracket (6) and the battery box (7).

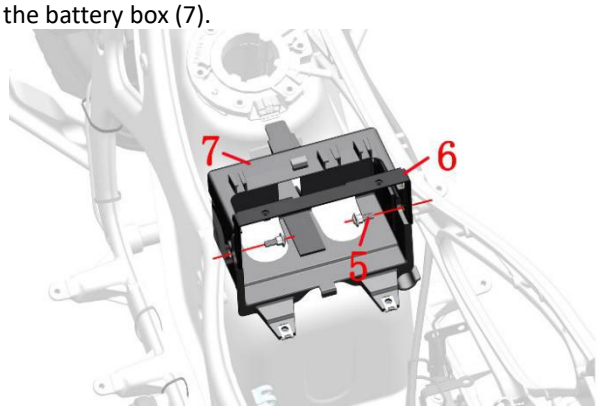

i. Remove 4 M6×12 bolts (8) using an 8# socket. After removing the bracket (9), remove the fuel tank assembly to the rear.

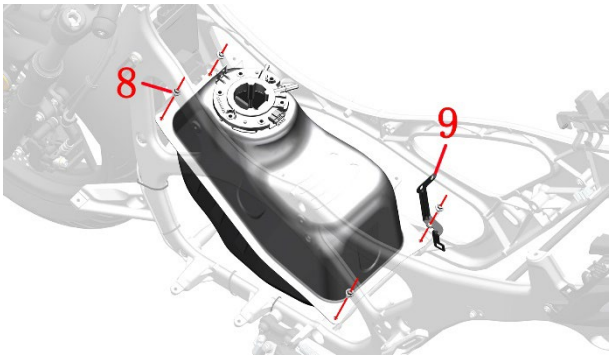

2.Remove the fuel pump

a. Place the fuel tank assembly horizontally. Use a tool to remove the two spring clips (1), then remove the fuel pump (2). Attention: When separating the fuel pump and the fuel tank (3), do not forcibly pull to avoid deforming the float linkage and causing a larger deviation in the oil quantity display. After removing the fuel tank, it should be properly stored to prevent foreign objects from entering the interior of the tank. The fuel pump is a precision component and needs to be assembled in a dust-free workshop and undergo strict testing. Therefore, it is prohibited to disassemble it by yourself. Therefore, the disassembly process of the fuel pump is not explained here.

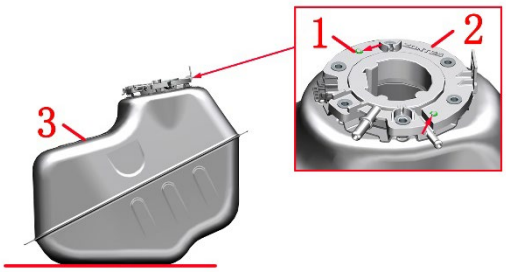

3.Disassembly of external components of the fuel tank assembly

a. The battery gasket (1) is attached to the fuel tank shell and is difficult to remove. If it needs to be removed, it can be done by heating it slightly with a hot air gun and then peeling it off, or by using a cleaning agent that removes adhesive.

Inspection

1.Fuel pressure test

The testing method can be found in the "Maintenance" chapter, specifically in the section on fuel pumps.

2.Fuel pump inspection

Unlock the vehicle and turn off the engine ignition switch to "". You should be able to hear the sound of the fuel pump running. If you don't hear the sound of the fuel pump running, first turn off the engine and disconnect the power supply.

Refer to the previous steps for removing the fuel tank and unplug the fuel pump connector.

Use a multimeter to measure the voltage at the cable end of the fuel pump plug. Unlock the vehicle, turn the engine off switch to "", and let the fuel pump charge for approximately 5 seconds. During this period, the battery voltage should be measurable.

If the engine does not start after the charging process and the battery voltage can still be measured, then check if the fuel pump relay is functioning properly. If the relay is normal, the fuel pump is abnormal and needs to be replaced.

3.Oil level sensor

Measure the resistance value using the resistance setting on the multimeter. The lowest position (empty oil): 450±5Ω, the highest position (full oil): 90±5Ω.

Pull out the float linkage and during the rotation process, there should be no sticking phenomenon and the contacts should make good contact.

Check the appearance of the float; there should be no damage.

7.Cooling system

Notice before service

1. For the relevant precautions regarding coolant (antifreeze), please refer to the "Maintenance" chapter of this manual, specifically the section on the radiator.

2. Inspect the cooling water pipes; check the coolant level and add or remove the coolant as described in detail in the "Maintenance" chapter under the section on the radiator. This section will not be repeated.

Tool：

Clamping pliers	Multimeter	Adjustable pressure air source	Self-made head cap

* It can be sealed with a soft rubber plug, or the soft tube can be folded and then tied up with a rope or wire to serve as a plug for the small pipe, used for testing the sealing performance of the water tank's filling port. You can cut a section of a pipe with an inner diameter of 16mm, and assemble it firmly at one end with a suitable air pipe connector and a clamp for testing the sealing performance between the water tank filling port and the main water tank and the small water tank.

3.If there is a " " symbol on the right side of the steps, you can click to quickly jump to the corresponding step.

WARNING

●When the engine is not fully cooled, opening the radiator cap may cause the coolant to spray out and result in burns. It is essential to wait until the radiator and the engine have cooled down before opening the radiator cap.

Troubleshooting

1.Engine temperature is too high：

a. The coolant temperature display of the instrument is abnormal or the water temperature sensor is faulty;
b. The thermostat is abnormal;
c. The coolant is insufficient;
d. The radiator, water pipes, and water tank are clogged;
e. Air enters the cooling system;
f. The cooling fan is faulty;
g. The cooling fan relay is faulty (refer to the section on electronic fuel injection relays in the "Electronic Fuel Injection System" chapter).

2. Engine temperature is too low：

a. The coolant temperature display of the instrument is abnormal or the water temperature sensor is faulty;
b. The thermostat is abnormal;
c. The relay of the cooling fan is faulty (refer to the section on electronic fuel injection relays in the "Electronic Fuel Injection System" chapter).

3.Coolant leakage

a. Pump seal failure;
b. O-ring damaged or aged and failed;
c. Radiator cap damaged;
d. Sealing gasket damaged or aged and failed;
e. Water pipe rupture;
f. Radiator damaged.

Coolant system distribution diagram

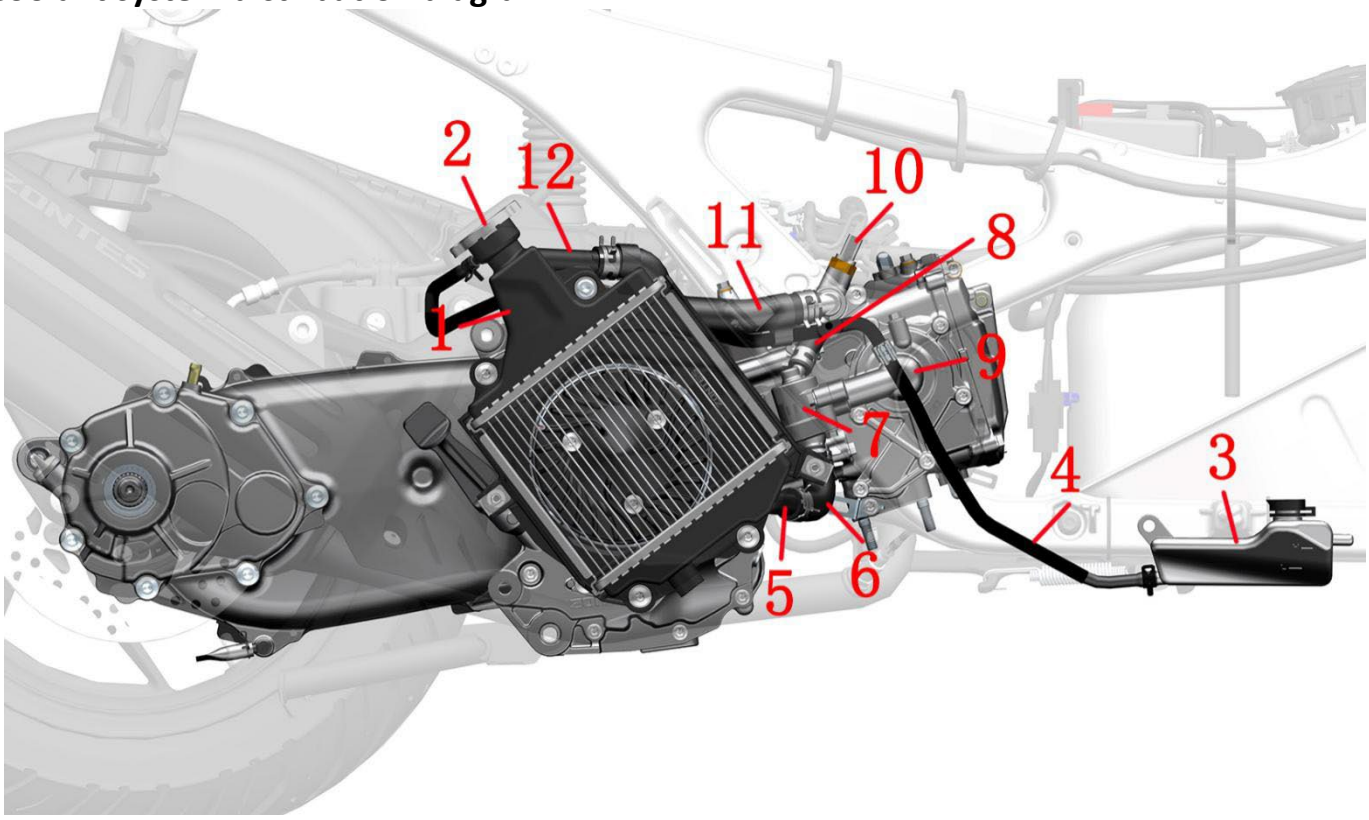

1-Main water tank 2-Water filling port of the tank 3-Auxiliary water tank 4-Connecting pipe of the auxiliary water tank 5-Outlet of the main water tank 6-Engine inlet pipe 7-Thermostat 8-Outlet pipe of the thermostat 9-Pump cover assembly 10-Water-oil common sensor 11-Engine outlet pipe 12-Inlet of the main water tank

Coolant flow diagram

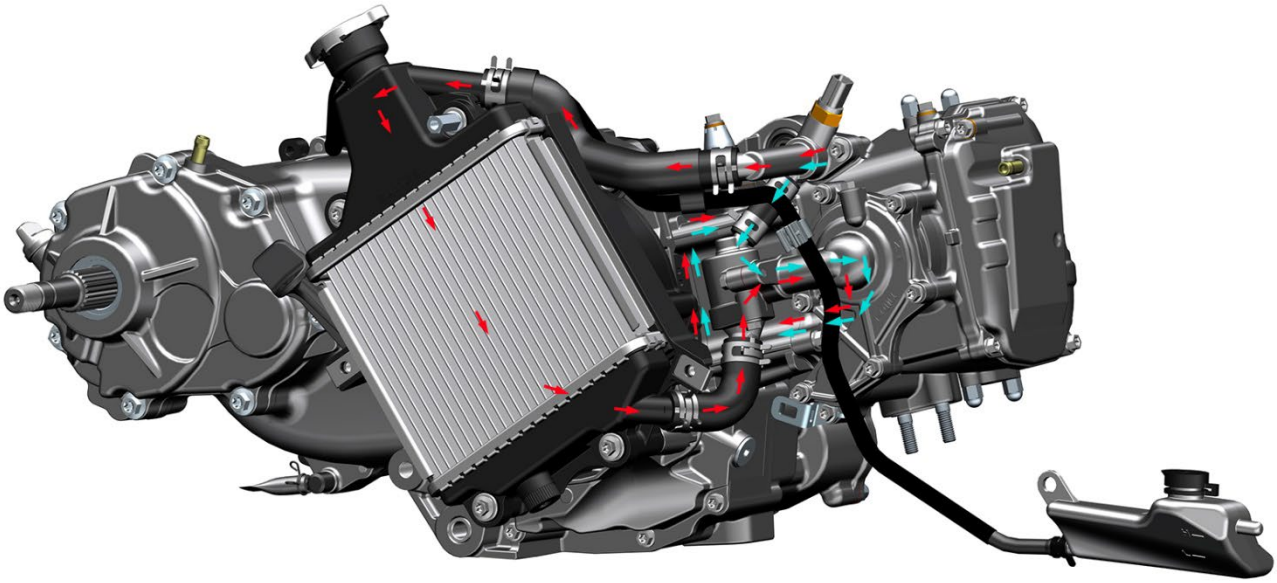

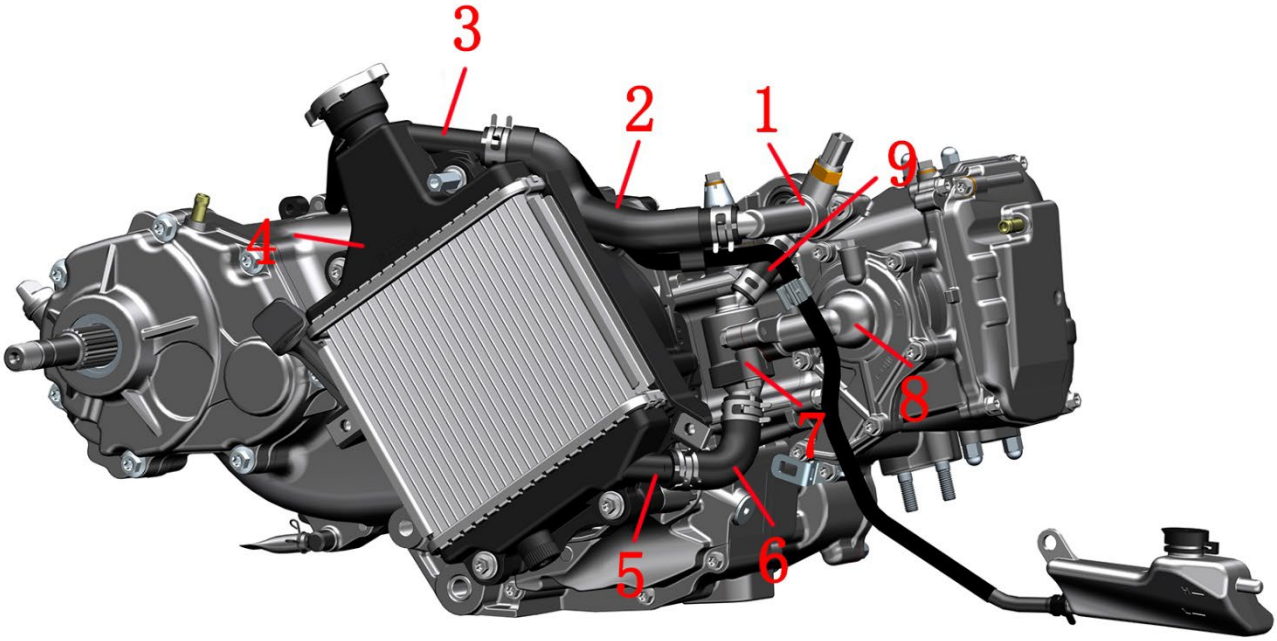

1-Cylinder head water outlet connector 2-Engine water outlet 3-Main water tank inlet 4-Main water tank 5-Main water tank outlet 6-Engine inlet pipe 7-Thermostat 8-Water pump cover assembly 9-Thermostat water outlet pipe

Cooling system：

Small loop (indicated by the blue arrow)：

Cylinder head outlet pipe connector→Thermostat outlet pipe→Thermostat→Water pump→Cylinder head→Cylinder→ Cylinder head

Large cycle (indicated by the red arrow)：

Cylinder head outlet pipe connector→Engine outlet pipe→Main water tank inlet→Main water tank→Main water tank outlet→ Engine inlet pipe→Thermostat→Water pump→Cylinder head→Cylinder→Cylinder head

Cooling system disassembly

Caution:

● Before disassembly, first refer to the cooling fluid discharge steps in the "Maintenance" chapter under the " Radiator " section to completely drain the coolant.

● During the disassembly process, wear waterproof gloves, protective glasses and other protective measures, and avoid contact of the coolant with the skin.

● Make sure to wait until the engine, cooling reservoir and muffler have completely cooled down before performing the disassembly operation.

Remove the radiator components

a. Refer to the "Remove the bottom of the surround" step to remove the bottom of the surround. Use a T25 Torx socket wrench to remove the M6×14 shoulder bolt (1), then remove the auxiliary water tank assembly. Place an oil drain pan underneath, use a hose clamp pliers to clamp the ϕ10.5 hose clamp (2), then move it about 40mm (1.6 in) in the direction of the arrow. After putting on waterproof gloves with both hands, pull out the connecting water pipe (3) of the auxiliary water tank and use the oil drain pan to catch any coolant that may remain in the water pipe and the auxiliary water tank..

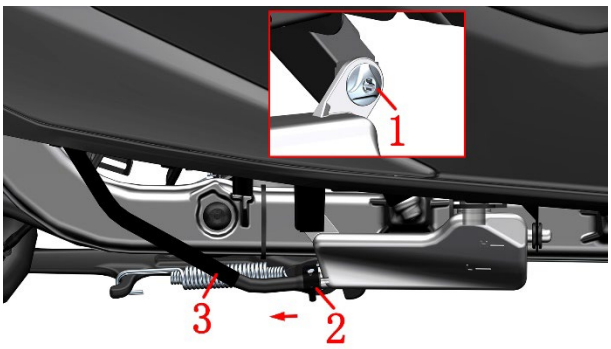

b. Refer to the "Assembly and Disassembly of Vehicle Body Panels" procedure and disassemble the vehicle body panels to the position as shown in the figure.

c. Use the T25 internal hexagonal star-shaped wrench to remove 2 M6×14 shoulder bolts (1) and 1 M6×12 bolt (4), and remove the water tank cover (5).

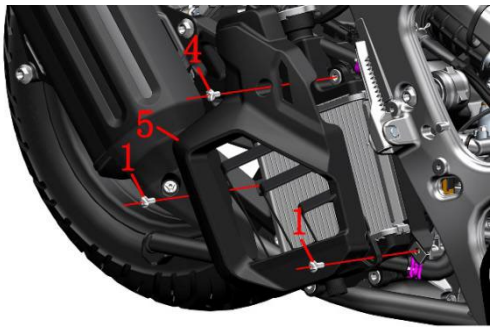

d. Connect the auxiliary water tank hose (3) and remove it from the clamp (7). Pull out the two hoses from the hose clamp (6). The hose clamp is made of plastic and care should be taken with the force applied.

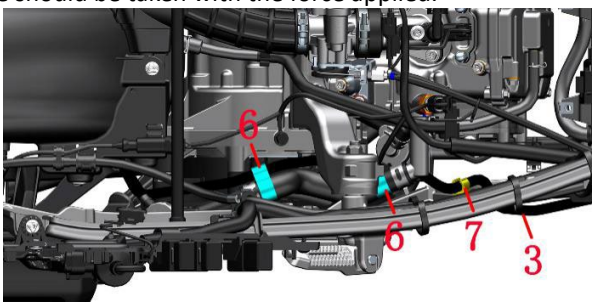

e. Connect the auxiliary water tank hose (3) and remove it from the rear inner mud plate snap.

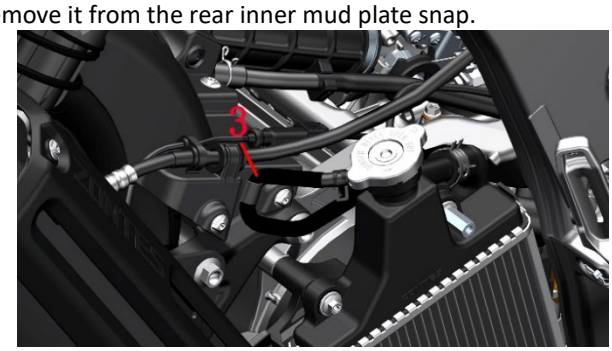

f. Remove the M6×60 bolts (9) using a 10# socket. Then, remove two M6×45 bolts (8) and one M6×45 bolt (10) separately using 8# sockets. Pull the water tank (11) slightly outward.

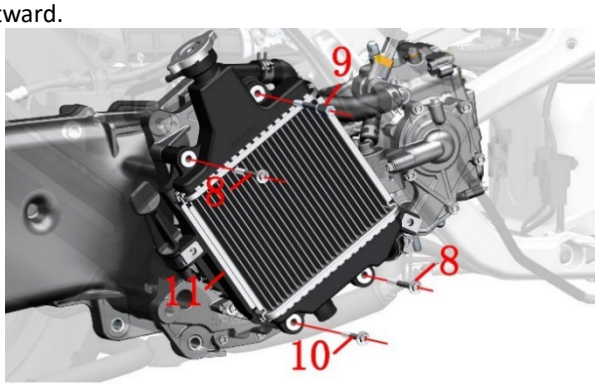

g. Place a collecting tray underneath. Use the clamp pliers to hold the clamp (12) and move it away in the direction of the arrow by approximately 40mm (1.6 inches). Release the two clamps (12) . After putting on waterproof gloves with both hands, first separate the engine outlet pipe from the main water tank, then separate the engine inlet pipe from the water tank. Collect the remaining coolant in the pipe using the collecting tray. Remove the main water tank.

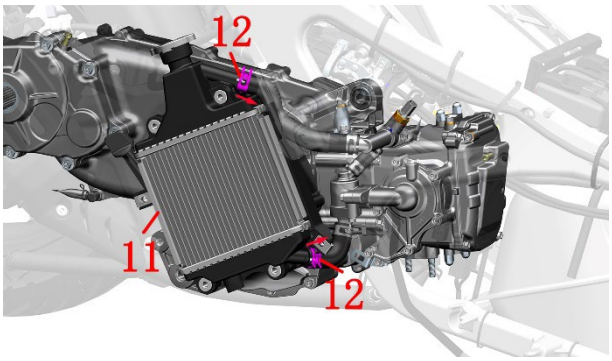

Coolant system clamp /clamp distribution diagram

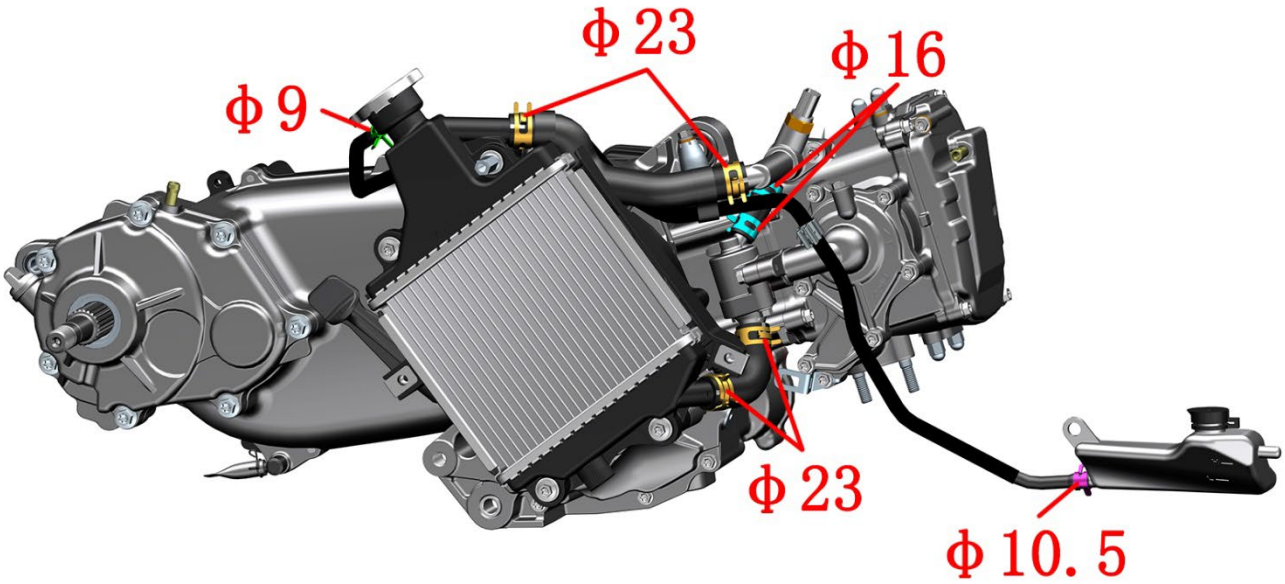

Thermostat assembly and small loop

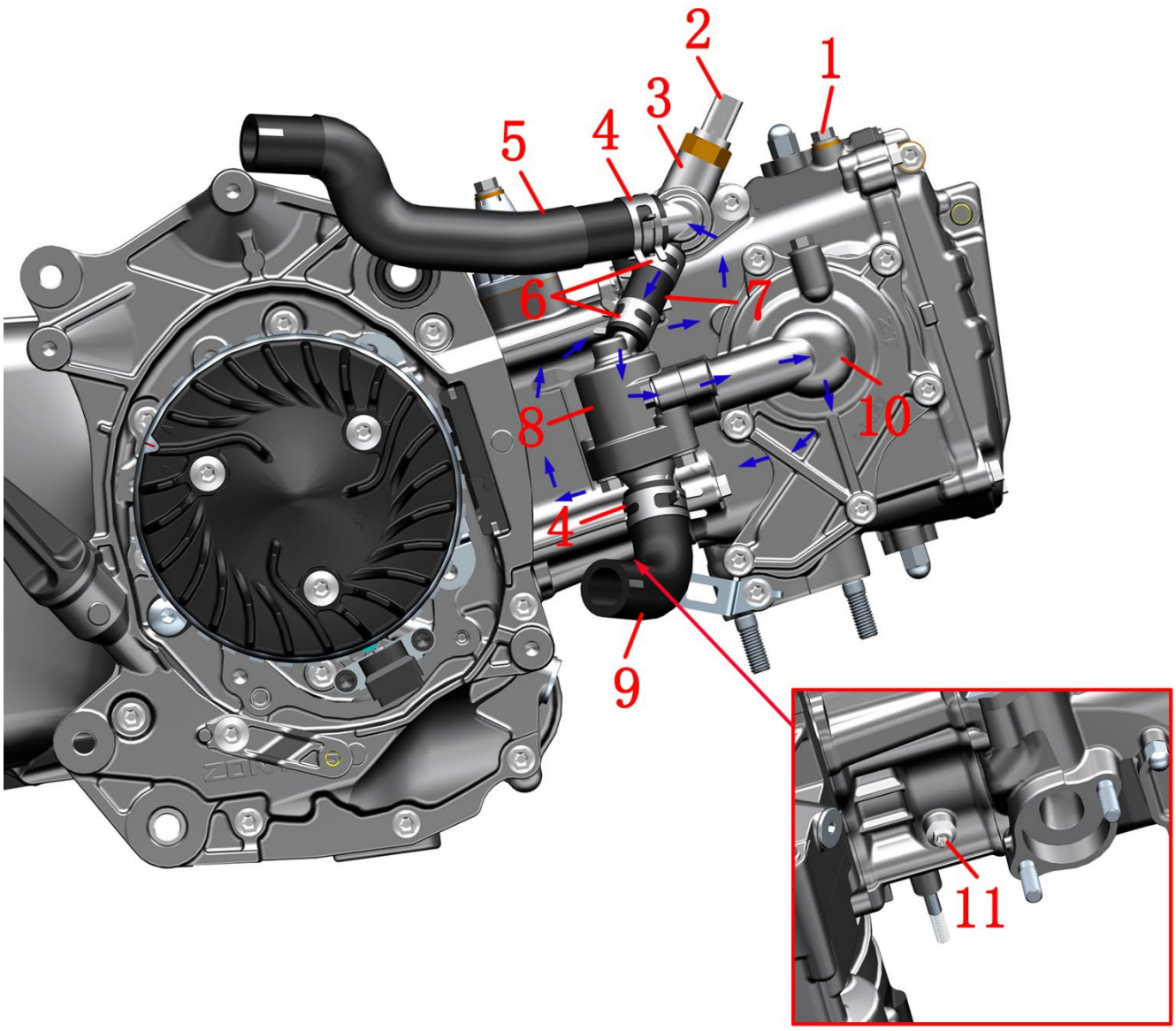

1-Hexagonal small flange internal plum blossom bolt M6×12 (9.8/zinc nickel alloy) 2-water and oil shared sensor
3-Cylinder head outlet pipe connector 4-Water pipe clamp (ϕ23) * 2 5-Water tank inlet pipe 6-Water pipe clamp (ϕ16) * 2
7-Thermostat small circulation pipe 8–Thermostat 9-Engine inlet pipe 10-Water pump component
11-Hexagonal large flange internal plum blossom bolt M6×12 (9.8/environmental color)

Caution: The bolt（1）at the cylinder head is the exhaust bolt, and the bolt (11) at the cylinder is the coolant release bolt. There is a copper gasket at the exhaust bolt, and an O-ring with a diameter of ϕ5.6 × ϕ1 is present at the coolant release bolt. Once removed, it needs to be replaced.

a. Use the clamp pliers to separately remove the clamps（4）and（6), and separate the water pipes（5), （7）and (9) . Remove the clamps from the water pipes.

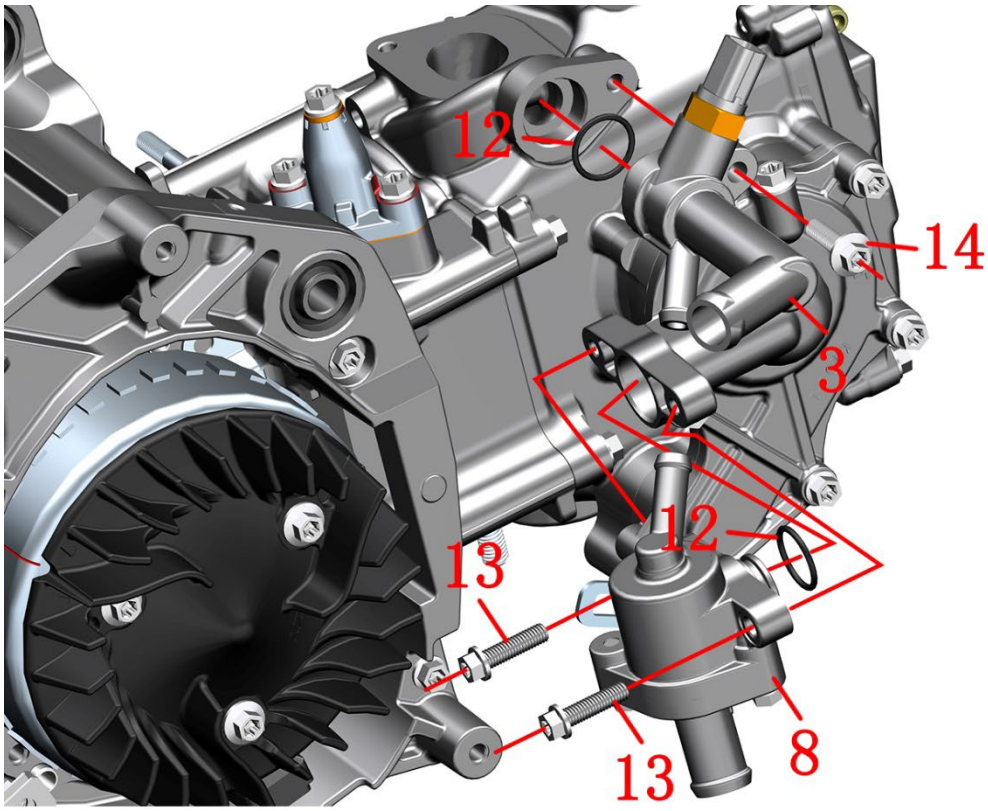

b. Use an 8# socket and a ratchet wrench to remove 2 bolts (13). Remove the thermostat assembly (8) , and take off the O-ring (12) from the thermostat assembly. Use an 8# socket to remove the bolt (14), and remove the cylinder head outlet pipe joint (3), and take off the O-ring (12) from the cylinder head outlet pipe joint. Once the O-ring (12) is removed, it needs to be replaced.

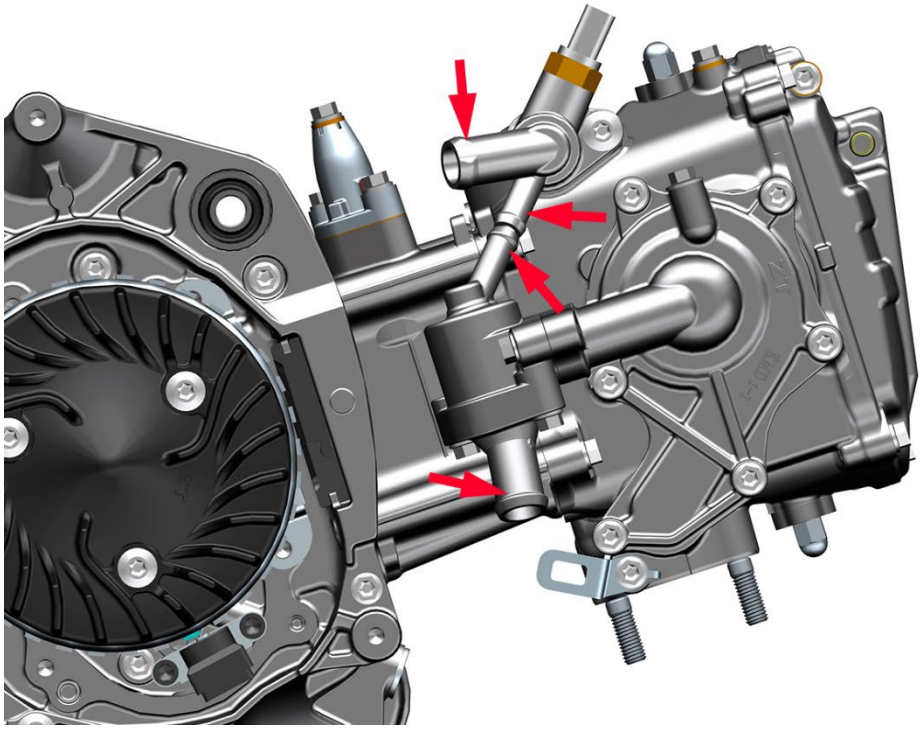

Before reassembly, the joint surfaces should be cleaned thoroughly. Pay attention that the O-ring must not be omitted and should be correctly installed and positioned. The clamp should be inserted into the boss to prevent loosening. Torque for bolt (13): 12±1.5 N.m.

Cooling system accessories

Caution：

●Special ventilation tools (gas pressure reducer valve, air gun, sealing tube) are required for the test.

●After the water inspection is completed, the water stains should be wiped clean promptly, or dried using a dust blower. When using a dust blower to dry the main water tank and small water tank, be careful that the air pressure should not be too high and avoid getting too close to the heat dissipation fins to prevent damage or deformation of the fins.

●During the airtightness test, except for specifically stated gas pressure, 160kPa (1.63 Kgf/cm2, 23.2 psi) compressed air is introduced to immerse the components in water and let them stand for 10 seconds. No bubbles should be seen. If there are bubbles, it indicates leakage and replacement is necessary.

●A small amount of the fins may be slightly bent or deformed. If the area of the bent fins is too large, it will affect the heat dissipation effect. It is recommended to replace them. Small deformations can be corrected using a small straight screwdriver.

●Do not use high-pressure water guns or high-pressure air to directly rinse or blow the heat dissipation fins of the main water tank and small water tank.

●Before conducting further tests,it is necessary to first check if there are any leakage marks on the appearance. If there is a slight leakage,it can be attempted to repair it;otherwise,replacement is required.

1.Main water tank

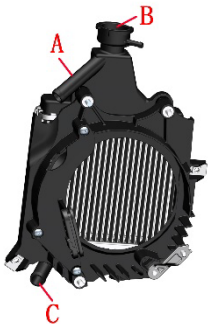

Check if the buffer glue has aged and cracked.

Use the homemade cap to block the A and C ports, and then conduct a gas inspection through the B port to check the sealing performance. Introduce a gas with a pressure of 160 kPa (1.63 Kgf/cm2, 23.2 psi) and ensure that there is no leakage at the pipe openings. Submerge the water tank in water and let it stand for 10 seconds to observe if there are any bubbles.

Low-pressure compressed air can be blown from the back to the water tank at a long distance to remove foreign objects from the surface. Or a low-pressure water gun can be used to spray and cool the heat dissipation plate from a distance to clear the foreign objects.

2.Auxiliary water tank

First, check if the rubber cap is aged or cracked. If so, it needs to be replaced. If the appearance is fine, then conduct an airtightness test.

Seal off the small water outlets, then open the black rubber cover of the water tank for an airtightness check.

Continue to seal off the small drainage outlets properly. Fill the auxiliary water tank with water and then invert it. Observe whether the rubber cover of the water tank leaks. If there is any leakage, it is considered unqualified. After completing the sealing test, drain the water and remove the plug. Let the auxiliary water tank dry naturally or use a dust blower to dry it.

3.Water and oil shared sensor

The methods for sensor detection and disassembly are detailed in the section on diagnosing and eliminating faults of electronic injection components in the "Electronic Injection System" chapter.

4.Thermostat

4.1 Inspection

Check the exterior for any damage or leakage.

Simple test method (test on the entire vehicle):

After cold starting, immediately open the water filling port cover. If the liquid level does not fluctuate, the thermostat is normal; otherwise, it is abnormal. Check that when the water temperature is below 70°C (158°F), the thermostat should be in the valve-closed state. When the temperature is higher than the initial opening temperature, the expansion cylinder expands, the valve gradually opens, and the coolant in the radiator begins to circulate.

After the temperature rises, check the inlet pipe of the small water tank. You should be able to clearly feel the sign of water flow or the temperature of the pipe wall. Otherwise, the water pump or waterway is blocked.When the temperature reaches 80℃ (176°F) and the heating speed slows down, it indicates that the thermostat is functioning properly. If the water temperature keeps rising rapidly and suddenly boils over when the internal pressure reaches a certain level, it suggests that the valve is stuck.

If there is any sticking or improper closure, it can be disassembled for cleaning or repair first. Otherwise, replacement is necessary.

4.2 Fault phenomenon

When the water temperature gauge indicates a high temperature, the engine is overheating, but the coolant temperature in the water tank is not high, and when touching the radiator with your hand, it is not hot. The small water tank fan is rotating normally. This indicates that the main circulation is blocked or restricted. A preliminary diagnosis can be made as an abnormal thermostat.

Abnormal thermostat usually has two situations:

a. The main valve remains closed for a long time. Regardless of the water temperature, the coolant circulates along the small circulation route, causing the engine to overheat.

b. The main valve remains open for a long time. The phenomenon is that the water temperature rises slowly when starting, especially in winter, and the slow rise of the coolant temperature makes the engine not work at the normal temperature, resulting in the engine temperature being too low.

4.3 Disassembly

The inspection method for the thermostat assembly:

Block off both ports, introduce 181 kPa (1.85 Kgf/cm2, 26.3 psi) of compressed air through one of the ports, and place it in water to observe if there are any bubbles. If there are, it indicates leakage.

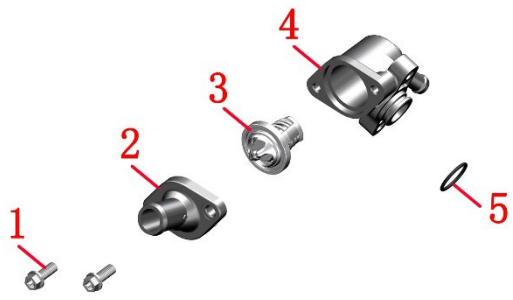

1-M6×16 bolts 2-Thermostat lower housing
3-Thermostatcore 4-Thermostat upper housing
5-EPDM rubber O-ring

Inspection of thermostat core:

In a temperature-adjustable constant-temperature heating device, check the opening temperature, full-open temperature and stroke of the main valve. If any of these does not meet the specified value, it should be replaced. Alternatively, use a thermometer, water, heater and container for testing.

The initial opening temperature of the thermostat is 80 - 84℃ (176 - 183°F), and it is considered to be fully opened when the core moves 0.1mm (0.004 in). The full opening temperature is 95℃ (203°F), and the core needs to move more than 3.5mm (0.14 in) for it to be fully opened.

A simple testing method is to place the core in a high-temperature-resistant container, pour boiling water into it and leave it for a while. Then, remove the core with pliers and observe whether the valve can fully open. If it can, it indicates that it is normal. After the temperature gradually decreases, the valve should be able to reset until it returns to the fully closed position.

Before reassembly, the mating surfaces should be cleaned thoroughly and the O-rings must not be left out.

5.Water pipes

Check whether there are any cracks, bulges or other defects on the surface of each water pipe. Block one end of the pipe, leave the other end open and insert the pipe into the water outlet. Check if any bubbles are produced. If so, the pipe needs to be replaced.

8.Braking System

Notice Before Service

1.The content of this chapter requires some experience in maintenance. It is recommended to have it inspected or repaired at a maintenance unit with relevant qualifications.

2. Frequent inhalation of the dust produced by the brake pads, regardless of its composition, may have some impact on health. Inhalation of particles should be avoided.

3. Do not use compressed air or brushes to clean the brake assembly; use a vacuum cleaner.

4. Brake fluid should be prevented from dripping onto the paint surface of the body panels or the surfaces of the components. If it accidentally splashes, it should be immediately rinsed with clean water.

5. When removing the front and rear disc brake master cylinders, ensure that the brake fluid in the reservoir remains level. Do not invert the cylinders to prevent air from entering, which could affect braking performance and, in severe cases, lead to brake failure and personal injury.

6. The steps for replacing the brake fluid and purging the air are the same. The detailed steps can be found in the "Maintenance" chapter under the section on brake fluid.

7. When brake pads or brake discs are contaminated with oil, braking force will be reduced. The contaminated brake pads should be replaced, and a high-quality degreasing cleaner can be used to remove oil from the brake discs.

8. After removing the oil cup cover of the main pump, measures should be taken to prevent dust and water from entering.

9. After servicing the braking system, if brake fluid needs to be added, only newly opened DOT 4 brake fluid must be used. Mixing with other types of brake fluid is strictly prohibited.

10. Do not disconnect the ABS hydraulic control unit connector while the vehicle is powered on. Excessive voltage may damage the hydraulic control unit. The vehicle must be completely powered off before any maintenance work is carried out.

11. The hydraulic control unit is a precision component and must not be disassembled by non-qualified personnel.

12. Steps marked with the “ ” symbol on the right side are clickable and allow quick navigation to the corresponding step.

DANGER

●If brake fluid is accidentally swallowed, immediately contact a poison control center or seek medical attention. If it comes into contact with the eyes, rinse thoroughly with clean water and seek medical attention immediately.
●Keep brake fluid out of the reach of children and pets at all times.
●The vehicle must be parked on a level and stable surface or on a lift platform.

WARNING

●Protective gloves, protective clothing, safety goggles, and a protective mask must be worn when performing brake system maintenance.
●Do not clean the master cylinder with high-pressure water under any circumstances.

Troubleshooting

Brake Handlebar Soft

a. Air has entered the brake system hydraulic line
b. Brake fluid leak
c. The brake pads or brake disc have oil contamination
d. Brake caliper or disc master cylinder piston seal wear
e. Brake pads or brake discs worn
f. The disc brake caliper has oil stains
g. The disc brake master cylinder has oil contamination
h. The disc brake caliper is not sliding smoothly
i. Brake fluid is low
j. Brake fluid circuit is not smooth
k. Brake disc warping or deformation
l. Disc brake caliper piston wear and sticking
m. Disc brake master cylinder piston wear and sticking

Brake Handlebar Hard

a. Brake fluid line blockage
b. Disc brake caliper piston wear and sticking
c. Disc brake master cylinder piston wear and sticking
d. The disc brake caliper cannot slide properly
e. Wear of the piston seal in the brake caliper or disc brake master cylinder

Disassemble disc brake master cylinder and caliper

Caution:

●The protective measures and the hazards of brake fluid have been explained earlier and will not be repeated here.
●When disassembling the caliper, the two copper washers at the brake hose of the master cylinder must be replaced to prevent leaks. The surface of the disc brake hose bolt combined with the copper washer can be reused if there are no scratches.
●Disassembling the master cylinder and calipers requires a high level of hands-on skill, and it is recommended that this be done by professional personnel or a repair facility. Used brake fluid that is replaced should be handed over to a professional unit for proper recycling and disposal.
●The consequences caused by improper disassembly or assembly due to human error are the responsibility of the operator and are not covered under the warranty.
●It should be operated in a dry, low-dust or dust-free environment.

Disassemble disc brake master cylinder

a. First, use a #12 socket to loosen the disc brake oil pipe bolt (1). Be careful to slightly retighten it after loosening to prevent leaks; otherwise, it will be more difficult to loosen this bolt later. Pull up the rubber cover of the right rearview mirror to expose the bolt. Use a #14 open-end wrench to loosen bolt 'a', and then remove the right rearview mirror in the direction of the arrow.

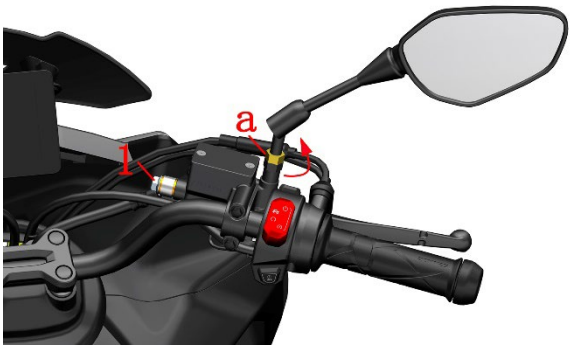

b. Hold the front brake master cylinder firmly, then use an #8 socket to remove the two bolts (2) and lift off the half cover of the disc brake master cylinder (3).

c. Tilt the front brake master cylinder so that bolt (1) is facing upward. After wearing waterproof gloves, use a #12 socket to remove bolt (1). Remove the copper washer (3) and move aside the FMC-HU oil pipe, then pour out the brake fluid from the master cylinder. Standard torque for bolt (1): 32 N·m (3.3 kgf·m, 24 lbf·ft).

d. Remove the top cover following the steps for adding brake fluid; remove it following the steps for disassembling the brake switch and brake lever.

e. Disassemble the Front Disc Brake Master Cylinder

a is the oil window component and should not be disassembled unless necessary; b is the ϕ0.5 oil hole; c is the ϕ3 pressure relief oil hole.

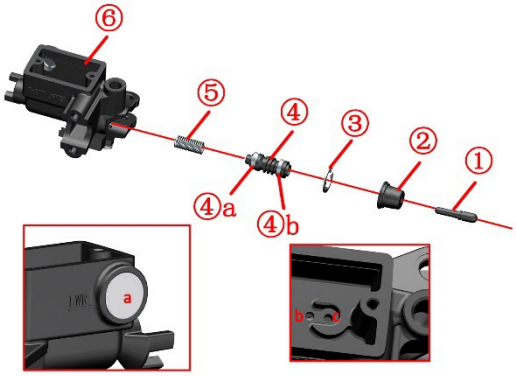

①Piston rod ② Dust cover ③ Retaining ring
④ Piston assembly (④a Outer seal ring ④b Inner seal ring)
⑤ Spring ⑥ Main pump housing

You can use diesel or kerosene to clean the brake fluid thoroughly to facilitate the next step of disassembly. If the oil holes are clogged, you can use a dust blower or a fine needle-like tool to clear them. After disassembly, use a lint-free soft brush to clean all parts thoroughly. It is not recommended to use a dust blower to dry the parts, as compressed air with poor drying or filtering capabilities may blow dust, moisture, or other debris into the already cleaned master cylinder housing. A high-vacuum vacuum cleaner can be used instead. Before assembling the piston components and springs, a small amount of DOT4 brake fluid can be applied. Do not use other lubricants such as oil, grease, or anti-rust oil.

f. Apply an appropriate amount of high-vacuum grease to the handle bolt and the outer end of the piston assembly, following the earlier instructions for lubricating the moving parts of the handle. Reassemble according to the disassembly steps, and add newly opened brake fluid and perform the bleeding operation as previously described. Note that the copper washer (3) must be replaced with a new one to prevent leakage. After assembly, ensure that the brakes have been restored before driving the vehicle.

Disassembled disc brake master cylinder

The rear disc brake master cylinder is a mirror image of the front disc brake master cylinder, and its disassembly can follow the steps for disassembling the front disc brake master cylinder.

Front disc brake caliper

a. First, use a #12 socket to loosen the oil pipe bolt (1) until it is free to move without any leakage. Then, use a #10 socket to remove the two M8×30 bolts (2), with a standard torque of 25±3. Do not operate the brake lever after removing the caliper.

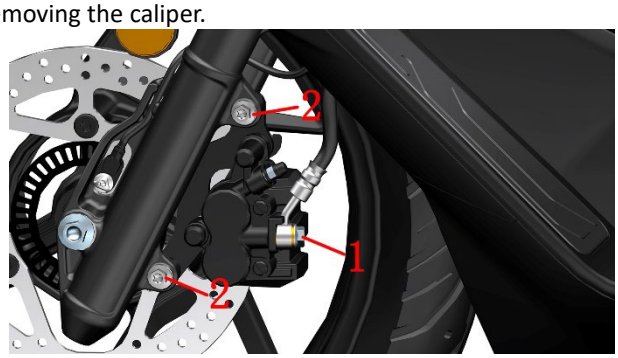

b. Place an oil catch pan under the front disc brake caliper. After putting on waterproof gloves, use a #12 socket and ratchet wrench to remove bolt（1）and take off the two copper washers(2) .

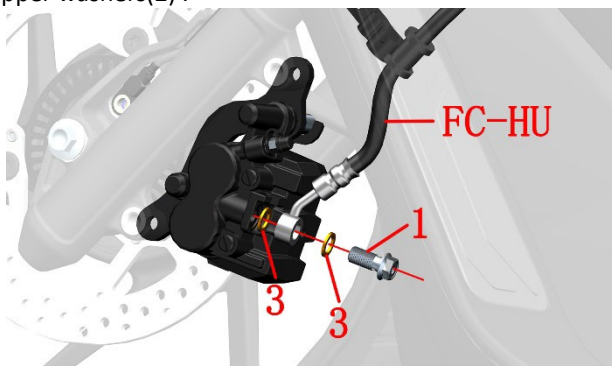

c. Remove the brake pad
d. Disassemble the front disc brake caliper.

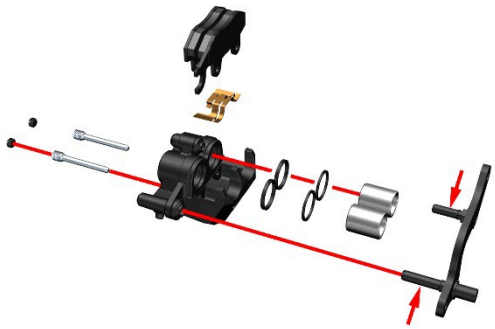

You'll need a #5 hex key and pliers.

You can use a blow gun to blow compressed air into the oil pipe bolt to push the piston out. Be sure to place a towel or other soft material at the piston to prevent the piston from hitting the caliper mounting plate and causing damage; also, keep the blow gun away from the caliper body, as being too close can cause the piston to suddenly shoot out and cause injury. Check the piston and caliper cylinder for scratches, damage, dents, and other defects. Inspect the pin shaft for deformation.

Caution：

●Apply silicone grease to the surfaces of the two pins indicated by the arrows.

●After removing the oil seal and dust seal, they should be replaced with new ones. Before assembling the oil seal and piston, apply DOT4 brake fluid, and apply silicone grease to the outer ring of the dust seal.

●Apply threadlocker to the caliper pin threads, torque: 22 N·m (2.2 kgf·m, 16 lbf·ft).

●Valve stem torque: 7–9 N·m (0.7–0.9 kgf·m, 5–7 lbf·ft).

●The open end of the piston should face the caliper mounting plate; do not install it the wrong way.

●If the piston surface has minor rust, it can be sanded off with 2000-grit fine sandpaper.

e. Reassemble all parts following the disassembly steps, and add new DOT4 brake fluid according to the steps for replacing the brake fluid before replacement. Only drive the vehicle after confirming that the brakes have been restored.

Disassembled disc brake caliper

a. Use a #10 socket to remove bolt (1) and take off the rear caliper. Standard torque for bolt (1): 25N.m(2.6 kgf.m，18 lbf.ft).

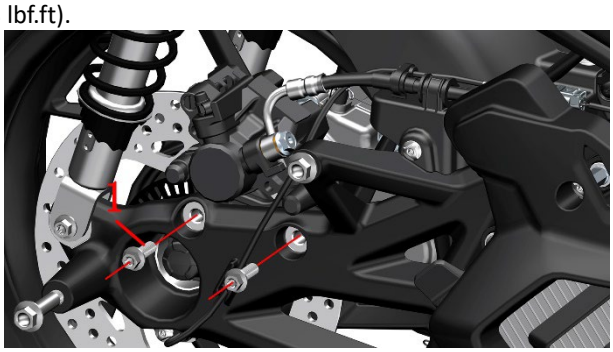

b. Place an oil drain pan under the bottom of the caliper. After wearing waterproof gloves, use a #12 socket to loosen bolt ⑵, remove the copper washer ⑶, and move the RC-HU oil hose aside. Follow the steps for adding brake fluid to the rear disc brake master cylinder to remove the master cylinder cover and speed up the brake fluid drainage. Bolt ⑵ standard torque: 32 N·m (3.3 kgf·m, 24 lbf·ft).

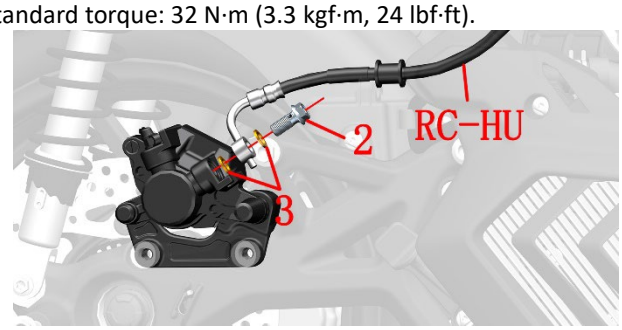

c. Remove the brake pads first.

d. Disassembled disc brake caliper

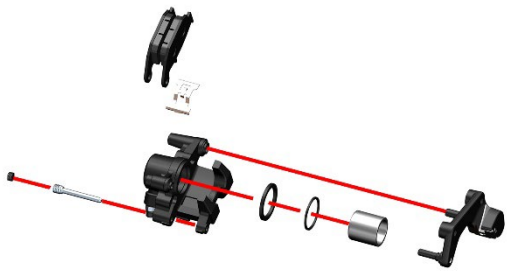

You'll need a #5 hex key and pliers.

You can refer to the steps for disassembling the front disc brake caliper piston in the previous chapter to disassemble the rear disc brake caliper piston. Check whether the piston and caliper cylinder have scratches, damage, dents, etc. Inspect whether the pin shaft is deformed. For precautions during cleaning and assembly, please see the previous description, which will not be repeated here.

Caution：

●Apply silicone grease to the surface of the pin and bushing indicated by the arrow.

●After removing the oil seal and dust seal, they should be replaced with new ones. Before assembling the oil seal and piston, apply DOT4 brake fluid, and apply silicone grease to the outer ring of the dust seal.

●Apply threadlocker to the caliper pin threads, torque: 27 N·m (2.8 kgf·m, 20 lbf·ft).

●Valve stem torque: 7–9 N·m (0.7–0.9 kgf·m, 5–7 lbf·ft).

●The open end of the piston should face the caliper mounting plate; do not install it the wrong way.

●If the piston surface has minor rust, it can be polished off with 2000-grit fine sandpaper.

Wheel speed sensor and reluctor ring gap inspection

Caution：

●The vehicle should be parked on a stable lift platform or on level, even ground.

Lower the main stand to securely park the vehicle, leaving the rear wheel suspended.

Check with a feeler gauge whether the gap between the wheel speed sensor and the ABS tone ring is within 0.4–1.2 mm (0.02–0.05 in).

If the gap is not within the specified range, it is necessary to check whether the wheel speed sensor is damaged and whether the ABS tone ring is loose. For the front wheel, check whether the position of the sensor mounted on the front disc brake caliper bracket is deformed. For the rear wheel, check whether the mounting position on the rear swingarm is deformed and whether the rear wheel nut is loose.

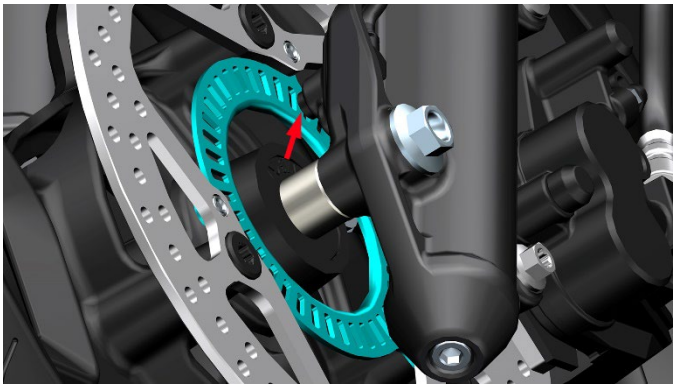

Front Wheel

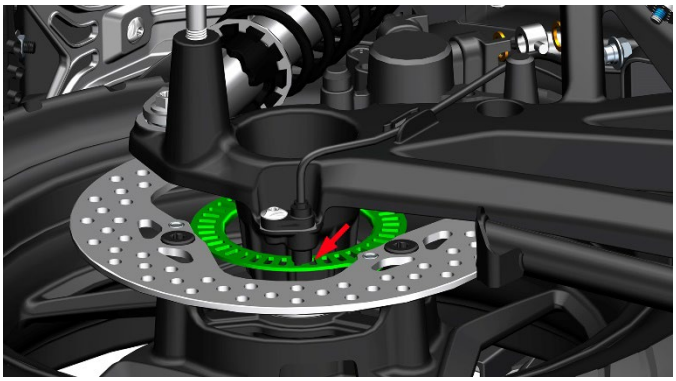

Rear Wheel

Check whether the installation position is deformed and whether the rear wheel nuts are loose.

9. Battery/Charging System

Before Service Notice

1. Used batteries should be disposed of properly to avoid causing environmental pollution. It is recommended to hand them over to professional recycling organizations for proper recycling.

2.Do not use untested or unqualified chargers to charge the battery.

3.When reinstalling the battery, experiencing sudden power loss while driving, abnormal idling, or reconnecting fuses, the electronic fuel injection system needs to be reset. The specific method is as follows:

Turn on the ignition switch and the engine kill switch, squeeze the rear brake lever to start the engine, after 10 seconds, turn off the engine kill switch, after 10 seconds turn the engine kill switch back on, and repeat this process 2 more times.

4.The vehicle's power should be disconnected before removing the battery.

5.Before troubleshooting the charging system, you should first check whether the battery is being used and maintained properly. Confirm with the owner whether high-powered electrical devices are frequently used, whether the motorcycle is left unused for long periods, or whether the lights are left on for extended periods without starting the vehicle.

6.If there is a " " symbol on the right side of a step, you can click it to quickly jump to the corresponding step.

WARNING

●When the engine cannot be started, do not press the electric start button repeatedly. Frequent operation can cause cylinder flooding, battery drain, and other issues.

●Connecting or disconnecting the plug while the vehicle is powered on may cause damage to some electrical components.。

●Overcharging, undercharging, or prolonged discharge can all lead to battery damage.

Troubleshooting

Battery Damage or Degradation Inspection Process

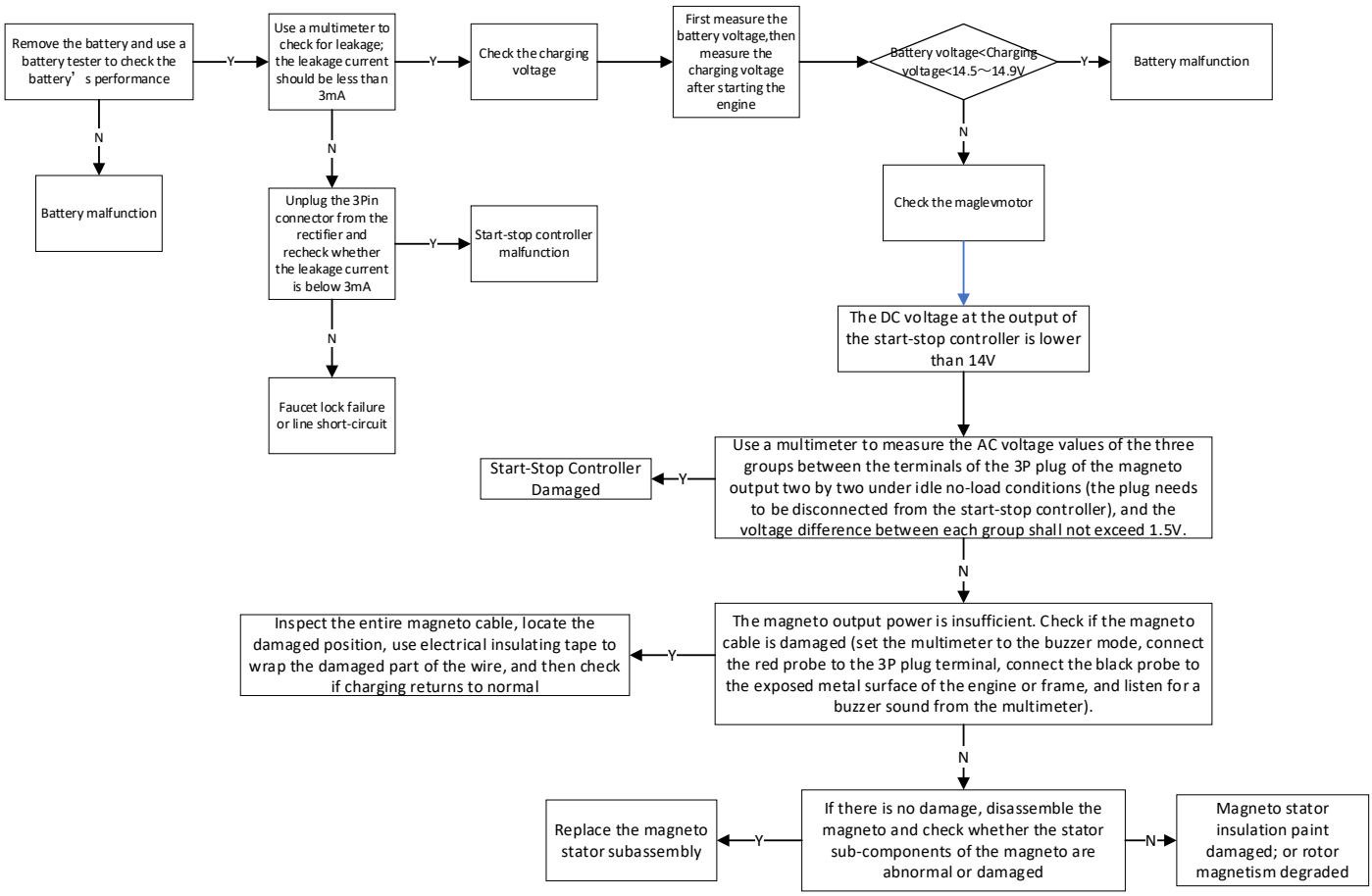

Charging System Layout Diagram

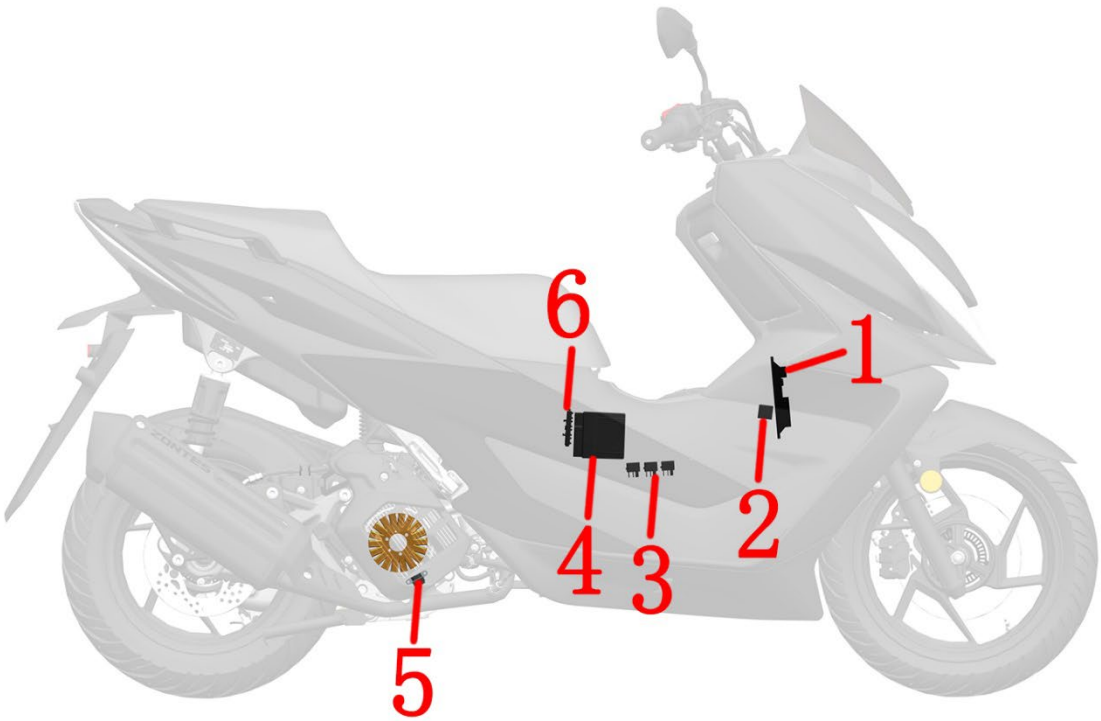

1-Start-stop controller 2- Battery 3- Main fuse (25A) 4-Magneto 5- Relay

Electrical Schematic Figure

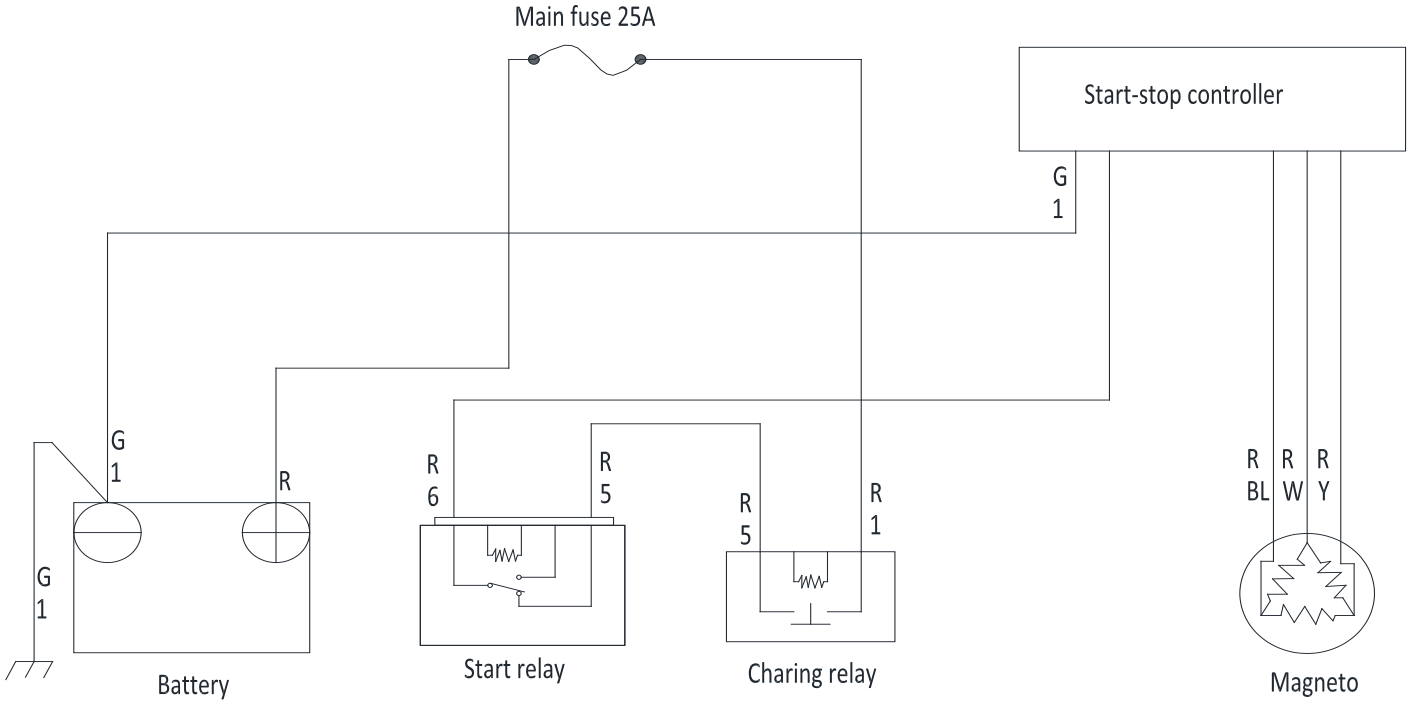

Battery removal and installation

1.Disassemble

Caution：

●The vehicle's power must be completely disconnected before removing the battery.

●You must disconnect the negative terminal first, then the positive terminal. When installing, do the opposite.

●The positive and negative terminal protective caps must be properly covered during reassembly.

●After removing the battery, you need to reset the instrument panel time and reset the EFI system.

2.Check

Open the seat cushion and use a T25 Torx wrench to remove the battery cover. After removing the protective cap, use the charger to charge the battery.

Caution：

●A battery that has just been fully charged should be left for about 30 minutes before measuring, as the voltage of a freshly charged battery can fluctuate.

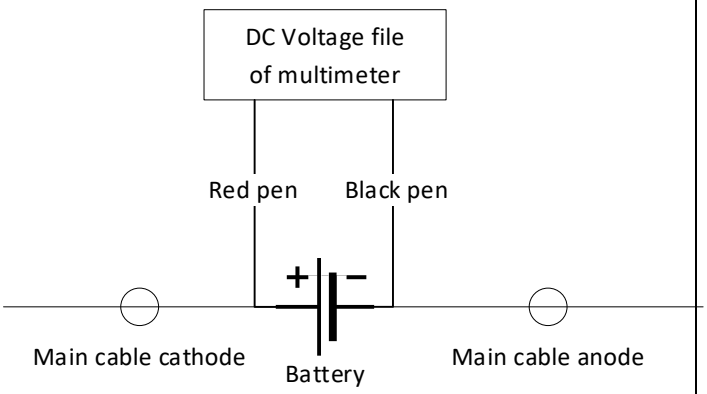

3.Charging

Open the seat cushion and use a T25 Torx wrench to remove the battery cover. After removing the protective cap, use the charger to charge the battery.

Charging system inspection

1.Leakage test

a. Turn off the vehicle and disconnect the battery by removing the negative terminal.

b. Set the multimeter to the current measurement mode. Connect the black probe to the negative terminal of the battery, and the red probe to the removed negative cable. Be sure to start with a high current range, then gradually lower it to the appropriate range.

c. Measure whether the leakage current is below 3mA. If it exceeds the standard value, check the circuit for any short circuits.

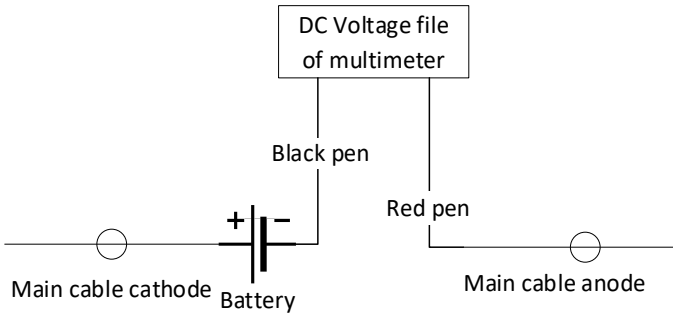

2.Check the charging voltage

Caution：

●Before testing, ensure that the battery is in good condition.

●Do not disconnect the battery or any electrical components before the vehicle is powered off.

a. First, preheat the engine to its normal operating temperature, then turn off the engine.

b. Connect the red probe of the multimeter to the positive terminal of the battery and the black probe to the negative terminal. Set the multimeter to the 20V DC voltage range. Turn on the high beam of the headlights and start the engine. Measure the charging voltage when the engine speed is at 5000 rpm.

Standard：

Battery voltage < charging voltage < 15V

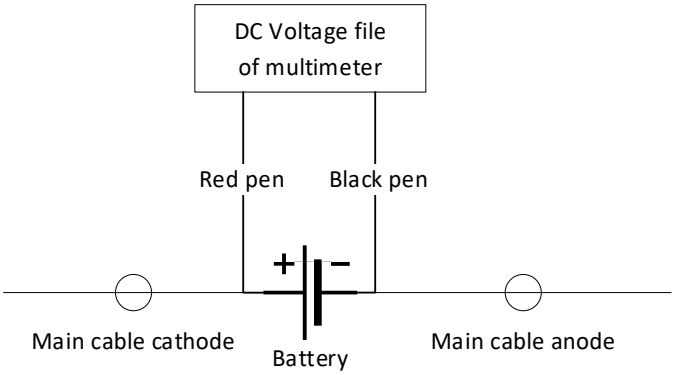

3.Inspection of the charging coil of the magnetoelectric stator

a. Use an #8 socket to remove the bolts on the splash guard, then remove the splash guard and bushing. Measure the resistance between any two terminals of the three-pin connector on the permanent magnet motor stator using a multimeter; at 25°C (77°F), it should be 0.3 ± 0.25 Ω.

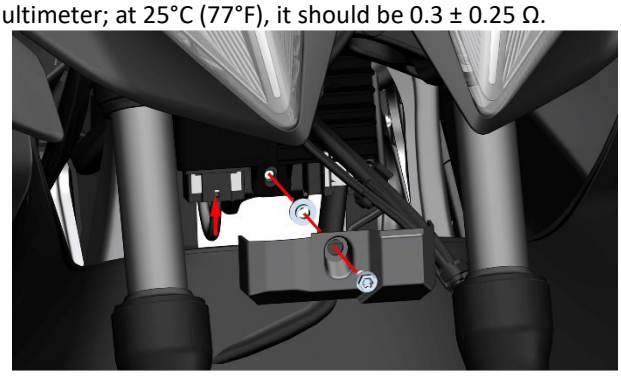

b. Check if the plug is loose or corroded.

c. After unplugging the 3-pin red connector, use a multimeter to measure the voltage between the red positive wire and the green negative wire; you should be able to read the battery voltage. Use the multimeter's continuity (beep) setting to check if the green negative wire is continuously connected to the ground (you can use any stud directly connected to the vehicle frame as the ground).

10. Front Fork Assembly

Notice Before Service

1.High-quality tools must be used, or our company's specially designed tools, fixtures, etc. Using low-quality tools may cause parts to be damaged, coatings to peel off, or improper assembly.

2.O-rings, paper gaskets, copper washers, component sealing rings, and other sealing parts must be replaced with new ones before assembly.

3.Fasteners with torque requirements need to be checked using a torque wrench; for fasteners without torque requirements, refer to the recommended general torque values for standard fasteners.

4.Clean thoroughly before assembly; after assembly, check whether the assembly is correct and properly in place.

5.Vehicles should be parked on a level surface, and safety should be observed during disassembly and assembly. This includes, but is not limited to, the use of electric tools, hand tools, pneumatic tools, hydraulic tools, and handling; preventing contact with skin, eyes, burns, and other injuries.

6.Various used oils, fluids, batteries, and other items need to be collected and handed over to qualified institutions for proper disposal; it is prohibited to dump them arbitrarily, which could pollute the environment or water sources.

7.Swallowing or inhaling coolant, brake fluid, and similar substances can pose certain health risks. After each addition, you should promptly and thoroughly wash your hands, face, and any exposed skin. If accidentally swallowed, contact a poison control center or hospital immediately; if inhaled, move to a well-ventilated area right away. If it gets into the eyes, rinse them immediately with plenty of running water and seek medical attention promptly. Keep out of reach of children and pets.

8.When changing the front wheels, a jack or a similar device is needed to support the entire vehicle.

9.Contaminated brake discs and brake pads can reduce braking performance. Please replace the brake pads with new ones and clean the contaminated brake discs.

10.Do not operate the brake handle when the current wheel is removed.

11.After the front wheel is installed, repeatedly press the brake lever until the brakes resume normal function.

12.If there is a " " symbol on the right side of a step, you can click it to quickly jump to the corresponding step.

It can only list some basic requirements to pay attention to, such as preventing accidents, and cannot cover all situations in detail. You must remain vigilant during the assembly and disassembly process to prevent accidents.

Fork assembly exploded view：

Handlebar exploded view

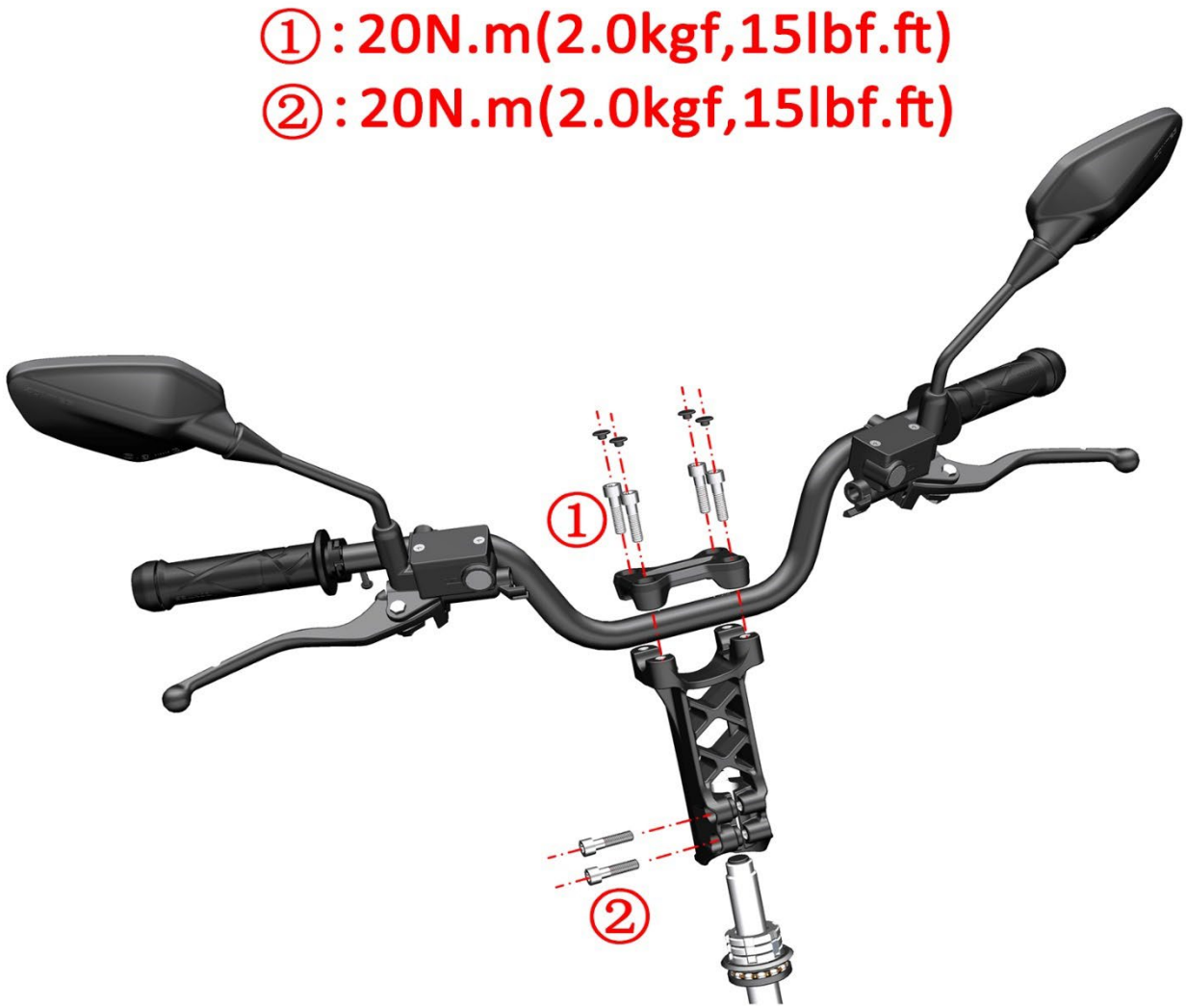

Front Fork Exploded View

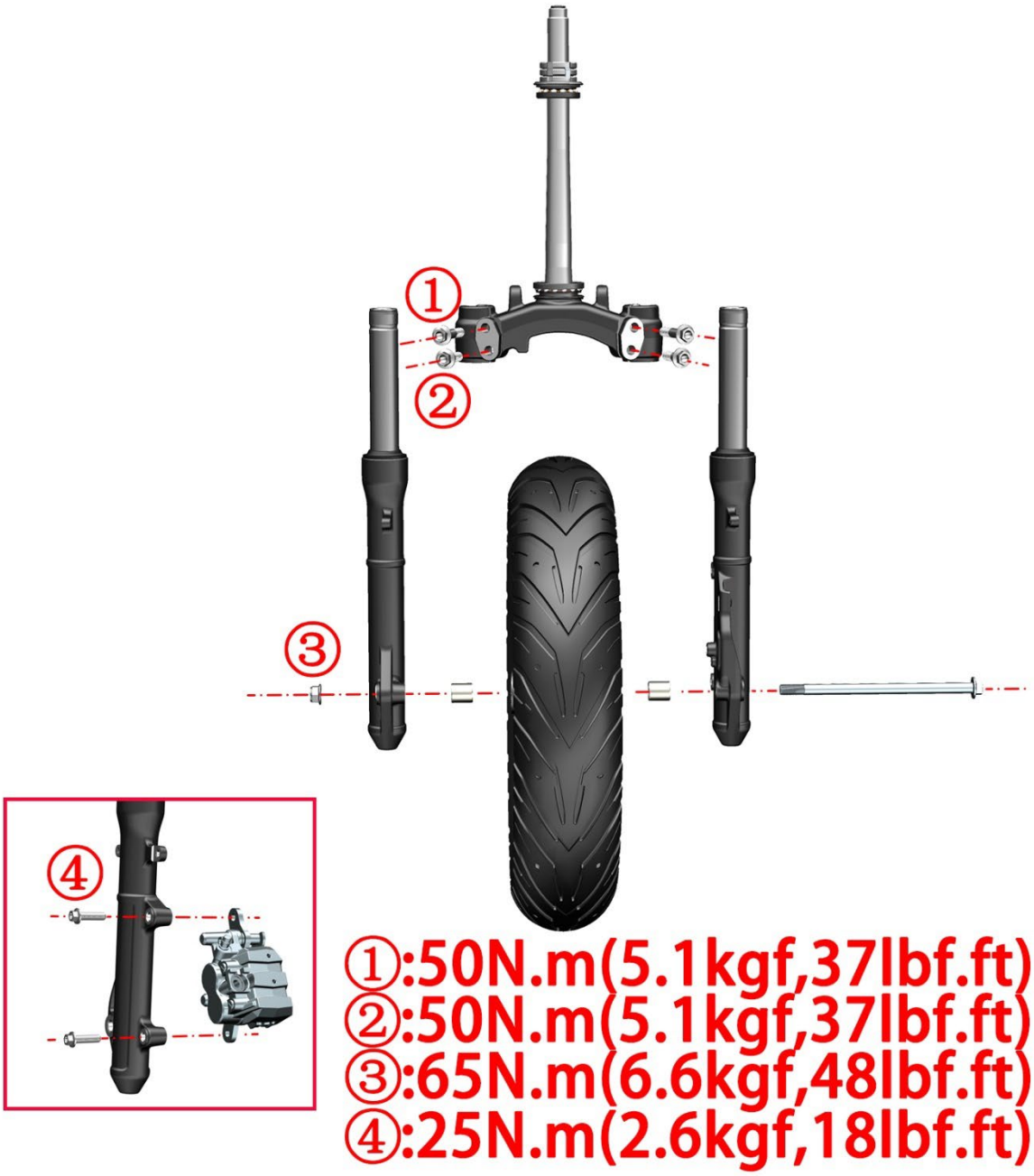

Lower Couplet Panel Exploded View

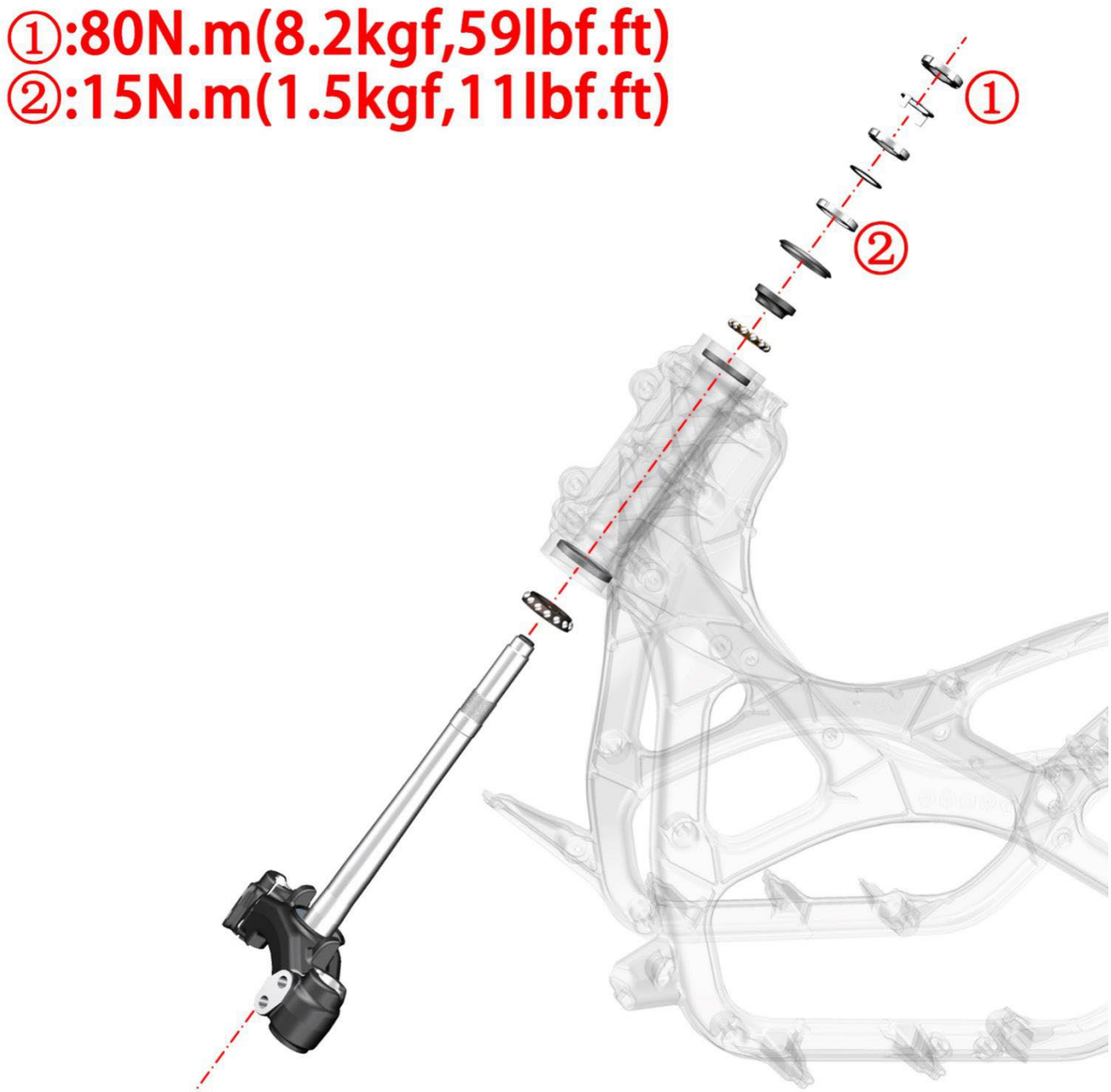

Change Handlebar

Caution:

●When removing the disc brake oil cup, make sure to keep it vertical and facing up to prevent air from entering the brake line.

●When disassembling and assembling the handle switch, be careful to adjust the internal wiring of the switch to avoid the casing or bolt posts pinching and damaging the wire insulation.

1.Disassemble the handlebar assembly

a. Use a T25 Torx Hex Key to remove one M6×12 non-standard Torx bolt (1), then use a T30 Torx Hex Key to loosen the M6 hex flange Torx bolt (2), and remove the balance weight (3) and the left handguard (4). The right handguard is removed in the same way.

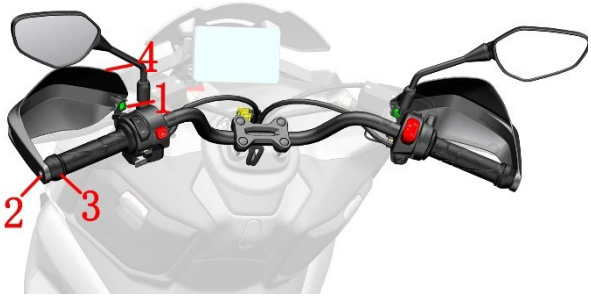

b. Use a Phillips screwdriver to remove the two M5 Phillips head ball screws ⑤, then remove the left handle rubber sleeve ⑥ and the right handle rubber sleeve ⑦; next, remove the left handle switch ⑧ and the right handle switch ⑨. Use a flathead screwdriver to remove the four decorative caps ⑩, and then use a #6 Allen wrench to remove the four M8 bolts(11) , taking off the steering handle clamp(12) and the steering handle⑬.

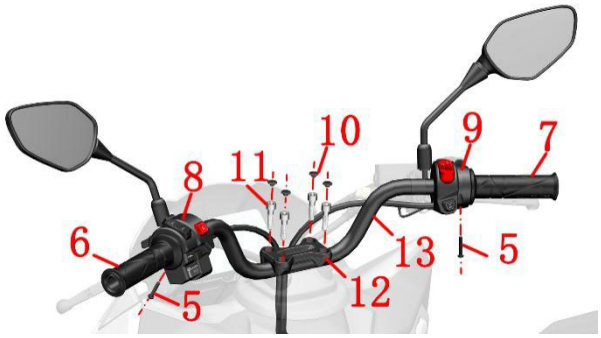

2.Install the component in the specified direction

a. Loosen the two screws on the right handlebar switch cover, open the right handlebar switch, install the throttle cable and return cable into the upper housing, tighten the screws, and pre-tighten the nuts.

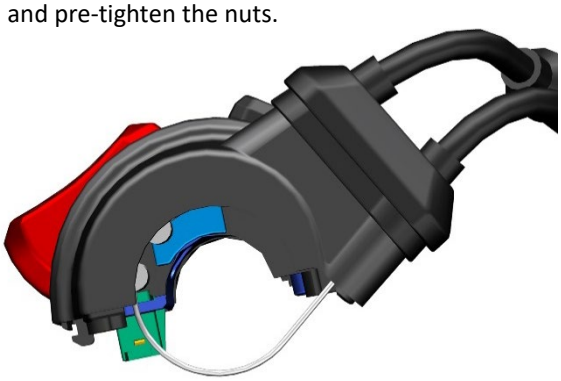

b. Clip the throttle cable into the right handlebar grip and apply grease to the head.

c. Slide the rubber sleeve with your right hand and the switch onto the handle tube, tighten the two cover screws, and use M5 cross screws to secure the switch assembly onto the handle tube.

d. Insert the left-hand switch onto the handlebar tube, tighten the three cover screws, and use M5 cross screws to secure the switch assembly to the handlebar tube. Apply adhesive to the inner wall of the left-hand grip sleeve; the length of the adhesive application should be 1/3 of the grip sleeve, and then assemble it onto the handlebar.

Replace the front wheel

Caution:

●Be careful not to damage the ABS coil during disassembly.

●After removing the front wheel, do not press the brake lever.

●The vehicle must be parked on a flat, stable surface or lift platform.

●Do not use a high-pressure water gun to wash the oil seal from a close distance.

1.Disassemble the front wheel assembly

a. Install the main support frame, then use a jack or a suitable device to support the entire vehicle, lifting the front wheels off the ground.

b. Use an 18# socket and a 14# open-end wrench to remove the M12 nut (1) and the front wheel axle (2), then take out the two bushings (3) and the front wheel assembly (4).

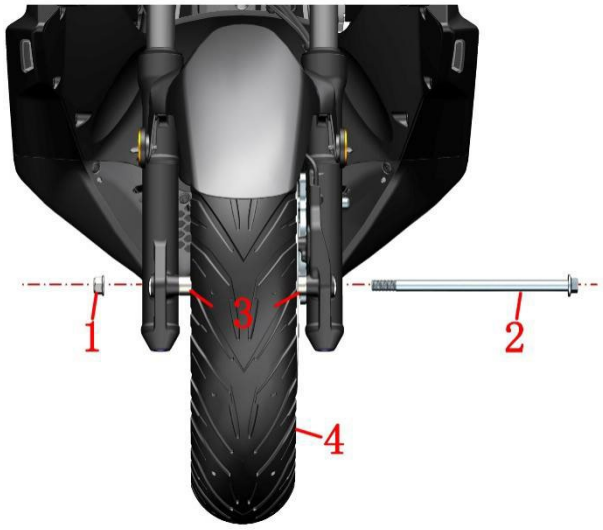

2.Install front wheel assembly

a. Use a flathead screwdriver to separate the two brake pads inside the brake caliper. If the resistance is too high and the two pads cannot be separated, you can refer to the method in "Adding Brake Fluid" to remove the cover of the disc brake fluid reservoir and then separate the two brake pads.

b. Place the front wheel into the center of the front suspension, move the front wheel left and right to fit the disc brake rotor between the brake pads, align the axle hole, insert the front axle (2), and use an 18# socket and adjustable wrench together with a ratchet wrench to tighten the M12 nut (1) and the front axle (2), torque: 65 N·m (6.6 kgf·m, 48 lbf·ft).

DANGER

●After the front wheel is installed, repeatedly press the brake lever until the brakes resume normal function.
●Contaminated brake discs and brake pads can reduce braking performance. Please replace the brake pads with new ones and clean the contaminated brake discs.

WARNING

●Every time the front wheels are replaced, a professional shop must perform a wheel balancing check.
●Tire sealant may clog the air vents of the tire pressure monitoring sensors, causing inflation difficulties or failure of the tire pressure monitoring system, so it should not be used.

Front Wheel Assembly Diagram:

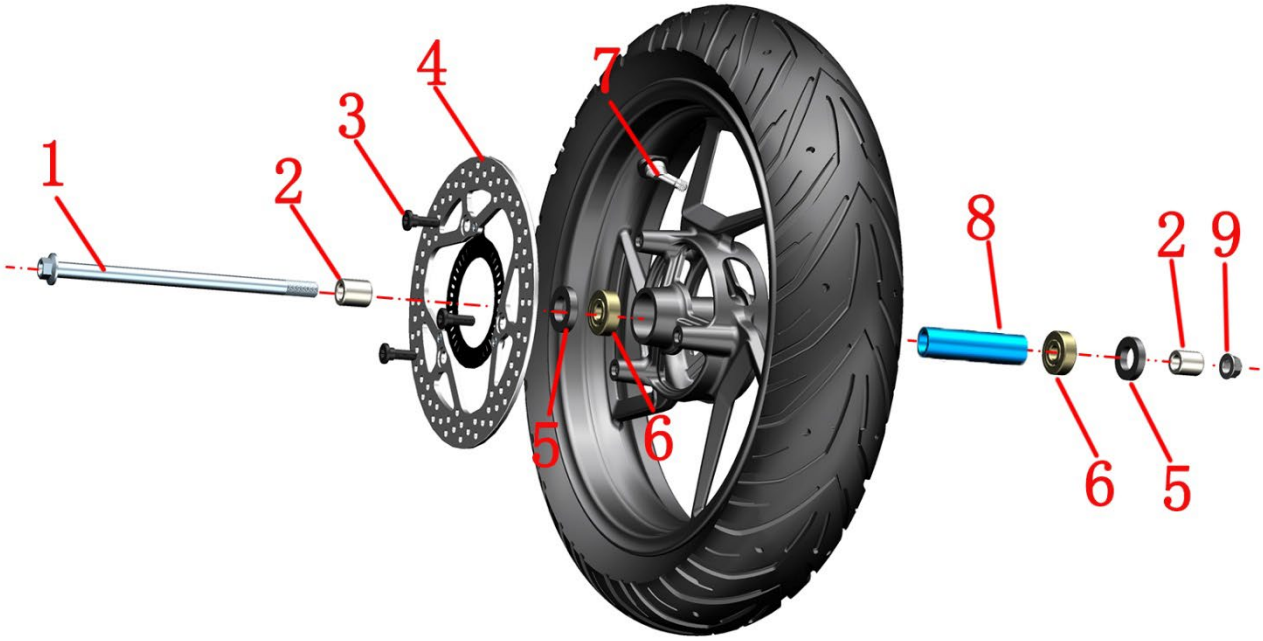

No.	Name	Quantity	Remark
1	Front axle	1	
2	Bushing	2	
3	M8×25 Shoulder Bolt	3	Thread-locking compound needs to be applied, 25–30 N·m
4	Front Brake Disc	1	
5	Wheel Seal	2	TCϕ21×ϕ37×7
6	Wheel Bearing	2	GB276 deep groove ball bearing 6301-2RS-C3
7	Tire Pressure Sensor	1	Pay attention to the orientation during installation; the elbow should face left.
8	Wheel Center Spacer	1	ϕ 12.5×ϕ19×66
9	GB6187.1 M12×1.25	1	65N.m

Front Wheel Assembly Inspection and Maintenance：

Caution：

●This inspection should be carried out by a qualified maintenance unit.

●Do not press the brake lever after removing the front wheel

●Be careful not to damage the ABS coil during disassembly.

●The vehicle must be parked on level, stable ground or a lift platform.

●Do not use a high-pressure water gun to wash the oil seal from a close distance.

1.Disc brake rotor

1.1 The service life of a disc brake rotor

In general, the replacement mileage for brake discs is around 40,000 kilometers. The replacement mileage is not absolute and should be determined based on the driver's driving habits (such as whether they tend to brake suddenly), road conditions, maintenance intervals, and other factors. However, if any of the following three situations occur, replacement is necessary.

a. Use a caliper to measure the disc brake thickness; it is less than 4.0 mm (0.158 in).

b. Lift the front wheels off the ground. When observing the front wheels from directly in front, the disc brake rotors wobble, indicating that the rotors are warped.

c. Touch the surface of the disc brake with your hand to check for obvious pits, deep scratches, or grooves.

1.2 How to Replace a Disc Brake Rotor

a. Refer to 'Replacing the Front Wheel' to remove the front wheel assembly.

b. Use a T45 Torx hex wrench to remove the five M8×25 bolts, and take off the damaged disc brake rotor.

c. After reinstalling the new disc brake rotor, use a T45 Torx hex wrench. Torque: 25 N·m (2.5 kgf·m, 18 lbf·ft).

d. Reinstall the front wheel assembly.

2.Front wheel oil seal and bearing

2.1 Service life of front wheel oil seals and bearings

Under normal circumstances, the bearings and oil seals in the front axle need to be inspected every 6,000 kilometers. However, the inspection should be based on the actual conditions of the vehicle, such as driving environment and load, among others. For example, after the vehicle has driven through water, water can enter the oil seals and bearings. The fine dust in the water can accelerate wear between the bearings and oil seals. At the same time, when water mixes with grease during friction, it forms an emulsion, losing its original lubricating function. This also shortens the service life of the oil seals and bearings. The front oil seals and bearings should be inspected in advance when the following situations occur.

a. There is an unusual noise coming from the front wheel while riding.

b. When riding, if the handlebars start to wobble from side to side.

2.2 Methods for Replacing Front Wheel Oil Seals and Bearings

a. Refer to 'Replacing the Front Wheel' to remove the front wheel assembly.

b. Use a flathead screwdriver to pry out the oil seals on both sides of the front wheel, check if the oil seals are damaged or deformed, and check whether the outer ring of the bearing fits tightly with the wheel rim. If there are no abnormalities, rotate the inner ring of the bearing by hand to check if the bearing rotates smoothly. If there is any sticking or unusual noise, the front wheel bearing and oil seal need to be replaced.

c. Replacing the front wheel oil seal and bearing should be done by a professional repair shop.

d. If the inspection shows no issues, apply an appropriate amount of grease to the front wheel bearing, then use a properly sized iron rod and rubber mallet to press the oil seal back into its original position.

e. Reinstall the front wheel assembly.

3.Front wheel rim and tire

3.1 The service life of front wheel rim and tire

Generally speaking, rims do not have a specific service life or mileage limit, but they must be replaced if any of the following situations occur.

a. The rim is deformed or warped.

b. The wheel rim has cracks or fractures

Under normal circumstances, the front tires can last around 20,000 kilometers. Normal conditions refer to regular driving situations without severe road conditions or tire punctures. Since tires are made of rubber, they will experience aging, and generally, they should be replaced after about 4 years. If not replaced, regular inspections are necessary to check for tire aging and any cracks or other issues. The tires must be replaced if any of the following situations occur.

a. The tire has been patched multiple times.

b. When the tire tread wears down to the design limit.

c. The tire shows multiple signs of aging and cracking.

3.2 How to Replace Front Wheel Rim and Tire

a. Refer to ‘Replacing the Front Wheel' to remove the front wheel assembly.

b. Take the removed front wheel assembly to a professional shop and use a tire changer to remove the tire.

c. Use a tire changer to mount the new rim or new tire. Then inflate the front tires to the standard pressure. Front tire pressure: 195 kPa (1.99 kgf/cm², 28.28 PSI)

d. Reinstall the assembled front wheel assembly onto the vehicle.

3.3 Dynamic balance

A wheel is an integrated unit composed of a tire and a rim. Due to manufacturing reasons, the weight distribution of various parts of the wheel may not be perfectly even. When the wheel rotates at high speed, this can create a state of dynamic imbalance, causing the vehicle to experience wheel vibration and steering instability while driving. To prevent this phenomenon or eliminate it once it has occurred, the wheel's balance at dynamic conditions must be corrected by adding weights to adjust the balance of its edges. This correction process is what we refer to as dynamic balancing.

The dynamic balancing of the wheels ensures that they rotate more smoothly, reducing vibrations and wobbling, improving the vehicle's stability and comfort, and contributing to safer driving.

a. After replacing the front and rear wheels each time, please have the wheel balance checked at a professionally

qualified service center.

b. The dynamic balancing weights must be attached to the designated plane on the rim (red area).

Shock absorber replacement

Caution:

●After removing the front wheel, do not press the brake lever.

●Be careful not to damage the ABS coil during disassembly.

●When removing or installing the front mudguard, be careful not to scratch the shock absorber or the front mudguard.

●When removing a shock absorber, you should first remove the two bolts that secure the same shock absorber. After removing one side of the shock absorber, then remove the other side.

1.Remove the front wheel and front fender assembly

a. Refer to 'Replacing the Front Wheel' to remove the front wheel.

b. Use a T25 Torx hex wrench to remove one M6×14 screw (1) and one M6×20 bolt (2), then take out the hose clamp. Use a T25 Torx hex wrench to remove one M6×13 bolt (4) and take off the wheel speed sensor. Use a #13 socket to remove two M10×30 bolts (3) and take off the front brake caliper from the lower part of the front shock absorber.

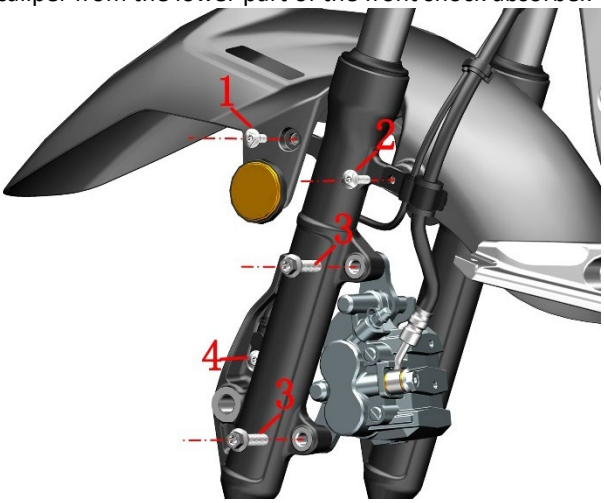

c. Remove the reflectors (5) on both sides, and use a T25 Torx hex wrench to remove one M6×14 shoulder bolt (6) and one M6×16 bolt. Gently move the front fender (8) in the direction of the arrow.

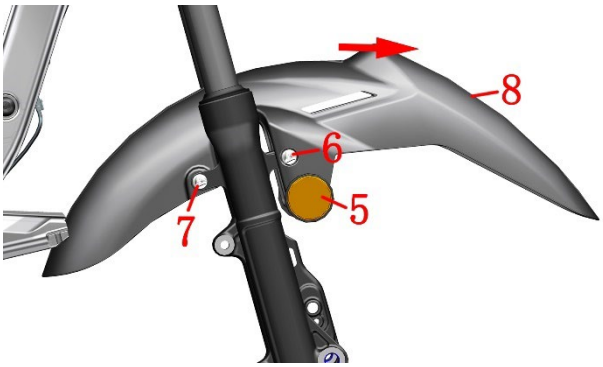

2.Remove the left and right front shock absorber

a. Use a #16 socket to remove two M10×50 bolts (9) and two M10×35 bolts. Pry open the gap on the lower connecting plate with a flat-head screwdriver and remove the left front shock absorber and the right front shock absorber.

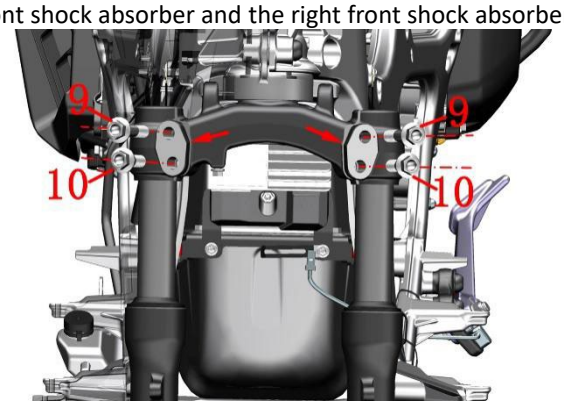

3.Reassemble components such as the shock absorber, front fender, and front wheel

a. Use a flathead screwdriver to pry open a gap on the lower connector panel and insert the corresponding shock absorber.

b. Install the corresponding shock absorber, making sure the top surface of the shock absorber is flush with the inner end of the lower connecting plate hole. After positioning the shock absorber, take a flathead screwdriver. Screw in the M10×35 and M10×50 bolts, and tighten using a #16 socket. Torque:

50N.m(51kgf.m,37lbf.ft).

c. After installing the bushing on the front wheel, align the installation holes between the two shock absorbers, insert the front wheel axle, and use an 18# socket and an adjustable wrench along with a ratchet wrench to tighten the M12 nut and the front wheel axle. Torque: 65 N·m (6.6 kgf·m, 48 lbf·ft). If one of the shock absorbers is not properly installed, the front wheel axle cannot be tightened or cannot pass through the right shock absorber. In that case, the improperly installed shock absorber must be removed and reinstalled correctly.

d. First, use a flathead screwdriver to separate the two brake pads inside the brake caliper. If the resistance is too high and the two brake pads cannot be separated, refer to the method in 'Adding Brake Fluid' and remove the cover of the disc brake fluid reservoir before separating the two brake pads. Align the gap between the two brake pads in the disc brake caliper with the brake disc on the front wheel, then insert them. Next, use a 13mm socket to tighten the two M10×30 bolts with a torque of 25 N·m (2.6 kgf·m, 18 lbf·ft).

g. Press and hold the position where the front fender was before removal, pass it through the appropriate position in the middle of the shock absorber, and install it in the corresponding position. Use a T25 Torx hex wrench to tighten the four bolts: two M6×14 bolts, one M6×16 bolt, and one M6×20 bolt. On the left front shock absorber, install the front oil pipe clamp before tightening the M6×20 bolt. Reinstall the front wheel speed sensor and tighten it with an M6×12 bolt.

Replace the lower coupling plate

Caution:

●After removing the front wheel, do not press the brake lever.

●When removing the disc brake oil cup, make sure to keep it vertical and facing up to prevent air from entering the brake line.

●After disassembly, make sure all parts are correctly reassembled.

●When installing the bearing, a proper amount of grease should be applied.

1.Disassemble parts in advance

a. Refer to 'Replacing the Front Wheel,' 'Replacing the Front Shock Absorber,' and 'Replacing the Handlebar' to remove the front wheel, front shock absorber, and handlebar.

2.Disassemble the handlebar spacers and lower coupling plate

a. Use a #6 Allen wrench to remove the two M8×30(1) bolts, then slowly unscrew the direction handle spacer(2) from the lower coupling plate. If it is clamped too tightly, you can use a flathead screwdriver to pry it loose at the arrow and then remove it.

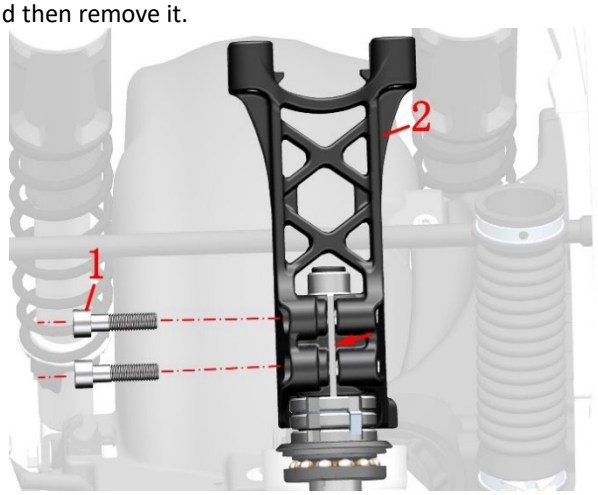

b. Use a ratchet wrench and a tool for the adjusting nut to unscrew the first steering column adjusting nut (3), and use a pick to remove the lock washer (4) of the adjusting nut. Then, sequentially remove the steering column adjusting nut (5), the adjusting nut washer (6), the steering column adjusting nut (5), and the upper dust cover (7), after which the lower link plate can be pulled out.

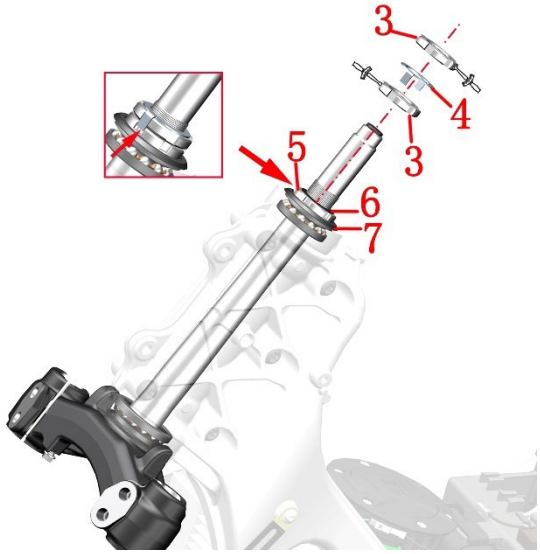

3.Install the lower coupling plate assembly

a. After applying an appropriate amount of lubricant to the new lower coupling plate component, install it from underneath the frame.

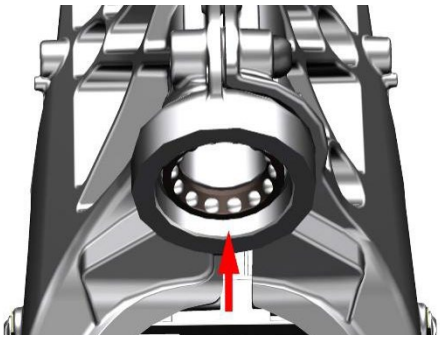

b. Sequentially insert the steering column dust cover (1) and the steering column adjustment nut (2). Then use the adjustment nut tool to tighten. Torque: 15 N·m (1.5 kgf·m, 11 lbf·ft).

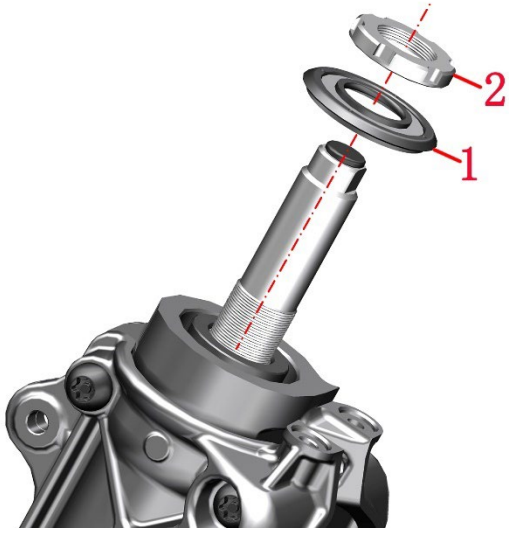

c. Ensure that the lower coupling plate rotates smoothly without sticking or loosening, then sequentially insert the adjusting nut washer (3) and the steering column adjusting nut (4). This nut only needs to be tightened and aligned with the first nut. Next, install the lock washer for the adjusting nut, and finally tighten the steering column adjusting nut (4) using the adjusting nut tool; Torque: 80 N·m (8.2 kgf·m, 59 lbf·ft).

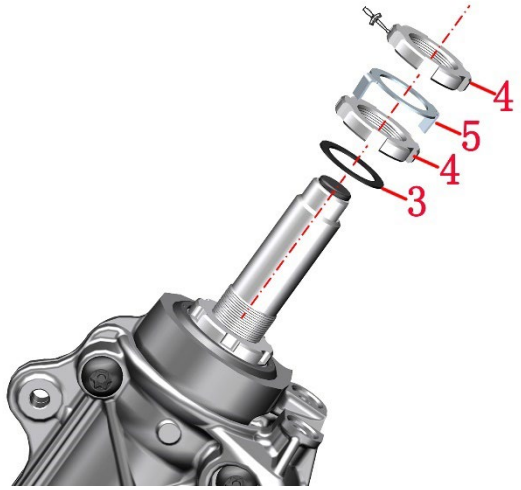

4.Install other removable components

a. Reinstall the front shock absorber according to 'Replacing the Front Shock Absorber'.

b. Reinstall the front wheel assembly following the instructions in 'Replacing the Front Wheel'.

c. Refit the handlebar assembly according to 'Replacing the Handlebar'.

DANGER

●The vehicle must be parked on a flat and stable surface or lift platform.

●After each removal and installation of the front wheel, the brake lever must be repeatedly pressed until the vehicle's braking function is restored.

11. Assembly and Disassembly of Vehicle Body Panels

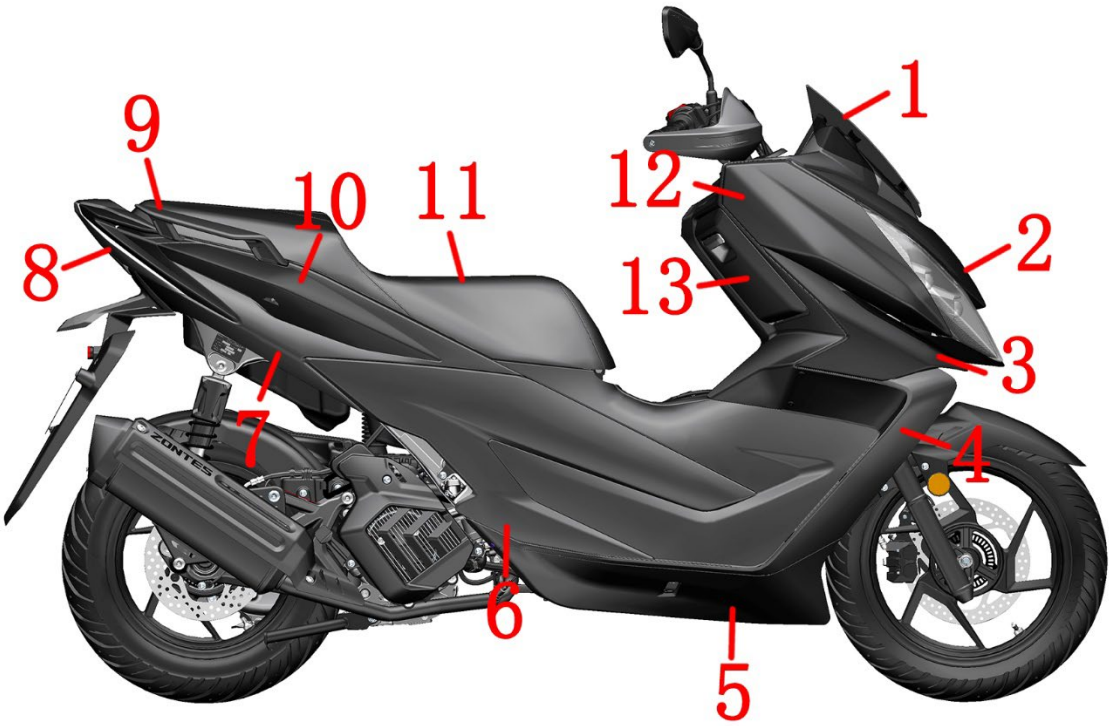

1 - Windshield 2 - Front Panel 3 - Right Head Cowl 4 - Right Footrest 5 - Enclosure Bottom 6 - Right Side Cover 7 - Right Tail Skirt 8 - Tail Light 9 - Right Armrest 10 - Right Tail Skirt Trim Cover 11 - Seat Cushion 12 - Right Panel 13 - Outer Cover of Front Right Storage Box 14 - Left Tail Skirt Trim Cover 15 - Left Armrest 16 - Left Tail Skirt 17 - Left Side Cover 18 - Left Footrest 19 - Left Panel 20 - Outer Cover of Front Left Storage Box

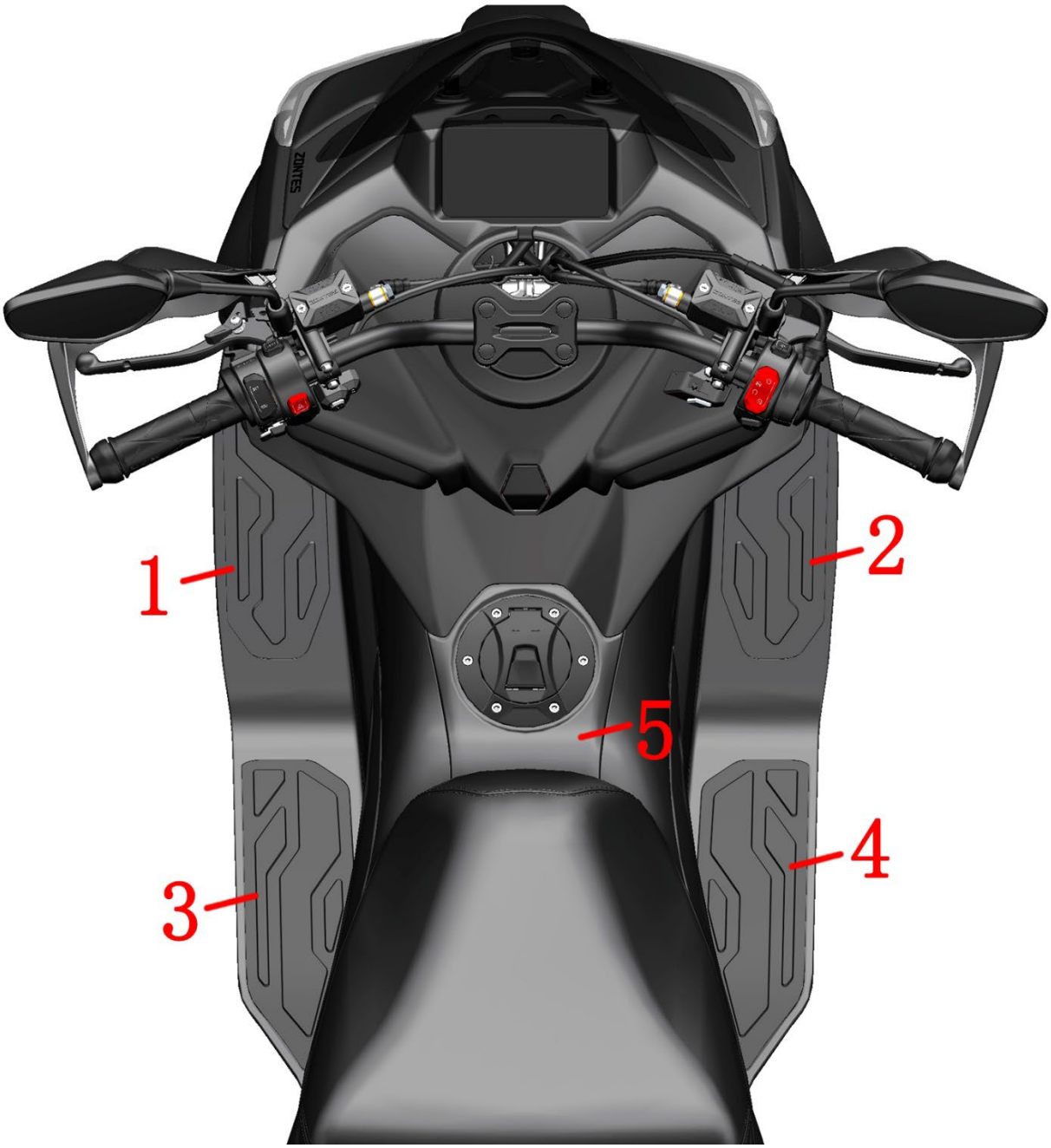

1- Left pedal upper mat 2- Right pedal upper mat 3- Left pedal lower mat 4- Right pedal lower mat 5- Fuel tank movable cover

Caution:

●When disassembling, please pay attention to controlling the strength to prevent breaking the clips.

●When removing the cover, please follow the sequence strictly and do not forcefully remove the cover, to prevent irreparable damage to the corresponding components.

●When connecting or disconnecting plugs, please control the amount of force used and the method of removal. Do not forcibly pull out the plug, to prevent damage to the plug, which could lead to poor contact of the wiring harness connectors and affect the functioning of various components.

●When installing the wiring harness plug, please check whether the pins in the male connector of the harness are deformed or misaligned to prevent damage to the pins during installation, which could affect the functionality of the components.

125V removal of the windshield

a. Remove the air guide plate in the direction of the arrow.

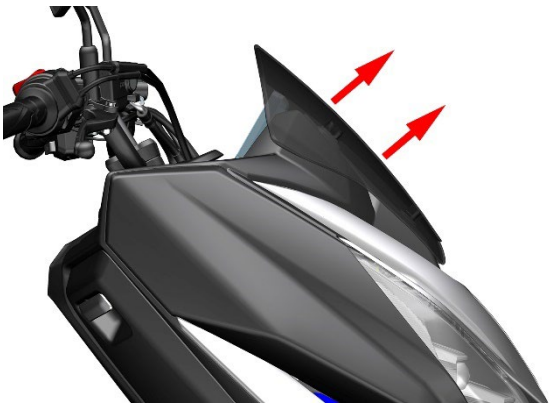

150/175V removal of the windshield

Here we only briefly explain the steps. For details, please refer to the "ZT150T-V Windshield Installation Video Tutorial" in the assembly video.

Use a T25 tool to remove the 3 M6×16 shoulder bolts and take out the 3 nylon spacers, then remove the windshield.

After removing the left panel, reach into the gap by hand to locate the rear bracket, hold it in place, then use a T25 tool to remove the three M6×20 bolts and take off the windshield front bracket. There are 3 pieces of single-sided 3M adhesive rubber pads (ϕ10×ϕ20×2) on the threaded holes of the windshield front bracket, which can be peeled off if necessary.

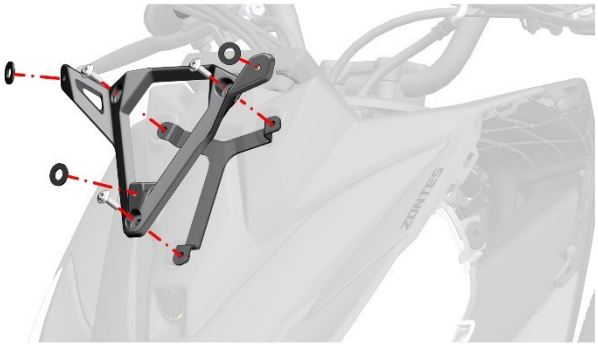

Removal of the front left and right panels

Use a crowbar to pry open along the edge from the gap indicated by the arrow.

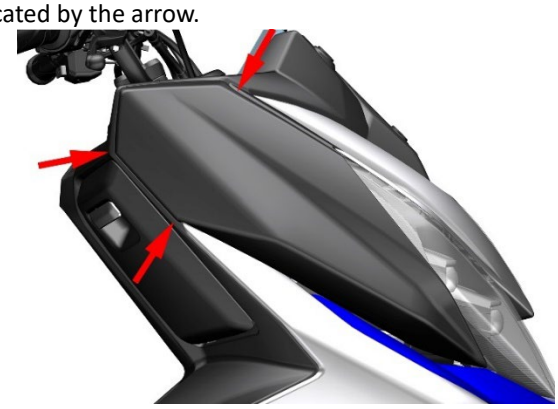

Front right

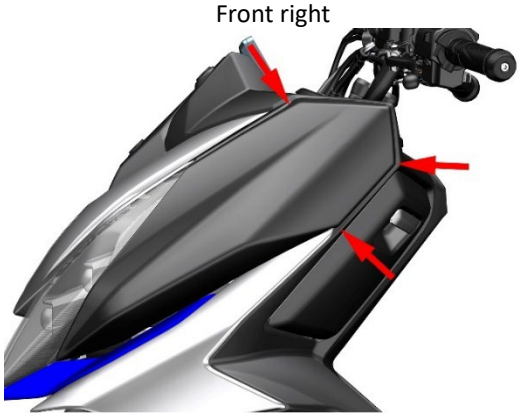

Front left

Removal of the front top panel

a. As shown in the figure, use a crowbar to pry open along the edge from the gap indicated by the arrow.

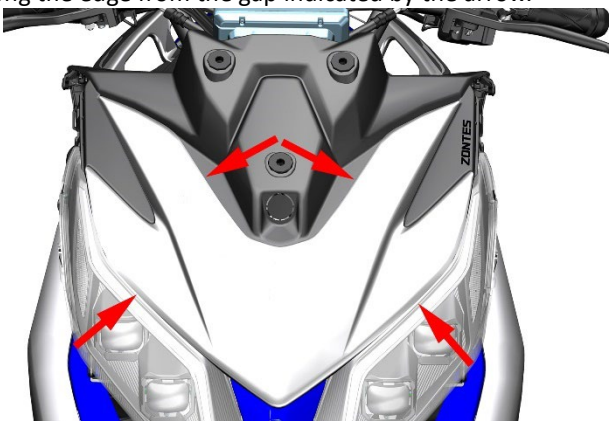

Disassembly of Instrument and Instrument Panel

a. Use a 4# hex key or crochet hook to remove a total of 6 expansion nails (1) on the left and right sides.

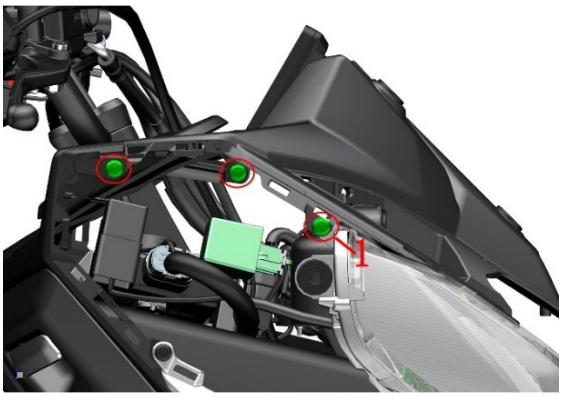

Right

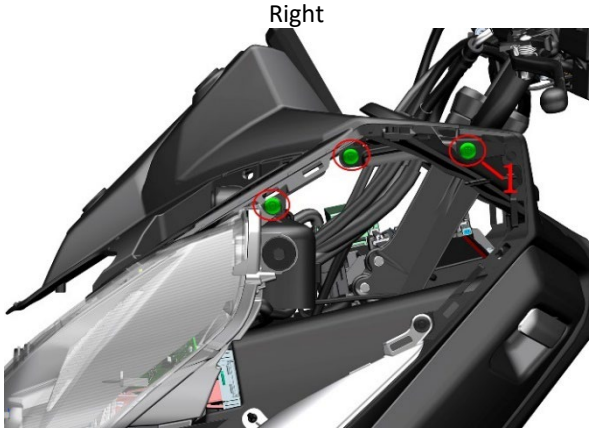

Left

b. Remove the 2 Phillips screws (2) with a Phillips screwdriver. Lift the instrument and instrument panel, and unplug the instrument wiring harness connector.

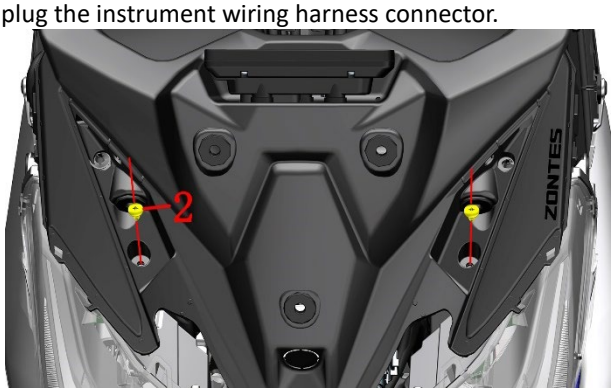

c. Use a 10# socket to remove the 3 M6 nuts (3), taking care not to lose the washer (4) and the cushion rubber pad (5); remove the instrument.

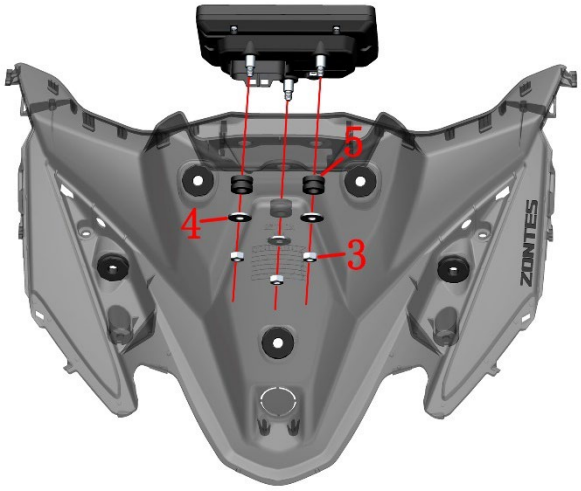

Removal of the left, right, and lower fairings of the head

a. Right fairing: Remove 4 expansion nails (1) with a #4 hex key or crochet hook; expansion nail ① needs to be removed from the inside after opening the right storage box; then remove 1 Phillips screw (2) on the inside with a Phillips screwdriver.

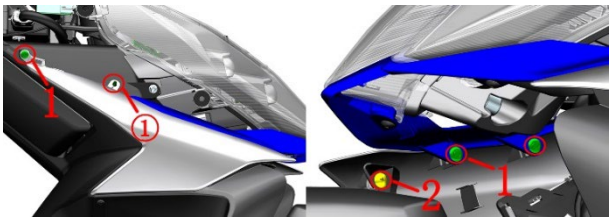

b. Left fairing: The disassembly method is the same as that of the right fairing.

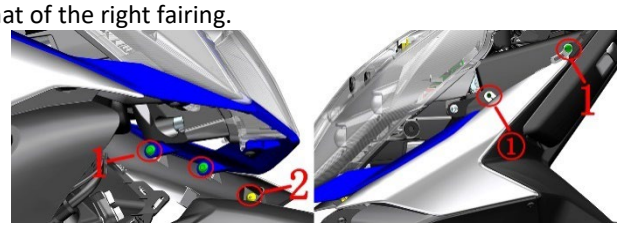

c. Lower fairing: Remove 4 crosshead screws (2) with a Phillips screwdriver.

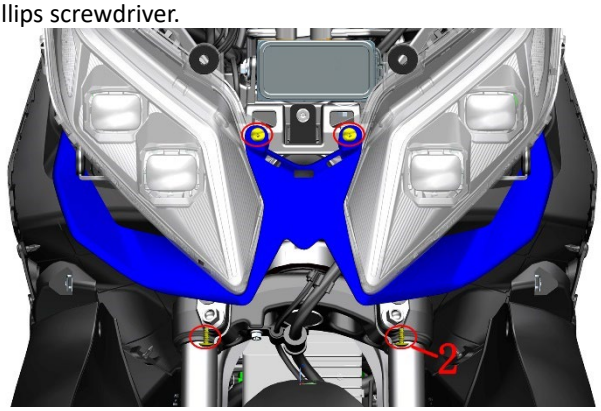

Removal of the front left and right headlights

a. Use a T25 Torx wrench to remove the 4 M6 Torx bolts (1). Shake it forward, unplug the wiring harness connector, and then the headlight can be disassembled.

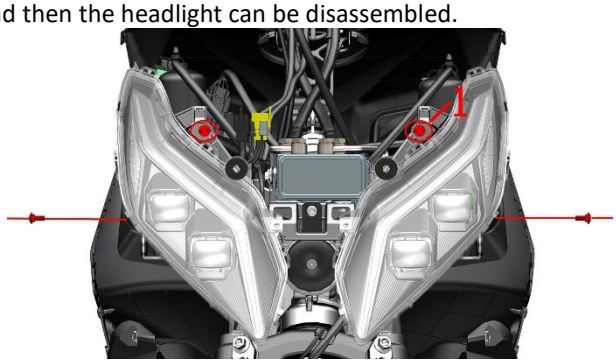

Disassembly of the front luggage compartment subassembly

a. Open the hook and the left and right storage box lids, then remove the 3 M6 hex socket bolts (1) with a T25 Torx wrench.

b. Use a 4# hex wrench or crochet hook to remove a total of 6 expansion nails (2) on both the left and right sides.

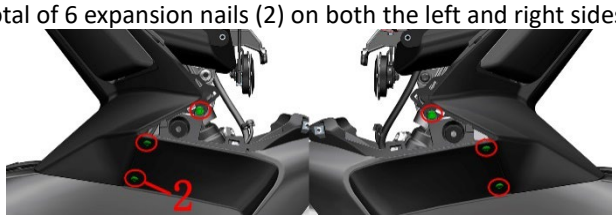

Removal of the seat cushion

a. Use needle-nose pliers to straighten the two latches (1) respectively, remove them from the seat cushion rotation shaft (2), and then pull out the rotation shaft to remove the seat cushion (3).

Disassembly of the storage box

a. Remove 1 expansion nail (1) with a 4# hexagon socket wrench, remove 6 shoulder bolts (2) with a T25 Torx wrench, pull the storage box (5) open from the rear side, unplug the connector of the seat lock (4) at the rear side, unplug the connector of the ambient light (3) on the right side, and then the rear storage box assembly can be removed.

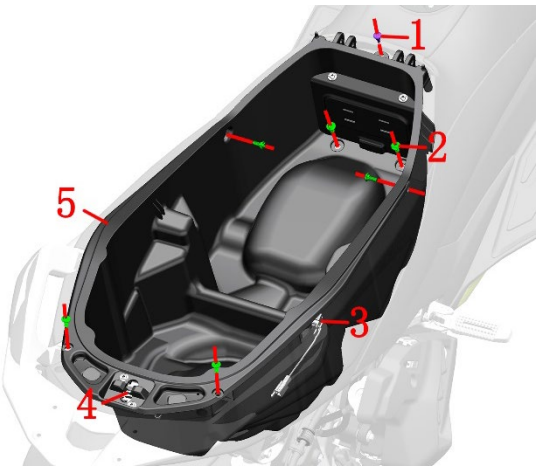

Disassembly of the left and right side covers

a. Step on the right pedal to open it, and use a T25 Torx wrench to remove bolt (1).

b. Pull out the four mushroom-shaped studs shown in the illustration from back to front, and then the right cover (2) can be removed.

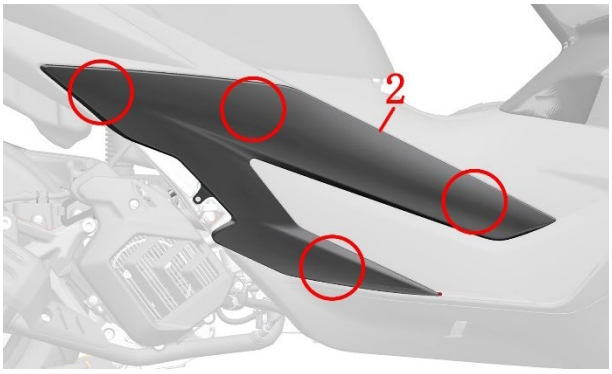

c. Remove the right cover (3) by referring to the above method.

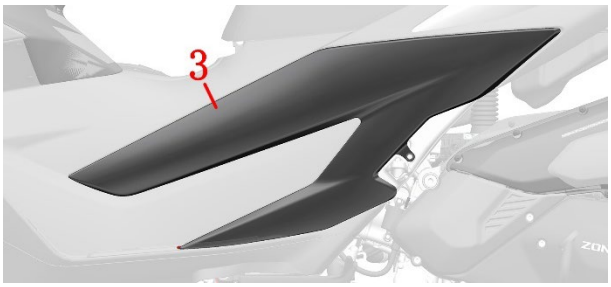

Disassembly of the enclosure around the middle

a. Use a Phillips screwdriver to remove 6 self-tapping screws (1), a T25 Torx wrench to remove 2 M6×16 Torx bolts (2), and a 4# hex key or other tool to remove 2 expansion nails (3). Gently pry the edge of the middle part (4) of the surround and lift it out upwards.

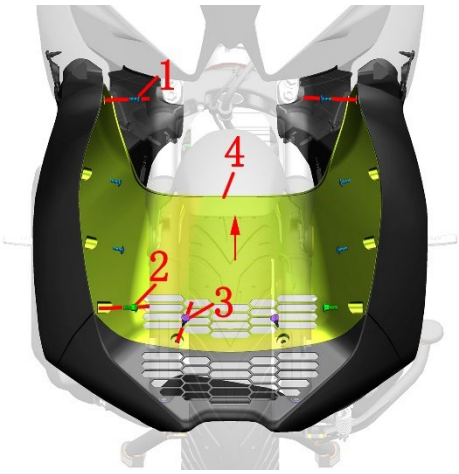

Disassembly of the enclosure bottom

a. First remove the left and right side covers and the middle part of the enclosure.

b. Use a flathead screwdriver to pry up and remove the upper rubber pad (1) and lower rubber pad (2) of the left pedal, as well as the upper rubber pad (3) and lower rubber pad (4) of the right pedal.

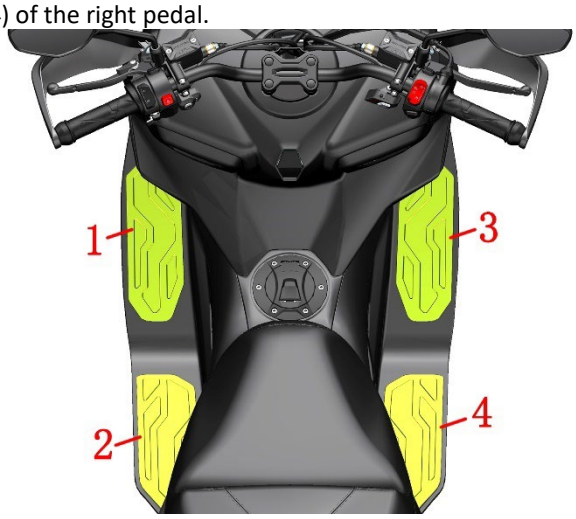

c. Use a 4# hex wrench to remove 2 expansion nails (1) on each side, and use a Phillips screwdriver to remove 4 self-tapping screws (2) on each side.

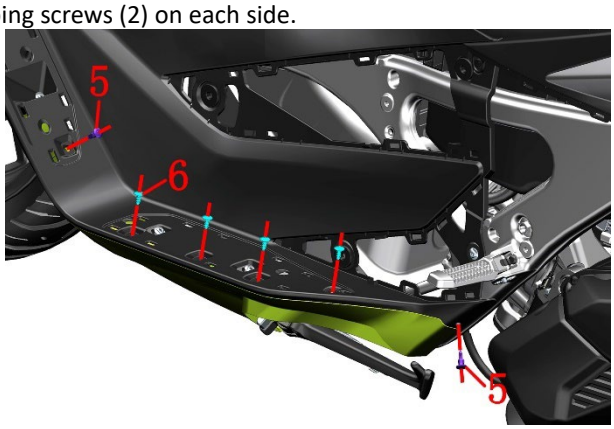

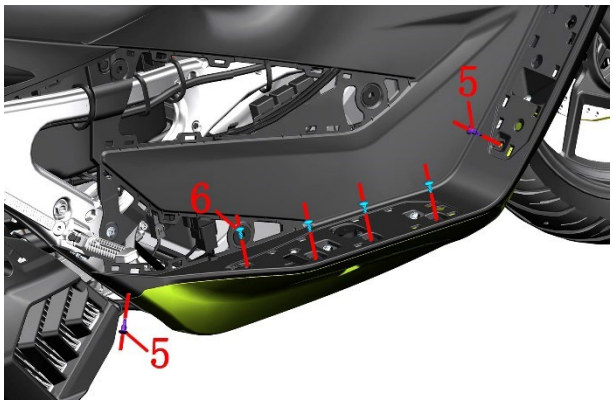

d. The enclosure bottom（7）can be slightly bent.

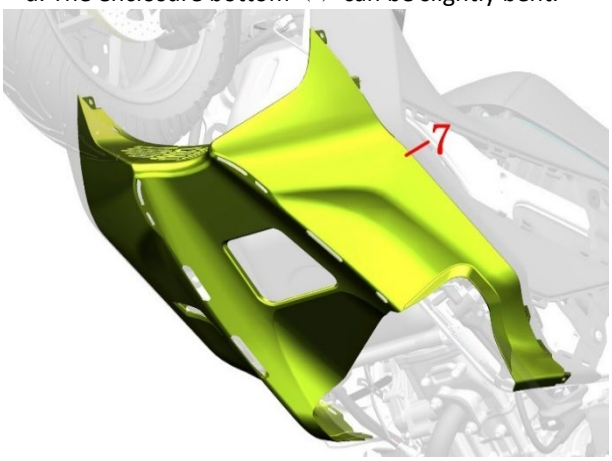

Removal of left and right pedals

a. First remove the side cover, fairing, head fairing, and rear storage box.

b. After removing the storage box, locate two expansion nails (1) and remove them using a 4# hex key.

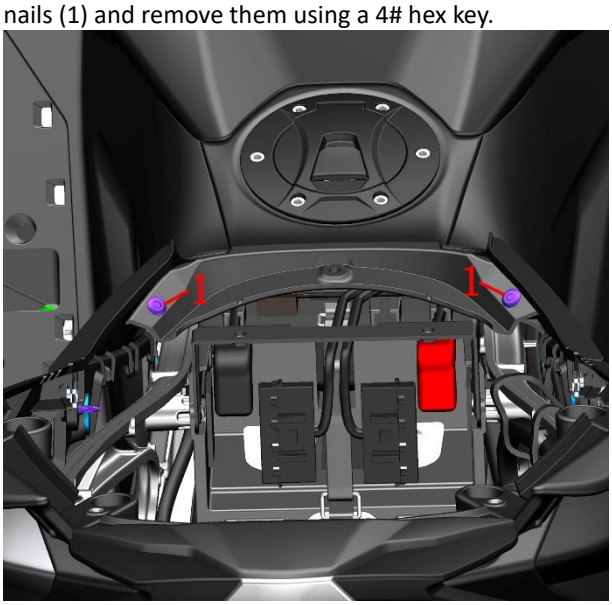

c. Remove 1 expansion nail (1) at the connection between the rear tail group and the right pedal (4) using a 4# hexagon socket wrench, remove 4 M6×14 shoulder bolts (2) using a T25 Torx wrench, and remove the 3 expansion nails (1) on the front side. Then the right pedal assembly (4) can be removed. Pay attention to keeping the round rubber side cover and self-tapping clamping plate on the right pedal assembly.

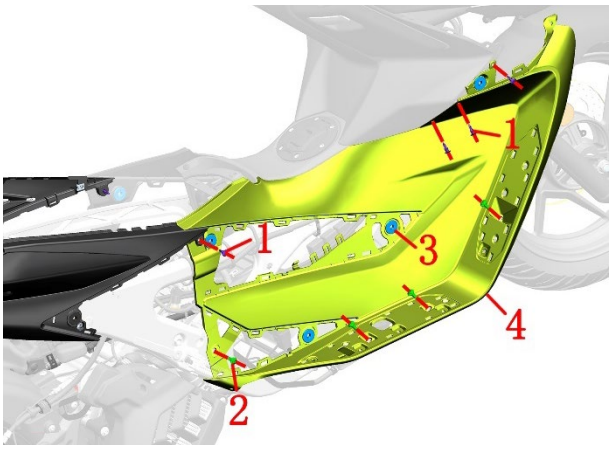

d. The disassembly methods for the left and right pedals are the same. The left pedal can be disassembled by referring to the above steps.

Removal of the fuel tank cover

a. Refer to the removal of the left and right pedals, and remove the left and right pedals.

b. Remove the 6 M5×45 bolts (1) using a 4# hexagon socket. The standard torque is 3～4 N.m. Pull out the fuel tank lock, unplug the connector of the fuel tank lock, and then remove the fuel tank lock (2).

c. Pull out the fuel tank cover (3) backward.

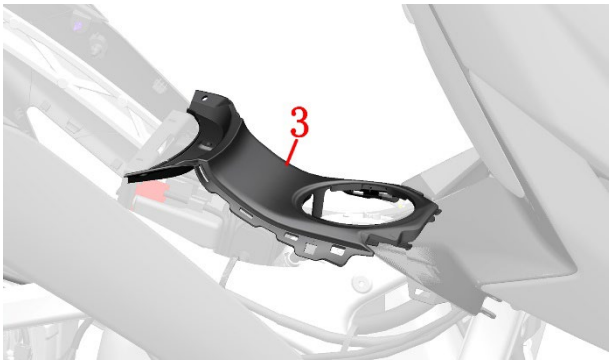

d. Remove all snaps and two mushroom snaps. Disconnect the position light connector and remove the left and right position light sub-assemblies.

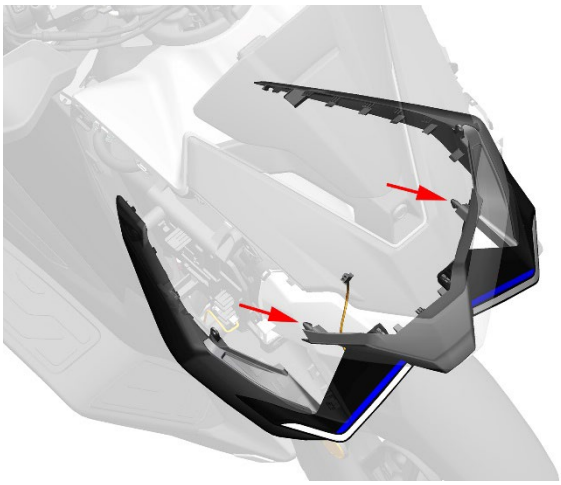

Removal of the left and right decorative covers of the tail skirt

a. Use a trim removal tool or crochet hook to pry up the left rear tail skirt trim cover. The tail skirt trim cover is secured by expansion clips and retaining slots on the trim panel (removing the trim cover does not require removing the seat cushion). The specific locations are as shown in the figure, where (1) indicates the position of the expansion clip. Be careful not to lose the expansion clip.

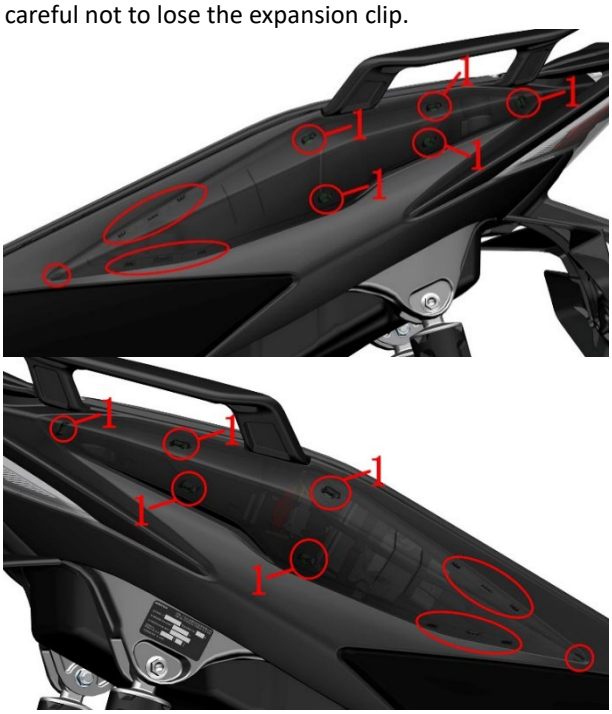

Removal of the rear armrest

a. If you need to remove the rear armrest, refer to the section on removing the rear storage box.

b. Use a T25 Torx wrench to remove the 2 M6 bolts (1), then take off the tail light cover. Note that the bolt (1) first passes through the Rear Skirt Assembly, and then mates with the position where the rear grab handle passes through in the diagram. After that, use a T45 Torx wrench to remove the 4 M8 bolts (2) that secure the left and right rear grab handles, and then remove the rear grab handles.

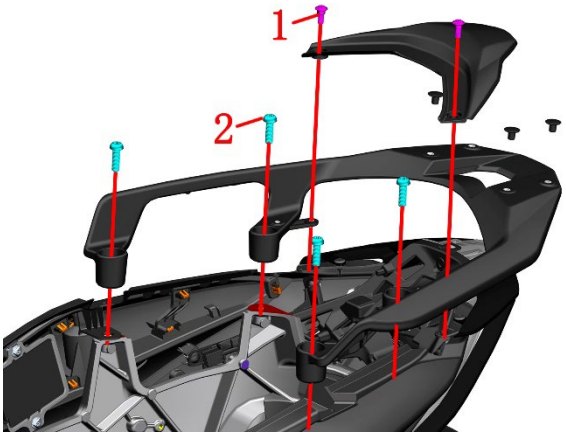

Rear Skirt Assembly Disassembly

a. Use a T25 Torx wrench to remove the two M6 bolts (1), and use a pick to remove the two expansion nails (2).

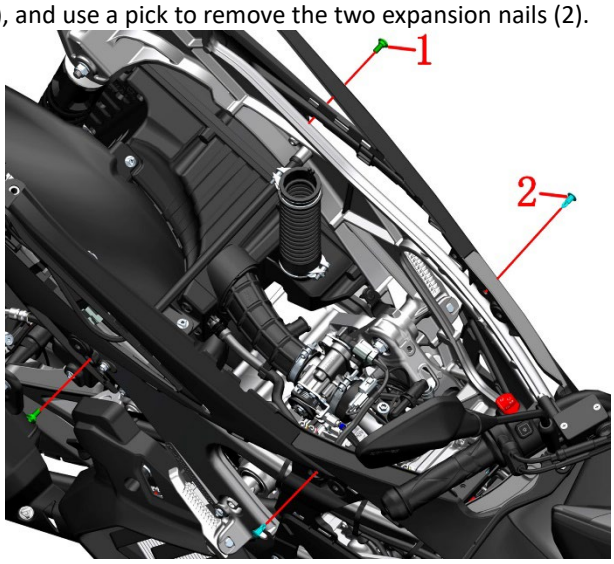

b. Use a T25 Torx wrench to remove the two M6 bolts fixed on the right tail skirt, take out the controller, unplug the plugs of electrical components such as the taillight, and organize the wiring harness.

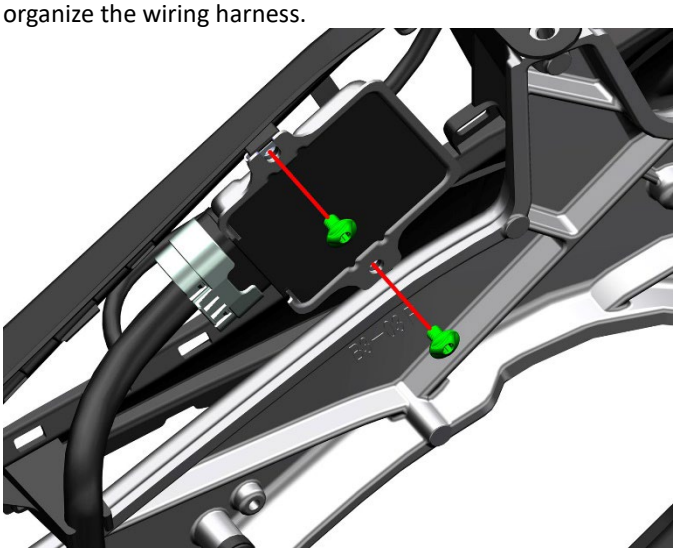

c. Remove the three M6 bolts as shown in the figure using a T25 Torx wrench, and then the rear skirt assembly can be removed.

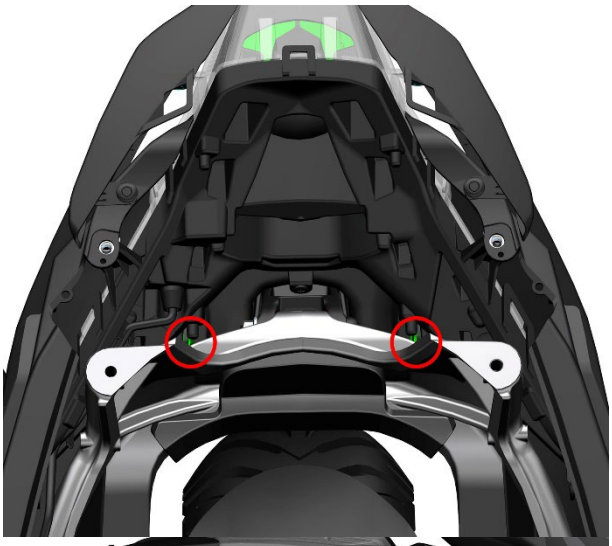
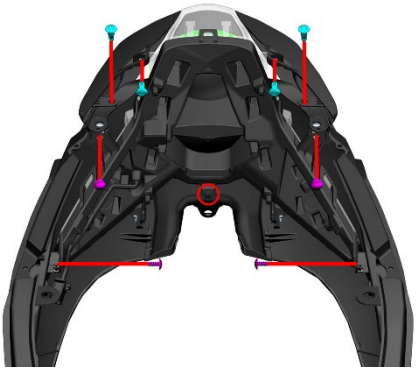
d. As shown in the figure, after removing 4 expansion nails with a pick and 5 self-tapping screws with a Phillips screwdriver, the component can be disassembled. Note that the clamping plate should not be lost during disassembly.