ZT350-V1 (EURO V&EURO +)

Service manual

2026/10/14

Contents

Table of Contents Page

0 Table of Contents 1

1 Frame component

1.1 Electrical Device component-1 8
Main harness, dump switch, relay, flasher, rectifier, ignition coil

1.2 Electrical Device component-2 9
Flameout switch, horn, wake-up switch

1.3 Frame plastic parts 10
Set clamp, side cover round glue, fuel tank liner limit glue

1.4 Directional Column component 11
Lower plate component

1.5 Frame, side bracket 12
Side bracket

1.6 PKE component 13

2 Frame & engine combination

2.1 Engine decorative cover components 14
Engine left rear cover,right cover decorative,drain the coolant

2.2 Frame & Engine Combination1 15
Disassemble the rear shock absorber rod plate

2.3 Frame & Engine Combination 2 16

2.4 Frame & Engine Combination 3 17

2.5 Frame & Engine Combination 4 18

3 Intake system components

3.1 Air filter components 1 19
Disassemble air filter components

3.2 Air filter components 2 20
Disassemble carbon canister, air filter

3.3 Throttle body parts 21

3.4 Replace the air filter element 22

4 Rear wheel and rear fork component

Contents

Table of Contents Page

4.1 Adjustment chain..... 23
4.2 sprocket guard..... 24
Removing the sprocket guard
4.3 Sprocket assembly 1..... 25
4.4 Sprocket assembly 2..... 26
Disassemble the sprocket assembly
4.5 Rear wheel component..... 27
Decomposed rear rim component
4.6 Rear wheel axle component..... 28
Demolition of rear wheel bearing, rear disc brake disc, rear sub-mud assembly
4.7 Rear sub-slab assembly 1..... 29
Vice fender extension cable
4.8 Rear auxiliary mud plate assembly 2..... 30
Disassembled rear mud plate bracket assembly
4.9 Rear auxiliary mud plate assembly 3..... 31
Disassembled rear mud plate bracket assembly
4.10 Rear turn signal after sale parts..... 32
Rear left and right turn signals and rear license plate lights for sale
4.11 Chain adjuster assembly..... 33
Disassemble chain adjuster and maintain
4.12 Rear mud board..... 34
4.13 Rear shock absorption..... 35
Demolition after shock absorption, rear shock absorption adjustment
4.14 Rear shock absorption 1..... 36
4.15 Rear shock absorption 2..... 37
4.16 Rear shock absorption 3..... 38
4.17 Rear fork component..... 39
Decomposed flat fork component
4.18 Replace the rear brake pads..... 40
4.19 Rear brake main pump adds brake fluid..... 41

5 Pedal component

5.1 Pedal height adjustment..... 42
Shift lever, brake pedal height adjustment

Contents

Table of Contents Page

5.2 Front right pedal mounting position adjustment..... 43
5.3 Front left pedal mounting position adjustment..... 44
5.4 Front right footrest component..... 45
Decompose the Front right pedal component
5.5 Front left footrest component..... 46
Decompose the Front left pedal component
5.6 Shift lever assembly..... 47
5.7 Front footrest bracket..... 48
5.8 Rear pedal assembly..... 49
5.9 Rear right pedal bracket components（Old model）..... 50
5.10 Rear left pedal bracket components（Old model）..... 51
5.11 Rear right pedal bracket components（New model）..... 52
5.12 Rear left pedal bracket components（New model）..... 53

6 Cooling system component

6.1 Change the oil..... 54
6.3 Replace the oil filter..... 55
6.2 Add coolant..... 56
6.4 Radiator cover component 1..... 57
Disassemble the radiator covercomponent
6.5 Radiator cover component 2..... 58
6.6 Vice water tank components..... 59
6.7 Draining coolant..... 60
6.8 Main tank component 1..... 61
Disassemble radiator component
6.9 Main tank component 2..... 62
6.10 Oil cooler component..... 63

7 Front fork component

7.1 Throttle/clutch cable clearance adjustment..... 64
Adjust the throttle line, clutch cable free travel
7.2 Light height adjustment..... 65
7.3 Replacement clutch cable..... 66
7.4 Replace the throttle line..... 67

Contents

Table of Contents Page

7.5 Steering adjustment..... 68
Adjustment steering device
7.6 Add brake fluid, rocker adjustment..... 69
Add brake fluid, brake rocker adjustment
7.7 Replace the front brake pads,front brake caliper mounting plate..... 70
7.8 Front wheel component..... 71
Disassemble the front wheel, front disc brake disc, front axle component
7.9 Front mud board & wheel speed sensor component..... 72
Decompose front wheel speed sensor component, front mud plate component
7.10 Headlights assembly 1..... 73
Headlights assembly, cable plug
7.11 Headlights assembly 2..... 74
Remove headlights
7.12 Headlights assembly 3..... 75
Remove headlights upper bracket, front turning signal
7.13 Right hand component..... 76
Remove right rear view mirror, right hand rubber sleeve, balance block， Replace the front brake switch
7.14 Left hand component..... 77
Demolition handle, clamp, instrument component
7.15 Directional lever、TFT Instrument..... 78
Demolition handle, clamp, TFT instrument component
7.16 Front shock absorber, upper plate component..... 79
Front shock absorber, faucet lock, upper plate component
7.17 Uplink plate, direction handle block component..... 80
Disassemble the block, the upper plate
7.18 ABS brake system-1..... 81
Remove the control unit protection cover, releasing brake fluid, hydraulic control unit
7.19 ABS brake system-2..... 82
Remove the front disc brake main pump and oil pipe
7.20 ABS brake system-3..... 83
Remove the rear disc brake main pump and tubing
7.21 ABS brake system-4..... 84
Disassemble the disc brake caliper and tubing,rear wheel speed sensor

Contents

Table of Contents Page

8 Fuel tank cover component

8.1 Fuel tank cover component…… 85

Disassemble the fuel tank cover component

8.2 Tank middle cover component…… 86

Decompose the fuel tank cover, fuel tank cover, fuel tank lock

8.3 Fuel tank outer cover components…… 87

Disassemble the fuel tank outer cover ,rotating bracket

8.4 Fuel pump…… 88

Disassemble the fuel pump, fuel tank buffer rubber

8.5 Fuel tank front decorative cover…… 89

Disassemble the fuel tank front decorative cover,USB charging cable

8.6 Fuel tank decorative cover lower part…… 90

8.7 Fuel tank decorative cover components 1…… 91

8.8 Fuel tank decorative cover components 2…… 92

9 Side cover component

9.1 Side cover component…… 93

Decomposition side cover component

10 Guard bar sembly

10.1 Guard bar assembly 1…… 94

Disassemble the guard bar outer parts

10.2 Guard bar assembly 2…… 95

Disassemble left and right guard components

10.3 Guard bar assembly 3…… 96

Disassemble the left and right guard bar components

10.4 Engine decorative cover components…… 97

Disassemble the engine decorative cover

11 REAR COVER COMPONENT

11.1 Battery component…… 98

11.2 Backrest assembly component…… 99

Disassemble the backrest,Backrest rubber

11.3 Tail skirt taillight component 1…… 100

Contents

Table of Contents Page

Disassemble PKE single antenna, buzzer

11.4 Tail skirt taillight component 2 101

Disassemble the tail skrit left and right decorative cover,decorative cover bracket

11.5 Tail skirt taillight component 3 102

Disassemble the rear aluminum alloy bracket

11.6 Tail skirt taillight component 4 103

Rear skirt taillight component

12 Cushion component

12.1 Cushion 104

Discomponent and component cushion; seat cushion rubber separately purchased parts

13 Muffler component

13.1 Muffler component 1 105

13.2 Muffler component 2(Euro V) 106

13.3 Muffler component 3(Euro V+) 107

14 Lower shroud component

14.1 Lower shroud component-1 108

Remove the shroud component, shroud bracket

14.2 Lower shroud component-2 109

Decompose the lower shroud component

Contents

Table of Contents Page

All the information, illustrations and photographs collected in this manual are compiled according to the latest products. However, there may be some inconsistencies between your motorcycle and this manual due to the continuousimprovement of the product and other changesFor colors or upgrades, please refer to the part codes on the official website. This manual will not be listed in detail; If the part names in this manual are inconsistent with the official website, the official website shall prevail. This manual is compiled on the basis of the chinese version of ZT310-V1 version. The export version is different from the chinese version with only a few parts, such as decals, ECU version, muffler catalyst, etc. Although the status of such parts are different, the disassembly method is same, so refer to the chinese manual.

©Guangdong Tayo Motorcycle Technolog Co.
Ltd All rights reserve

Fig.1 FRAME&ELECTRONIC PARTS COMPONENT		Electronic parts COMPONENT-1	CHK ADJ	
NO.	PART NO.	PART NAME	QTY	CAUTION
1		ZT350-V1 cable assembly (A)	1	
2	1224100-030000	Pin tie (Black 4.8×130)	2	
3	1226000-218000	Grade 0 flame retardant tie (black 3.6×295)(5 pcs/after-sale)	3	
4	1244200-202000	ZT310 relay rubber sleeve(after-sale)	5	
5	1244100-082000	ZT250-R dump switch sleeve	1	
6	1184100-002000	ZT250-S dump switch	1	
7	1180301-004000	HJ150-3 square flasher (LED)(after-sale)	1	
8	1251100-101000	Non-standard bolt M6×12 (304 stainless steel)	4	
9		Electronic cushion lock block	1	
10	1274100-058000	ZT310 Electric seat lock	1	
11	1184300-002000	ZT350 starting relay	1	
12	1186001-018000	ZT250-S Four-pin Normally Open Relay(after-sale)	5	KH-1A4T
13	1224300-110000	Reverse buckle Velcro strap (20×200mm)	6	
14	1224300-111000	Reverse buckle Velcro strap (20×300mm)	2	
15	1224300-093000	Reverse buckle Velcro strap (20×150mm)	4	
16	1251100-102000	Non-standard bolt M6×16 (304 stainless steel)	2	
17	1274200-171000	ZT310-V relay bracket	1	
18	1251300-207000	Non-standard cover type 9 degree nut M6×13 (environmental color Zinc)(5 pcs/after-sale)	2	
19		MSE6.0 controller-ZT184MP	1	
20	1274200-268000	ZT310-VX Bosch ECU bracket	1	

●Main harness

Different plug-in methods are different, please unplug all the electrical components connected to the main thread according to the actual operation. It needs to use a screwdriver, forceps, scissors and other tools to assist.The binding (3) can be picked out by using scissors.

CAUTION：

●Please notice the limit of the bracket when dismantling flasher and dump switch sleeve, beware of hurting your fingers.

PROCEDURE:

●Flasher and dump switch

Remove the rubber sleeve that connects the flasher (7) to the mounting bracket on the frame, and remove the dump switch with the same method, then separate the dump switch sleeve (5).

●Relay and ECU

Pull out the rubber sleeve(4) on the right side of the frame and upper the air filter,and then pull out the EFI relay(12). Find the starting relay(15) above the air filter, pull off the sheath of the harness, remove the self-contained nut and remove the relay from the relay support(17). Remove the bolt (16) with 4# hexagon socket and remove the bracket(17). Unplug the plug of the engine controller (19) on the left and remove the nut (18) with a 10# sleeve. Remove 2 bolts (8) with 4# socket head and then remove ECU bracket(20).

●Seat lock

Take off the plug of the seat lock , and cut off binding (3) . Use a 4# inner hexagon to remove the front bolt (8) or (16), and remove the guide block (9).The old model of seal lock block used with 6*12,the new model used 6*16.remove the 2 rear bolts and remove the electronic cushion lock (10) ankd the rear tail skirt bracket(11).

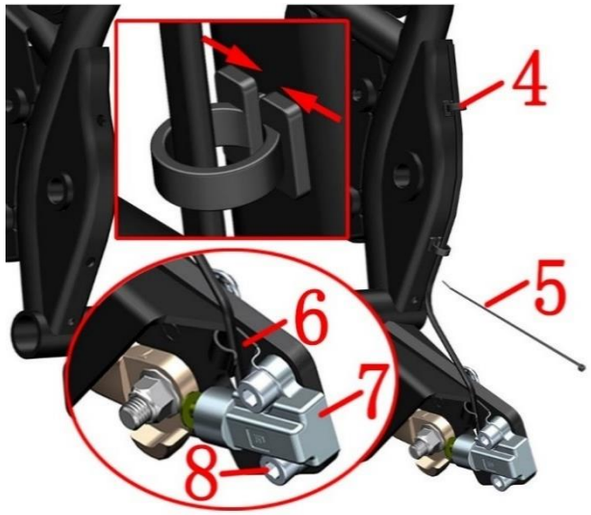

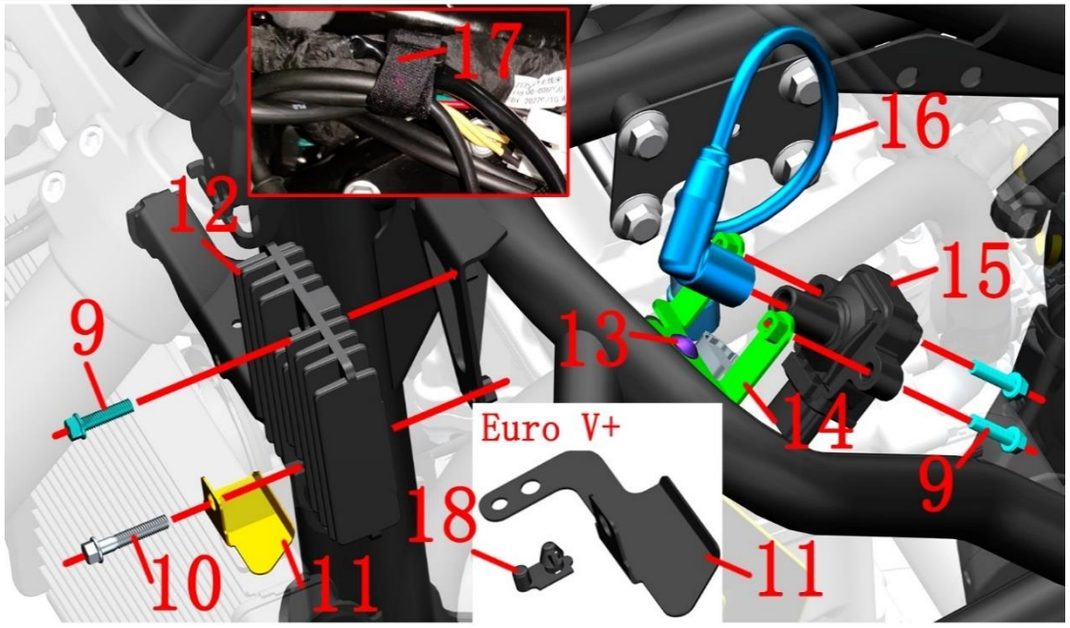

Fig.2 FRAME&ELECTRONIC PARTS COMPONENT		Electronic parts COMPONENT-2	CHK ADJ	
NO.	PART NO.	PART NAME	QTY	CAUTION
1	1251112-001093	M6×16 Hexagon flange bolts (color zinc)	1	
2	1274300-065000	ZT350-VX front oil pipe bracket	1	
3	1184200-004000	ZT310 horn	1	
4	1274100-017000	ZT250-S cable buckle	2	
5	1226000-218000	Grade 0 flame retardant tie (black 3.6×295)(5 pcs/after-sale)	2	
6	1274100-095000	ZT250-S Flameout switch wire fixing bracket	1	
7	1184100-012000	ZT250-S shut down switch	1	
8	1250205-040095	GB70.1 inner hex bolt M8×16(color Zinc)	2	
9	1251100-061093	M6×22 Hex flang bolt thread level 8.8 (color zinc)	3	
10	1251112-002093	M6×30 Hexagon flange bolts (color zinc)	1	
11	1274300-067000	ZT350-V Water outlet pipe anti-wear bracket	1	
12	1186200-013000	ZT310 Rectifier (350W)	1	
13	1251100-101000	Non-standard bolt M6×12 (304 stainless steel)	1	
14	1274300-064000	ZT350-V1 ignition coil bracket	1	
15	1050958-006000	ZT350 ignition coil body	1	
16	1050958-007000	ZT350 EFI high voltage line	2	
17	1224300-110000	Reverse buckle Velcro strap (20×200mm)	1	
18	1224200-282000	ZT350-R cable plastic staple(after-sale)	1	Euro V+

PROCEDURE:

●Horn

Take off the plug of horn take the horn (3) by one hand, using 8# plum wrench rotate the screw (1) by another hand remove the holder (2) then take off the horn.

●Flameout switch

Find and take off the plug of the flameout swich (6) press and take off the cable clip (4) cut ribbon (5) .Using the 6# inner hexagon tool, remove the bolts (8)、the holder (6) and the flameout switch (7) .

●Rectifier

After unfastening the tie strap (17) then find and remove the rectifier plug, Using 8# sleeve remove the bolt (10), remove the outlet pipe bracket(11)； Using 8#sleeve remove the bolt (9) and remove the rectifier (2).

●Ignition coil

Pull out the high-voltage wire (16) then end of the spark plug, pull out the end of the ignition coil body and remove it. Remove the bolt (9) with 8# sleeve and remove the ignition coil body (9). Then using 4# hexagon socket remove the bolt (13) and remove the high-pressure package support (14).

CAUTION：

●Do not pull the cable hard when removing the sub-mud switch.

●The replacement of the spark plug and the matters needing attention are described in the instruction manual.

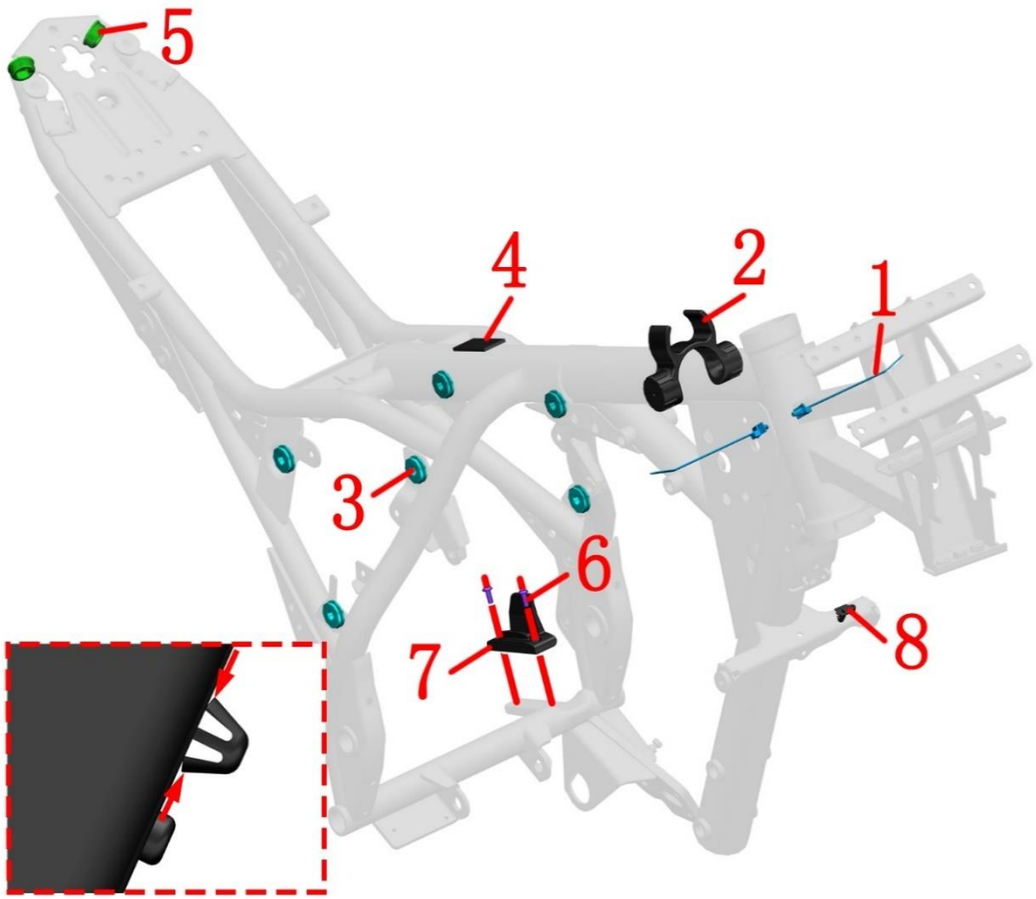

Fig.3 FRAME&ELECTRONIC PARTS COMPONENT		Frame plastic parts	CHK ADJ	
NO.	PART NO.	PART NAME	QTY	CAUTION
1	1224100-030000	Pin tie (Black 4.8×130)	2	
2	1244100-019000	ZT250-S fuel tank spacing glue	1	
3	1244100-138000	ZT250-S Side cover round rubber(5 pcs/after-sale)	6	
4	1241200-125000	HJ125-6 Battery rubber gasket(5 pcs/after-sale)	1	
5	1244100-061000	ZT250 anti-water rubber of frame	2	
6	1250205-038000	GB70.2M5×12 (stainless steel)	2	
7		Chain abrasive brick	1	
8	1224200-008000	ZT310-R cable plastic staple	1	

PROCEDURE:

●Inner fuel tank ficx glue cushion

Use both hands to hold the two ends cylinder parts of the inner fuel tank limited glue cushion (2) and should push it out.

● Side cover cushion

Remove the side cover cushion (3) with your hand directly.

●Battery cushion

Put off the battery cushion (4)directly by hand.

●Frame waterproof rubber plug

Remove the frame waterproof rubber plug (5) with your hand directly.

●Wear block

Use a 3# hexagon socket to remove the 2 bolts (6) and then remove the wear block (7).

●Cable plastic staple

Use a pair of pliers to clamp in the direction of the arrow with a little force and then push thecable plastic staple(8) out of the frame.

CAUTION：

●It must be dismantled them first, such as the cushion, fuel tank cover, inner fuel tank, sider cover, tail dress and so on.

●All parts should be correctly assembled.

●The plug strap (1) is a non-detachable structure and it is not recommended to cut it directly. It is difficult to remove the broken portion of the buckle that is forcibly removed from the frame triangular reinforcing plate.

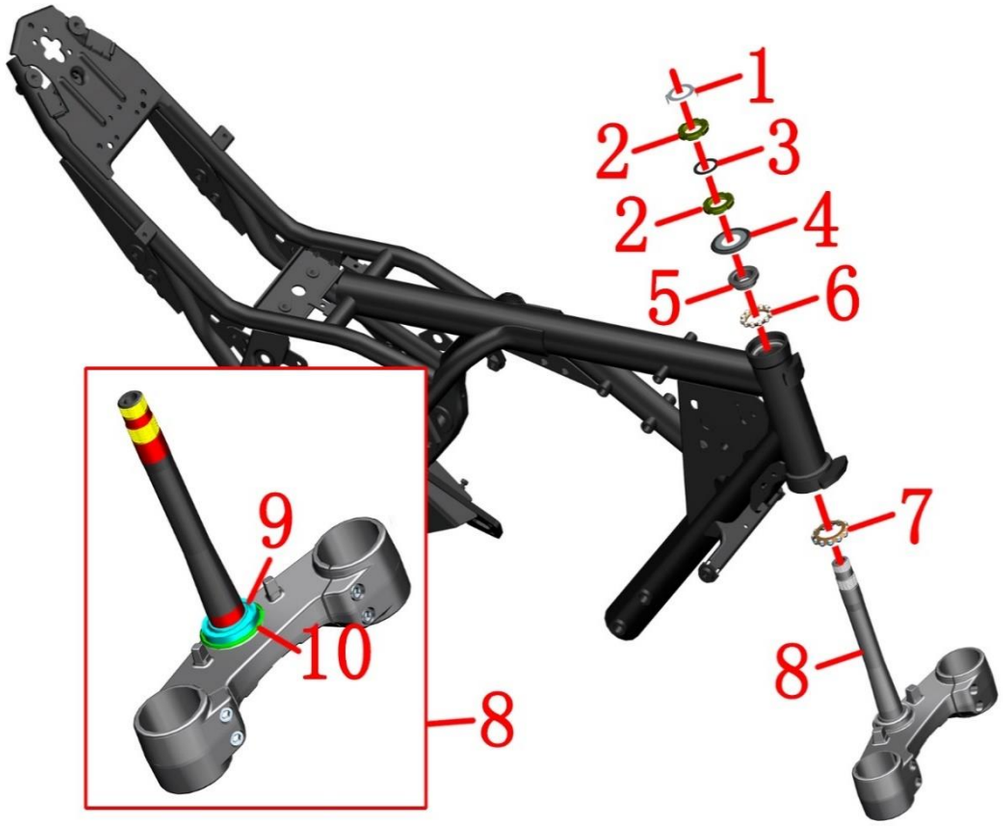

Fig.4 FRAME&ELECTRONIC PARTS COMPONENT		Steering rack component	CHK ADJ	
NO.	PART NO.	PART NAME	QTY	CAUTION
1	1134100-040000	ZT250-S Adjusting nut locking washer(5 pcs/after-sale)	1	
2	1251300-046093	ZT250-S direction column adjusting screw nut M24X1	2	
3	1244100-135000	ZT250-S Adjusting nut rubber gasket (5 pcs/after-sale)	1	
4	1244300-014000	ZT350-R upper dust cover	1	
5	1130900-053000	ZT250-S shaft ring (after-sale)	1	
6	1130900-054000	ZT250-S conjoined steel ball (5 pcs/after-sale)	1	
7	1134300-002000	ZT350-R conjoined steel ball	1	
8	4094300-002051	ZT350-R lower connection Board (with bead top)	1	
9	1134300-003000	ZT350-R lower shaft ring	1	【1】
10	1244300-015000	ZT350-R dust cap(down)	1	

PROCEDURE:

●Dissembly

Remove the lock washer (1).

Remove the top adjusting nut (2) by using a special four-jaw or hook wrench tools.

Remove the rubber pad (3).

With one hand to hold down the down connected plate assembly (7), the other hand use a special four-jaw set or hook wrench to remove the adjusting nut (2).

Remove the down connected plate component (8).

Remove the upper dustproof cover (4).

Remove the axletee ring (5) of the upper riser and the steel ball (6).

Remove the steel ball(7) on the down connected plate component .

●Assemble

When reassembling, the conjoined steel beads should be painted lubricating grease,attention to the dosage.

The torque of rating nut which closes to upper dustproof cover is required to about 14N.m so as to be able to rotate out of nimbleness.

The top adjusting nut only needs to rotate to the bottom of the nut groove alignment, not too tight to prevent the rubber pad (3) from deformation too large.

●When braking, the front fork moves slightly or the steering handle swings

First check whether the front tire pressure is the recommended pressure under normal temperature: normal temperature: Standard 280kpa.

If it is lower than the recommended pressure, inflate the front tire pressure to 350kPa first, and then deflate to the standard pressure for test run to check whether it is relieved. If not, support the front wheel and rotate it to check the tread. If there is eccentric wear or deformation, replace the front tire. If not, readjust the adjusting nut.

CAUTION：

●Remove the head part component, handlebarcomponent and front shock absorber component first.

●Please pay attentin to fix the awaiting repair motorcycles during disassembly,prevent dumping by accident.

●Please check whether the steel beads of the conjoined body have abnormal phenomena such as partial abrasion and rust.If YES, please change, if not, please be sure to grease the old grease and repaint the lubricating grease on it.

●It must be to check whether the steel ball is available during reassembly.

●It must be reasonable to adjust the steering, too loose will cause the locomotive to brake slightly, and the locomotive will shake slightly, too tight can lead to inflexibility, resulting in safety hazards.

●If you have the ability and the right tool, you can change the shaft ring (9) and the dustproof cover (10).During the replacement process, pay attention to the protection of the lower connected plate. After replacement, it must be to check the parallelism of the column and the damping hole, the vertical degree of the vertical column and the lower connected plate.

●【1】the down connected plate component (8), has been contains the lower shaft ring(9) and the dust cap (10).

Fig.5 FRAME&ELECTRONIC PARTS COMPONENT		Frame, Side support	CHK ADJ	
NO.	PART NO.	PART NAME	QTY	CAUTION
1	4014300-015000	ZT350-V1 frame after-sales assembly(including seat/310M nameplate)	1	
2	1130900-052000	ZT250-S upper steel bowl (after-sale)	1	
3	1134300-001000	ZT350-R lower seat ring	1	
4	1260300-079093	ZT250-S side stand spring(after-sale)	1	
5	1274200-289000	ZT310-T side bracket (dark gray)	1	
6	1251100-088094	Non-standard bolt M10×1.5×43(Dacromet)	1	
7	1251700-025091	ZT250-S side stand sleeve	1	
8	1251300-057093	Non-standard nut M10×1.5(Dacromet)	1	

PROCEDURE:

●Checking the cushion loop

Checking whether the seat ring (2) and (3) is frayed, If yes, it needs to be replaceds. Fix the seat ring well and paint the lubricating grease on it with appropriate tool.

●Sider support

The thick steel wire shall be rolled into a circle and put into the spring (4) hook. Pay attention to ensure that the steel wire cannot be loosened or scattered during the pulling process. And guard against the personal injury caused by spring contraction, remove the nuts (8) and bolts (6) with the 14# sleeve. Remove the side support (5) and bush (7), paint the lubricating grease on the bush(7) when re-assembling ,then put it into the frame (1).

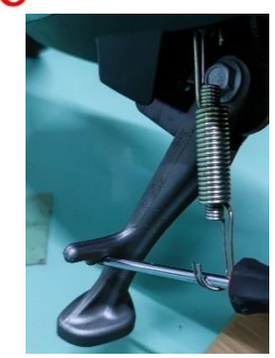

CAUTION：

●Remove the wind deflector component, handle bar component, steering column component first.

●Paint the lubricating grease on the cushion ring to decrease the rotary resistance of front forklift.

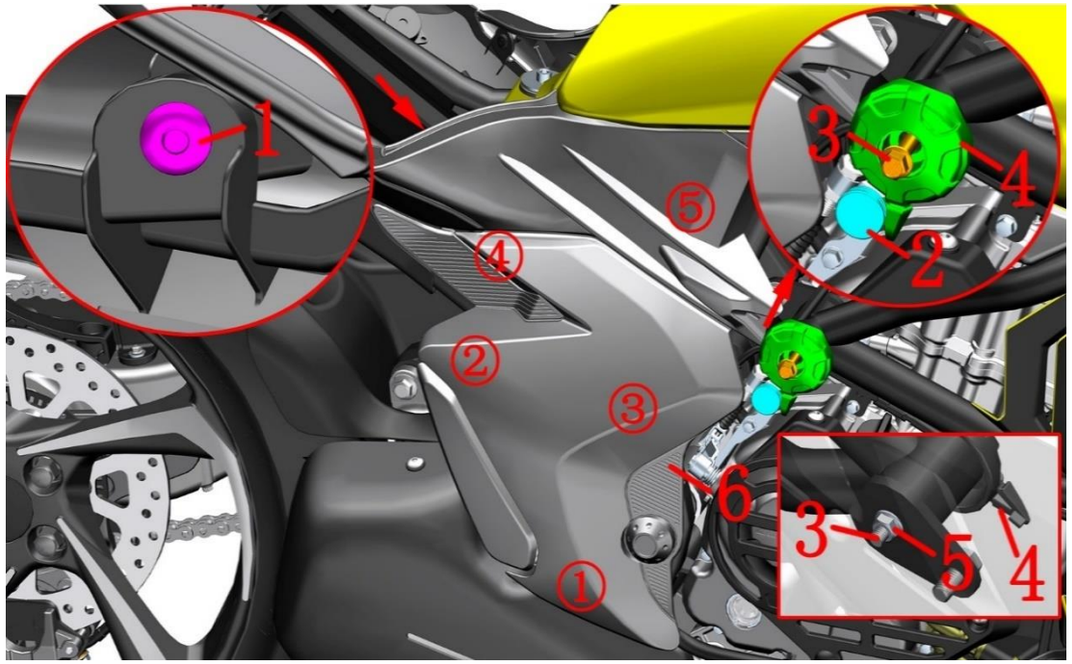

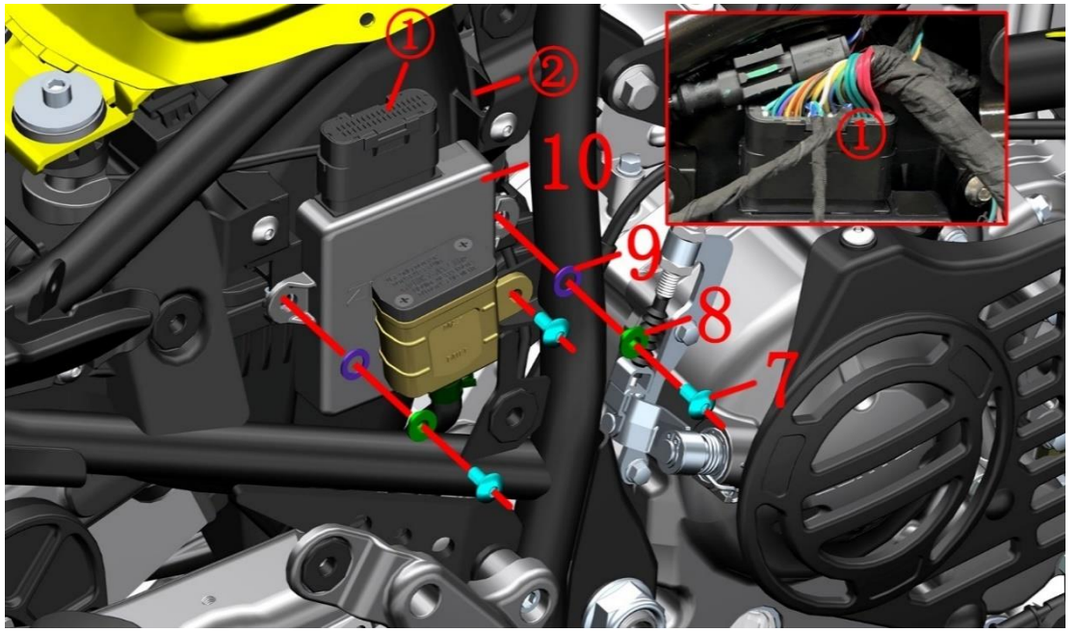

Fig.6 FRAME&ELECTRONIC PARTS COMPONENT		PKE component	CHK ADJ	
NO.	PART NO.	PART NAME	QTY	CAUTION
1	1224100-089000	ZT250-S Expansion nail(5 pcs/after-sale)	1	
2	1244100-061000	ZT250 anti-water rubber of frame	1	
3	1250105-018091	GB5789 M8×70(white zinc)	1	
4	4044201-256051	ZT310-V fender ball (dark grey matte)	1	
5	1250303-011093	GB6177.1M8(color zinc)	1	
6		Right side cover	1	【1】
7	1251100-101000	Non-standard bolt M6×12 (304 stainless steel)	3	
8	1274100-155095	Flanged bushing φ6.2×φ8.4×3.5 + φ14×1.5(5 pcs/after-sale)	2	
9	1241200-124021	hanging bushing buffer rubber (φ8.5×φ14×1)(5 pcs/after-sale)	2	
10	1184300-024100	2.5 Generation PKE Assembly (including induction key)	1	

PROCEDURE:

●Side cover

Remove the seat cushion first, and then remove the expansion nails (1) at the connection between the right side cover (6) and the rear cover. Remove the waterproof rubber plug (2), after holding the nut (5) with 13# plug wrench then using a 12# sleeve to loosen the bolt (3) by 5 threads, without completely removing it. Pull out the decorative ball (4) and rotate it clockwise to stagger the groove on the right side cover. Pull out the right side cover in the order of ①-②-③-④-⑤. Turn the right side cover component over to the back, find the plug of the induction antenna, pull it off and remove the right side cover component.

●PKE Controller

Unplug the PKE plug,use a 4# allen wrench to remove the two bolts (6) to remove the PKE assembly (7) and ZT310PKE rubber sleeve(9);

●PKE bracket

Remove the bolt (7) at the oil cup with 4# hexagon socket and move the oil cup away to facilitate the disassembly of PKE. Pay attention to keep the oil cup cover upward all the time and do not reverse it. Use 4# hexagon socket to fix the two bolts (7) of PKE, remove the bushing (8) and buffer rubber (9), and then pull out the PKE plug ① to remove the PKE assembly (10).

CAUTION：

●Non-professionals are strictly prohibited to disassemble the PKE system components, otherwise it may cause permanent damage.

●Please refer to the driver's manual for PKE operating instructions.

●The button battery model used in the band version: CR1225.

●【1】If the part code is empty, it indicates that the part has multiple states or colors. For specific states, please find the corresponding state or color in the official website parts. Only the disassembly and assembly steps are explained here, and the color and status do not affect the disassembly and assembly process. This description will not be added if there is such a situation later in this manual.

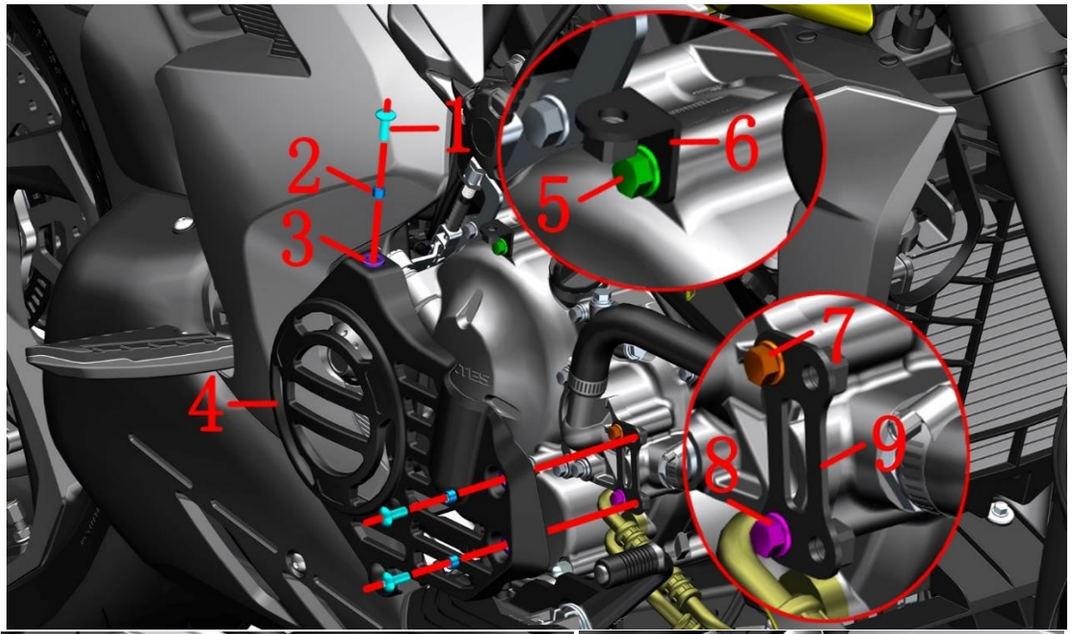

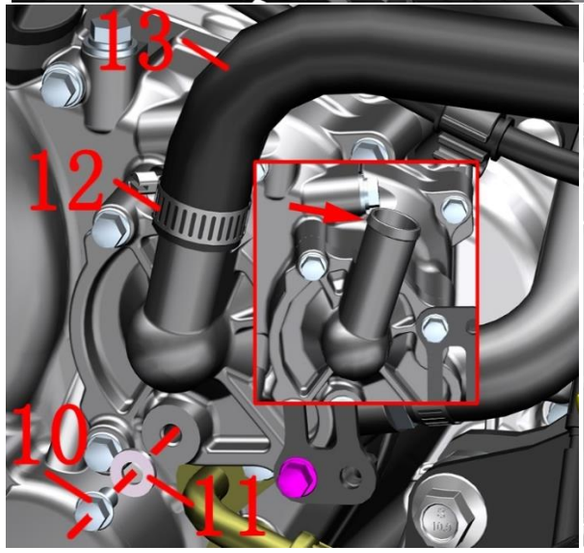

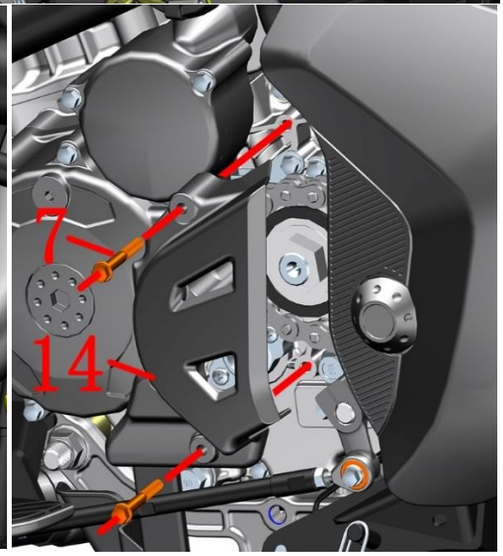

Fig.1 FRAME&ENGINE		Engine decorative cover components	CHK ADJ	
NO.	PART NO.	PART NAME	QTY	CAUTION
1	1251100-102000	Non-standard bolt M6×16 (304 stainless steel)	3	
2	1274100-018000	ZT250-S Anti-hot plate sleeve, muffler	3	
3	1246400-317000	ZT368T-G muffler hot plate rubber buffer(5 pcs/after-s	3	
4	1224200-157000	ZT310-V engine right cover trim cover	1	
5	1251112-005093	M6×75 Hexagon flange bolts (color Zinc)	3	10N.m
6	1274200-221000	ZT310-V engine right decorative cover bracket	1	
7	1251112-003093	M6×45 Hex flange surface 9.8 bolt (color Zinc)	3	10N.m
8	1251112-006093	M6×90 Hexagon flange bolts (color Zinc)	1	10N.m
9	1274200-220000	ZT310-V engine right decorative cover front bracket	1	
10	1251112-001093	M6×16 Hexagon flange bolts (color Zinc)	1	
11	1051654-002000	Combination seal 6×13×1.8	1	
12	1276001-055000	ZT310 Water pipe clamp (ϕ26)(after-sale)	1	
13	1244200-068000	ZT310-V engine inlet pipe	1	
14	4050854-002051	ZT310-R engine left rear cover (dark gray)	1	

PROCEDURE:

●Engine right trim cover assembly

Using 4# inner hexagon socket disassemble 3 bolts (1) and take out the right trim cover components.Remove the bushing (2)、buffer rubber (3) from the right trim cover components.Using 8# sleeve disassemble the bolts (5) and take out the bracket (6). Using 8# sleevedisassemble the bolts (7)、(8)and take out the bracket (9).

After removing the bracket ,scew the bols that holds the bracket back to the engine to prevent leakage.

●Put the coolant

After placing an oil pan or other container under the right side of the vehicle, tilt the vehicle to the right.

After wearing waterproof gloves with both hands, remove the bolt (10) with an 8# sleeve, and remove the combined sealing ring (11).

Drain the coolant with a funnel or other device. Opening the main tank cover can speed up the entire coolant drain of the cooling system.

Loosen the two clamps (12) with a flat-blade screwdriver and remove the boss indicated by the arrow.

Pull out the water inlet pipe (13) and then remove the clamp (5) from the water pipe.

Use a clean cloth to wipe off any remaining coolant on the surfaces of all parts.

● Engine left rear cover

Using 8# sleeve remove the bolt (7) disassemble the rear cover(14).

CAUTION：

●The 3 M6 bolts of the engine trim cover bracket must be coated with thread fastening glue before reassembly, with a torque of 10N.m.

●The coolant should be drained before disassembly.

●Swallowing or inhaling the coolant can be harmful to the human body.Please thoroughly clean any exposed skin such as hands, face, etc. after each addition of coolant.Contact poison control center or hospital immediately if swallowed.If inhaled, please go to a ventilated environment immediately.In case of accidental splash into eyes, please immediately flush eyes with plenty of running water and seek medical treatment in time.Be sure to stay away from children and pets.

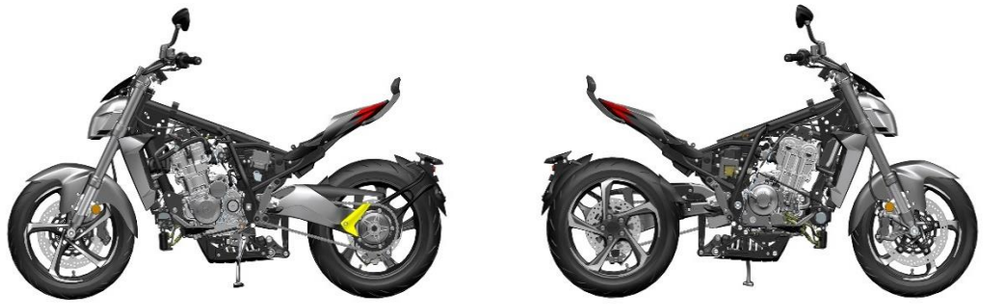

Fig.2 FRAME&ENGINE		FRAME&ENGINE 1	CHK ADJ	
NO.	PART NO.	PART NAME	QTY	CAUTION
1	1250104-006097	GB16674M6×12 (chromed/HH)	3	
2	1274100-155095	Flanged bushing ϕ6.2×ϕ8.4×3.5 + ϕ14×1.5(5 pcs/after	4	
3	1241200-124021	flanging bushing buffer rubber (ϕ8.5×ϕ14×1)(5 pcs/af	4	
4	4134300-024000	ZT350-VX rear shock absorber link baffle assembly	1	
5	1251112-001093	M6×16 Hexagon flange bolts (color Zinc)	1	
6	1251100-061093	M6×22 Hex flang bolt thread level 8.8 (color Zinc)	1	

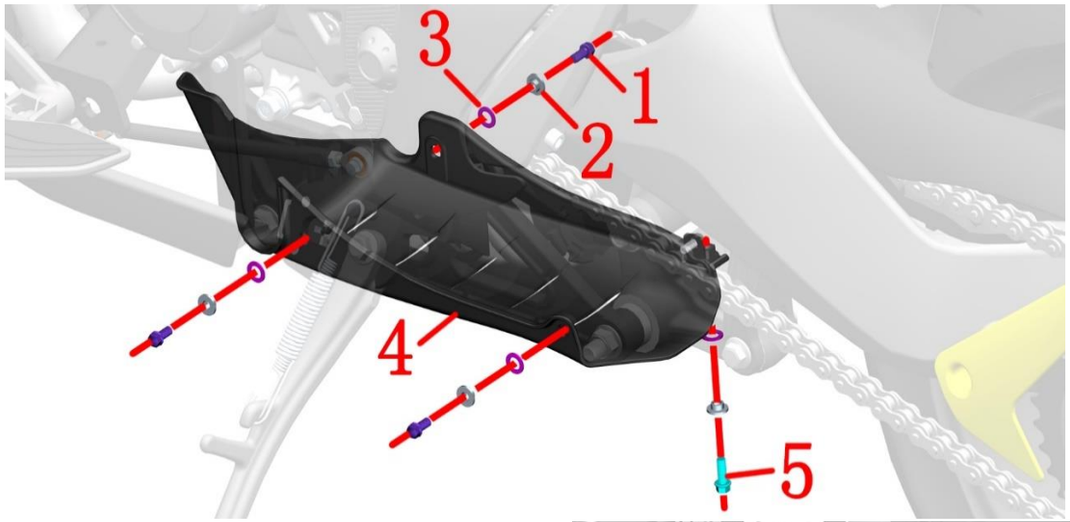

PROCEDURE:

●Preparation steps

The seat cushion, fuel tank, side cover, lower fairling, muffler, bumper, etc. need to be removed first.

●Link baffle assembly

After holding the baffle plate, use an 8# sleeve to remove 3 bolts (1) and 1 bolt (5) respectively, and remove the bushing (2) and buffer rubber (3). Remove the connecting rod stopper (4).

●Disassemble the main pump U-joint of the disc brake

Straighten the cotter pin ① and remove it, remove the spacer ② and then remove the pin ③.

●Shift lever spline rocker arm

Use an 8# socket or a torx wrench to remove the bolt (6), and pull out the rocker arm (6).

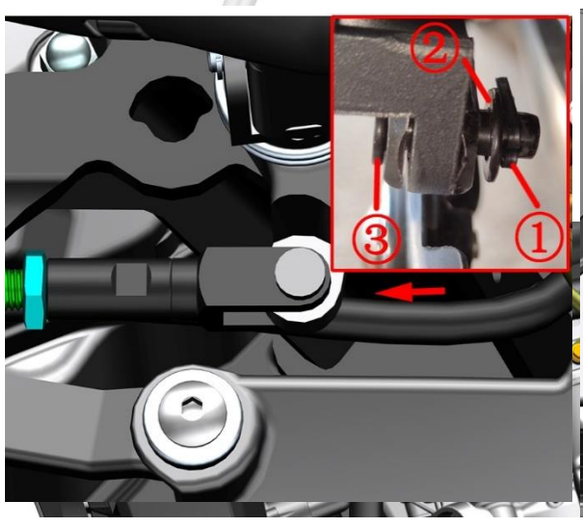

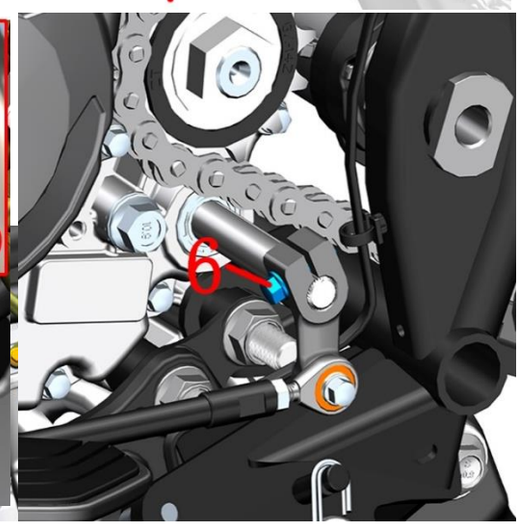

CAUTION：

●Use the appropriate tools to support the vehicle to prevent accidents caused by the dumping of the vehicle during the disassembly process; single operation is strictly prohibited.

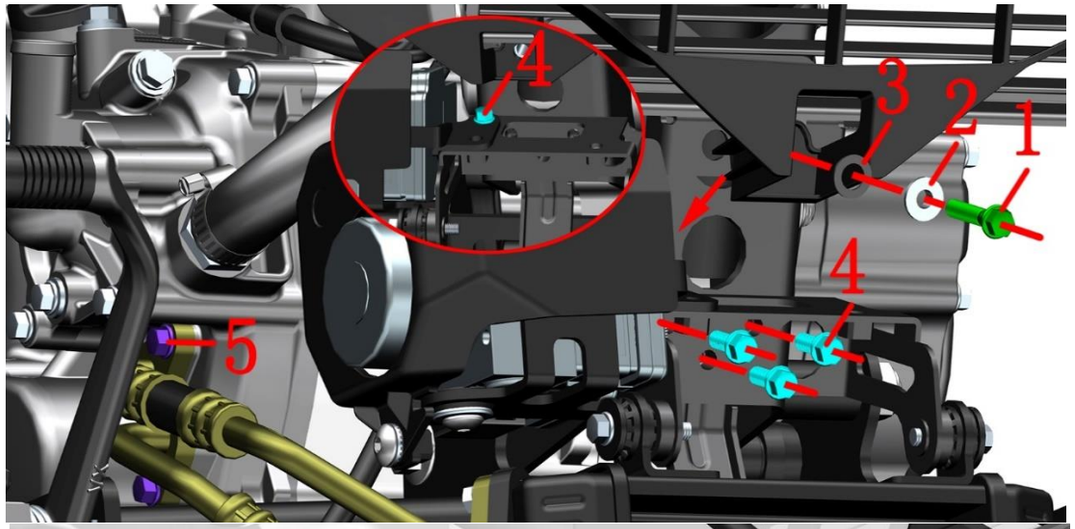

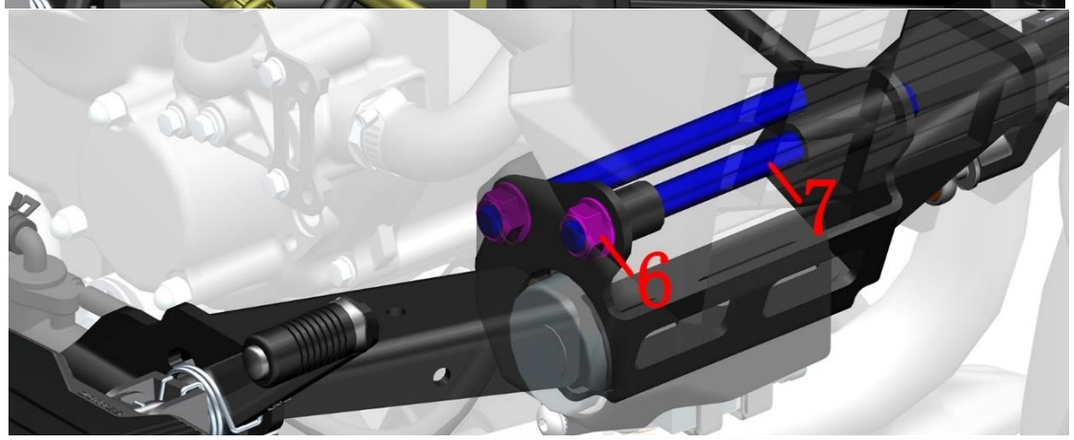

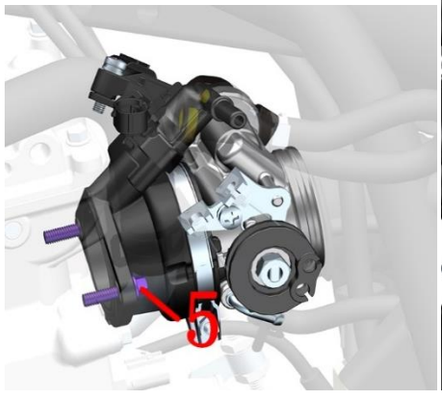

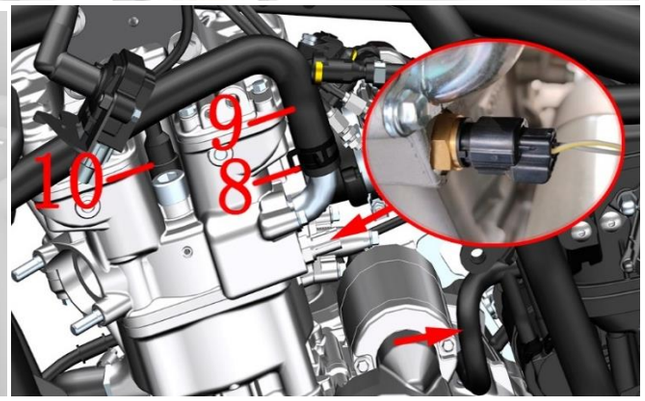

Fig.3 FRAME&ENGINE		FRAME&ENGINE 2	CHK ADJ	
NO.	PART NO.	PART NAME	QTY	CAUTION
1	1251112-002093	M6×30 Hexagon flange bolts (color Zinc)	1	
2	1274100-155095	Flanged bushing ϕ6.2×ϕ8.4×3.5 + ϕ14×1.5(5 pcs/after	1	
3	1241200-124021	flanging bushing buffer rubber (ϕ8.5×ϕ14×1)(5 pcs/af	1	
4	1251112-001093	M6×16 Hexagon flange bolts (color Zinc)	4	
5	1251100-061093	M6×22 Hex flang bolt thread level 8.8 (color Zinc)	4	
6	1250305-055091	GB6187.1 M12×1.25(White Zinc)(5 pcs/after-sale)	2	
7	1251112-020000	GB5187 non-standard bolt M12×1.25×153(10.9 garde/dacromet)	2	
8	1274200-091000	ZT310 water pipe clamp(ϕ27)	1	
9	1244200-071000	ZT310-V engine outlet pipe	1	
10	1050958-007000	ZT350 EFI high voltage line	1	

PROCEDURE:

●Oil cooler

It is recommended to cover the front pedal support with waterproof and oil-resistant plastic cloth, and then remove the two bolts(5) on the right side with 8# sleeve and pull out the two oil pipes.

Remove the three bolts(4) above the oil cooler with 8# sleeves. Pull out the oil cooler assembly for a certain distance and remove the bolt(4) fixing the hydraulic control unit support.

●Radiator middle trim cover

Remove the bolt(1)) at the bottom of the middle trim cover with 8# sleeve, and remove the gasket(2) and buffer glue(3).

●Front pedal support assembly

Fix the head of bolt(7) with 14# sleeve on the left side and remove nut(5) with 17# sleeve on the right side. After grasping the front pedal support assembly, remove the bolt(7) and remove the pedal support assembly.

●Left side of engine

It is recommended to use a 8# ring wrench with a 72 tooth ratchet wheel corner to remove the bolts(5) of the intake manifold. Or loosen the clamp at the air outlet of the air filter and the clamp between the throttle valve body and the intake manifold; And unplug the high-pressure oil pipe, fuel injector and external pressure sensor.

Move the hoop(8) upward by about 30mm with hoop pliers, and then pull out the engine end of the water outlet pipe(9). Pull the high-voltage wire(10) up and out. Unplug the plugs of exhaust pipe and cylinder head water temperature sensor.

CAUTION：

●The waste oil needs to be collected and returned to qualified institutions. It is forbidden to dump and pollute the environment and the source of water.

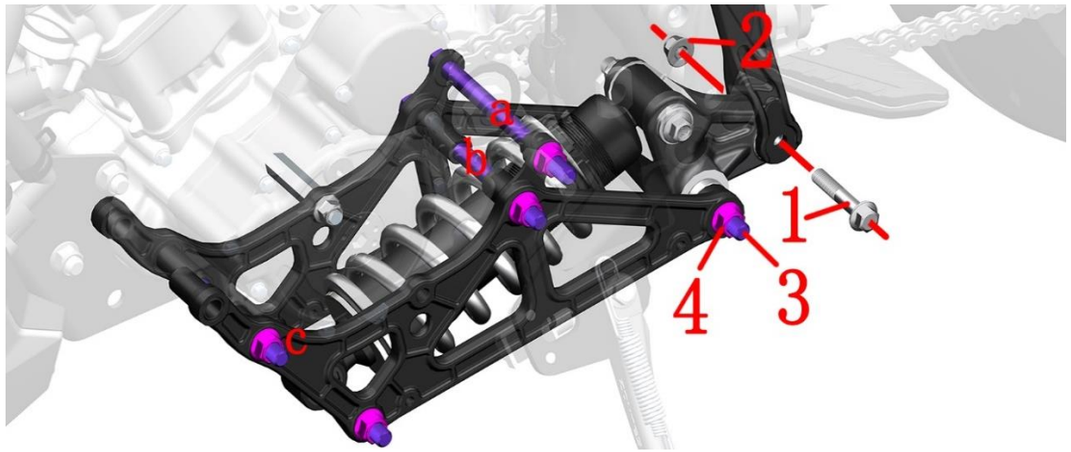

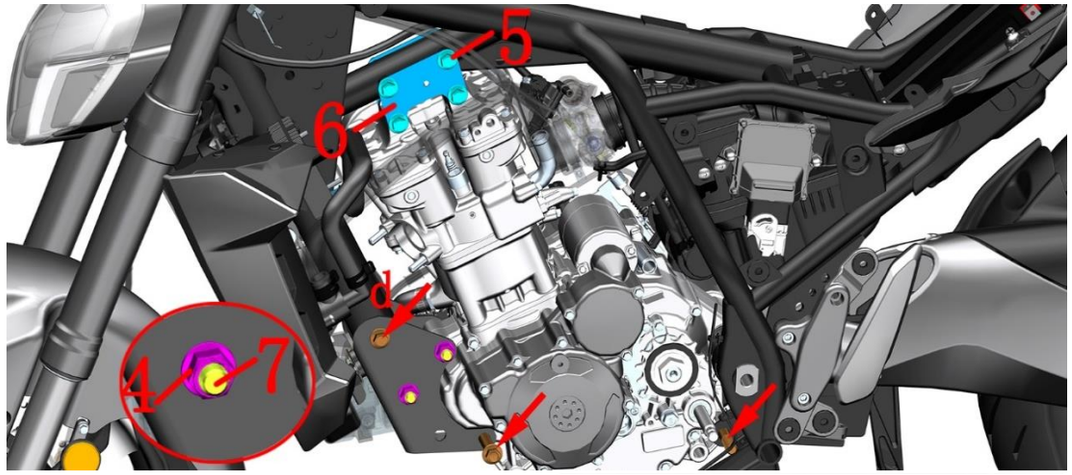

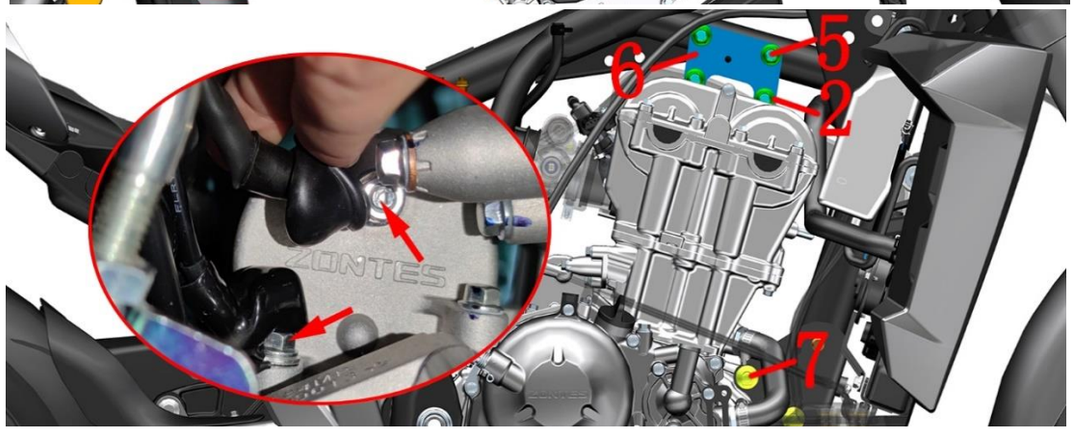

Fig.4 FRAME&ENGINE		FRAME&ENGINE 3	CHK ADJ	
NO.	PART NO.	PART NAME	QTY	CAUTION
1	1251100-291000	Non-standard bolt M10×1.5×55(Dacromet)	1	
2	1251300-057093	Non-standard nut M10×1.5(Dacromet)	5	65±5N.m
3	1251112-020000	GB5187 non-standard bolt M12×1.25×153	5	
4	1250305-055091	GB6187.1 M12×1.25(White Zinc)(5 pcs/after-sale)	7	
5	1251100-132003	Non-standard bolt M10×1.5×80 (Dacromet)	4	
6	1274300-082000	ZT350-R engine hanger	2	
7	1251112-019000	GB5187 non-standard bolt M12×1.25×85	2	

PROCEDURE:

●Rear shock absorber reinforcement plate assembly

Make sure that the vehicle is supported firmly, and the rear flat fork assembly of the rear wheel cannot be supported because the rear shock absorber assembly needs to be removed later. Use a 14# sleeve to fix the head of the bolt (3) on the right side, and use a 17# sleeve to remove the nuts (4) at three places a, b, and c on the left side. Do not remove the bolt (3) yet. Note that the other 2 places only need to loosen the nut (4) for about 5 turns, which is convenient for subsequent removal of the rear shock absorber assembly.

Use a 14# sleeve to fix the head of the bolt (1) on the left and left side, and then remove the nut (2) with a 14# sleeve to ensure that the whole vehicle is stable, and then one person gently shakes the rear wheel rear flat fork assembly up and down, and one person pulls out the bolt (1).

After holding the rear shock absorber assembly, pull out the bolts (3) at a, b, and c, and then remove the rear shock absorber assembly.

Insert the bolts at the 3 places indicated by the arrows in Figure 2 back.

●Hanging piece

Use a 14# sleeve on the left to fix the heads of the two bolts (5) above the hanger, and remove the nut 2 on the right 14# sleeve.

Use a 14# Torx wrench on the right to fix the heads of the two nuts (2) above the hanging piece, and remove the bolts (5) on the left 14# socket.

●Bracket

Use a 14# sleeve on the left to separate the heads of the 2 bolts (7) at the bracket, and remove the nut (4) on the right 17# sleeve. Do not remove bolt (7) and bracket assembly yet.

●Starter motor

Open the protective cap indicated by the arrow in Figure 3 on the right side, remove the upper nut with a 10# sleeve, and then pull out the cable, and screw the nut back to the motor to avoid loss. Or remove the nut on the red positive end of the starter relay on the upper right side of the air filter, and then remove the positive wire of the motor. This method is difficult and requires re-routing the positive wire, so it is not recommended.

After removing the protective cap at the bottom, use an 8# Torx wrench to remove the bolt, then remove the negative wire and the ground wire of the main cable, and screw the bolt back.

●Clutch line

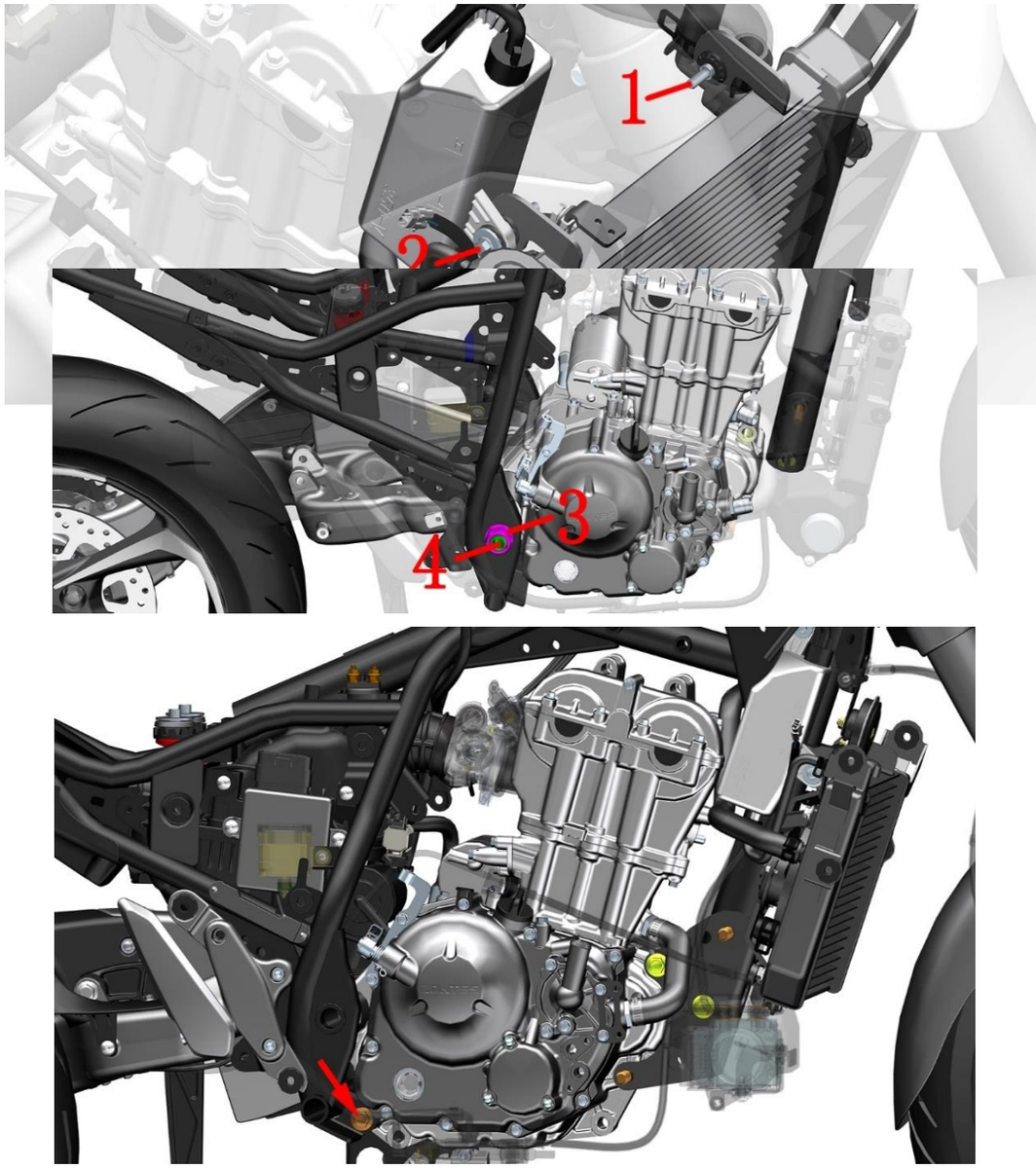

Fig.5 FRAME&ENGINE		FRAME&ENGINE 4	CHK ADJ	
NO.	PART NO.	PART NAME	QTY	CAUTION
1	1251112-002093	M6×30 Hexagon flange bolts (color Zinc)	1	
2	1251112-003093	M6×45 Hex flange surface 9.8 bolt (color Zinc)	1	
3	1251300-067000	ZT250-R rear wheel hollow shaft nut	1	
4	1094200-009000	ZT310-V rear wheel hollow shaft Φ20×345	1	

PROCEDURE:

●Water tank component

Loosen the bolts (1) on the upper direction of the main water tank with an 8# sleeve on the left side, and loosen the bolts (2) on the right side. Grasp the bottom of the water tank assembly and turn it upward at a certain angle to facilitate subsequent unloading of the engine.

●Rear fork assembly

Loosen the chain first and remove it from the small sprocket according to the method of adjusting the chain. Tie the chain to the rear fork.

After ensuring that the vehicle is supported firmly, be careful not to support the rear flat fork assembly on the rear wheel. Use a 24# open-end wrench to fix the bolt head on the left side, and use a 30# sleeve to remove the nut (4) on the right side. One person supports the engine, one person stabilizes the rear flat fork assembly of the rear wheel, and the other uses a rubber hammer to knock the shaft to the left to leave the engine box. There is no need to remove it to prevent the rear flat fork assembly from falling off.

●Disassemble the engine

Check whether the cables, pipes, etc. connected to the engine have been removed.

Remove parts such as brake hoses, cables, etc. that may block removal of the engine.

After supporting the engine cylinder head, remove the 4 bolts at the bracket and remove the bracket assembly.

Hold the engine, remove the engine rear mounting bolt indicated by the arrow, and remove the engine.pay attention to safety during move the engine. Place the engine on a flat ground.

CAUTION：

●Use the appropriate tools to support the vehicle to prevent accidents caused by the dumping of the vehicle during the disassembly process; single operation is strictly prohibited.

●All standard parts must meet the standard torque value during reassembly, and re-add the oil according to the instructions.

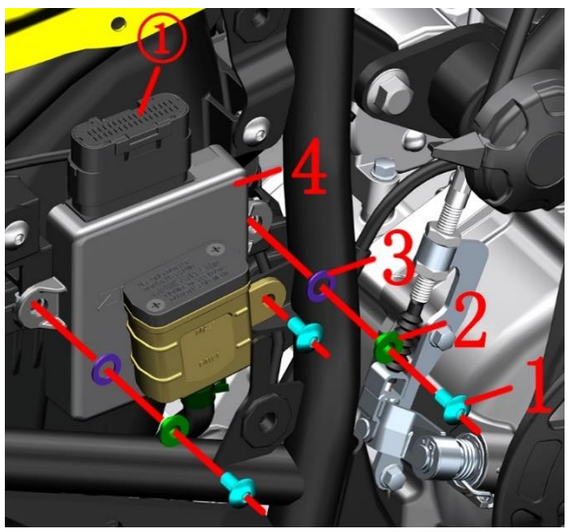

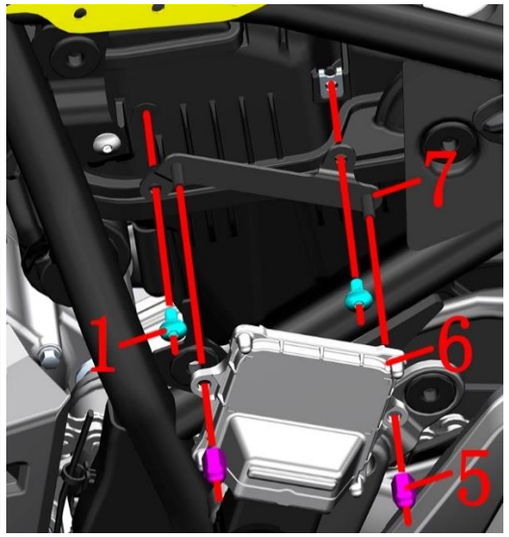

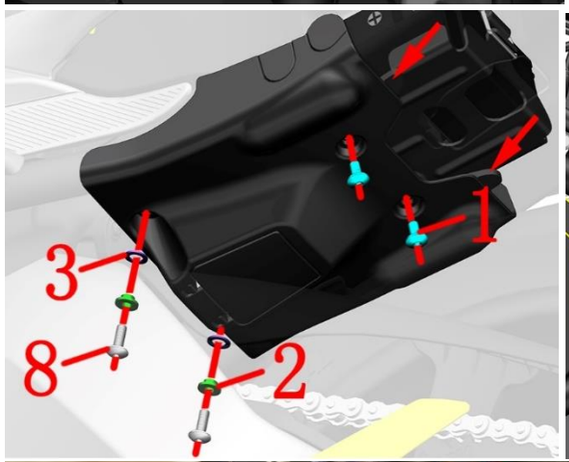

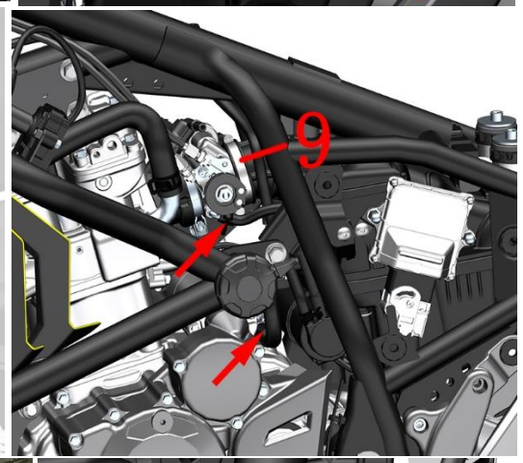

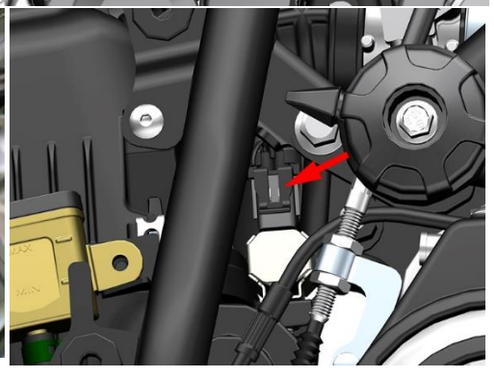

Fig.1 INTAKE SYSTEM COMPONENT		Air filter components 1	CHK ADJ	
NO.	PART NO.	PART NAME	QTY	CAUTION
1	1251100-101000	Non-standard bolt M6×12 (304 stainless steel)	7	
2	1274100-155095	Flanged bushing ϕ6.2×ϕ8.4×3.5 + ϕ14×1.5(5 pcs/after	4	
3	1241200-124021	flanging bushing buffer rubber (ϕ8.5×ϕ14×1)(5 pcs/af	4	
4	1184300-024100	2.5 Generation PKE Assembly(including induction key)	1	
5	1251300-207000	Non-standard cover type 9 degree nut M6×13 (enviro	2	
6	1050958-014000	MSE6.0 controller - ZT184MP (matching split sensor/Euro V)	1	
7	1274200-268000	ZT310-VX Bosch ECU bracket	1	
8	1251100-102000	Non-standard bolt M6×16 (304 stainless steel)	2	
9	1051371-002000	Φ59×9 pipe clamp assembly	1	

PROCEDURE:

●PKE controller and ECU

For the PKE disassembly method, please refer to the "PKE Assembly" section of "Frame Assembly" in this manual. For details on how to disassemble the ECU, see the section "Electrical Components-1" in the "Frame Assembly" of this manual.

●Electrical device box bottom cover

After holding the bottom cover assembly of the electrical device box, remove 2 bolts (8) with a 4# hexagon socket, remove the bushing 2 and buffer glue 3; remove the 2 bolts (1) and then remove them. Note that there is a buckle at the arrow indication, you need to pull down the end near the air filter and move forward about 15mm at the same time.

●Air filter assembly

Unplug the desorption tube and exhaust tube on the left side. After loosening the clamp (9), pull out the air outlet pipe from the throttle valve body.

Refer to the "Electrical Device Assembly-1" section of this manual "Frame Assembly" on the upper right side to remove the starter relay and bracket.

Unplug the temperature sensor indicated by the arrow in Figure 5.

Unplug the canister solenoid valve.

CAUTION:

●Remove the side cover, seat cushion,fuel tank, etc. in advance.

●Do not pull the cable hard when unplug the connector.

●Always keep the disc brake oil cup cover facing up.

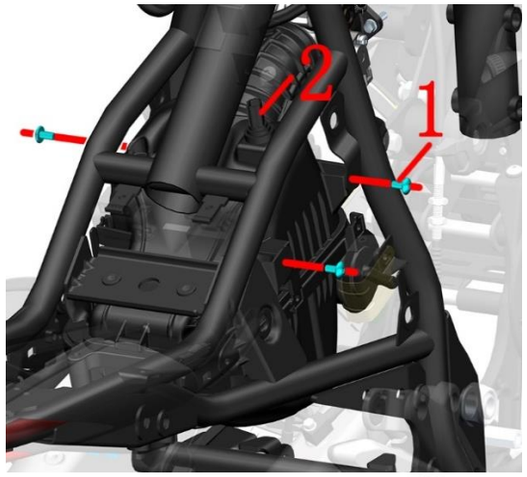

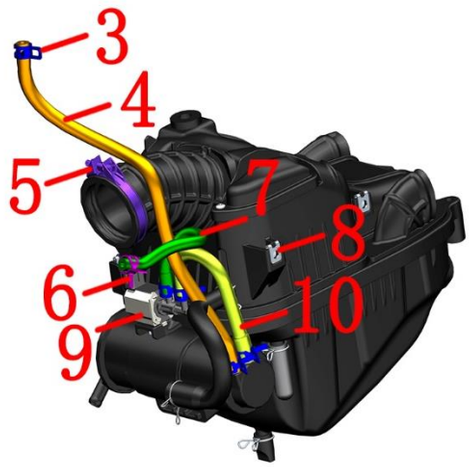

plug, which should be 35 ± 2 Ω, otherwise the solenoid valve fault can be judged.

●Check whether the temperature sensor is damaged

Remove the temperature sensor from the air filter and place it in the ambient temperature (20 ～ 30 ℃), and use a multimeter to check whether the resistance of the two pins is between 2726 ～ 1770 Ω.

CAUTION:

●Remove the side cover,seat cushion,fuel tank,etc. in advance.

●Regularly check whether the filter element of the carbon tank and air filter is not ventilated, otherwise it may cause the oil supply to affect the driving experience.

●It should be no crimp, entanglement and other phenomena.

Fig.2 INTAKE SYSTEM COMPONENT		Air filter components 2	CHK ADJ	
NO.	PART NO.	PART NAME	QTY	CAUTION
1	1251100-101000	Non-standard bolt M6×12 (304 stainless steel)	3	
2	1050961-004000	Air filter intake air temperature sensor	1	
3	1276001-057000	ZT310 water pipe clamp(ϕ10.5)(after-sale)	5	
4	1244200-095000	ZT310-V canister tube adsorption (Φ5 x Φ 11)	1	
5	1051371-002000	Φ59×9 pipe clamp assembly	1	
6	1276001-056000	ZT310 water pipe clamp(ϕ9)(after-sale)	1	
7	1244200-097000	ZT310-V canister solenoid valve vent manifold (Φ4×Φ10/Φ5×Φ11)	1	
8	1251300-063093	Plywood M6×11×15(color Zinc)	7	
9	1050954-009000	YH canister solenoid valve	1	
10	1244200-096000	ZT310-V canister electromagnetic valve inlet manifold (Φ5×Φ11/Φ7×Φ13)	1	
11	1250303-040093	GB6177.1M6 (environmental color)(5 pcs/after-sale)	1	
12	1224100-012000	ZT250-S carbon tank	1	
13	1224300-005000	ZT350-V air filter	1	

PROCEDURE:

●Air filter assembly

Remove the air filter intake air temperature sensor(2) from the air filter. If the sealant falls off, it needs to be plugged back to its original position. Remove the clamp (5).

Remove the 3 bolts (1) from the 4# inner hexagon, respectively, and remove the air filter assembly from the car. Need to constantly adjust the angle to take out.

Remove 7 pieces of clamp nuts (8).

The oil accumulation pipe ① and the water accumulation pipe ② should be checked and cleaned regularly.

●Carbon Tank Assembly

Use hoop pliers to remove the carbon canister and the 4 pieces of clamps (3) on the solenoid valve end of the carbon canister, and then pull out the adsorption pipe (4), the air outlet pipe (7) and the intake pipe (10). Remove all hoops .From October 20,2022,the air outlet pipe (7) and the intake pipe (10) are connected to the carbon canister solenoid valve end to swap positions.

Remove the carbon canister (12).

●Carbon tank electromangnetic valve

Remove the nut (9) with the 10# sleeve; remove the solenoid valve(7).

●Check the carbon canister solenoid valve:

In case of poor engine performance; Poor idle speed; If the air-fuel ratio is incorrect, check the carbon canister solenoid valve.

Use a multimeter to measure the resistance between the two inserts of the carbon canister solenoid valve

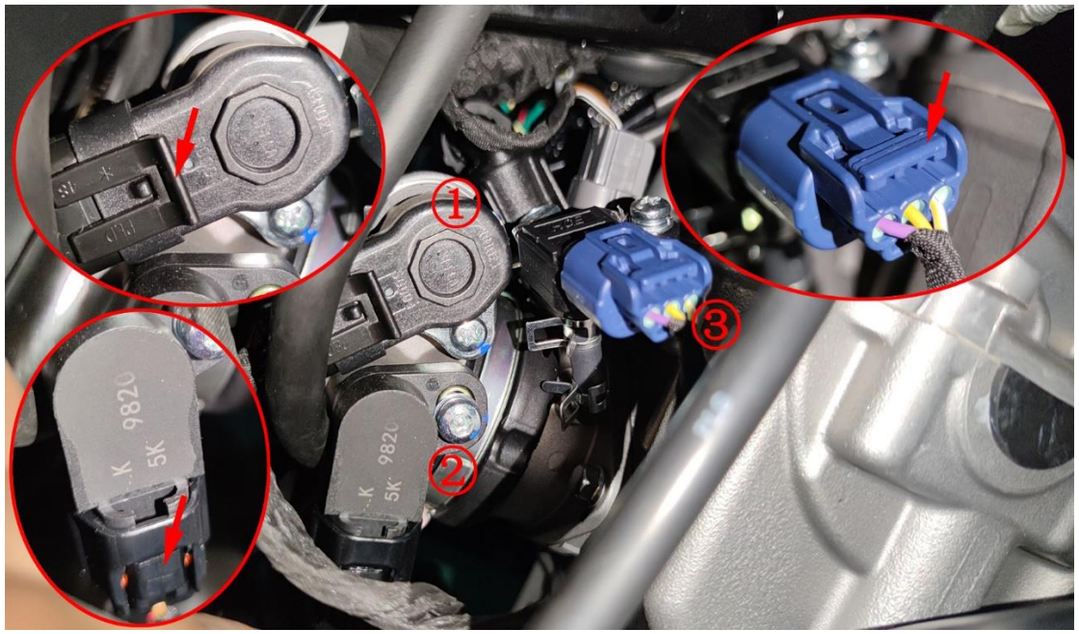

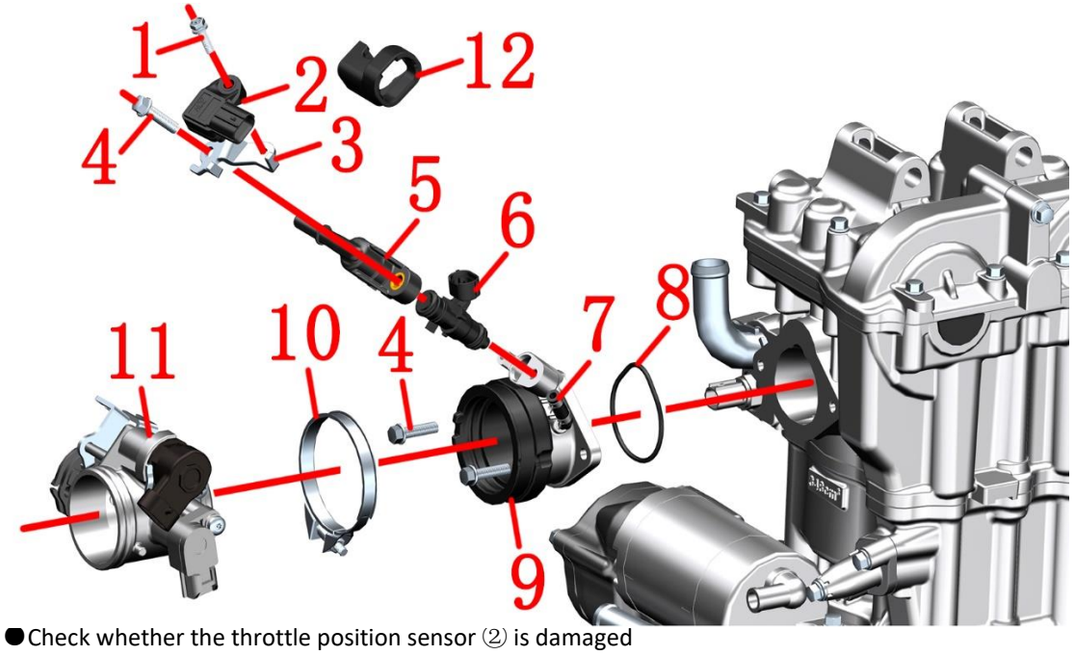

Fig.3 INTAKE SYSTEM COMPONENT		Intake system component	CHK ADJ	
NO.	PART NO.	PART NAME	QTY	CAUTION
1	1250106-112000	GB9074.13 Hexagon cross groove spring,flat cushion combination bolt M5×20	1	
2	1050961-003000	External intake pressure sensor MAP01 (18590H7U300)	1	
3	1050958-009000	ZT350 fixed bracket of external intake pressure sensor	1	
4	1050970-002000	ZT1P72MN injector holder	2	
5	1050954-023000	EV14 injector G48	1	
6	1050958-008000	Air intake pressure sensor connection hose	1	ϕ3.5×ϕ7.5×L30
7	1051454-016000	45 × 2.5 fluorine rubber O-ring	1	
8	1050958-003000	ZT184MP intake manifold assembly	1	
9	1251100-061093	M6×22 Hex flang bolt thread level 8.8 (color Zinc)	2	
10	1051371-002000	Φ59×9 clamp components	1	
11	1050958-001000	ZT44 Throttle Body Assembly (position sensor)	1	
12	1050957-021000	Pressure sensor fixing rubber sleeve	1	

PROCEDURE:

●Throttle valve assembly

Pull out the stepper motor ① card and pull out the plug. Press the latch of the sensor ② and pull out the plug. Press the card of the pressure sensor ③ and unplug it.

Loosen the clamp on the intake manifold end of the hose (7) and pull it out.

Use a 8# sleeve to remove the bolt (4), remove the external intake air pressure sensor assembly, the holder (5), and remove the fuel injector (6).

After loosening the clamp (10), separate the throttle valve body assembly (11) and the intake manifold assembly (9), and remove the clamp (10).

Use an 8# Torx wrench to remove 2 bolts (4), and then take off the intake manifold (9) and O-ring (8).

Use a Phillips screwdriver to remove bolt(1),then remove the sensor(2) and the bracket(3),take off the pipe (7) from the sensor.Remove the rubber sleeve(18),added from approximately Oct.24,2023.

●Check whether the external intake pressure sensor is damaged

Loosen the connector and check whether the pin is skewed or broken. The vehicle is connected to the diagnostic instrument without ignition. Check the engine parameters to see whether the pressure parameters are consistent with the local atmospheric pressure.

●Check whether the fuel injector is damaged

Remove the manifold without loosening the plug of electrical parts. Press the ignition button to check whether the two beams of oil mist emitted by the fuel injector are uniform.

●Check whether the stepping motor① is damaged

After turning off the power, take out the stepping motor, do not loosen the cable plug, press the flameout switch at startup without ignition, check whether the motor plug can shrink back and forth, and finally turn off the flameout switch to check whether the plug returns to its original position.

●Check whether the throttle position sensor ② is damaged

Connect the diagnostic instrument to the whole vehicle, press the flameout switch (without ignition), turn the throttle handle from the initial position to fully open, and check whether the throttle position signal changes from 0 to 100.

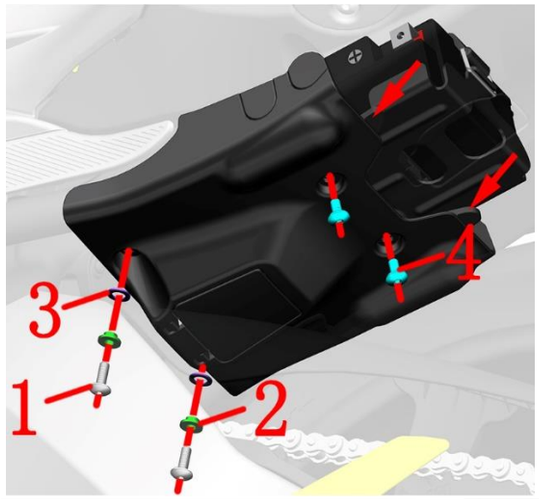

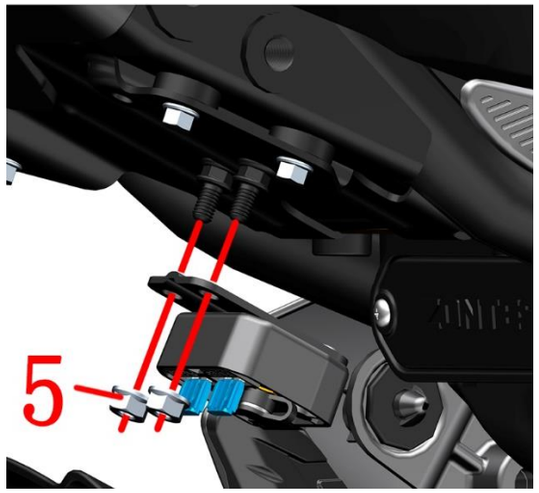

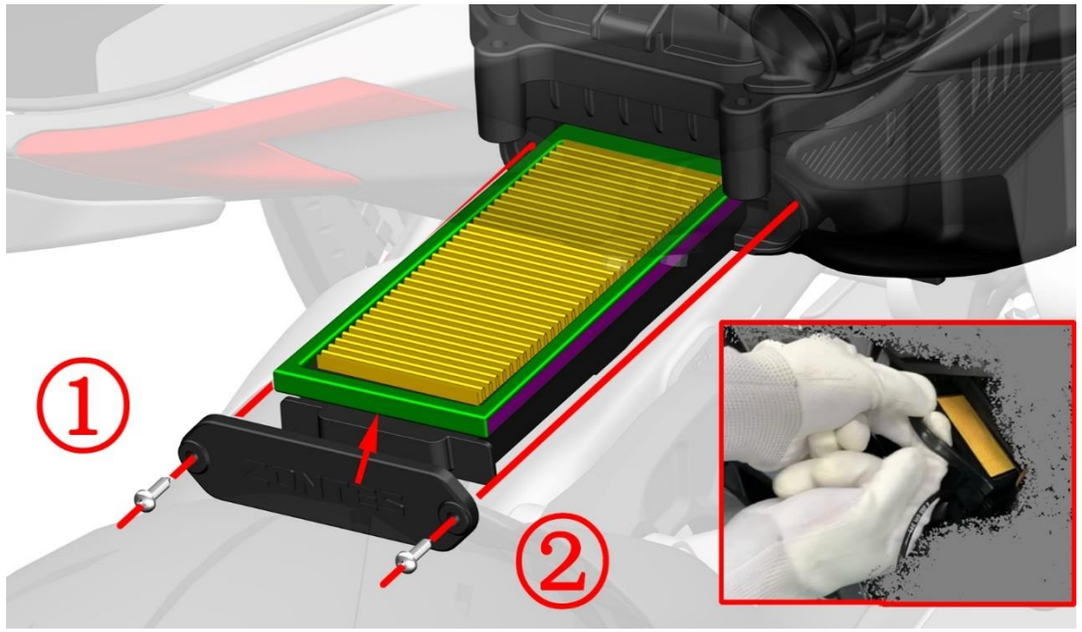

Fig.4 INDUCTION SYSTEM COMPONENT		Replace the air filter element	CHK ADJ	
NO.	PART NO.	PART NAME	QTY	CAUTION
1	1251100-101000	Non-standard bolt M6×12 (304 stainless steel)	2	
2	1274100-155095	Flanged bushing ϕ6.2×ϕ8.4×3.5 + ϕ14×1.5(5 pcs/after	2	
3	1241200-124021	flanging bushing buffer rubber (ϕ8.5×ϕ14×1)(5 pcs/af	2	
4	1251100-101000	Non-standard bolt M6×12 (304 stainless steel)	2	
5	1250303-040093	GB6177.1M6 (environmental color)(5 pcs/after-sale)	2	

PROCEDURE:

●Electrical device box bottom cover

After firmly grasping the bottom cover assembly of the electrical device box, use a 4# hexagon socket to remove 2 bolts(1), remove the bushing(2) and the buffer glue(3), and remove the 2 bolts(4) and then remove them. Note that there is a buckle at the arrow indication, you need to pull down the end near the air filter and move forward about 15mm at the same time.

Use a 10# sleeve to remove the nut (5), and move the charging port base assembly to the side.

●Air filter element

Use a Phillips screwdriver to remove 2pcs screws①,take off the cover②.

Use a flat-blade screwdriver to pry out the middle of the air filter element rubber strip, grab the rubber strip with your hands and pull it out to remove the filter element. Note that if the filter element card is tight, grab both sides of the strip and pull it out alternately. Do not use brute force to pull it out to prevent the strip from breaking.

Prepare a new filter element and sealing ring.

Install the sealing ring into the groove of the filter element and press tightly.

Apply an appropriate amount of oil or grease evenly on both sides of the strip.

Follow the disassembly steps to reassemble all parts.

CAUTION:

●The sealing ring must be assembled in place. Leakage or assembly may not cause dust to enter the engine. In severe cases, the internal parts of the engine may be damaged.

● Note that the torque should not be too large when locking the Phillips bolt to prevent damage to the parts.

●When flushing the vehicle, be careful not to allow water to enter the air filter. If a small amount enters, remove the oil pipe and release it. Make sure that there is no water inside the air filter to start the vehicle.

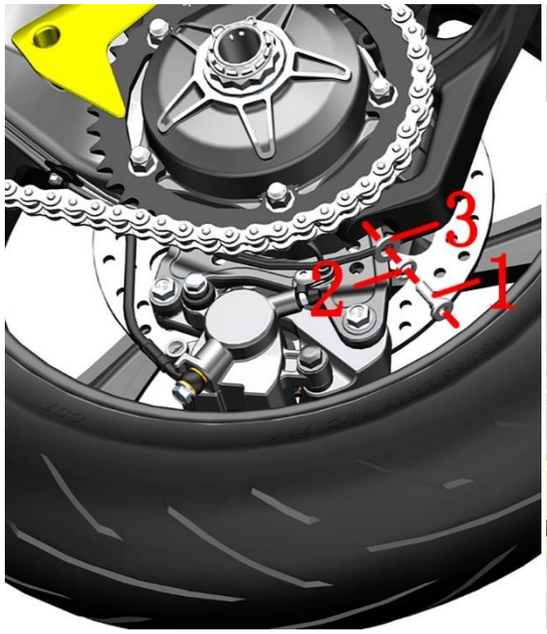

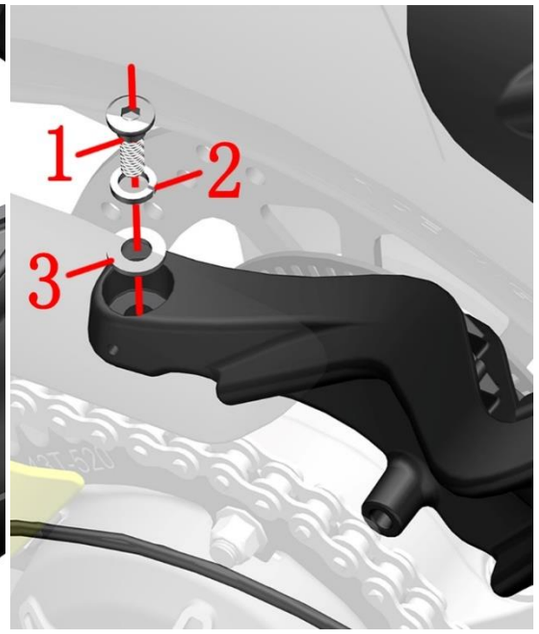

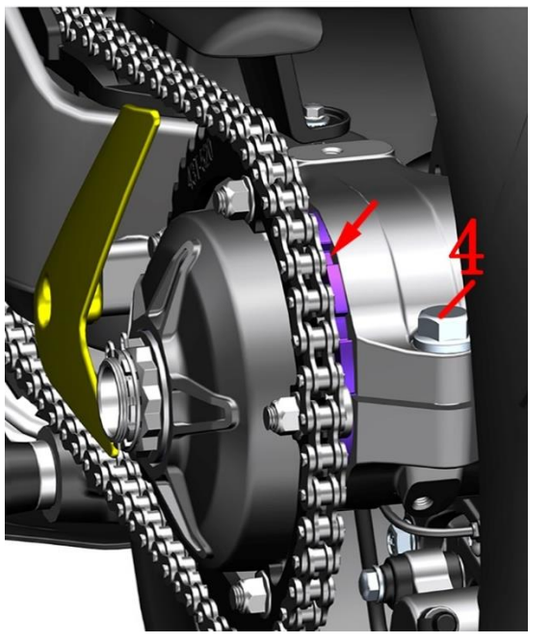

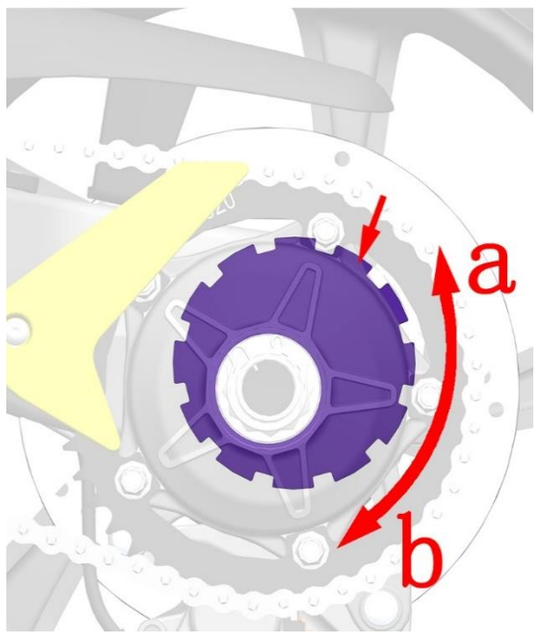

Fig.1 Rear wheel, swinging arm assembly		Adjustment chain	CHK ADJ	
NO.	PART NO.	PART NAME	QTY	CAUTION
1	1251100-117093	Non standard hex socket bolt M8×25	2	
2	1250501-004091	GB93ϕ10（white zinc）	2	
3	1250503-006091	GB97.1ϕ10（white zinc）	2	
4	1251100-204000	Non-standard Bolt M16×1.5×50（color zinc）	1	100N.m

PROCEDURE:

●Rear auxiliary mud plate assembly

Use a 6# inner hexagon socket remove the bolt (1) at the bottom of the rear sub-slab assembly and remove the spring washer (2) and flat washer (3).

After holding the rear sub-mud assembly in one hand, Using a 6# inner hexagon socket remove the upper bolt (1) and remove the spring pad (2) and flat pad (3). Place the rear sub-mud assembly properly, taking care not to pull the cable.

●Sprocket assembly

Use a 21# sleeve to loosen the bolt (4).

Use a special hook wrench to turn the eccentric chain adjuster at the arrow indication. The counterclockwise direction is to tighten the chain, and the clockwise b direction is loose.

The chain sag is 18~25mm. If it is too large, it will cause the chain to be accidental or damage the engine. If it is too small, it will aggravate the wear of the chain and sprocket.

After adjusting the chain, restore it and pay attention to the torque of the bolt (4).

CAUTION:

●The upper bolt can only be removed after holding the rear mud plate assembly; Do not pull the cable

●The torque of the bolt (4) is 100N.m.

●The chain must be checked regularly for excessive wear; the chain should be cleaned and properly lubricated regularly.

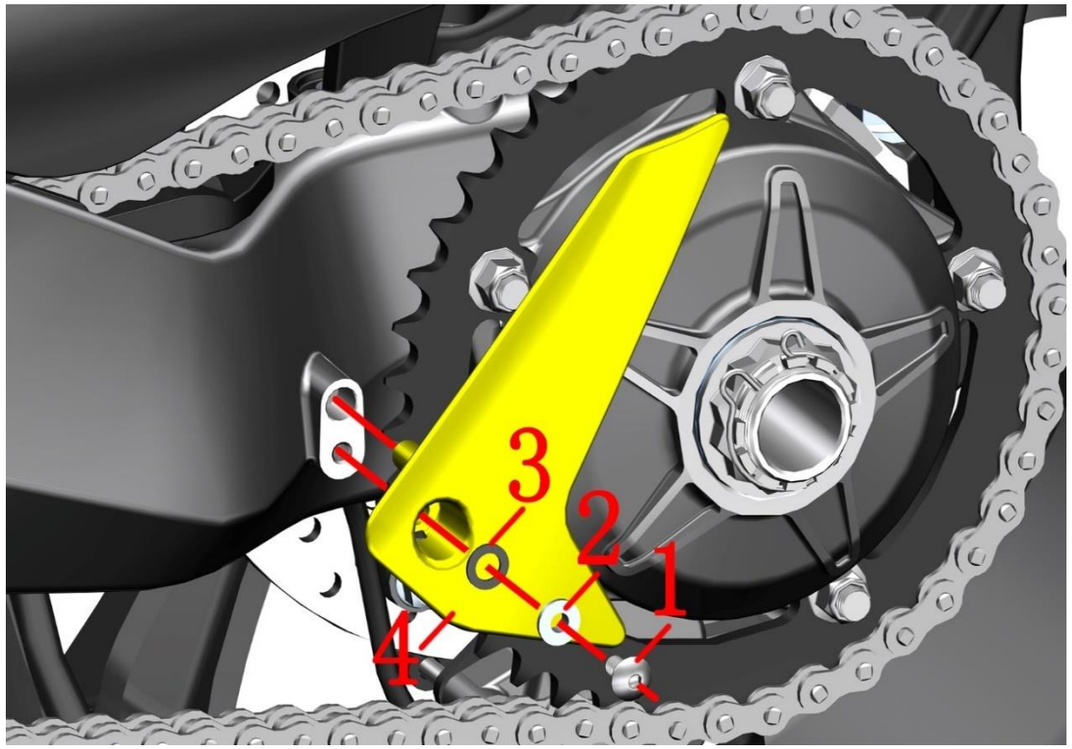

Fig.2 Rear wheel, swinging arm assembly		Sprocket baffle	CHK ADJ	
NO.	PART NO.	PART NAME	QTY	CAUTION
1	1251100-101000	Non-standard Bolt M6×12 （304 stainless steel）	1	
2	1274100-155095	Flanged bushing ϕ6.2×ϕ8.4×3.5 + ϕ14×1.5(5 pcs/after	1	
3	1241200-124021	flanging bushing buffer rubber （ϕ8.5×ϕ14×1)(5 pcs/af	1	
4		ZT310-R1 sprocket baffle	1	

PROCEDURE:

●Sprocket baffle

Using 4# inner hexagon socket remove bolt(1)， remove the flange bushing (2), cushion rubber(3); finally remove the sprocket baffle(4).

CAUTION:

●When reassembling, pay attention to the limit boss on the sprocket baffle to be inserted into the limit hole of the rear fork.

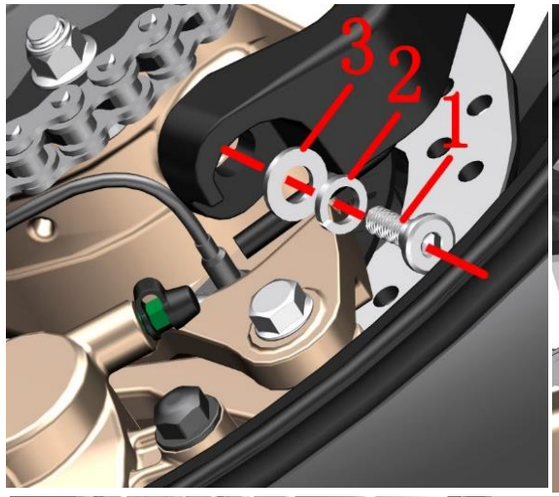

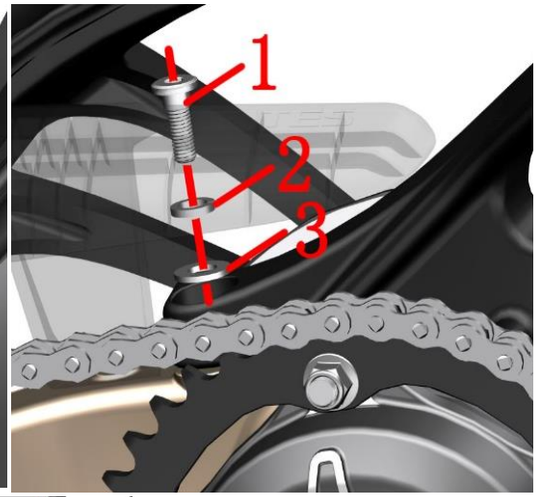

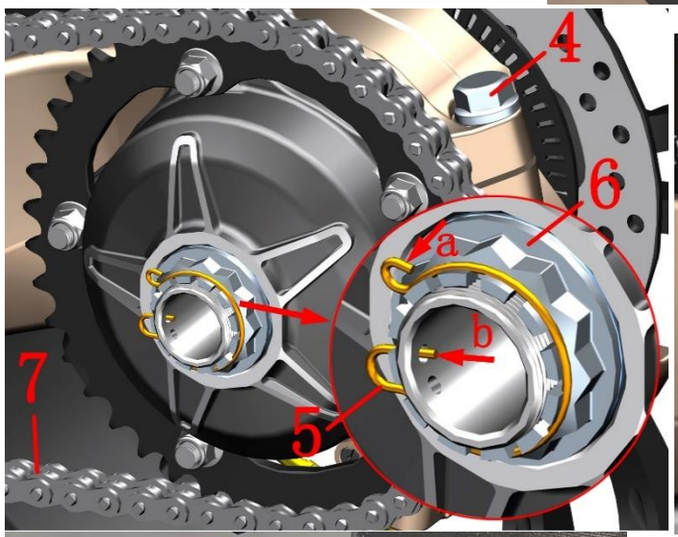

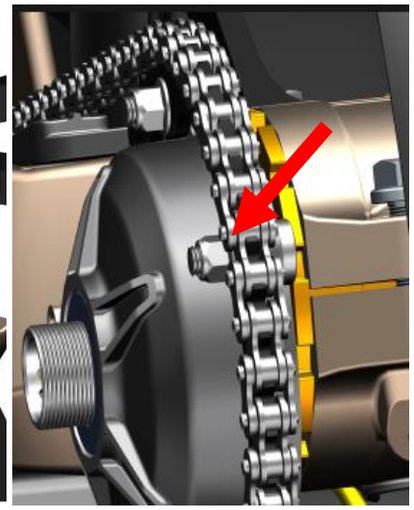

Fig.3 Rear wheel, swinging arm assembly		Sprocket assembly 1	CHK ADJ	
NO.	PART NO.	PART NAME	QTY	CAUTION
1	1251100-117093	Non-standard inner hex bolt M8×25 (color Zinc)	2	
2	1250501-004091	GB93ϕ10(white Zinc)	2	
3	1250503-006091	GB97.1 ϕ10(white Zinc)	2	
4	1251100-204000	Non-standard bolt M16×1.5×50 (environmental color)	1	100N.m
5	1094100-062000	M35 nut locking spring	1	
6	1251300-070000	Non-standard nut M35×1.5 (environmental color)	1	200N.m
7	1080200-055000	114 section chain (520 oil seal chain/open type)	1	

PROCEDURE:

●Rear auxiliary mud plate assembly

Using 6# inner hexagon socket Remove the bolt (1) at the bottom of the rear sub-slab assembly and remove the spring washer(2) and flat washer(3).

After holding the rear sub-mud assembly in one hand, Using a 6# inner hexagon socket remove the upper bolt(1)and remove the spring washer(2)and flat washer(3). Place the rear sub-mud assembly properly, taking care not to pull the cable.

●Sprocket assembly

Use the No. 21 sleeve to loosen the bolt(4) without removing it.

Pull the locking spring (5)a radially out of the groove on the nut(6)and pull it out in the axial direction; remove the locking spring(5) in the direction indicated by the arrow b.

One person stepped on the brake pedal to prevent the rear wheel from rotating. One person removed the nut(6)with a 42mm 12-angle sleeve + 280N.m torque wrench.

Use a special hook wrench to turn the eccentric chain adjuster at the arrow direction clockwise to remove the chain from the sprocket.

Remove the sprocket assembly.

●Chain

Rotate the chain on the left to find the clasp. Grind off the angle grinder to remove the chain(7).

Punch links(8) can be purchased on the official website or other online shopping platforms. A dedicated chain installation tool is required and the tool must be purchased by yourself. The card for the transition link must be on the outside.

CAUTION:

●The upper bolt sits only after the rear mud plate assembly needs to be dragged down; you can't pull the cable.

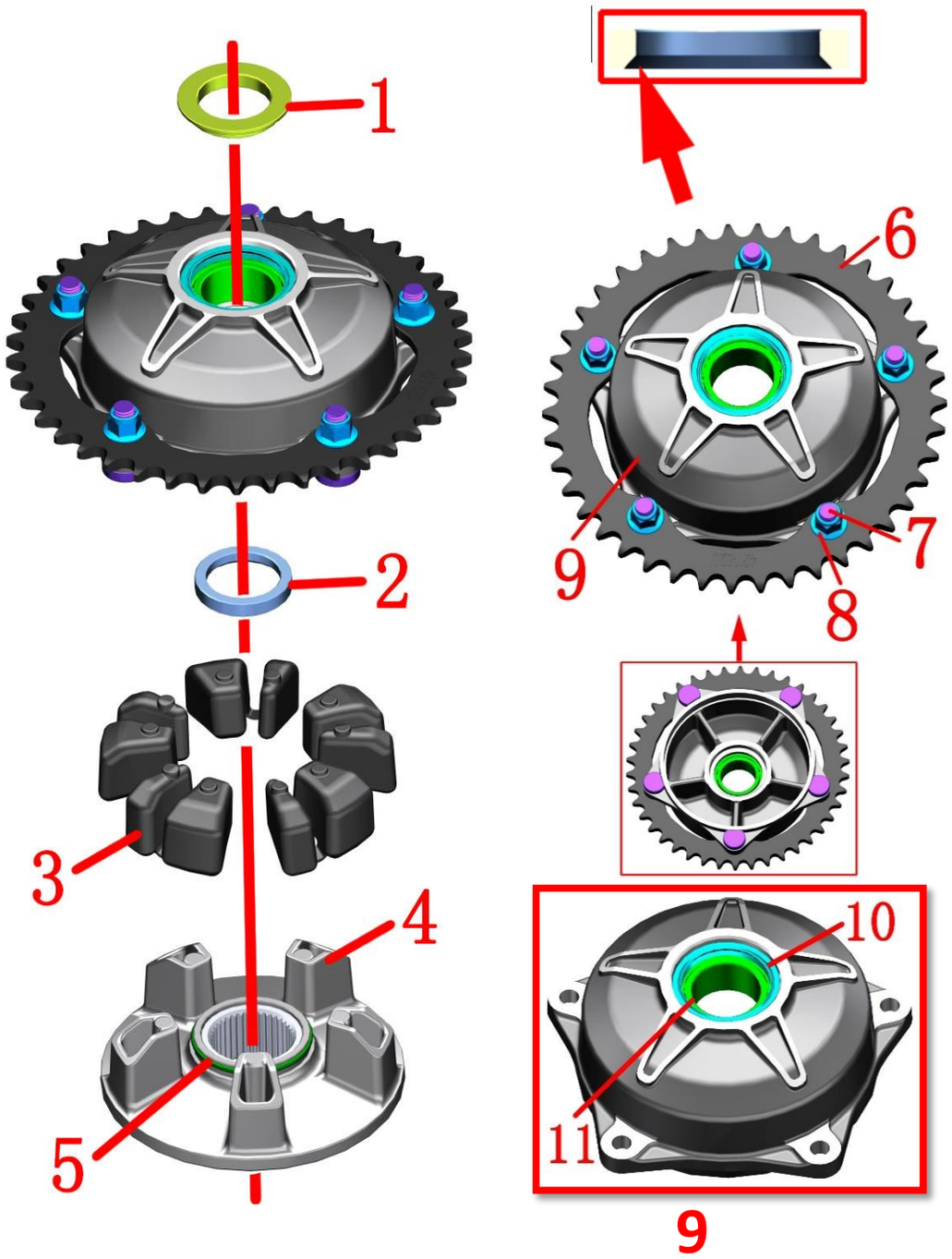

Fig.4 Rear wheel, swinging arm component		Sprocket assembly 2	CHK ADJ	
NO.	PART NO.	PART NAME	QTY	REMARKS
1	1274100-108000	Bushing Φ45×Φ35×5.5+Φ54×Φ35×2	1	
2	1274100-105000	Bushing Φ46×Φ35×7.3	1	
3	1244100-087000	ZT310-R1 single rocker sprocket buffer rubber	5	
4	1094200-013000	ZT310 single rocker sprocket seat inner shell	1	
5	1244200-088000	O-ring (Φ52.4×2.6)	1	
6	1080100-112000	ZT250-T1 520-43T sprocket	1	
7	1251100-190000	Non-standard bolt M10×1.5×30(environmental color)	5	
8	1251300-057093	Non-standard nut M10×1.5(Dacromet)	5	65N.m
9	4024200-086051	ZT310 dark gray single side swing arm sprocket housing assembly (including bearing/oil seal)	1	
10	1244200-045000	ZT310 single rocker arm Φ45×Φ55×5 oil seal	1	after-sale
11	1250601-095000	DA355520-2RS angular contact bearing	1	

PROCEDURE:

●Sprocket assembly

Remove the bushing(1) to separate the inside and outside of the sprocket seat.

Remove the bushing(2). When reassembling, pay attention to the bushing(2). The larger chamfered end faces the inner shell of the sprocket seat.

Remove 5 pieces of sprocket cushion rubber (3) from the outer casing assembly(9).

Remove the O-ring(5) from the inner casing (4).

The outer casing assembly(9)already contains an oil seal(10)and a bearing(11)which are attached to the outer casing for interference, and it is not recommended to disassemble the assembly if necessary.

●Sprocket

Using 14# sleeve remove the 5 nuts(8), remove the 5 bolts(7), and remove the sprocket(6). When reassembling, pay attention to the sprocket with the word one facing outward.

CAUTION:

●The notch position of the bolt (7) is facing inward.

●The sprocket seat housing assembly(9) already contains an oil seal and bearings. The distance from the upper end surface of the bearing to the upper end surface of the outer casing is 7.9 to 8.0 mm.

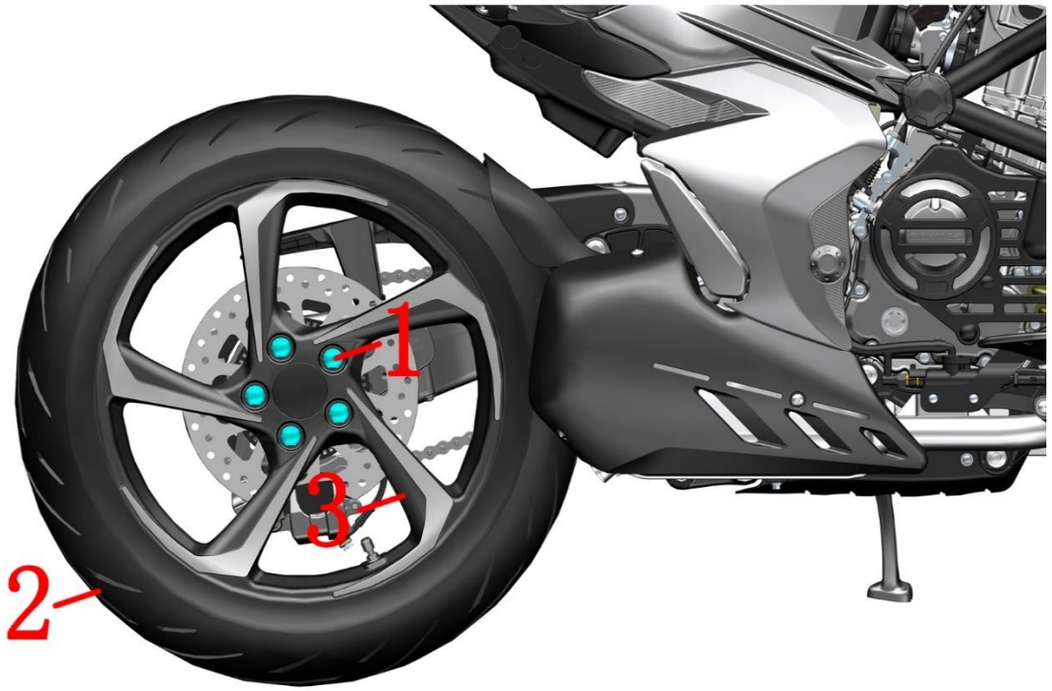

Fig.5 Rear wheel, swinging arm component		Rear wheel component	CHK ADJ	
NO.	PART NO.	PART NAME	QTY	REMARKS
1	1251300-071000	Non-standard nut M12×1.5 (chrome plated)	5	110N.m
2	1230100-565200	180/55ZR17 CM - S3N (73W) TL E4 IMARK	1	
3	1094300-009000	ZT350-V1 single rocker arm rear wheel (MT5.5×17/black)	1	
4	1260100-238000	ZT310-R1 rear wheel rim sign spring	1	
5	1210142-000100	ZT310-R1 single rocker black rim sign	1	
6	1184300-057000	ZT350 tire pressure sensor N (M8 straight head)	1	

PROCEDURE:

●Rear wheel assembly

Remove the 5 nuts with a 200N torque wrench and a 19# gauge sleeve.

Support the vehicle horizontally and let the rear wheels leave the ground.

Remove the rear wheel assembly.

Extend the tool from the left to remove the rim sign (5) from the rim and remove the plaque spring (4) from the placard(5).

●Bosch EFI: Tire pressure sensor

Remove the tire pressure sensor (6) built-in valve cap ① Use a tool to release the air, Then use a professional tire puller to remove the rear tire (2). Be careful to avoid the tire pressure sensor. Finally, use a 12# torx wrench to remove the valve nut ② and the flat washer ③, and then remove the tire pressure sensor.

●Maintenance

Tire: Check regularly the tire on cracks and air pressure.If the tire is ware to the marker, change the tire with same specification. See details in user manual. Ingradiant of tire include semi hot melt rubber. Area with too high temperature is not suitable. If temparature of outdoor is too low, storing the motorcycle in warm place or indoor is suggested in order to avoid frost crack. Normal temperaturestandard 280kPa.

Rim: Check if the rim has deformation or crack. Support the rim horizontally and check if it can rotate smoothly.

Disc brake plate: Thickness can not be less than 4mm. If not, change it.

CAUTION:

●Be careful while disassembling the tire and rim in case of damages on the components.

●After changing the tire, check air proof performace and dynamic balance.

●It should not be used because the tire self replenishment may block the air hole of the tire pressure monitoring sensor, resulting in inflation difficulty or tire pressure monitoring failure.

●Not enough tire pressure can cause abnormal wear and tare. Too high pressure in summer might have possibility of tire bursting.

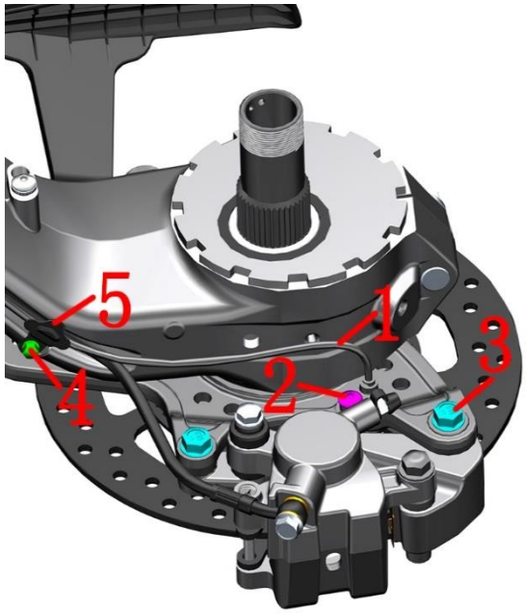

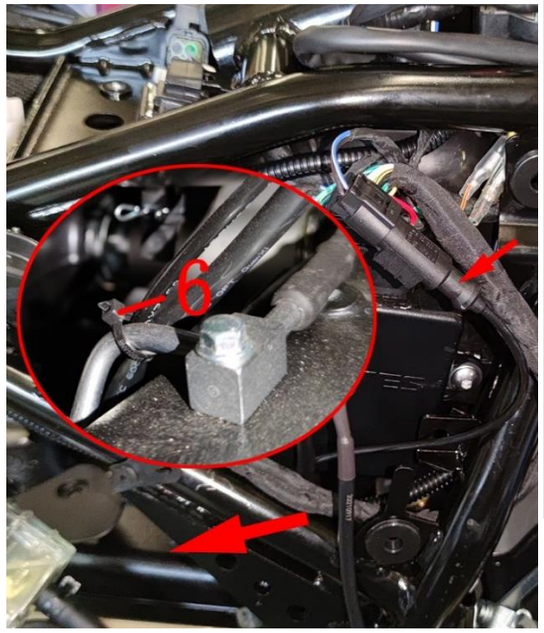

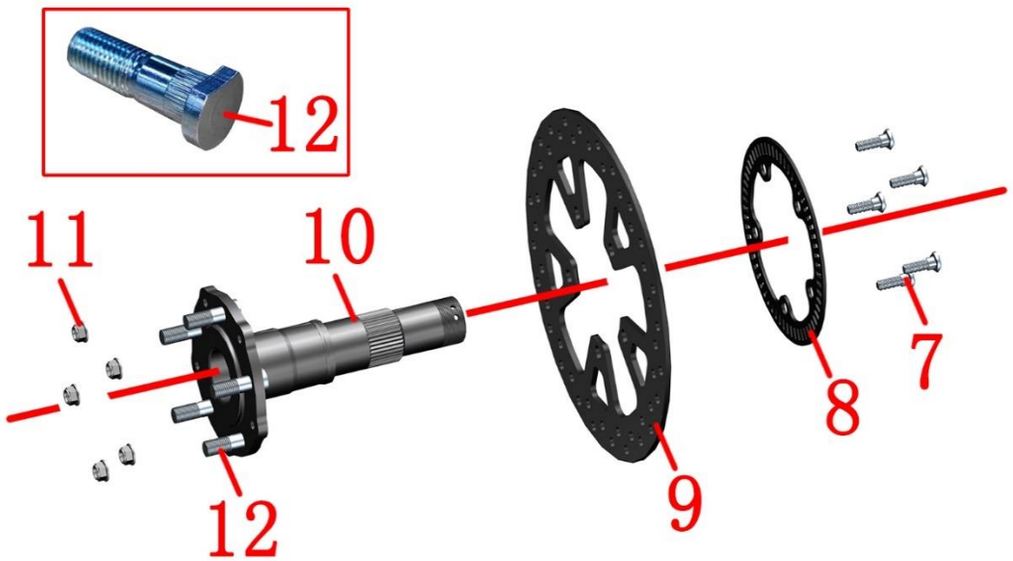

Fig.6 Rear wheel, swinging arm component		Rear axle assembly	CHK ADJ	
NO.	PART NO.	PART NAME	QTY	REMARKS
1	1181200-118000	Wheel speed sensor(A)	1	
2	1251100-102000	Non-standard bolt M6×16 (304 stainless steel)	1	
3	1251100-123093	Non-standard bolt M8×25 (color Zinc)	2	
4	1250104-006097	GB16674M6×12 (chromed/HH)	4	
5	1274200-119000	Single rocker rear flat fork tubing bracket	4	
6	1226000-218000	Grade 0 flame retardant tie (black 3.6×295)(5 pcs/after-sale)	1	
7		Non-standard inner hex bolt M8×25	5	
8	1274200-058000	ABS induction ring (60 teeth)	1	
9	1100100-784000	ZT350-GK rear brake disc (265×4.5)	1	
10	4024200-048000	ZT310 single rocker rear axle assembly (with bolt)	1	
11	1250305-002091	GB6187.1 M8(White Zinc)	5	24N.m
12	1251100-191000	Non-standard bolt M12×1.5×38 (color Znic)	5	after-sale

PROCEDURE:

●Rear axle outer assembly

To remove only the rear axle assembly, simply use a 14# sleeve to remove the 2 bolts (3) and remove the caliper from the mounting plate. Remove the rear axle assembly.

To replace the rear fork, you need to continue with the following steps:

Using 4# inner hexagon socket remove the bolt (2) and remove the wheel speed sensor (1) from the rear disc brake caliper mounting plate.

Using 8# sleeve remove the 4 bolts (4) and remove the tubing bracket (5).

Cut the strap (6) , and find the inside of the left rear skirt and remove the joint of the rear slab adapter cable. Locate the wheel speed sensor connector near the right air filter and remove it, and remove the wheel speed sensor (1).

●Rear axle assembly

Fix the bolt (7) with a 6# hexagon socket or T45 and then remove the nut (11) with a 14# sleeve.

Remove the induction ring gear (8) and the disc brake disc (9) from the rear axle assembly (10).

The rear axle assembly (10) already includes the rear axle and 5 bolts (12). The bolts (12) and the single rocker rear axles have an interference fit. If the bolts are removed and replaced separately, the connection must be firm and reliable, otherwise it may loosen and cause accidents. The bolt heads of the early production models are round and can be replaced directly with the trimmed state of the later production.

CAUTION:

●The replacement of the bolts (12) separately must be secure and reliable.

Fig.7 Rear wheel, swinging arm assembly		Rear auxiliary mud plate component 1	CHK ADJ	
NO.	PART NO.	PART NAME	QTY	CAUTION
1	1184200-030000	ZT310-R adapter cable of vice fender(L=2000)	1	
2	1224300-110000	Reverse buckle Velcro strap (20×200mm)	1	
3	1226000-218000	Grade 0 flame retardant tie (black 3.6×295)(5 pcs/afte	1	

PROCEDURE:

●Rear auxiliary mud board assembly

Find the 3 plugs at the transfer plug and unplug the shown three plugs.

Untie the strap(2).

Cut off the cable tie (3) on the upper right side of the rear flat fork.

Remove the 4 tubing brackets according to the steps on the previous page.

Carefully pull the auxiliary mudboard adapter cable out of the motorcycle from the vicinity of the battery and remove it to the rear auxiliary mudboard assembly, then roll up the adapter cable and tie it with a rope.

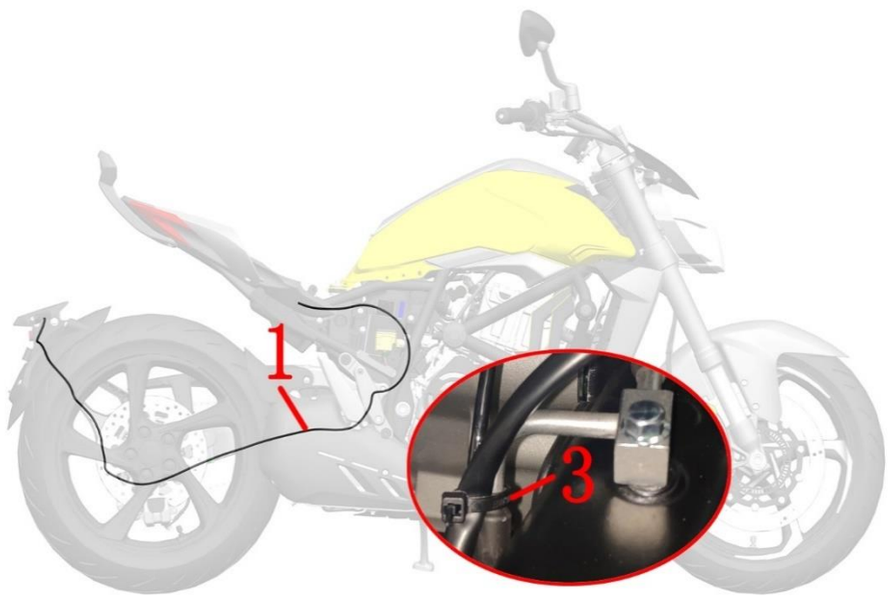

CAUTION:

●The seat cushion, left side cover, etc. must be removed in advance.

●Do not pull the cable hard when removing the sub-mud switch.

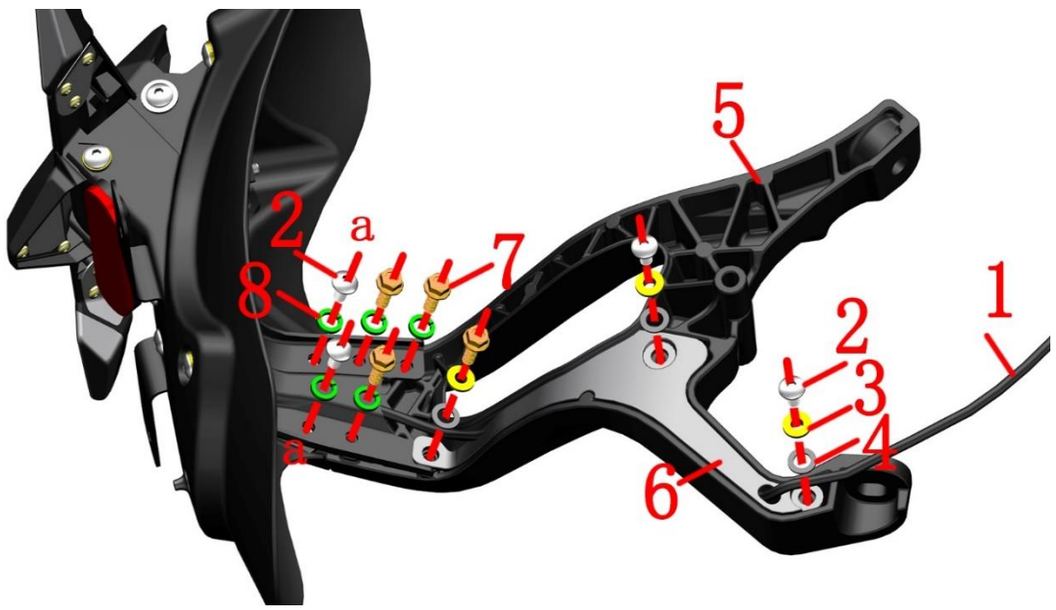

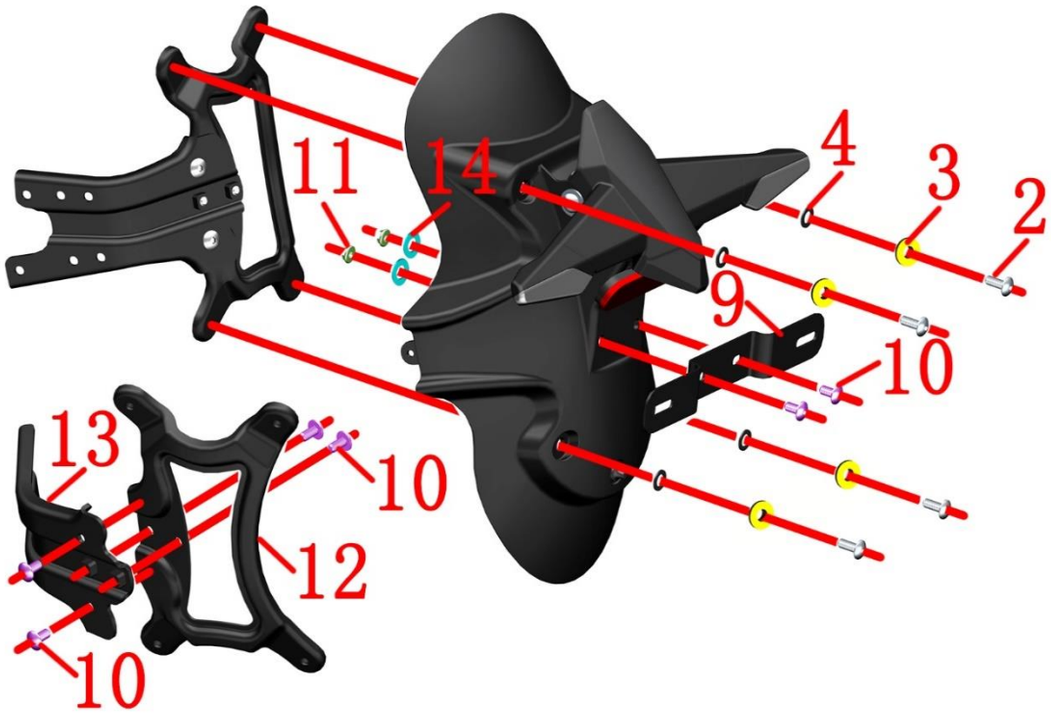

Fig.8 Rear wheel, swinging arm assembly		Rear auxiliary mud plate component 2	CHK ADJ	
NO.	PART NO.	PART NAME	QTY	CAUTION
1	1184200-030000	ZT310-R sub-mud board adapter cable (L=2000)	1	
2	1251100-102000	Non-standard bolt M6×16 (304 stainless steel)	8	
3	1274100-155095	Flanged bushing ϕ6.2×ϕ8.4×3.5 + ϕ14×1.5(5 pcs/after	7	
4	1241200-124021	flanging bushing buffer rubber (ϕ8.5×ϕ14×1)(5 pcs/af	7	
5	4024200-119022	ZT310-R1 rear sub-mud aluminum alloy bracket	1	
6	1224200-106000	ZT310-R1 rear auxiliary mud board retaining plate	1	
7	1250105-137093	GB5789M6×16 (environmental color)	4	
8	1250501-007093	GB93ϕ8 (environmental color)	5	
9	1270300-039000	HJ125-6 rear license plate bracket	1	
10	1251100-101000	Non-standard bolt M6×12 (304 stainless steel)	6	
11	1250303-040093	GB6177.1M6 (environmental color)(5 pcs/after-sale)	2	
12	4024200-036000	Rear section of ZT310-V rear mud plate iron support	1	
13	4024200-035000	Front section of ZT310-V rear mud plate iron support	1	
14	1250503-021093	GB97.1ϕ8 (environmental color)	2	

PROCEDURE:

●Retaining plate

Use 4# inner hexagon to remove bolt (2) and use 10# sleeve to remove bolt (7), remove the flange bushing (3) the rubber pad(4),and finally remove the retaining plate(6).

●Aluminum alloy bracket

Use a 10# sleeve to remove 3 bolts and bolts (7) and use a 4# inner hexagon to remove 2 bolts (2), then remove 5 pcs of spring washer(8), Separate the aluminum bracket from the rear fender assembly.Due to the structural optimization "a" should be reduced 2 pcs of bolt(2) and 2 pcs spring washe(7).

●Back license plate bracket assembly

Fix the two bolts (10) at the license plate bracket (9) with 4# inner hexagon; remove the nut (11) with a 10# sleeve, take off pads (14),and remove the license plate bracket (9) and bolt (10).

●Iron bracket

Use 4# inner hexagon to remove 4 bolts (2), take off the flanging bush (5), rubber pad (6); finally take off the iron bracket assembly.

Use 4# inner hexagon to remove 4 bolts (10), and separate the rear part (12) and the front part (13) of the iron bracket.

CAUTION:

●Do not pull the cable hard when removing the vice fender connecting cable.

●When reassembling, first check if there is any pressure on the wire to prevent short circuit when tightening the bolt.

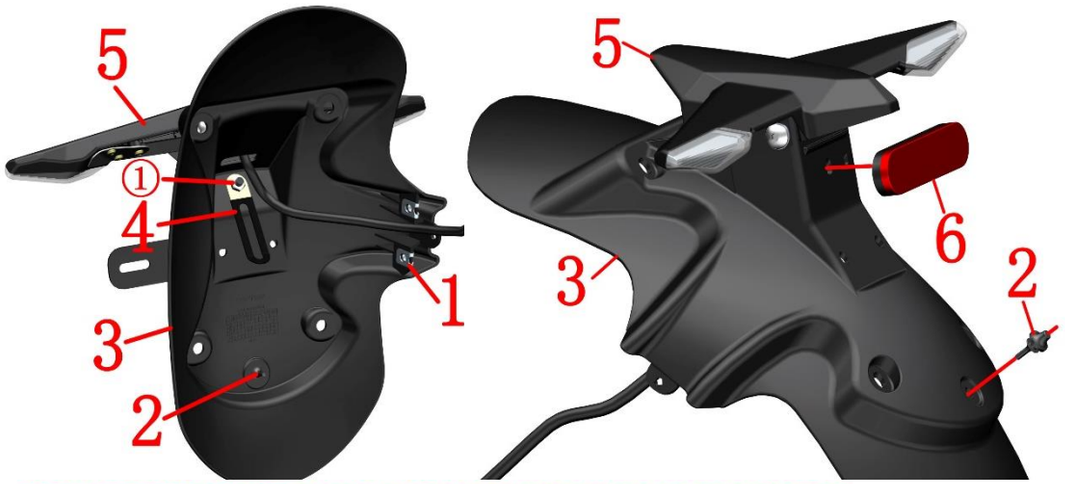

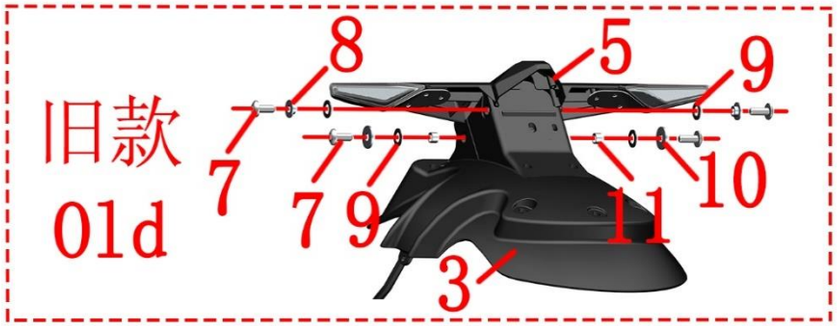

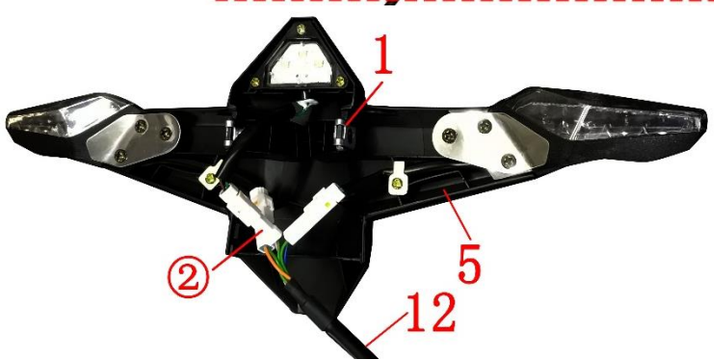

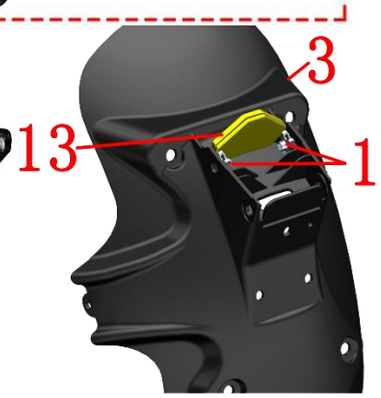

Fig.9 REAR WHELL COMPONENT		Rear sub-mud assembly 3	CHK ADJ	
NO.	PART NO.	PART NAME	QTY	CAUTION
1	1251300-063093	Splint M6×11×15 (environmental color)	6	
2	1244100-136000	ZT250-S rear liceness buffer rubber(5 pcs/after-sale)	1	
3	1224200-091000	ZT310-R rear Associate fender	1	
4	1276001-054000	ϕ8 clip(L=73)(5 pcs/after-sale)	1	
5	1174200-035000	ZT310 rear turn light (including license plate light)	1	
6	1174100-015000	ZT250-S rear reflector(after-sale)	1	
7	1251100-102000	Non-standard bolt M6×16 (304 stainless steel)	4	
8	1274100-155095	Flanged bushing ϕ6.2×ϕ8.4×3.5 + ϕ14×1.5(5 pcs/after	2	
9	1241200-124021	flanging bushing buffer rubber (ϕ8.5×ϕ14×1)(5 pcs/af	4	
10	1250502-010093	GB96.1ϕ6 (environmental color)	2	
11	1274100-018000	ZT250-S muffler anti-scalding bushing	2	
12	1184200-030000	ZT310-R Associate fender transfer cable (L = 2000)	1	
13	1244200-082000	ZT310 Rear auxiliary mud board retaining rubber plug	1	
14	1251100-375000	Hexagon socket head screw M6×16+8.5×5 SUS302	2	

PROCEDURE:

●Back reflector, license plate cushion rubber

Flip to the back, remove the nut① that comes with the rear reflector(6), remove the clamp(4) and the back reflector. Remove the plate cushion rubber(2) and remove the 2 plywood nuts(1) on the back of the rear mudguard fender(3).

●Steering lights, fender sub-assemblies

Remove the bolts(7)on the left and right sides, and remove the flange bushing (8), cushion rubber(9), anti-scalding bushing (11) and gasket(10) or bolt(14). Disassemble the turn signal and fender subassembly. Note that the sub-mud switch cable(12)cannot be forcibly pulled.

●fender sub-assembly

Remove the 2 plywood nuts(1) and retaining rubber plug(13) from the fender subassembly(3).

●turn signal subassembly

Remove the 2 plywood nuts(1) from the turn signal(5). Remove the 3 joints of② and remove the sub-mud switch cable(12).

CAUTION:

●Do not pull the cable hard when removing the sub-mud switch.

●When reassembling, check if there is any pressure on the wire to prevent it from tightening.

Short circuit caused by bolts. Pay attention to the lamp connector, do not insert the wrong, turn left Green + orange; right turn signal is green + blue; license plate light is green + pink.

●The old model uses M6×16 bolt + GB96.1 ϕ 6 + flanging bushing buffer glue + muffler anti-ironing board bushing 2 pieces of structure. Buy 2 pieces " 1251100-375000 Hexagon socket head screw M6×16+ 8.5×5 SUS302 " instead to reduce assembly steps.

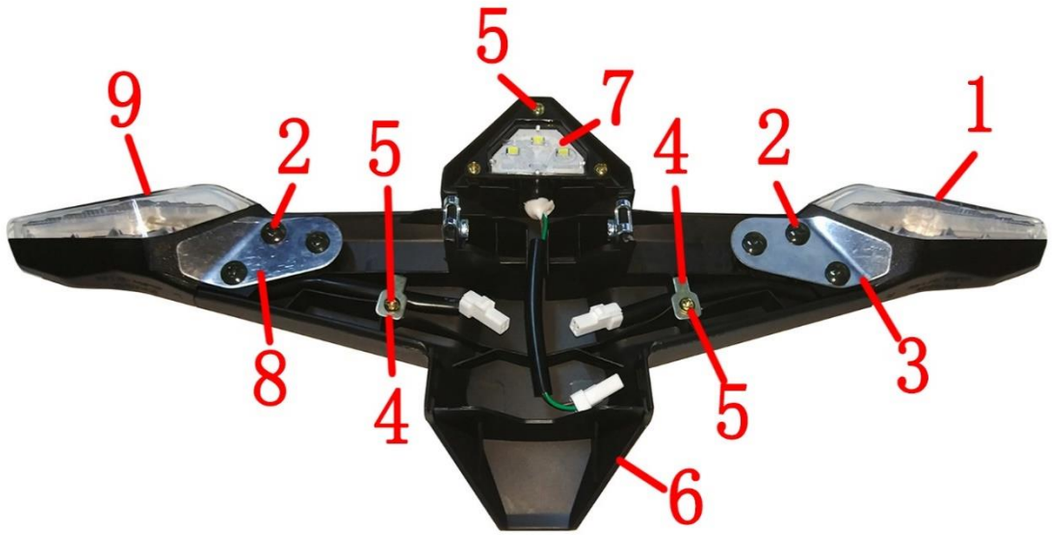

Fig.10 Rear wheel, swinging arm assembly		Rear turning light parts for after sales service	CHK ADJ	
NO.	PART NO.	PART NAME	QTY	CAUTION
1	1174200-020000	ZT310-X Rear right turning light	1	
2	1251200-056095	Non-standard cross self-tapping screw ST3.8×10 (military green)	6	
3	1274200-331000	ZT310-X rear right turn signal fixing bracket	1	
4	1274200-332000	ZT310 rear turn signal fixing wire clip	2	
5	1251200-101000	Non-standard cross self-tapping screw ST3.0×7 (color zinc)(5 pcs/after-sale)	5	
6	1224200-120000	ZT310 rear turn signal bracket	1	
7	1174200-021000	ZT310-X Liensed lights	1	
8	1274200-330000	ZT310-X rear left turn signal fixing bracket	1	
9	1174200-019000	ZT310-X Rear left turning light	1	

PROCEDURE:

●Rear turning light（license lamp included）

Grip the rear turning light holder (6) then disassemble bolts(5) on the license lamp(7).

Disassemble 3pcs bolts(2) on the diagram left side, and then dismantle left fixing bracket(8) ;disassembly the screw(5) and then reomove the clip(4),take off the left turning light(9).Follow the steps above dismantle right fixing bracket(3), clip(4) and right turning light(1).

CAUTION:

●Avoid fasterning the bolt on the cable while reassembling in case of shrt circuit.

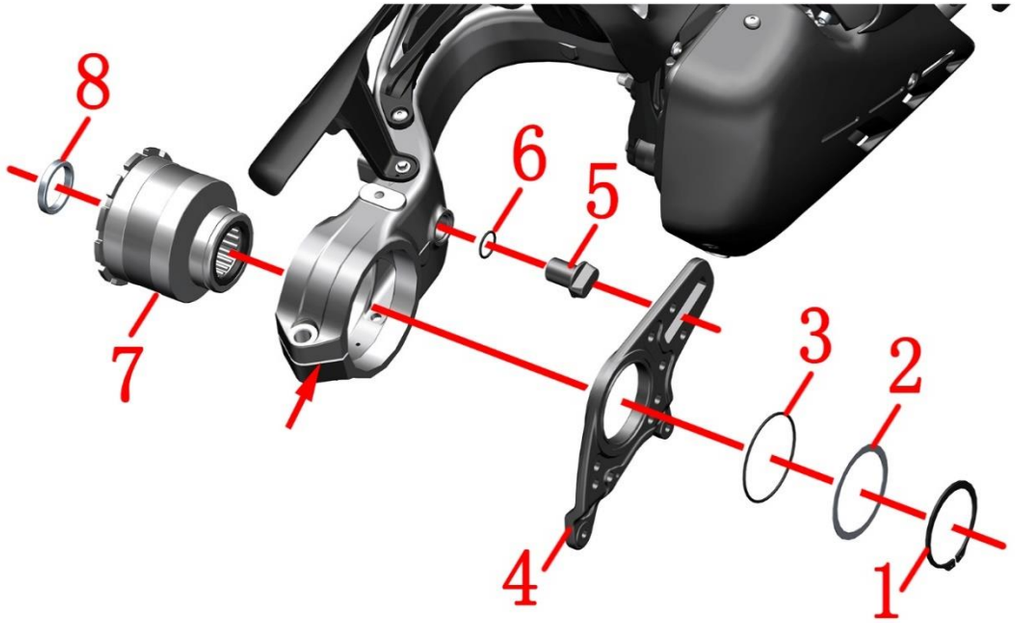

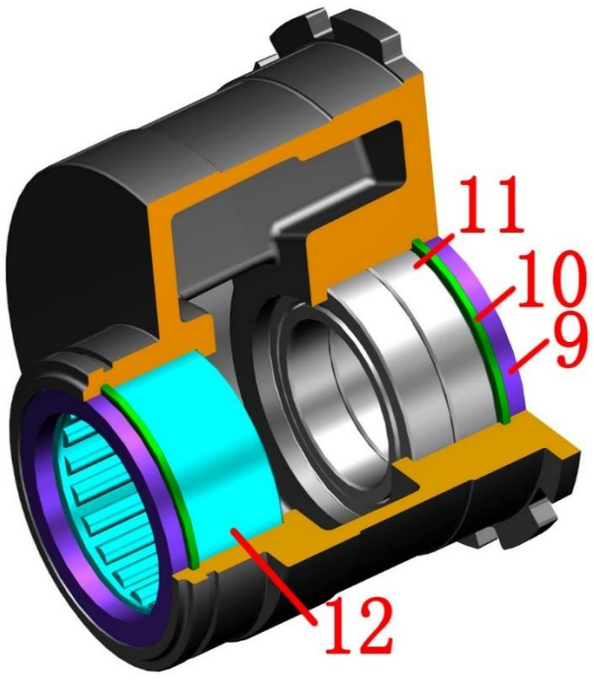

Fig.11 Rear wheel, swinging arm component		Chain adjuster assembly	CHK ADJ	
NO.	PART NO.	PART NAME	QTY	CAUTION
1	1250700-009000	Shaft type A circlip ϕ75×2.5	1	
2	1251500-096000	ϕ90 × ϕ76 × 1 washer	1	
3	1244200-105000	O-ring ϕ80 × 2.65 (inner diameter × wire diameter)	1	
4	1100101-193000	ZT350 - X1 Single-Arm Rear Disc Brake Adapter Plate (Dark Grey Matte)	1	
5	1100100-732051	ZT310 Rear disc brake mounting plate limited block(homemade/dark grey matte)	1	
6	1244200-066000	O-ring seal (ϕ22.2×2.4)	1	
7	4024200-046000	ZT310 single rocker eccentric chain adjuster assembly (including bearing/oil seal)	1	
8	1274100-104000	Bushing Φ50×Φ40×7.5	1	
9	1244200-044000	ZT310 single rocker arm Φ50×Φ62×5 oil seal	2	Eccentric chain adjuster assembly after sale
10	1250700-008000	Hole type A circlip ϕ62×2	2	
11	1250601-094000	GBT 276-61908-2RS/P6 deep groove ball bearing	2	
12	1250602-034000	NK50/25 needle roller bearing	1	

PROCEDURE:

●Disc brake mounting plate

First remove the retaining ring with the shaft circlip (1); then remove the washer (2) and O-ring (3);and finally remove the disc brake mounting plate (4).

Take the lower limit block (5) and remove the seal ring(6).

●Chain adjuster assembly

After removing the bushing (8) remove the chain adjuster assembly(7) from the rear fork. If you have difficulty removing it, you can use a flat-blade screwdriver to insert the slot at the arrow indication, and you can open it with a little force.

●Chain adjuster assembly bearing maintenance

It is recommended to inspect, maintain and clean the bearings every 6,000 km. After removing the chain adjuster assembly according to the previous steps, clean the bearings inside with gasoline or diesel. Carefully check the bearings for damage, smooth rotation, and noise. After confirming the pass, wipe it with a clean, lint-free cloth and re-apply the grease evenly on the bearing.

CAUTION:

●It is recommended to inspect, maintain and clean the bearings every 6,000 km.

●If the disassembled chain adjuster assembly is inspected before the reassembly, carefully check whether the oil seal is damaged; the bearing needs to be pressed into place.

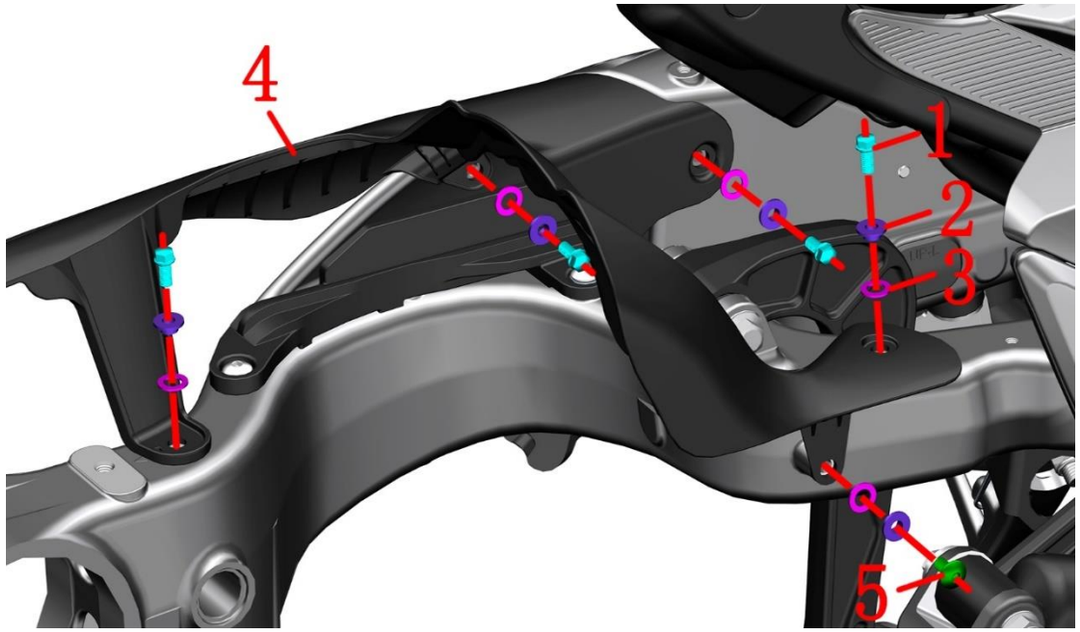

Fig.12 Rear wheel, swinging arm component		Rear mud board	CHK ADJ	
NO.	PART NO.	PART NAME	QTY	CAUTION
1	1250104-006097	GB16674M6×12 (chromed/HH)	4	
2	1274100-155095	Flanged bushing ϕ6.2×ϕ8.4×3.5 + ϕ14×1.5(5 pcs/after	5	
3	1241200-124021	flanging bushing buffer rubber (ϕ8.5×ϕ14×1)(5 pcs/after sale)	5	
4	1224300-108000	ZT350-VX rear mud board	1	
5	1251100-101000	Non-standard bolt M6×12 (304 stainless steel)	1	

PROCEDURE:

●Rear mud board

Use 8# sleeve to remove bolt (1) on the upper right side, remove the bushing (2) and the cushion rubber (3).

Remove the bolt (5) on the lower right side with a 4# inner hexagon, and remove the bush (2) and the cushion rubber (3).

Using 8# sleeve remove the bolt (1) on the inside of the left inner side and remove the bushing (2) and the cushion rubber (3).

Using 8# sleeve remove the bolt (1) at the rear left side and remove the bushing (2) and cushion rubber (3).

Hold the rear inner mud plate (4), use an 8# sleeve to remove the bolt (1) on the upper middle of the left side, and remove the bush (2) and the cushion rubber (3).

CAUTION:

●When heating and tearing the applique, be careful not to align the same part for a long time to prevent damage to the inner mud board.

●The muffler assembly and lower shroud assembly must be removed in advance.

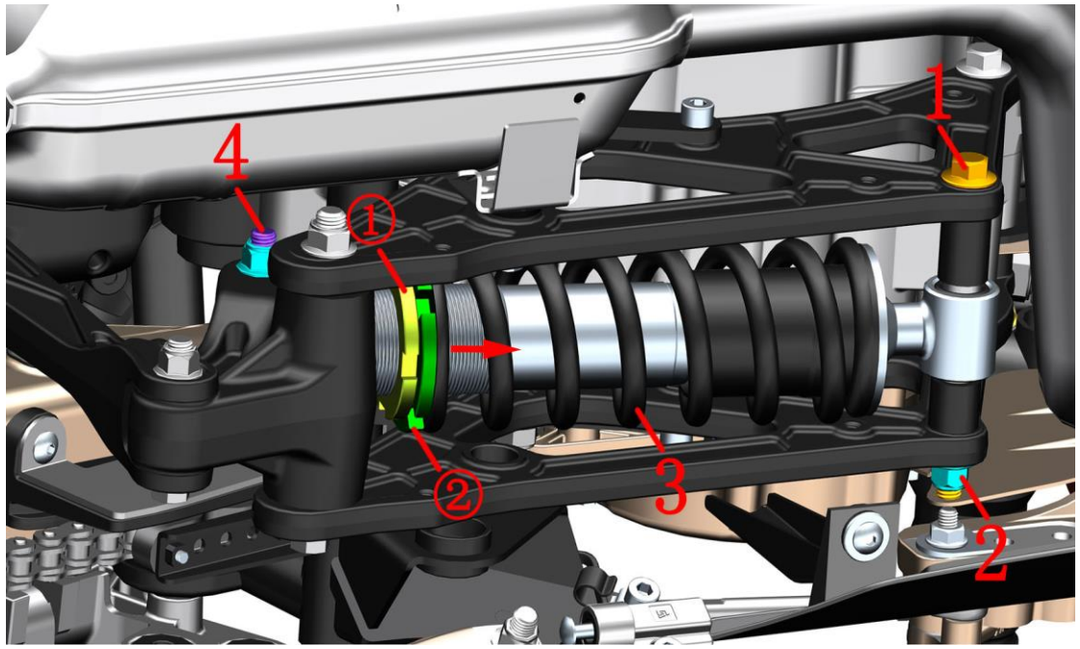

Fig.13 Rear wheel, swinging arm component		Rear shock absorber	CHK ADJ	
NO.	PART NO.	PART NAME	QTY	CAUTION
1	1251112-020000	GB5187 non-standard bolt M12×1.25×153(10.9 garde/dacromet)	1	
2	1250305-055091	GB6187.1 M12×1.25(White Zinc)(5 pcs/after-sale)	2	
3	1114300-004000	ZT350-VX Rear shock absorber	1	
4	1251112-019000	GB5187 non-standard bolt M12×1.25×85(10.9 garde/dacromet)	1	

PROCEDURE:

●Rear shock absorption

Tilt the vehicle to the left with the side support as the fulcrum, and support the muffler back pressure bag with a firm stool to keep the rear wheel off the ground. Tie the front disc brake handle with a tie to prevent the car from running forward. Support the whole vehicle firmly before proceeding to the next step.

One person uses 14# sleeve to hold the head of bolt(1) or (4)respectively, and one person uses 17# sleeve to remove nut(2)). Remove the rear shock absorber(3) from the vehicle.

●Adjust the soft and hard shock absorption

Loosen the adjusting nut ① with a hook wrench, then screw the adjusting nut ②, adjust ② in the direction of the arrow, compress the damping spring, and then the damping becomes hard, otherwise it becomes soft. Lock the adjusting nut ① after it is adjusted properly. It is recommended to adjust reasonably. Too soft or hard will affect the driving experience.

CAUTION:

●The rear shock-absorbing connecting rod plate must be disassembled in advance.

●Use suitable tool to support the motorcycle. Avoid accidents caused by falling down. Single person operate it is prohibited.

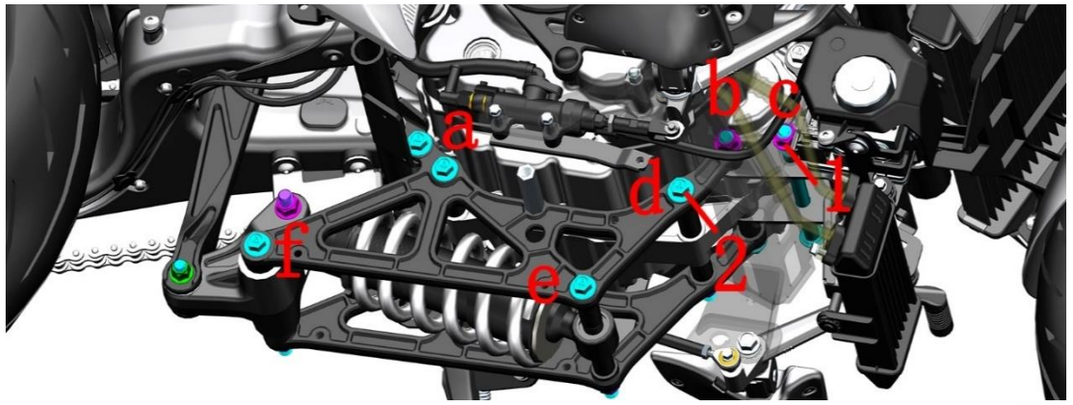

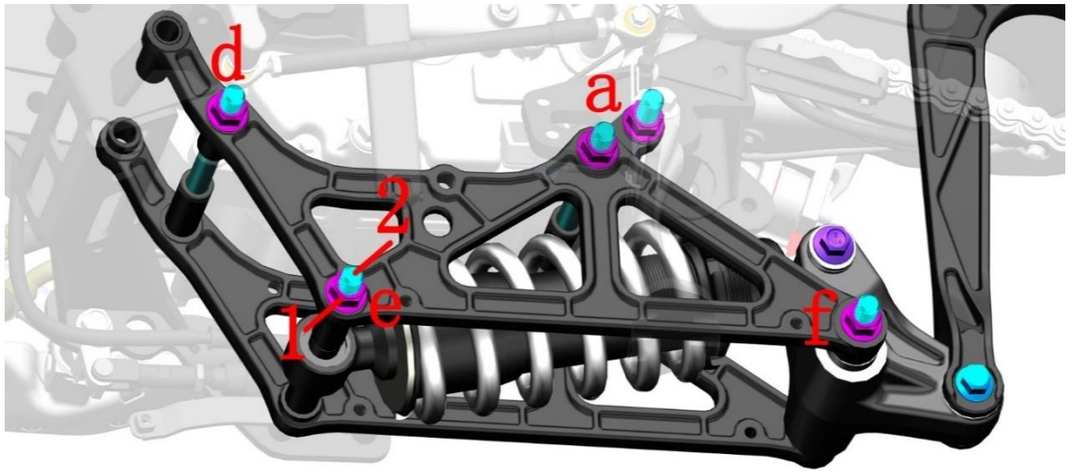

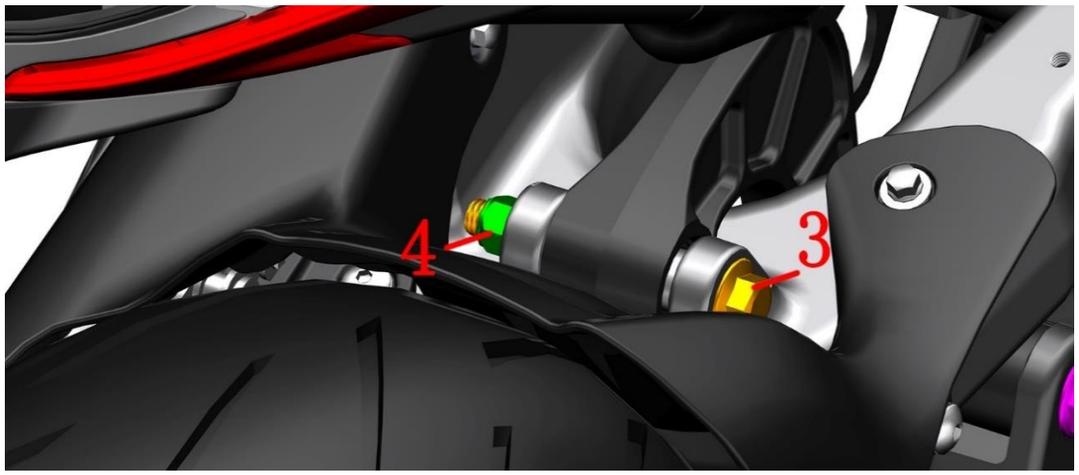

Fig.14 Rear wheel, swinging arm component		Rear shock absorption 1	CHK ADJ	
NO.	PART NO.	PART NAME	QTY	CAUTION
1	1250305-055091	GB6187.1 M12×1.25(White Zinc)(5 pcs/after-sale)	7	
2	1251112-020000	GB5187 non-standard bolt M12×1.25×153(10.9 garde/dacromet)	7	
3	1251100-132003	Non-standard bolt M10×1.5×80 (Dacromet)	1	
4	1251300-057093	Non-standard nut M10×1.5(Dacromet)	1	

PROCEDURE:

●Rear shock absorber rod assembly

After supporting the vehicle firmly, remove the shroud, muffler and rear inner fender first. Be careful not to support the rear flat fork assembly.

Use a 17# Torx wrench to fix the nuts(1) at b and c of the front pedal bracket on the right side, and use a 14# socket on the left to remove the bolts(2) and then remove the nuts(1). Insert the bolt at b first.

Use a 17# Torx wrench to fix the 2 nuts(1) at the a of the front pedal bracket respectively on the left side, and use a 14# socket on the right to remove the bolt(2) and then remove the nut(1).

Use a 14# sleeve to fix the bolts at d\e\f on the right side(2), and use a 17# sleeve to remove the nut at d on the left side(1) Do not remove the bolts here, e and f. The nut does not need to be removed after loosening 3 to 5 threads.

Use a 14# Torx wrench to fix the nut(4) and then use a 14# socket to remove the bolt (3).

After holding the rear shock absorber assembly, remove bolt b and bolt d, and remove the rear shock absorber assembly from the vehicle.

CAUTION:

●Removing the rear shock absorber assembly will cause the rear flat fork assembly to be unable to support the entire vehicle, so do not support it on the rear flat fork.

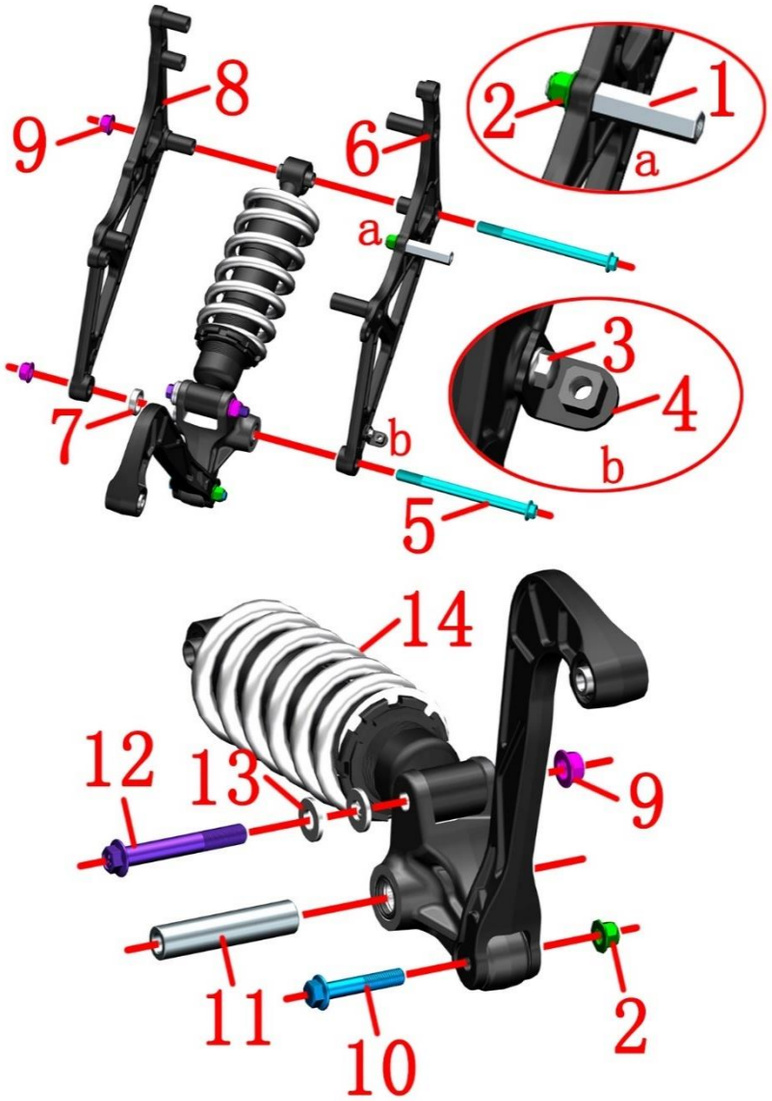

Fig.15 Rear wheel, swinging arm component		Rear shock absorption 2	CHK ADJ	
NO.	PART NO.	PART NAME	QTY	CAUTION
1	1274300-069094	ZT350-VX Muffler Front Mounting Stud	1	
2	1251300-057093	Non-standard nut M10×1.5(Dacromet)	2	
3	1250104-006097	GB16674M6×12 (chromed/HH)	1	
4	1274200-221000	ZT310-V engine right cover decorative cover mounting bracket	1	
5	1251112-020000	GB5187 non-standard bolt M12×1.25×153(10.9 garde/dacromet)	2	
6	4024300-008000	ZT350-VX rear shock lower bracket right reinforcement plate	1	
7	1274300-074000	ZT350-VX rear shock absorber link bushing (left)	1	
8	4024300-007000	ZT350-VX rear shock-absorbing lower bracket left reinforcing plate	1	
9	1250305-055091	GB6187.1 M12×1.25(White Zinc)(5 pcs/after-sale)	3	
10	1251100-291000	Non-standard bolt M10×1.5×55(Dacromet)	1	
11	1274300-060000	ZT350-VX rear shock linkage front bushing	1	
12	1251112-019000	GB5187 non-standard bolt M12×1.25×85(10.9 garde/dacromet)	1	
13	1251500-034000	12.3×26×3 gasket	2	
14	1114300-004000	ZT350-VX rear shock absorber	1	

PROCEDURE:

●Rear shock absorber reinforcement plate

Make a mark with a marker first, then hold the bracket (4) and remove the bolt (3) with an 8# sleeve, and take off the bracket (4).

Use a 14# torx wrench to fix the stud (1), and use a 14# torx wrench to remove the nut (2). Then use a 14# Torx wrench to remove the stud (1).

Use a 14# sleeve to fix the head of the bolt (10), remove the nut (2) with a 14# sleeve, and then remove the bolt (10) after grasping the rear flat fork connecting rod assembly.

Use a 14# sleeve to fix the head of the bolt (5) and then use a 17# sleeve to remove the nut (9). Disassemble the left reinforcing plate (8), bushing (7), right reinforcing plate (6) and rear shock absorber assembly.The bushing (7) will be canceled for vehicles produced subsequently due to structural optimization. If the new rear damping link is replaced, it is not necessary to install this bushing.

●Rear shock absorber link assembly

Remove the bushing (11), fix the head of the bolt (12) with a 14# sleeve, and then remove the nut (9) with a 17# sleeve. Take out the bolts (12) and remove the 2 pieces of spacers(13), the rear shock absorber (14) and the rear shock absorber link assembly.

CAUTION:

●When assembling the bracket (4), do not tighten the bolts (3) first, you need to put the rear shock absorber back into the vehicle and use the rear shock absorber link baffle to locate the bracket position and then tighten it.

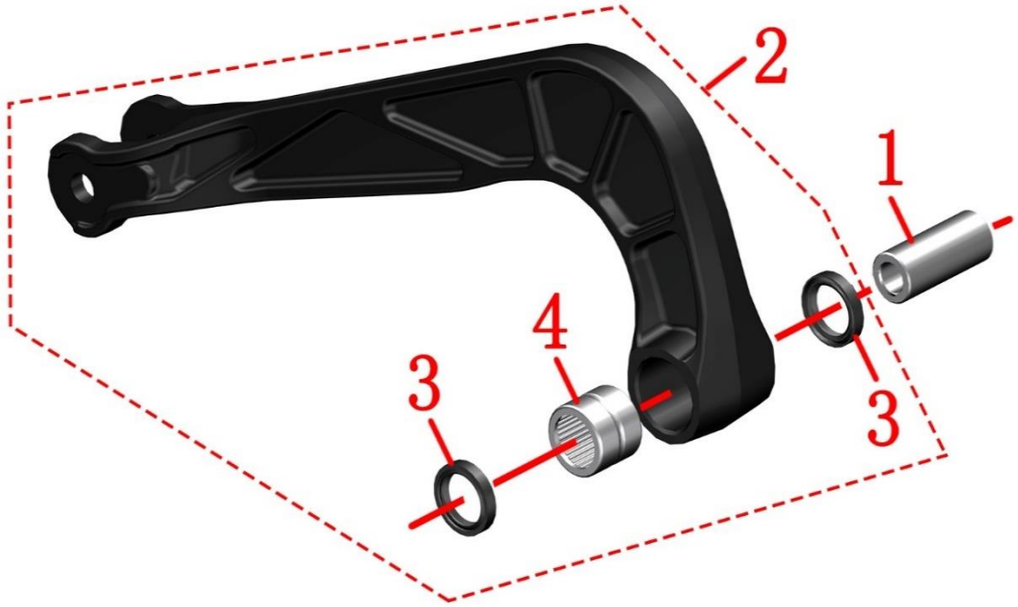

Fig.16 Rear wheel, swinging arm component		Rear shock absorption 3	CHK ADJ	
NO.	PART NO.	PART NAME	QTY	CAUTION
1	1274200-306000	ZT310 rear shock-absorbing needle roller bearing bushing	1	
2	4024300-030000	ZT350-VX rear flat fork connecting rod assembly (including bearing/oil seal)	1	
3	1244200-130000	ZT310 rear shock absorber KRH oil seal	4	after-sale
4	1250602-038000	ZT310 rear shock absorber KRH needle roller bearing	2	
5	1274200-282041	ZT310-VX rear shock linkage rear bushing	1	
6	4024300-031000	ZT350-VX rear shock absorber connecting rod assembly (including bearing/oil seal)	1	
7	1104100-005000	ZT250-S oil-sealed TC20×26×4	2	after-sale
8	1094100-001000	ZT250-S needle bearing (HK2016)	2	

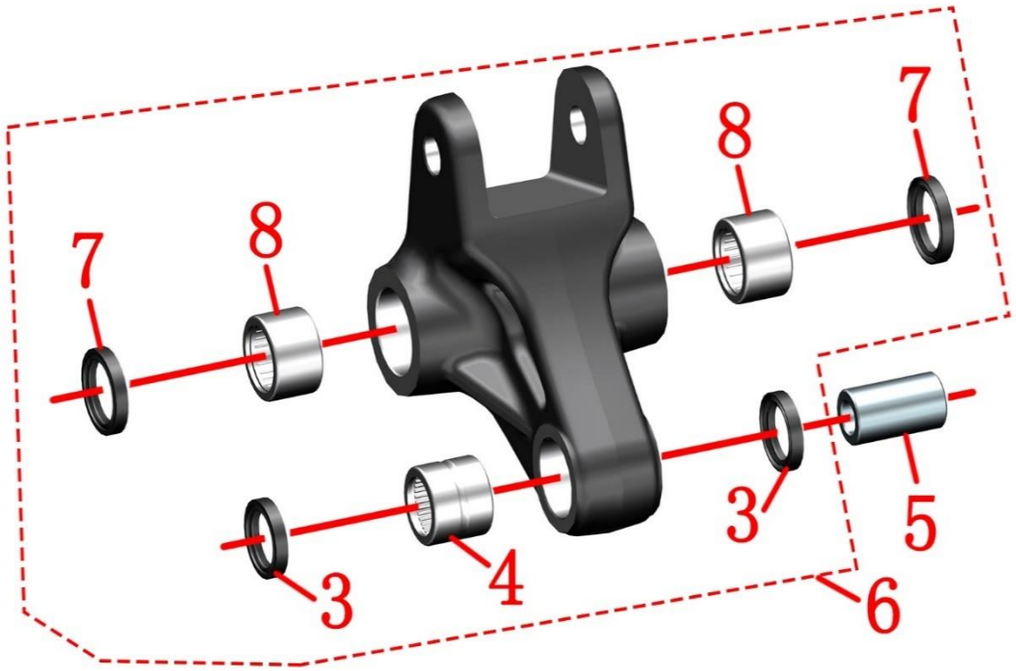

PROCEDURE:

●Rear flat fork connectiong rod assembly

Take off the front bushing(1).

The oil seal(3) and needle roller bearing(4) on the rear flat fork connecting rod assembly (2) are all press-fitted by interference pressure. If there is no malfunction, it is not recommended to disassemble it by yourself.Rear flat fork connectiong rod assembly(2) already contains oil seals and bearings.

●Rear shock absorption assembly

Take off the rear bushing(5).

he oil seal(3)&(7) and needle roller bearing(4)&(8) on the rear shock absorption assembly (6) are all press-fitted by interference pressure. If there is no malfunction, it is not recommended to disassemble it by yourself.Rear shock absorption assembly (6) already contains oilseal(3)&(7) and needle roller bearing(4)&(8).

CAUTION:

●Suitable grease can be added to reduce resistance at needle roller bearings.

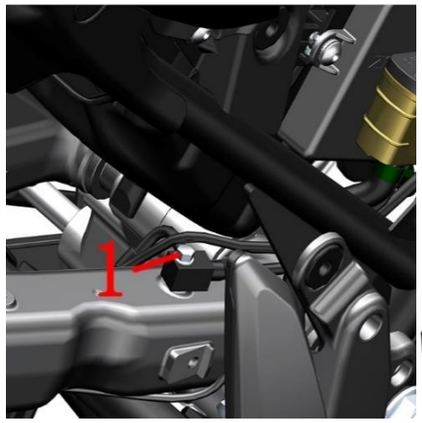

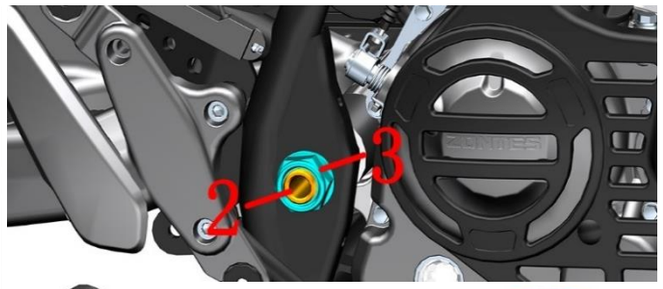

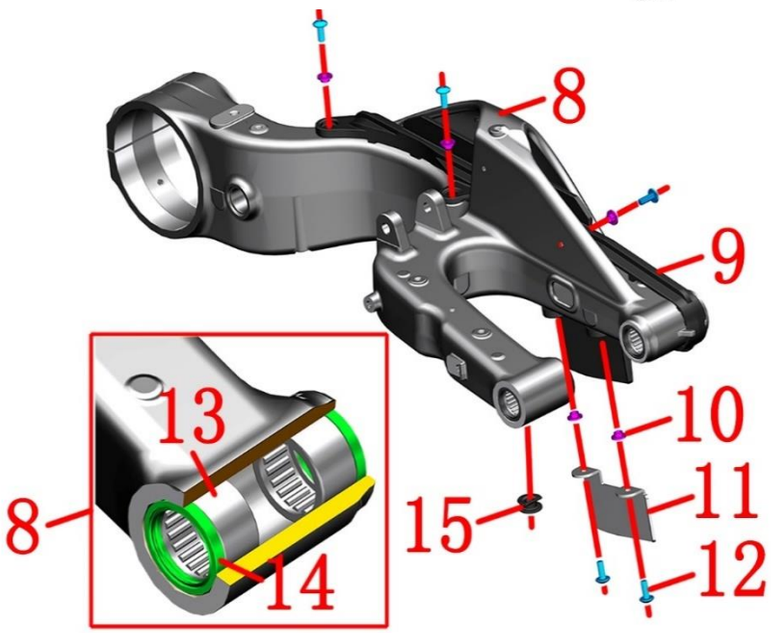

Fig.17 Rear wheel, swinging arm component		Rear fork component	CHK ADJ	
NO.	PART NO.	PART NAME	QTY	CAUTION
1	1251100-061093	M6×22 Hex flang bolt thread level 8.8 (color Zinc)	1	
2	1094200-009000	ZT310-V rear wheel hollow shaft Φ20×345	1	
3	1251300-067000	ZT250-R rear wheel hollow shaft nut	1	110±5N.m
4	1020242-414000	ZT310-VX rear fork shaft left bushing	1	
5	1020242-415000	ZT311-VXrear axis right bushing	1	
6	1244200-086000	ZT310 single rocker arm aluminum alloy flat fork left d	1	
7	1244200-085000	ZT310 single rocker arm aluminum alloy flat fork right	1	
8	4074200-008051	ZT310-VX dark gray single rocker aluminum alloy rear fork assembly (including bearing/oil seal)	1	
9	1244200-055000	ZT310 single arm rear fork wear block	1	
10	1274100-155095	Flanged bushing ϕ6.2×ϕ8.4×3.5 + ϕ14×1.5(5 pcs/after	5	
11	1274200-127000	ZT310 single arm rear fork anti-wear block fixing brack	1	
12	1251100-102000	Non-standard bolt M6×16 (304 stainless steel)	5	
13	1250602-035000	HK2516 needle roller bearing	4	Rear fork assembly after sale
14	1244200-079000	ZT310 single rocker arm Φ25×Φ32×4 oil seal	4	
15	1244200-101000	ZT310 single rocker arm aluminum alloy rear fork front dustproof rubber plug	1	

PROCEDURE:

●Rear swinging arm assembly

Remove the bolt(1) with 8# sleeve.

Person 1 hold the head of rear swinging arm axle(2) with the 24# socket sleeve. Person 2 disassemble nut(3) with the 30# socket sleeve.

Person 1 hold the rear swinging arm assembly. Person 2 take off rear swinging arm after disassembling rear swinging arm axle(2) with suitable tool.

Remove the bushing(4) and (5), the left dust-proof rubber plug(6), and the dust-proof rubber plug (7),and the rubber plug(15) from the rear fork assembly.

●Abrasionproof block of rear swinging arm

Remove the five bolts (12) and the flange bushing (10) with the 6# hexagon socket tool and remove the fixing bracket (11)and the wear-resistant block (9) from the rear fork assembly(8).

●Rear fork after sale

The oil seal (14) and the needle bearing(13) are used for interference compression. Please ensure that they have the ability to disassemble and disassemble.

CAUTION:

●It is strictly forbidden to hit the threaded part of the rear axle with a hammer.

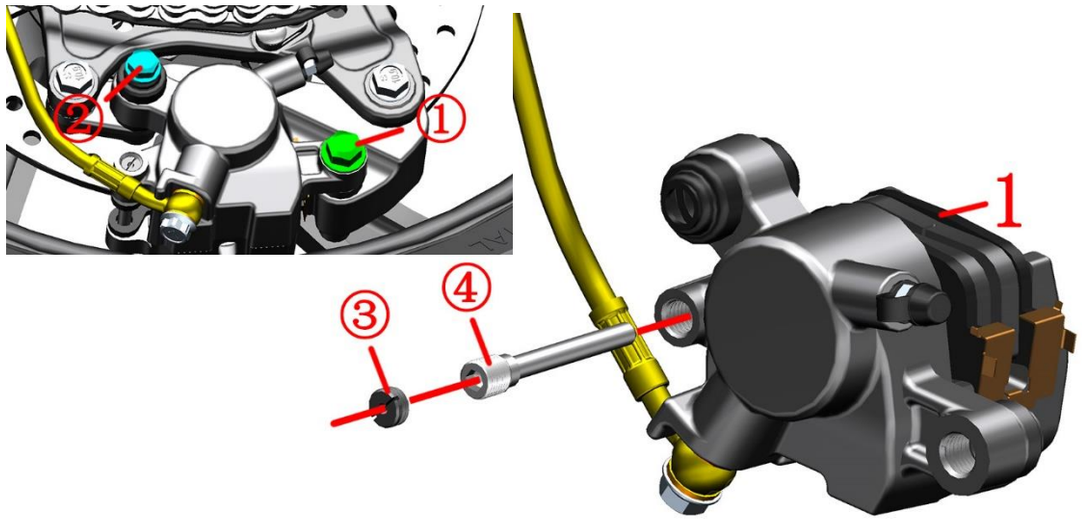

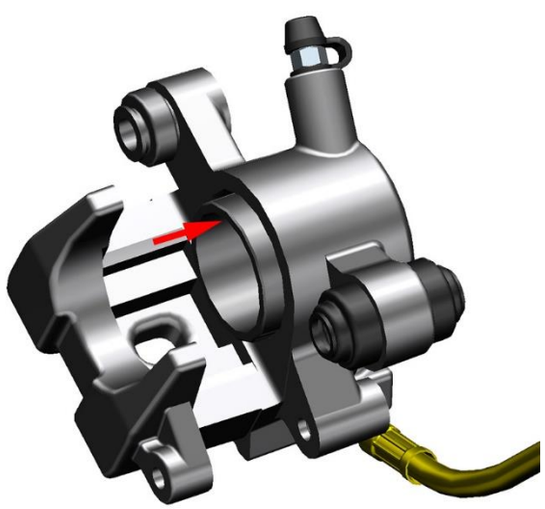

Fig.18 Rear wheel, swinging arm assembly		Change rear brake arresters	CHK ADJ	
NO.	PART NO.	PART NAME	QTY	CAUTION
1	1100100-092000	ZT250-S rear disc brake arrester(HS10)	1	

PROCEDURE:

●Disassemble disc brake arrester

Loosen the upper slide shaft① with a 14 mm sleeve.

Loosen the lower slide shaft② with a 12mm wrench.

Remove the slide shaft and remove the rear brake caliper.

Use strait screwdriver to disassemble nut③.

Tighten the pin axle④ with 5mm hex socket tool.

Take off rear disc brake arrester(1).

●Change rear disc brake arrester

Put the piston of clamp towards the direction of arrow to the end. See photo left below. To reduce resistance, you can disassemble the cross bolt on rear disc brake main pump oil cup. Take off the top cover and sealing gasket. Remember to rebound the pister afterwards.

The new arrester must fit tightly the slot. See photo right below.

Tighten the pin axle④ with 5mm hex socket tool.

Tighten nut③ with strait screwdriver.

Tighten the pin axle① with 14mm hex socket tool.Torque is 34N.m.

Use a 12mm wrench to lock the lower slide shaft ②.

Step on braking pedal several times until braking force is recovered.

CAUTION:

●Check regularly the arrester and disc brake plate status.

●To change arresters in qualified mainenance spot are suggested.

●After changing the arrester, adjust the height of braking pedal according to "Foot pedal, gear shift rod assembly" if necessary.

●It needs running-in for about 300km after changing new arresters. During this period, leave enough braking distance while riging.

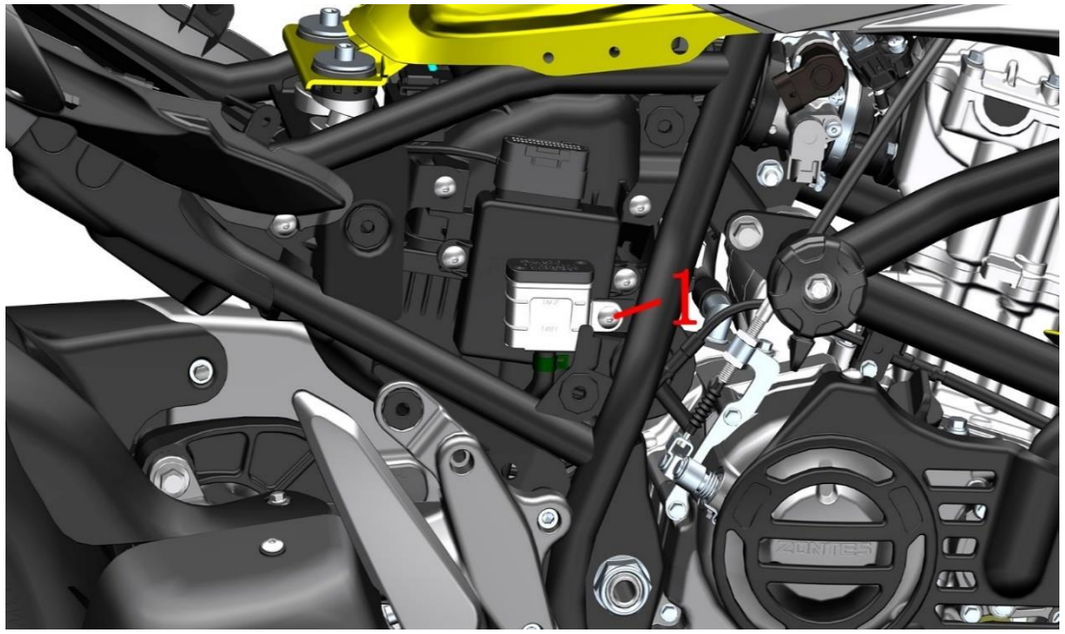

Fig.19 Rear wheel, swinging arm assembly		Rear brake main pump adds brake fluid	CHK ADJ	
NO.	PART NO.	PART NAME	QTY	CAUTION
1	1251100-102000	Non-standard Bolt M6×16	1	

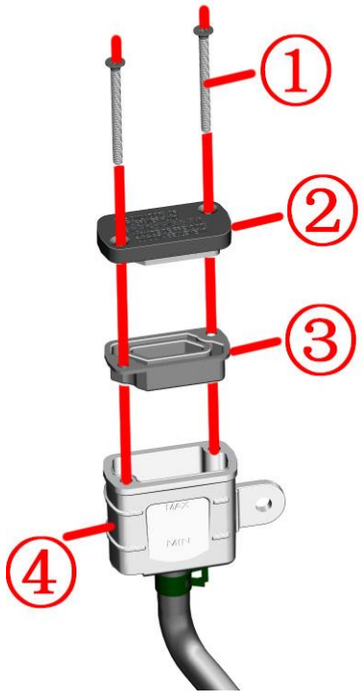

PROCEDURE:

●Add disc brake liquid

Remove the seat cushion and the right side cover first; remove the bolt (1) with 4# inner hexagon.

Pull out the oil cup④; Should always remain above the oil tube interface, parallel to the ground. Avoid braking failure caused by air getting into the oil circulation. Disassemble bolt① with cross screwdriver.

Take off oil cup cap②, sealing gasket③.

Keep the top of oil cup④ parallel to the ground. Add DOT4 braking liquid. Ensure the liquid level is between "MAX" and "MIN".

While reassemble, pay attention install sealing gasket③ in correct position and direction.

Step gently on the pedal constantly. Do not ride the motorcycle until the braking force is recovered.

CAUTION:

●Support the motorcycle well on flat ground before checking.

●Check regularly if the braking liquid surface is between "MAX" and "MIN"".

●If liquid surface is below "MIN", check the arrester status and confirm if the braking system is leaking.

●If the braking liquid is accidently swallowed, contact intoxication center or hospital immediately. If it gets into the eye, wash it away with clean water then see the doctor.

●Keep the braking liquid far away from children and pets.

●Flush the oil cup directly with high pressure water is prohibited.

●Mixing water, dust, impurity and liquid of silicic acid or petrol series into the braking liquid is prohibited. Otherwise, the braking system would be damaged.

●Brake liquid must be used in time after opening, and it is necessary to seal and prevent moisture during storage; it is recommended not to exceed one month. Inferior or damp brake oil can cause poor braking system and can cause brake failure if the impact is severe. Be sure to replace the brake fluid in a repair shop with brake fluid replacement equipment and technology to avoid air in the brake line.

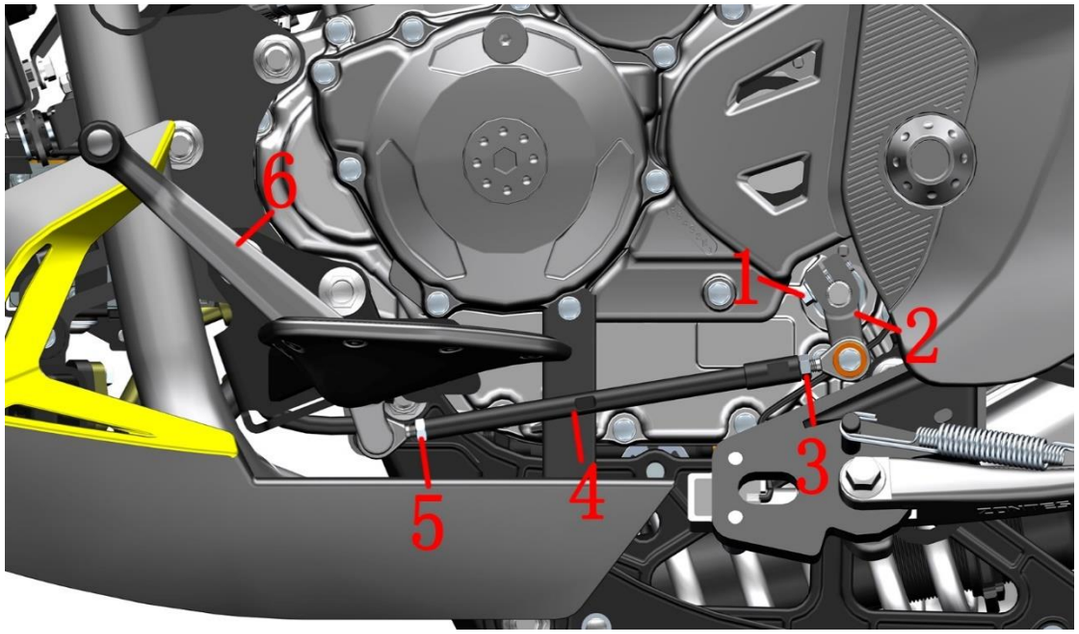

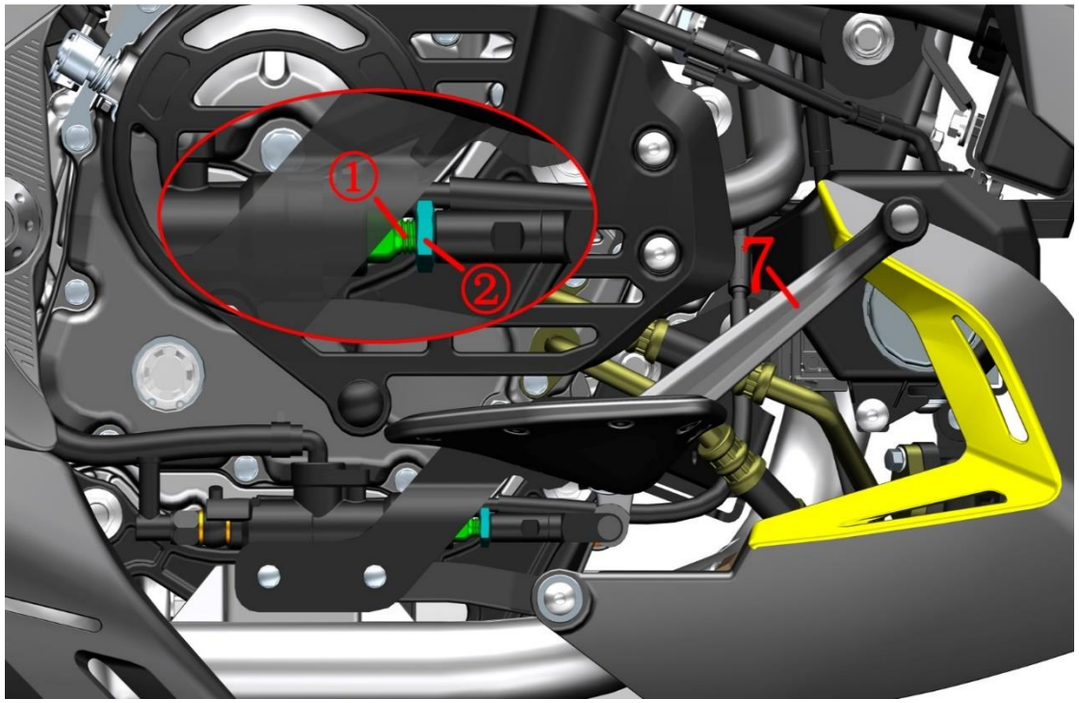

Fig.1 FOOT PEDAL COMPONENT		Adjust the hight of foot pedal	CHK ADJ	
NO.	PART NO.	PART NAME	QTY	CAUTION
1	1251100-061093	M6×22 Hex flang bolt thread level 8.8 (color Zinc)	1	
2	1271200-163000	ZT250-S shift lever spline rocker arm (dark gray)	1	
3	1250301-049093	GB6170M6 (environmental color)(5 pcs/after-sale)	1	
4	1274100-041000	ZT250-S shift lever adjusting screw ϕ10×150(Black Zinc)	1	
5	1250301-018093	GB6170 M6-LH(color Zinc)	1	
6	1274200-310000	ZT310-VX gear shifter Lever rocker Arm (Dark Grey)	1	
7	1274200-309000	ZT310-VX Brake pedal (Dark Grey)	1	

PROCEDURE:

●Adjust the height of gear shift rod

Use an 10# open-end wrench to loosen the nut (3) ,and nut (5) respectively. Use 8# open spanner to adjust the gear shift rod (4) adjustment bolt until the height becomes suitable. Then tighten the nuts. If the above-mentioned method can not adjust the gear shift rod to a satisfying position, take off bolt (1) and adjust gear shift rod spline of rocker arm (2) with a straight screwdriver by shoving a little bit the groove in the middle while dragging it out. Reassemble after the height is suitable. Pay attention to the aligning of the groove in the middle.

●Adjust the height of brake pedal

Use an 10# open-end wrench to loosen the nut②. Spin the adjustment rod bolt① and adjust the brake pedal(7) to 85mm up to the top pedal (8). Fix the adjustment rod bolt① and tighten Nut②.

CAUTION:

●Ensure the motorcycle is well supported during manipulation. Avoid falling accident.

●The height of gear shift rod should be ajusted to a suitable range. Otherwise the riding experience would be influenced.

●The height of brake pedal should be ajusted to a suitable range. Otherwise the durance of braking shoe and plate would be influenced. In severe case, ineffective braking is possible.

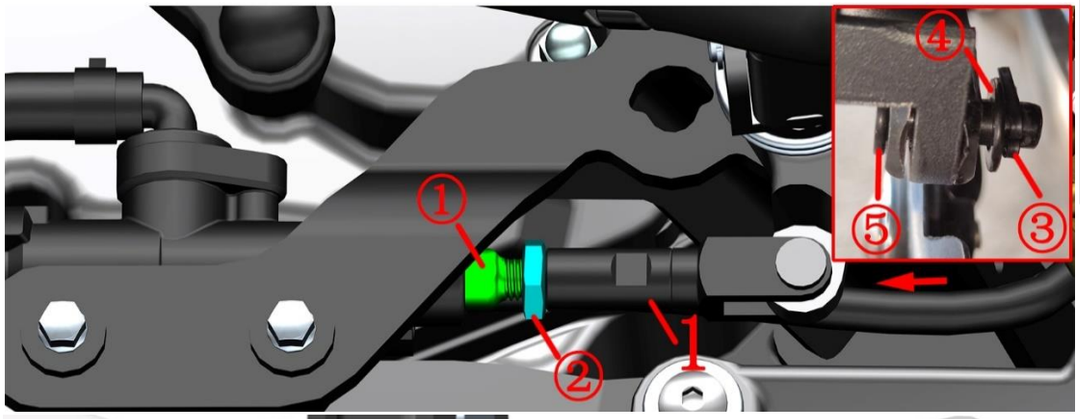

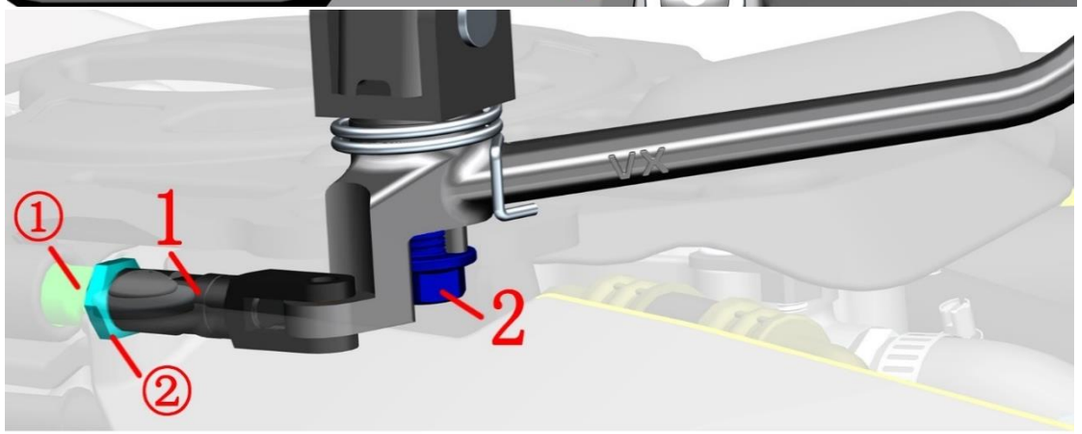

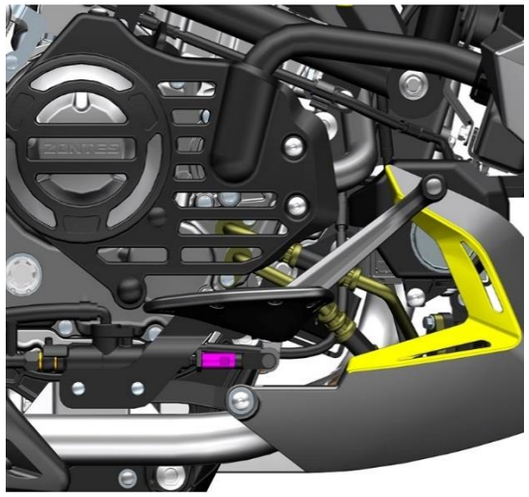

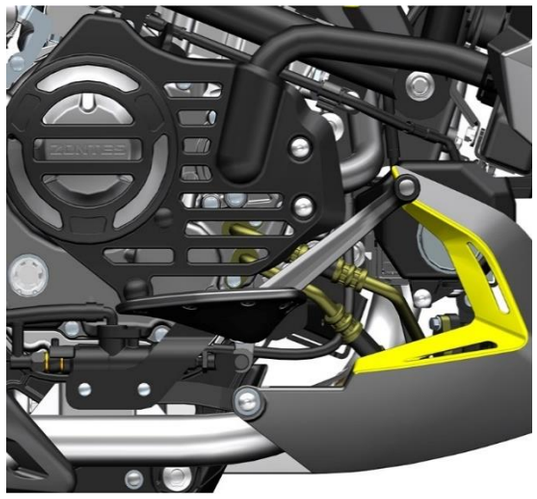

Fig.2 FOOT PEDAL COMPONENT		Front right pedal mounting position adjustment	CHK ADJ	
NO.	PART NO.	PART NAME	QTY	CAUTION
1	1100100-858000	ZT350-V1 rear brake main pump piston push rod extension rod	1	
2	1250105-278093	GB5789 M10×1.25×25 (10.9 grade environmental protection color)	1	

PROCEDURE:

●Front right foot position adjustment

Fix the screw ① with 10# open-ended wrench, loosen the nut ② with 14# open-ended wrench, and loosen the extension rod (1) with 10# open-ended wrench.

Break the split pin ③ straight and remove it. Remove the gasket ④ and remove the pin shaft ⑤. Remove the extension rod (1).

After grasping the front right foot pedal firmly, remove the bolt (2) from the back of the front foot pedal support with 14# ring wrench.

Install the foot pedal assembly back into a hole position, and assemble the U-joint on the adjusting screw ① without assembling the extension rod (1). Assemble according to the disassembly sequence. Adjust to the proper position according to the method of adjusting the brake pedal angle.

CAUTION:

●Ensure the motorcycle is well supported during manipulation. Avoid falling accident.

●The muffler should be completely cooled down before disassembly.

●The height of brake pedal should be ajusted to a suitable range. Otherwise the durance of braking shoe and plate would be influenced. In severe case, ineffective braking is possible.

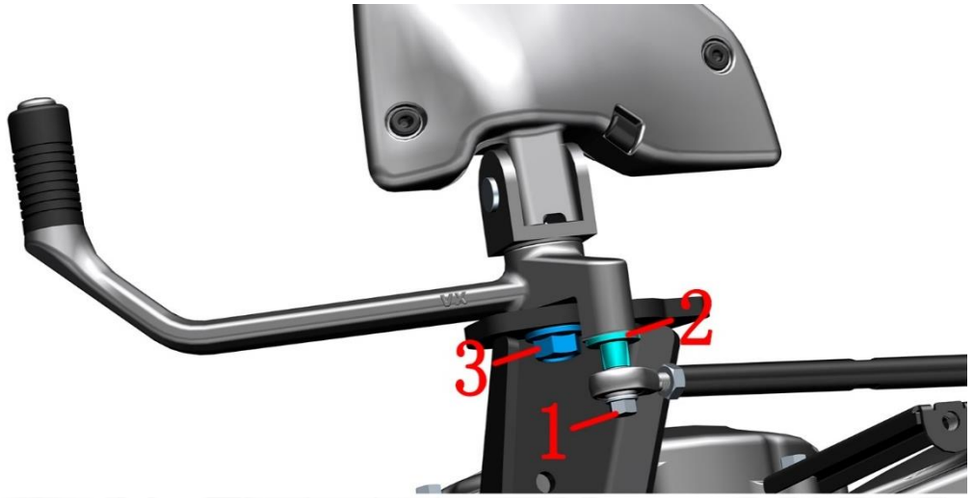

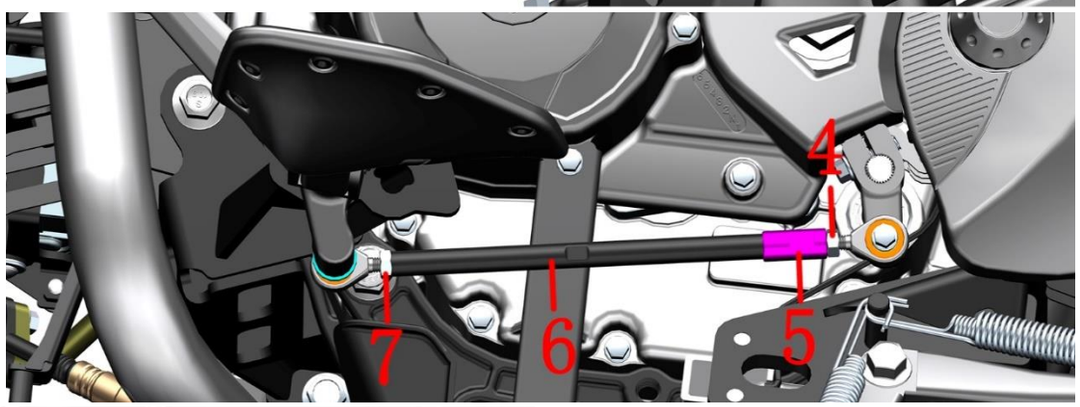

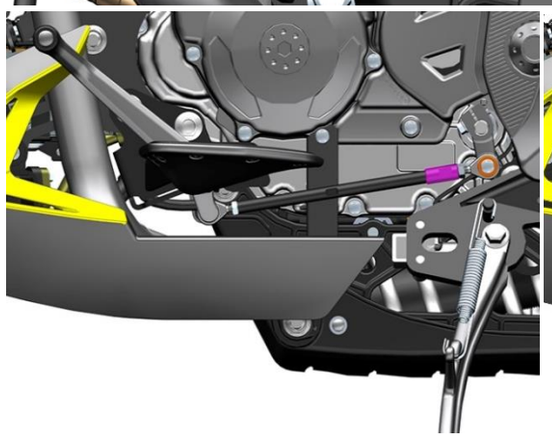

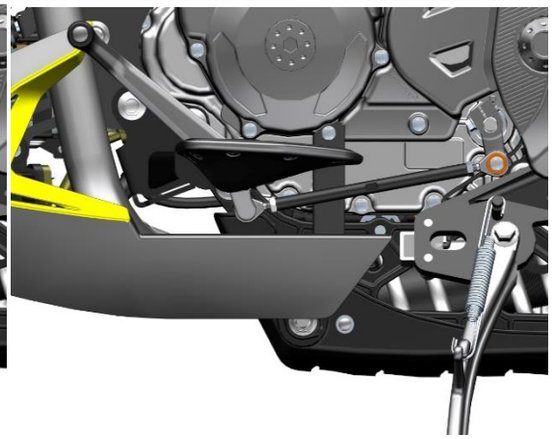

Fig.3 FOOT PEDAL COMPONENT		Front left pedal mounting position adjustment	CHK ADJ	
NO.	PART NO.	PART NAME	QTY	CAUTION
1	1251112-002093	M6×30 Hexagon flange bolts (color Zinc)	1	
2	1251700-059093	Flanging bushingϕ6.4×ϕ9×8 + ϕ18×2(environmental color)	1	
3	1250105-278093	GB5789 M10×1.25×25 (10.9 grade environmental protection color)	1	
4	1250301-049093	GB6170M6 (environmental color)(5 pcs/after-sale)	1	
5	1274200-035194	ZT310 front fender liner(Black Zinc)	1	
6	1274100-041000	ZT250-S shift lever adjusting screw ϕ10×150(Black Zinc)	1	
7	1250301-018093	GB6170 M6-LH(color Zinc)	1	

PROCEDURE:

●Move front left pedal back

Remove according to the steps of removing the shroud.

Use a 10# open-end wrench to loosen the nut (4), bushing (5), screw (6) and nut (7).

After grasping the shift lever firmly, use an 8# Torx wrench to remove the bolt(1)and remove the bush(2).

Use a 14# Torx wrench to remove the bolt(3) and install a hole in the rear of the front left pedal assembly.

Assemble the bolt(1), bushing(2)and bolt(3).

Remove the bushing(5), assemble the nut (4), screw (6) and nut (7), adjust the shift lever to the proper position, and then tighten the nut (4) and nut (7). There is no need for a bushing (5) to install a hole in the back.

CAUTION:

●Ensure the motorcycle is well supported during manipulation. Avoid falling accident.

●The height of gear shift rod should be ajusted to a suitable range. Otherwise the riding experience would be influenced.

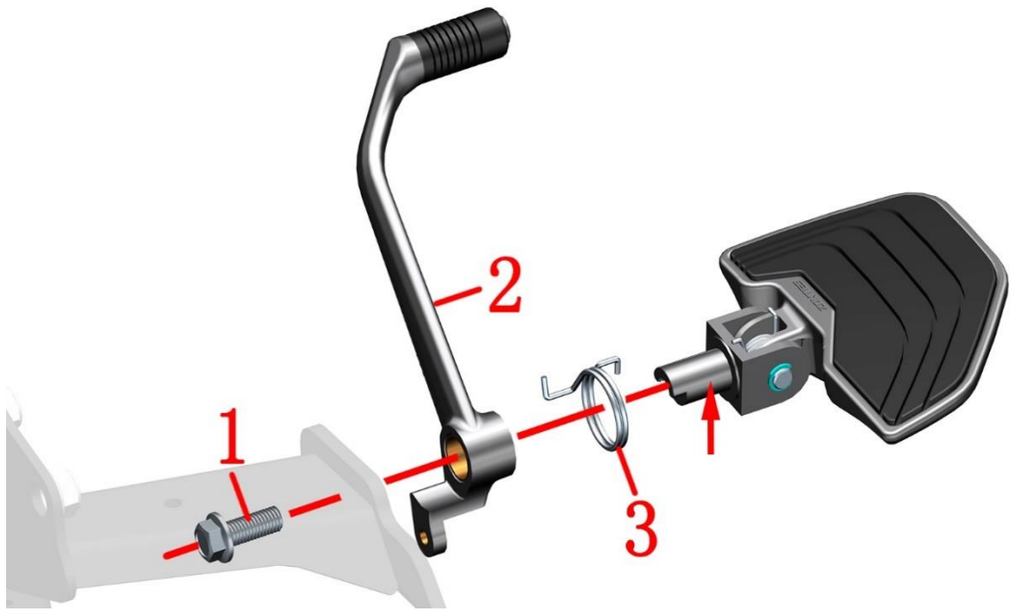

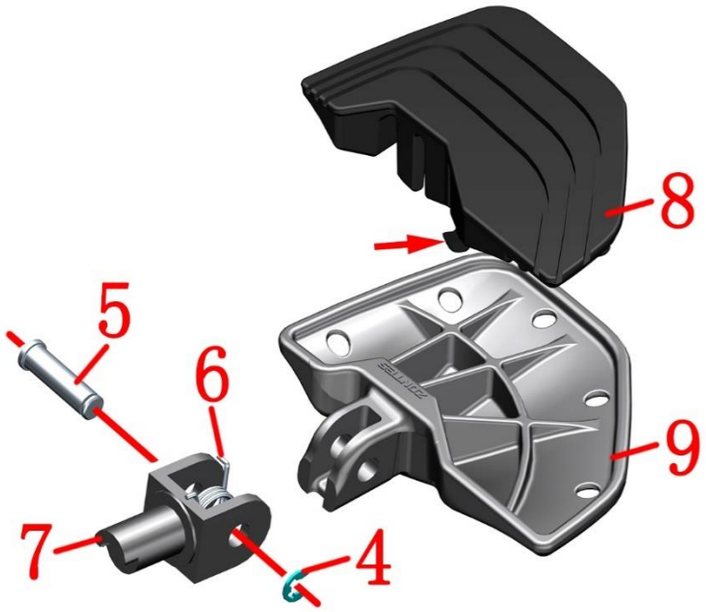

Fig.4 FOOT PEDAL COMPONENT		Front right footrest component	CHK ADJ	
NO.	PART NO.	PART NAME	QTY	CAUTION
1	1250105-278093	GB5789 M10×1.25×25 (10.9 grade environmental protection color)	1	
2	1274200-309000	ZT310-VX Brake pedal (Dark Grey)	1	
3	1260100-294000	ZT310-VX brake pedal spring(environmental color Zinc)	1	
4	1264100-006000	ZT250-S Pedal circlip	1	
5	1274100-012000	ZT250-S Pedal pin	1	
6	1264100-004000	ZT250-S front right foot pedal torsional spring	1	
7	1274300-068000	ZT350-VX front foot support (dark gray)	1	
8	1244200-115000	ZT310-VX rear right foot pedal rubber mat	1	
9	4064200-027051	ZT310-VX front right foot pedal (dark gray matte)	1	

PROCEDURE:

●Front right foot pedal assembly

Remove the U-joint and bolt (1) of the main pump of the rear disc brake according to the previous steps of "adjustment of the installation position of the front right foot pedal".

Remove the brake pedal (2), torsion spring (3) and pedal assembly.

●Right foot pedal assembly

Remove the circlip (4), remove the pin (5) and separate the foot support (7), torsion spring (6) and right foot pedal. Remove the rubber pad (8) from the right foot pedal (9). During reassembly, apply an appropriate amount of grease on the cylindrical surface indicated by the arrow in Figure 1 to reduce friction. When assembling the rubber pad (8), pay attention to that the limit boss at the arrow in Figure 2 should be assembled in place.

CAUTION:

●The boss of the support shall be aligned with the mounting hole on the pedal support before assembly.

●Pay attention to the installation direction of pedal torsion spring and brake pedal torsion spring.

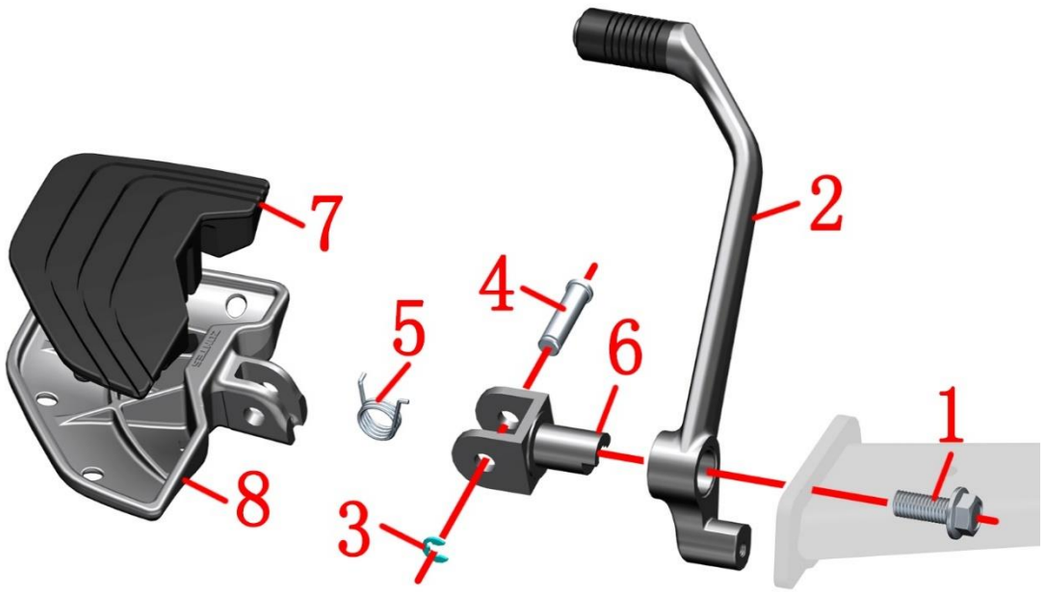

Fig.5 FOOT PEDAL COMPONENT		Front left footrest component	CHK ADJ	
NO.	PART NO.	PART NAME	QTY	CAUTION
1	1250105-278093	GB5789 M10×1.25×25 (10.9 grade environmental protection color)	1	
2	1274200-310000	ZT310-VX gear shifter Lever rocker Arm (Dark Grey)	1	
3	1264100-006000	ZT250-S Pedal circlip	1	
4	1274100-012000	ZT250-S Pedal pin	1	
5	1264100-003000	ZT250-S front left foot pedal torsional spring	1	
6	1274300-068000	ZT350-VX front foot support (dark gray)	1	
7	1244200-114000	ZT310-VX front left foot pedal rubber mat	1	

PROCEDURE:

● Front left foot pedal assembly

Remove the bolt, bushing and bolt (1) at the end of the shift lever according to the previous steps of "adjustment of the installation position of the front left foot pedal".

Remove the shift lever (2) and foot pedal assembly.

● left foot pedal assembly

Disassemble the left foot pedal assembly according to the previous disassembly steps of the right foot pedal assembly.

CAUTION:

● The boss of the support shall be aligned with the mounting hole on the pedal support before assembly

● The foot pedal torsion spring pay attention to the installation direction.

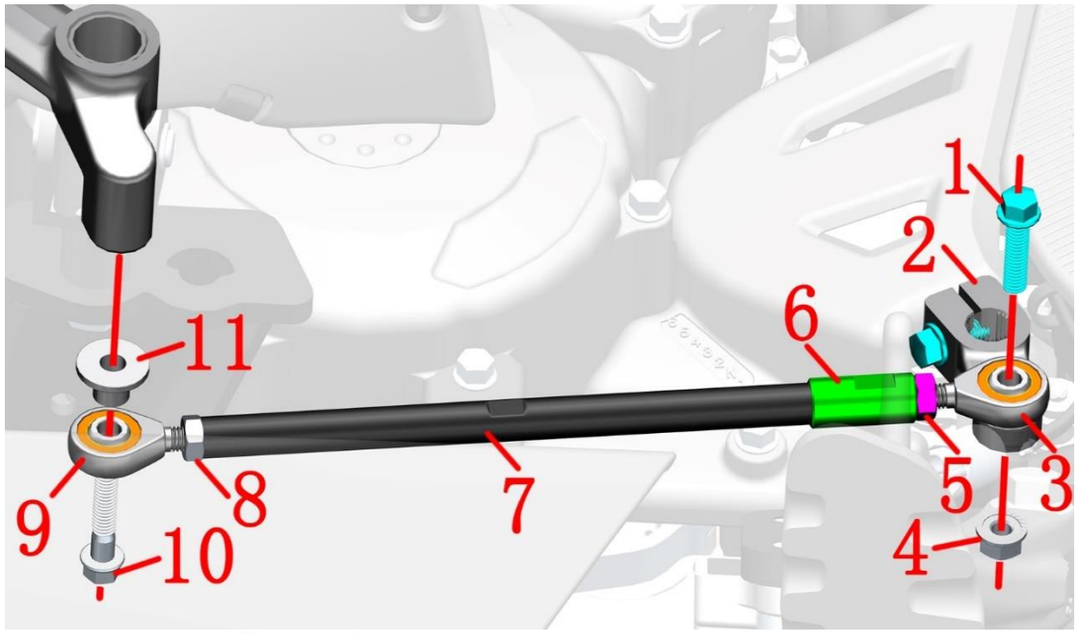

Fig.6 FOOT PEDAL COMPONENT		Shift lever assembly	CHK ADJ	
NO.	PART NO.	PART NAME	QTY	CAUTION
1	1251100-061093	M6×22 Hex flang bolt thread level 8.8 (color Zinc)	2	
2	1271200-163000	ZT250-S shift lever spline rocker arm (dark gray)	1	
3	1274100-042000	Miniature rod end ball bearing SAJK6C	1	
4	1250303-040093	GB6177.1M6 (environmental color)(5 pcs/after-sale)	1	
5	1250301-049093	GB6170M6 (environmental color)(5 pcs/after-sale)	1	
6	1274200-035194	ZT310 front fender liner(Black Zinc)	1	
7	1274100-041000	ZT250-S shift lever adjusting screw ϕ10×150(Black Zinc)	1	
8	1250301-018093	GB6170 M6-LH(color Zinc)	1	
9	1274100-043000	Miniature rod end ball bearing SALJK6C	1	
10	1251112-002093	M6×30 Hexagon flange bolts (color Zinc)	1	
11	1251700-059093	Flanging bushingϕ6.4×ϕ9×8 + ϕ18×2(environmental color)	1	

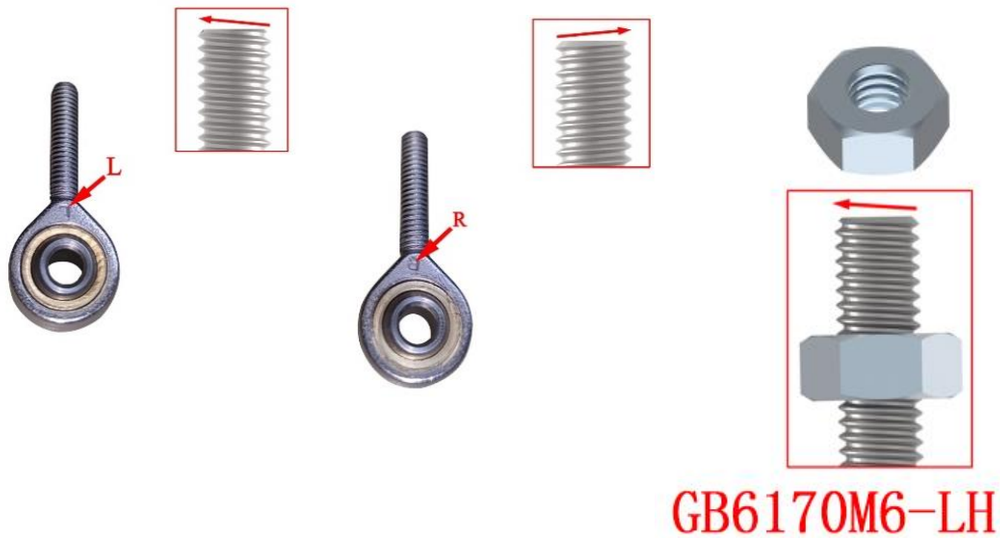

PROCEDURE:

●Gear shift rod assembly

Loosen nut(5) and nut(8) respectively with 10# open-ended wrench, rotate the groove position on adjusting screw(7) with 8# open-ended wrench, and loosen bushing (6) with 10# open-ended wrench. Use 10# sleeve to remove bolt(10) and bushing(11). Remove the bearing(9), nut(5), nut(8), bushing(6) and adjusting screw(7). Remove the bolt(1) at the engine shift shaft with an 8# ring wrench, and then pull out the spline rocker arm assembly with a slotted screwdriver. After fixing the bolt(1) with 8# sleeve, remove the nut(4) with 10# sleeve and remove the spline rocker arm(2) and bearing(2).

CAUTION:

●Support the motorcycle properly while disassembling in case it falls down.

●Pay attention to distinguishing the nuts at both ends of the knuckle bearing and the adjustment screw.

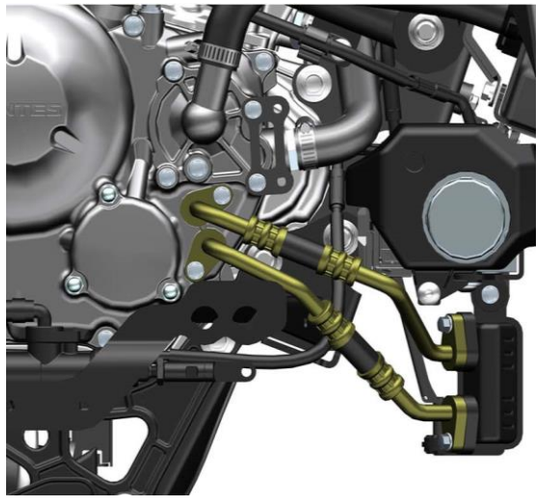

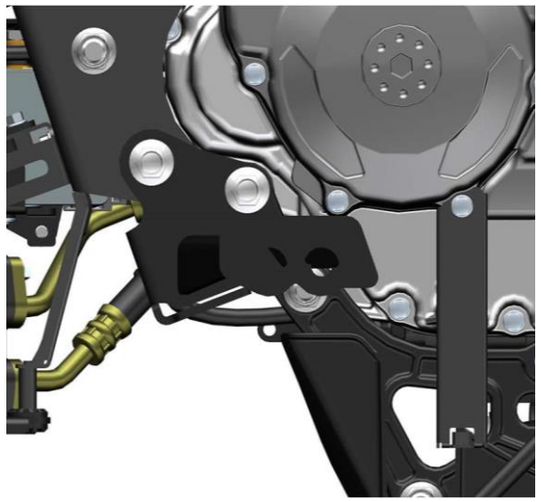

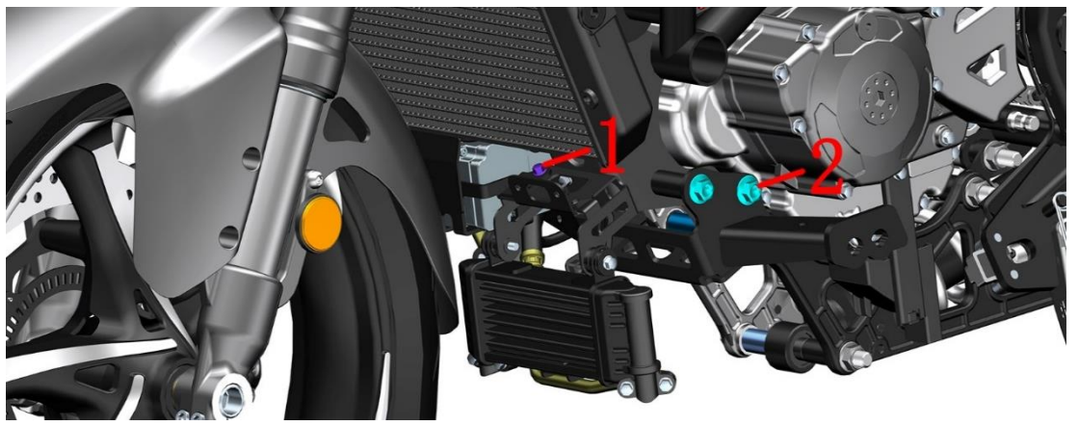

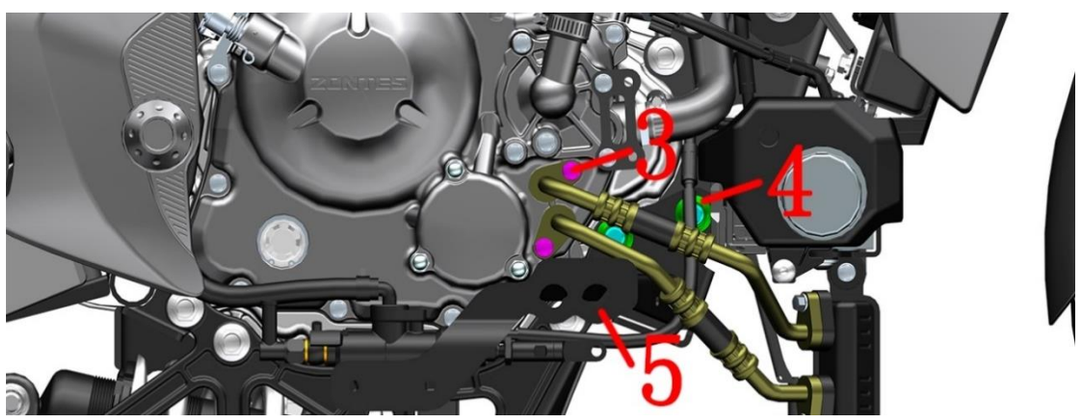

Fig.7 FOOT PEDAL COMPONENT		Front footrest bracket	CHK ADJ	
NO.	PART NO.	PART NAME	QTY	CAUTION
1	1251112-001093	M6×16 Hexagon flange bolts (color Zinc)	1	
2	1251112-020000	GB5187 non-standard bolt M12×1.25×153(10.9 garde/dacromet)	2	
3	1251100-061093	M6×22 Hex flang bolt thread level 8.8 (color Zinc)	2	
4	1250305-055091	GB6187.1 M12×1.25(White Zinc)(5 pcs/after-sale)	2	
5	4064300-027000	ZT350-VX front foot tread bracket	1	

PROCEDURE:

●Front footrest bracket

First, remove it by referring to the steps for removing the fairling and the right bracket of the fairling. Follow the steps to remove the muffler assembly to remove. Refer to the previous steps to remove the left and right pedal assemblies to remove. Remove it as shown in Figures 1 and 2.

Use an 8# sleeve to remove the bolts(1) above the right hydraulic control unit bracket. Tilt the vehicle to the left and fix it firmly, then use an 8# sleeve to remove the 2 bolts(3). Note that a small amount of oil will leak from the oil pipe at this time, and pull out the two oil pipes. Note that when there is an O-ring at the oil pipe, be sure to check whether it is damaged. It is recommended to replace a new 9.8×2.4 O-ring. After fixing the head of the bolt(2) with a 14# sleeve, remove the two nuts(4)with a 17# sleeve, hold the front pedal bracket (5)firmly, pull out the bolt(2) and remove the pedal bracket. Screw the 2 bolts(3) back to the engine to straighten the vehicle.

CAUTION:

●If too much oil flows out after removing the bolt (3), it needs to be replenished in time.

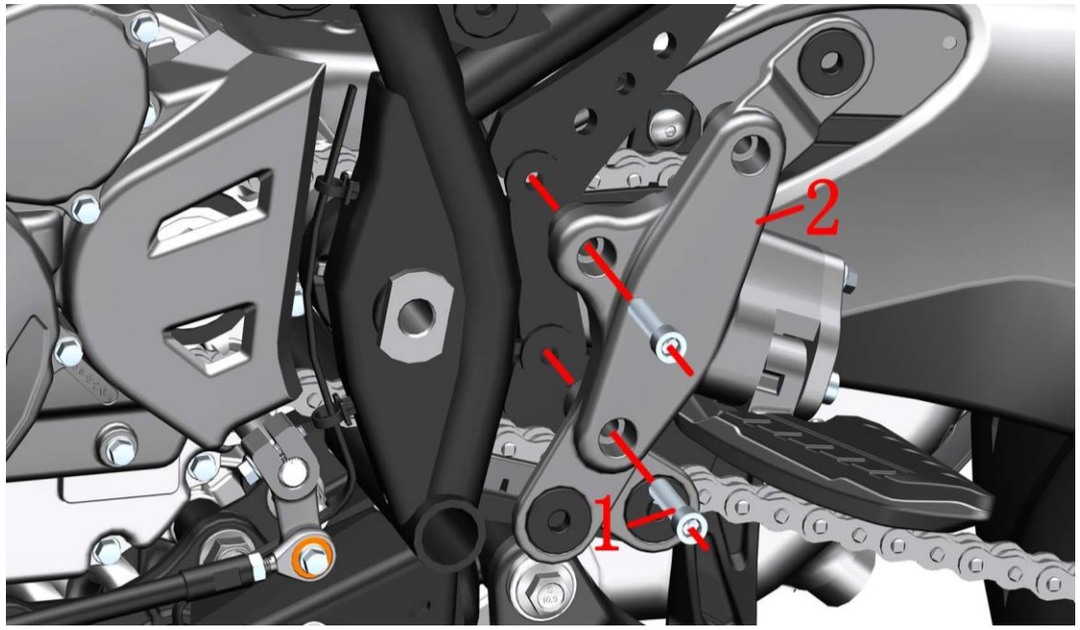

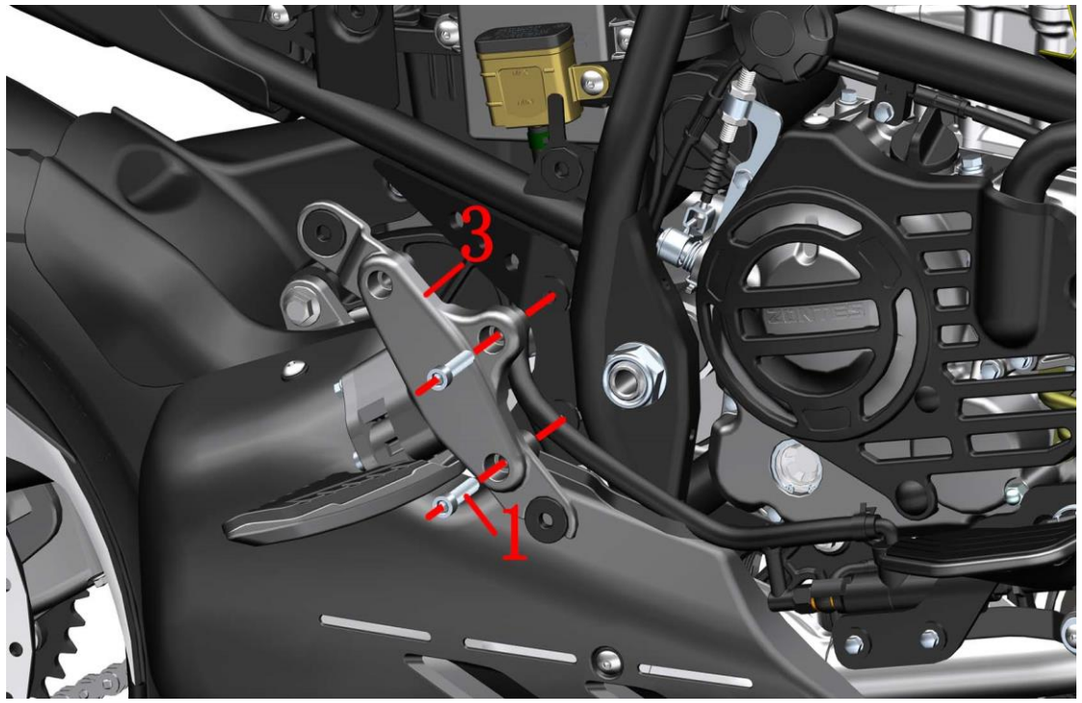

Fig.8 FOOT PEDAL COMPONENT		Rear pedal assembly	CHK ADJ	
NO.	PART NO.	PART NAME	QTY	CAUTION
1	1250205-023000	GB70.1 inner hexagonal M8×35 (color Zinc)	6	
2	4064300-025051	ZT350-V1 rear left foot pedal bracket assembly (dark gray matte)	1	
3	4064300-026051	ZT350-V1 rear right foot pedal bracket assembly (dark gray matte)	1	

PROCEDURE:

●Rear left pedal bracket assembly

Using 6# inner hexagon socket remove 2 pieces bolts (1) on the left side, take off the left pedal bracket assembly (2).

Using 6# inner hexagon socket remove 2 pieces bolts (1) on the right side , take off the right pedal bracket assembly (3).

CAUTION:

●The rear left and right foot pedal brackets are always equipped with the whole set,including the side cover round glue, pedal bracket, pedal etc.

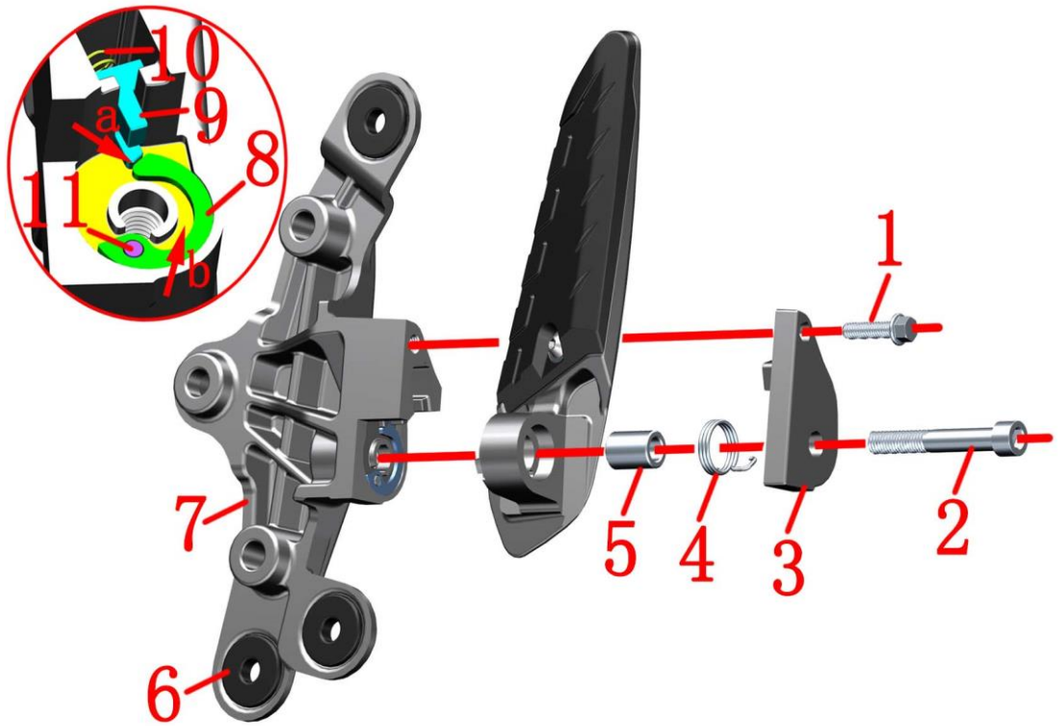

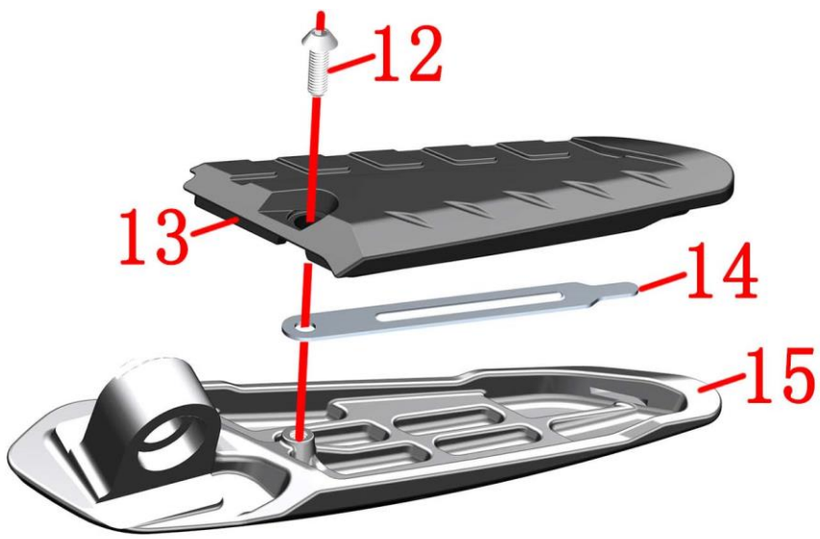

Fig.9 FOOT PEDAL COMPONENT		Rear right pedal bracket components（Old model）	CHK ADJ	
NO.	PART NO.	PART NAME	QTY	CAUTION
1	1251100-061093	M6×22 Hex flang bolt thread level 8.8 (color Zinc)	1	
2	1250205-043093	GB70.1M8×55(environmental color)	1	
3	4064200-016051	ZT310-V rear right foot pedal cover (dark gray matte)	1	
4	1260100-353000	ZT310-V rear right foot on torsion spring (extend)	1	
5	1251700-118000	Bushing Φ 13 x Φ 8 x 18.1	1	
6	1244100-138000	ZT250-S Side cover round rubber(5 pcs/after-sale)	2	
7	4064300-024051	ZT310-V1 rear right foot pedal bracket (dark gray matte)	1	
8	1274200-148000	ZT310-V rear foot pad	1	
9	1032142-050000	ZT310-V rear right pedal slider	1	
10	1260100-223000	ZT310-V rear pedal spring	1	
11	1274200-286000	ZT310-V rear foot tip pin	1	
12	1250205-038000	GB70.2M5×12 (stainless steel)	1	
13	1244200-065000	ZT310-V rear right foot rubber cover	1	
14	1274200-147000	ZT310-V rear foot rubber cover mounting piece	1	
15	4064200-015051	ZT310-V rear right foot pedal (dark gray matte)	1	

PROCEDURE:

●Rear right pedal bracket assembly

Take off 2 pieces side cover round glue (6) from the right pedal bracket(7).

Use 8# sleeve to remove bolt (1); use 6# inner hexagon to remove bolt (2), take off the cover plate (3).

Remove the bolt (1)and (2)take off the cover (3).

Take off the pedal torsion (4) and bushing (5).

Take off the rear pedal component

Take off the pedal top film (8) and footrest top plate hinge pin (11).

Take off the pedal slider (9) and spring (10).

●Rear right pedal

Using 3# inner hexagon socket remove the bolt (12)， take off the pedal (15).

The rubber sleeve fixing piece (14) is withdrawn from the pedal rubber sleeve (13).

CAUTION:

●When reassembling, apply a proper amount of grease to the blue surface indicated by arrow "b". Note that the slider top sheet needs to hold the slider.

●Reassembly is to tighten the bolt (1) first, then pre-tighten the bolt (2). The bolt (2) head should be coated with a proper amount of thread fastening glue. After tightening the bolt (2), it is necessary to confirm whether the pedal rotation is flexible or not.

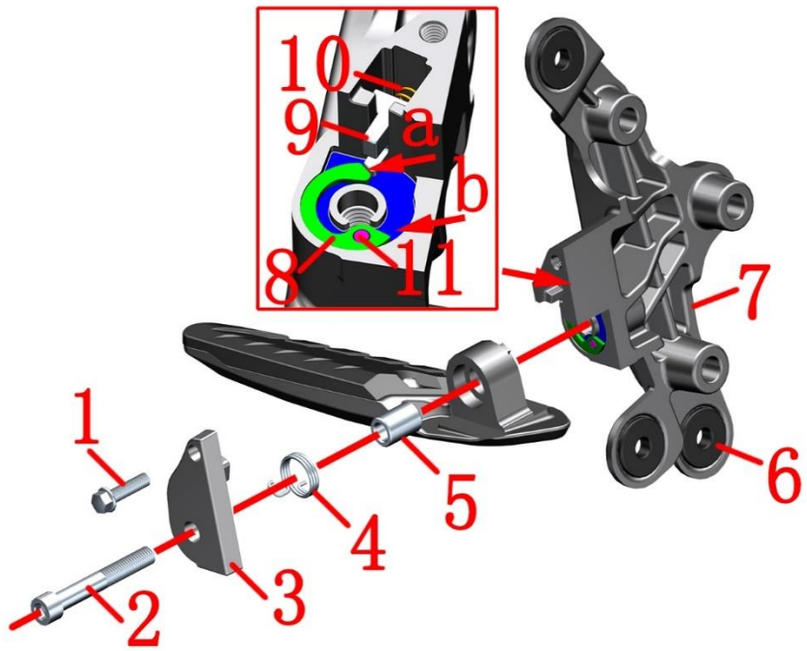

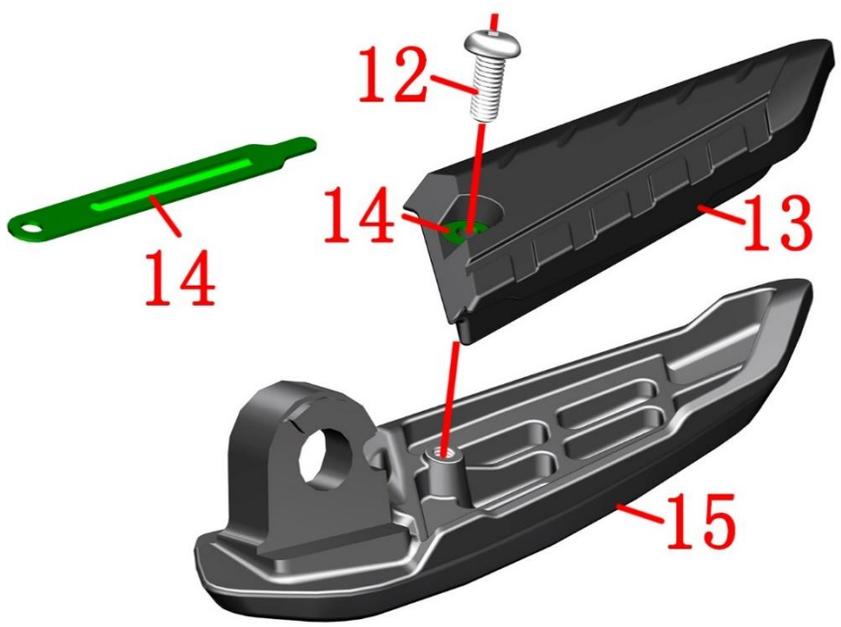

Fig.10 FOOT PEDAL COMPONENT		Rear left pedal bracket components（Old model）	CHK ADJ	
NO.	PART NO.	PART NAME	QTY	CAUTION
1	1251100-061093	M6×22 Hex flang bolt thread level 8.8 (color Zinc)	1	
2	1250205-043093	GB70.1M8×55(environmental color)	1	
3	4064200-021051	ZT310-V rear left foot pedal cover (dark gray matte)	1	
4	1260100-352000	ZT310-V rear left foot on torsion spring (extend)	1	
5	1251700-118000	Bushing Φ 13 x Φ 8 x 18.1	1	
6	1244100-138000	ZT250-S Side cover round rubber(5 pcs/after-sale)	3	
7	4064300-023051	ZT310-V1 rear left foot pedal bracket (dark gray matte)	1	
8	1274200-148000	ZT310-V rear foot pad	1	
9	1032142-049000	ZT310-V rear left pedal slider	1	
10	1260100-223000	ZT310-V rear pedal spring	1	
11	1274200-286000	ZT310-V rear foot tip pin	1	
12	1250205-038000	GB70.2M5×12 (stainless steel)	1	
13	1244200-064000	ZT310-V rear left foot steps the rubber cover	1	
14	1274200-147000	ZT310-V rear foot rubber cover mounting piece	1	
15	4064200-020051	ZT310-V rear left foot pedal (dark gray matte)	1	

PROCEDURE:

●Rear left pedal bracket assembly

Take off 3 pieces side cover round glues (6) from the right pedal bracket (7).

Use 8# sleeve to remove bolt (1); Use 6# inner hexagon to remove bolt (2), and take off the cover (3).

Take off the pedal torsion spring (4) and bushing (5).

Take off the rear pedal component.

Take off the pedal top film (8) and footrest top plate hinge pin (11).

Take off the pedal slider (9)and spring (10).。

●Rear left pedal

Using 3# inner hexagon socket remove the bolt (12)， and take off the pedal (15).

The rubber sleeve fixing piece (14) is withdrawn from the pedal rubber sleeve (13)

CAUTION:

●When reassembling, apply a proper amount of grease to the yellow surface indicated by arrow b. Note that the slider top sheet needs to be held against the slider as indicated by arrow a.

●Reassembly is to tighten the bolt (1) first, then pre-tighten the bolt (2). The bolt (2) head should be coated with a proper amount of thread fastening glue. After tightening the bolt (2), it is necessary to confirm whether the pedal rotation is flexible or not.

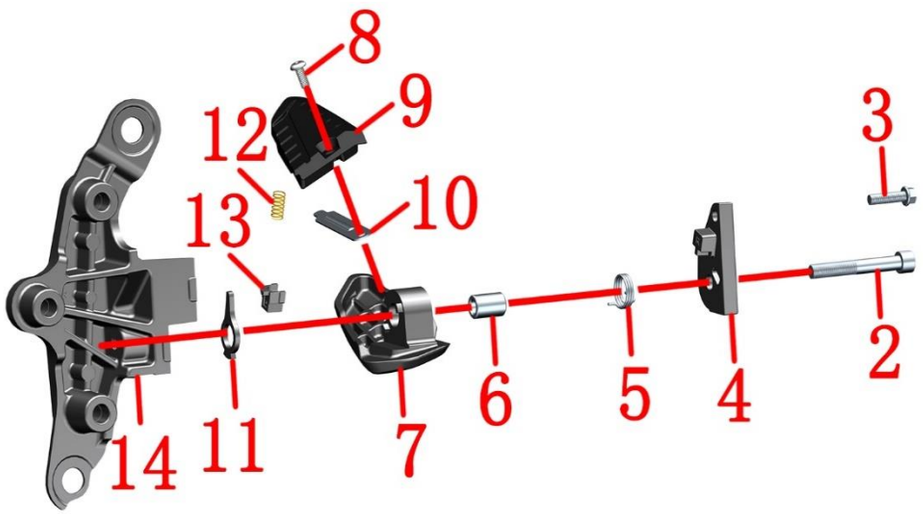

Fig.11 FOOT PEDAL COMPONENT		Rear right pedal bracket components（New model）	CHK ADJ	
NO.	PART NO.	PART NAME	QTY	CAUTION
1	1244100-138000	ZT250-S Side cover round rubber(5 pcs/after-sale)	2	
2	1250205-043093	GB70.1M8×55(environmental color)	1	
3	1251100-061093	M6×22 Hex flang bolt thread level 8.8 (color Zinc)	1	
4	4064200-016051	ZT310-V rear right foot pedal cover (dark gray matte)	1	
5	1260100-353000	ZT310-V rear right foot on torsion spring (extend)	1	
6	1251700-118000	Bushing Φ 13 x Φ 8 x 18.1	1	
7	4064300-056051	ZT310-V rear right foot pedal (dark gray matte /improved)	1	
8	1250205-038000	GB70.2M5×12 (stainless steel)	1	
9	1244200-065000	ZT310-V rear right foot rubber cover	1	
10	1274200-147000	ZT310-V rear foot rubber cover mounting piece	1	
11	1020543-038000	ZT310-V rear foot pad (improved)	1	
12	1260100-223000	ZT310-V rear pedal spring	1	
13	1020543-037000	ZT310-V rear right pedal slider (improved)	1	
14	4064300-052051	ZT310-V1 rear right foot pedal bracket (dark gray matte/improved)	1	

PROCEDURE:

●Rear right pedal bracket assembly

Take off 2 pieces side cover round glue (1) from the right pedal bracket(14).

Use 8# sleeve to remove bolt (3); use 6# inner hexagon to remove bolt (2), take off the cover plate (4).

Take off the pedal torsion (4) and bushing (6).

Take off the rear pedal component

Take off the pedal top film (11) and the pedal slider (13)and spring (12).

●Rear right pedal

Using 3# inner hexagon socket remove the bolt (8)， take off the pedal(7).

The rubber sleeve fixing piece (10) is withdrawn from the pedal rubber sleeve (9).

CAUTION:

●When reassembling, apply a proper amount of grease to the food pad(11). Note that the slider top sheet needs to hold the slider.

●Reassembly is to tighten the bolt (3) first, then pre-tighten the bolt (2). The bolt (2) head should be coated with a proper amount of thread fastening glue. After tightening the bolt (2), it is necessary to confirm whether the pedal rotation is flexible or not.

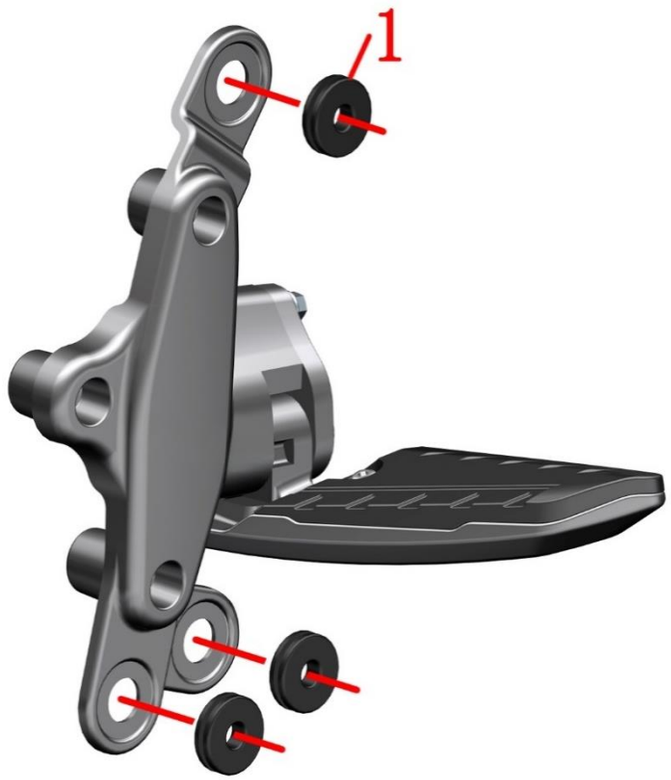

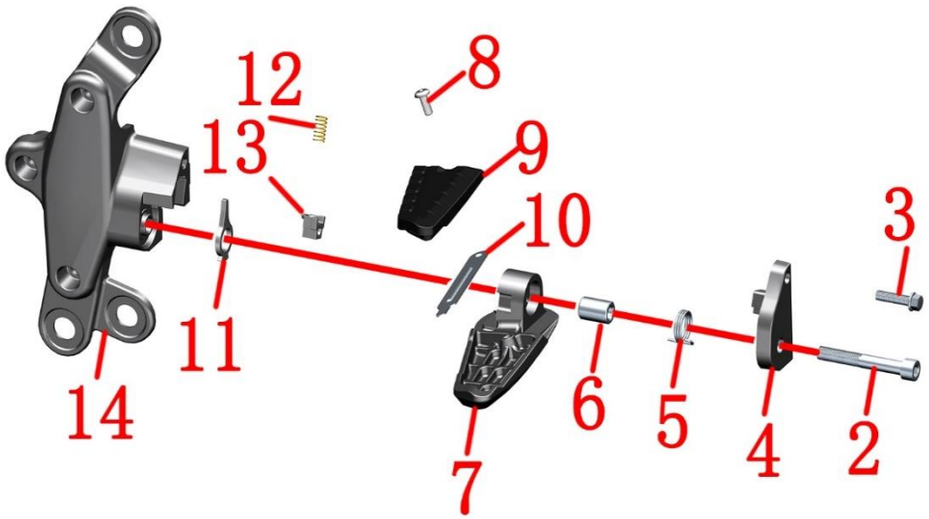

Fig.12 FOOT PEDAL COMPONENT		Rear left pedal bracket components（New model）	CHK ADJ	
NO.	PART NO.	PART NAME	QTY	CAUTION
1	1244100-138000	ZT250-S Side cover round rubber(5 pcs/after-sale)	3	
2	1250205-043093	GB70.1M8×55(environmental color)	1	
3	1251100-061093	M6×22 Hex flang bolt thread level 8.8 (color Zinc)	1	
4	4064200-021051	ZT310-V rear left foot pedal cover (dark gray matte)	1	
5	1260100-352000	ZT310-V rear left foot on torsion spring (extend)	1	
6	1251700-118000	Bushing Φ 13 x Φ 8 x 18.1	1	
7	4064300-055051	ZT310-V rear left foot pedal (dark gray matte/improved)	1	
8	1250205-038000	GB70.2M5×12 (stainless steel)	1	
9	1244200-064000	ZT310-V rear left foot steps the rubber cover	1	
10	1274200-147000	ZT310-V rear foot rubber cover mounting piece	1	
11	1020543-038000	ZT310-V rear foot pad (improved)	1	
12	1260100-223000	ZT310-V rear pedal spring	1	
13	1020543-036000	ZT310-V rear left pedal slider (improved)	1	
14	4064300-051051	ZT310-V1 rear left foot pedal bracket (dark gray matte/improved)	1	

PROCEDURE:

●Rear left pedal bracket assembly

Take off 2 pieces side cover round glue (1) from the left pedal bracket(14).

Use 8# sleeve to remove bolt (3); use 6# inner hexagon to remove bolt (2), take off the cover plate (4).

Take off the pedal torsion (4) and bushing (6).

Take off the rear pedal component

Take off the pedal top film (11) and the pedal slider (13)and spring (12).

●Rear left pedal

Using 3# inner hexagon socket remove the bolt (8)， take off the pedal(7).

The rubber sleeve fixing piece (10) is withdrawn from the pedal rubber sleeve (9).

CAUTION:

●When reassembling, apply a proper amount of grease to the food pad(11). Note that the slider top sheet needs to hold the slider.

●Reassembly is to tighten the bolt (3) first, then pre-tighten the bolt (2). The bolt (2) head should be coated with a proper amount of thread fastening glue. After tightening the bolt (2), it is necessary to confirm whether the pedal rotation is flexible or not.

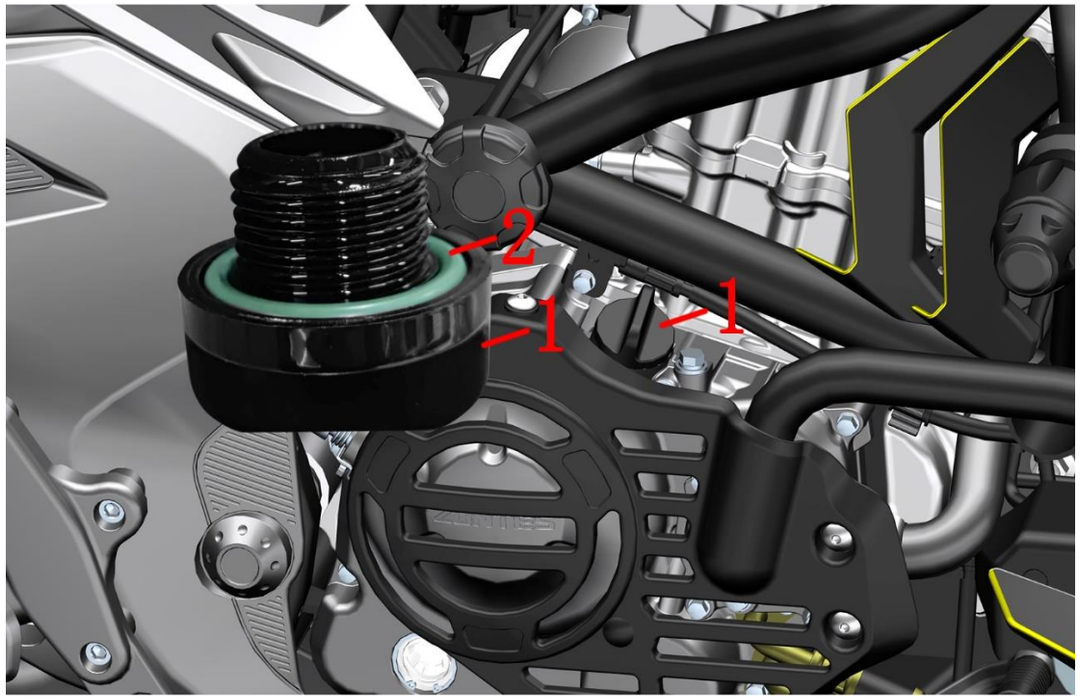

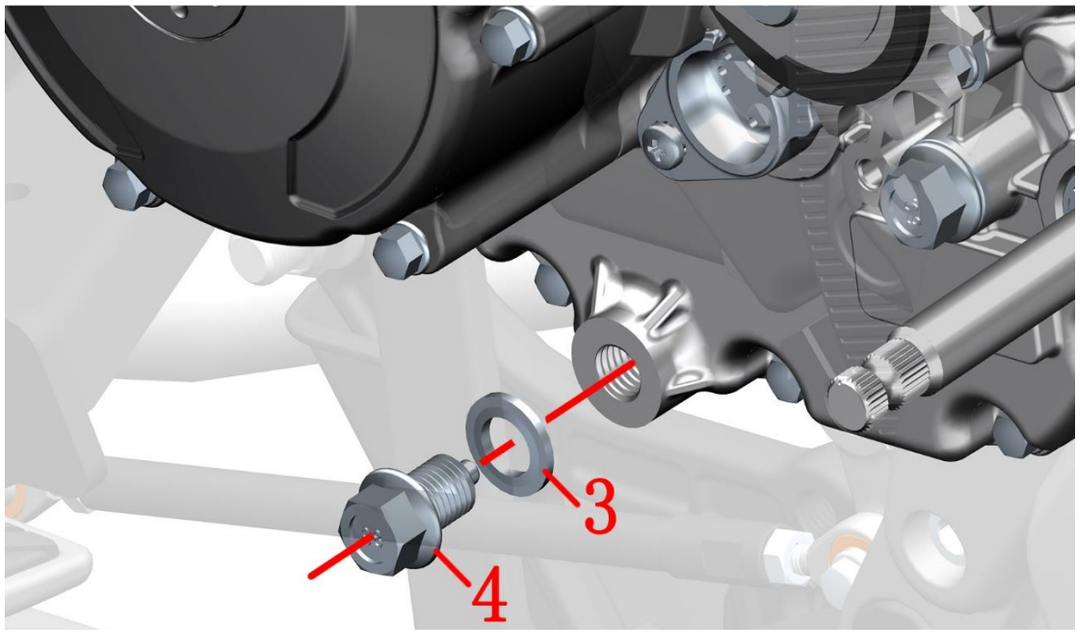

Fig.1 COOLING SYSTEM COMPONENT		Change engine oil	CHK ADJ	
NO.	PART NO.	PART NAME	QTY	CAUTION
1	1051161-012000	M24×2 oil filler plug	1	
2	1051461-007000	25×3.1 Hydrogenated nitrile rubber O-ring	1	
3	1244100-033000	Combined sealing gasket 12×ϕ20×2	1	
4	1251100-066093	M12×1.5×15 ablassschraube (color Zinc)	1	24±4N.m

PROCEDURE:

●Drain oil

Park the motorcycle with side stand on flat ground.Place holder to collect wasted engine oil under the oil drain bolt.

Use a 14# sleeve to remove the bolt (4) on the left side of the engine and remove the combined gasket (3).

Rotate counterclockwise and unscrew the oil filler plug(1).

Wipe off the dirty oil with clean nonwovens. Be sure that the surface of oil draining bolt and sealing gasket are not scratched and has no inpurity before reassembling. Torque on bolt is 24±4N.m. Too strong will damage the thread. Too week will cause leakage of oil.

●Change engine oil

Add from opening on right crankcase of engine 1.6L(1.7L if oil filter is changed) new engine oil of SAE 10W-50/10W-40 with API SM degree or higher. Then tighten the oil filler plug(1),pay attention to check the O-ring (2) is damaged or aging,and do not leak.

Start the engine and test it under different rotation speed for 2 minuts. Check if the engine oil leaks.

Idle for 5 minutes and then shut down for 3 minutes. Observe the oil level through the oil window. If the liquid level is lower than the minimum oil level mark, add new oil to the maximum oil level mark. Check again for leakage according to the above method.

CAUTION:

●Disassembling the cooling system while the motorcycle is hot is prohibited. Wait until the engine and muffler cool down thoroughly for the manipulation.

●Wasted engine oil should be collected and hand over to qualified facilities for further treatment. Do not pour the oil anywhere and avoid pollution of environment and water source.

●Changing the O-ring(2) and the sealing gasket(3) every time when changing the engine oil is suggested.

●As the crankshaft connection rot has bearing bush, whild changing the engine oil, make sure the engine has at least 1L before starting the engine. If not, the bearing bush can be damaged or the crankshaft can be seized.

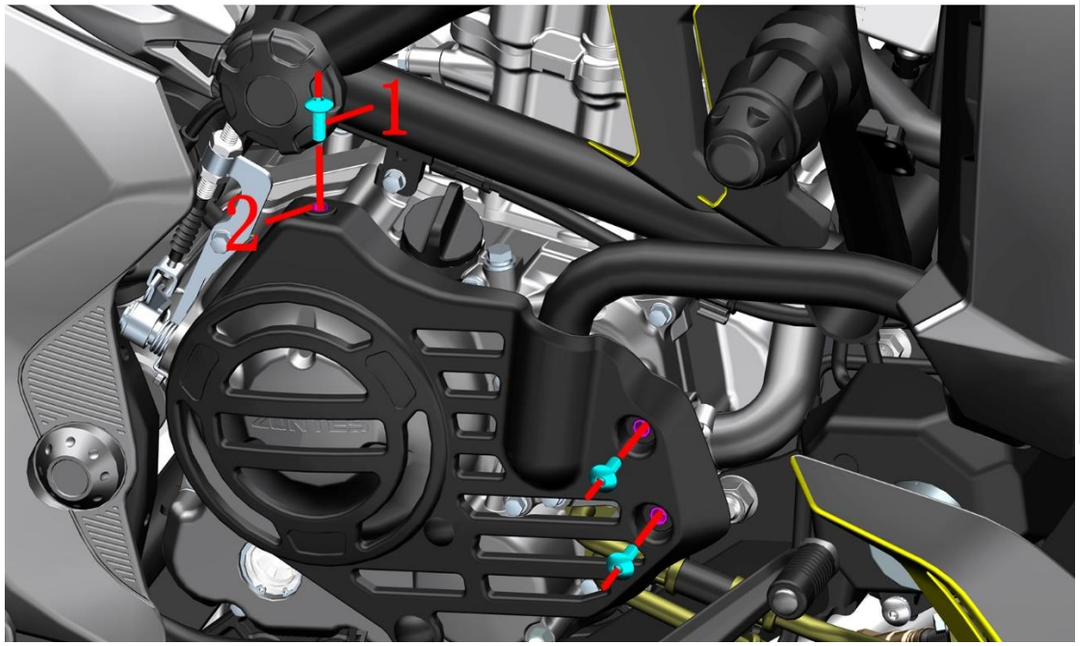

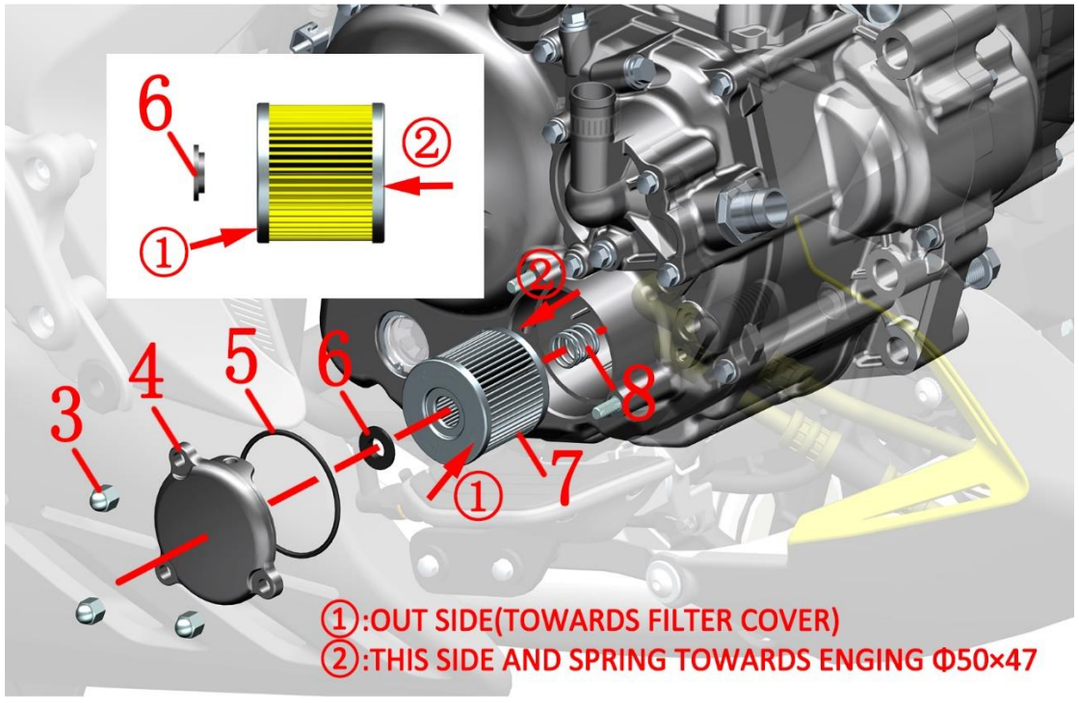

Fig.2 COOLING SYSTEM COMPONENT		Change engine oil filter	CHK ADJ	
NO.	PART NO.	PART NAME	QTY	CAUTION
1	1251100-102000	Non-standard bolt M6×16 (304 stainless steel)	3	
2	1274100-018000	ZT250-S Anti-hot plate sleeve, muffler	3	
3	1251300-207000	Non-standard cover type 9 degree nut M6×13 (environmental color Zinc)(5 pcs/after-sale)	3	
4	4050454-014051	ZT180MN fine filter cover A (dark gray)	1	
5	1051454-020000	55×2.5 Hydrogenated nitrile rubber O-ring	1	after-sale
6	1051454-005000	ZT180MN Oil filter sealing ring	1	
7	4134300-001000	ZT184MP fine filter sealing assembly(carton packaging)	1	【1】
8	1050853-009000	Φ16.4×17×1.6 filter spring	1	

PROCEDURE:

● Engine decorative cover assembly

Using 4# inner hexagon socket remove 3 pieces bolts (1) respectively,after taking off the bushing (2),and take off the engine decorative cover assembly.

●Change engine oil filter

Place holder to collect wasted engine oil under right crankcase cover.

Disassemble nut (3) with 10# sleeve. Rotate slightly engine oil refined filter cover (4) and take it off when it is loosen.

Take off the O-ring (5) and the seal ring (6). Change engine oil filter (7).

Change the O-ring (5) and the seal ring (6) along with engine oil filter assembly.

When reassembling, pleas check carefully if the spring (8), seal ring (6) are well installed. Engine oil filter can not be turned over when assembling(as shown in the left figure, ① face the fine filter cover; ② face the engine).

CAUTION:

●Ensure every component is well assembled.

●To change engine oil filter and seal ring(5) at the same time is suggested.

●Engine oil filter can not be turned over when assembling.

● Note that the seal ring (6) is facing the fine filter with the “OUT SIDE (TOWARDS FILTER COVER)” side. It is forbidden to install reverse or leak.

●【1】The ZT180 refined filter seal component already included oil filter、55×2.5 O-ring (5) and ZT180MN Engine oil refined filter seal ring(6) .

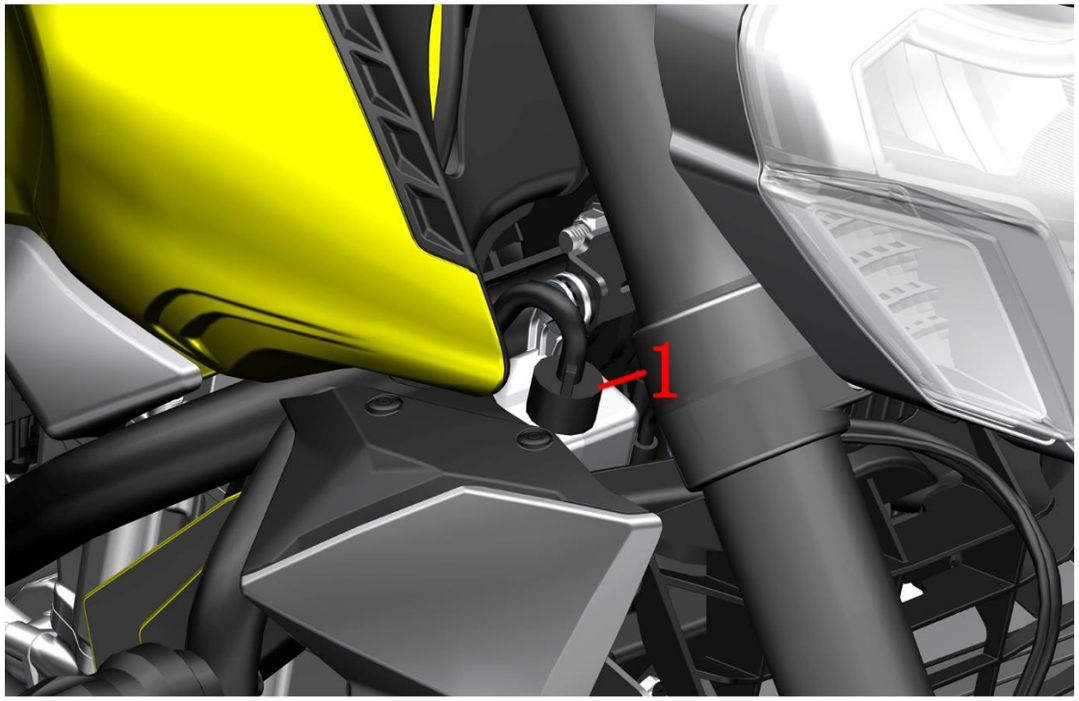

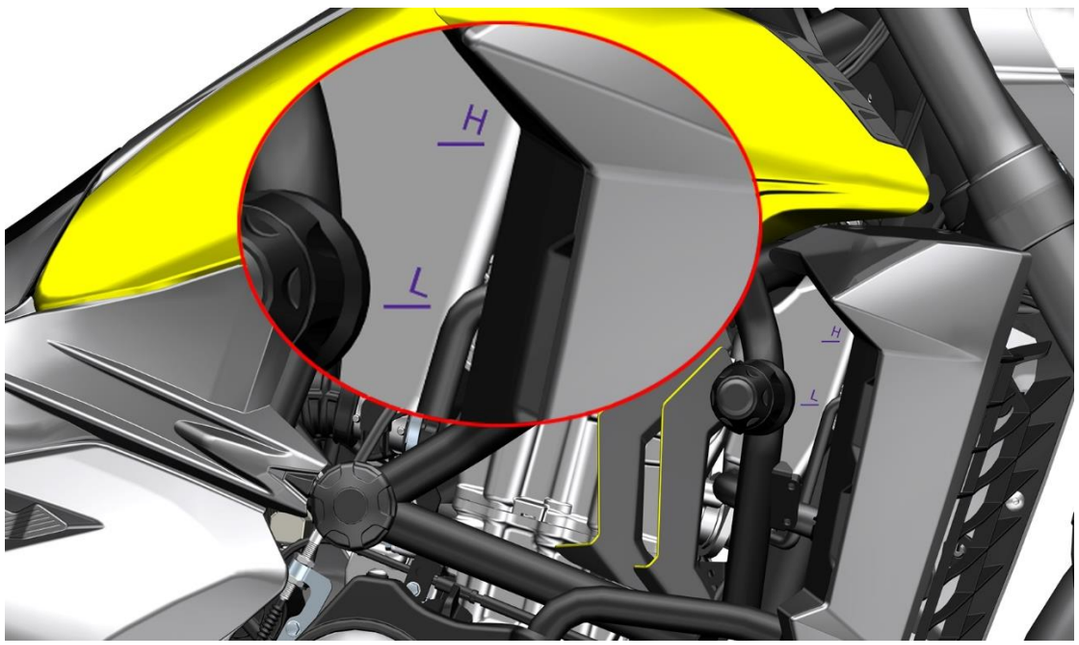

Fig.3 COOLING SYSTEM COMPONENT		Add coolant	CHK ADJ	
NO.	PART NO.	PART NAME	QTY	CAUTION
1	1224300-030000	ZT350-V sub-water tank	1	

PROCEDURE:

●Add coolant

When the engine is completely cooled, the vehicle can be straightened to accurately check the liquid level. If it is lower than the "L" line, the coolant should be replenished in time. If the auxiliary tank has no or only a small amount of coolant, check the cooling system first, and remove the leak before adding it.

Park the vehicle with the side brackets; turn the direction to the right and turn to the bottom.

Open the lid of the sub tank (1) and add a small amount of coolant each time with a funnel. It is appropriate to reach the position of the F line when the liquid level of the coolant is used to support the vehicle.

CAUTION:

●Check regularly the cooling liquid surface. It should never be lower than "L" line.

●Change cooling liquid every two years is suggested.

●Swallowing or inhaling cooling liquid would harm human body. Clean thoroughly the hands, face or explosing skin every time after adding cooling liquid. If cooling liquid is swalled by accident, please contact toxication center or hosipital. If it's inhaled, please move to open air. If it's spilt to the eye, clean it with big quantity of clean water and see doctor in time. Be sure the cooling liquid is far away from children or pets.

●Engine cooling liquid must be suitable for aluminum radiator. The basic should be glycol. Cooling liquid should be mixture of distilled water and concentrated cooling liquid under certain proportion. Be sure to choose cooling liquid which is suitable for your local extreamly low temperature. The freezing point should be lower than the local lowest temperature. Distilled water is the only kind of water acceptable. Other kind of water might cause corrosion to engine cooling system or other more severe problems.

●Total volume of cooling liquid is 1580ml.

●Cooling liquid might damage the coating of motorcycle. Be careful while adding. If it is spilt in small quantity, please clean it immediately with soft cloth.

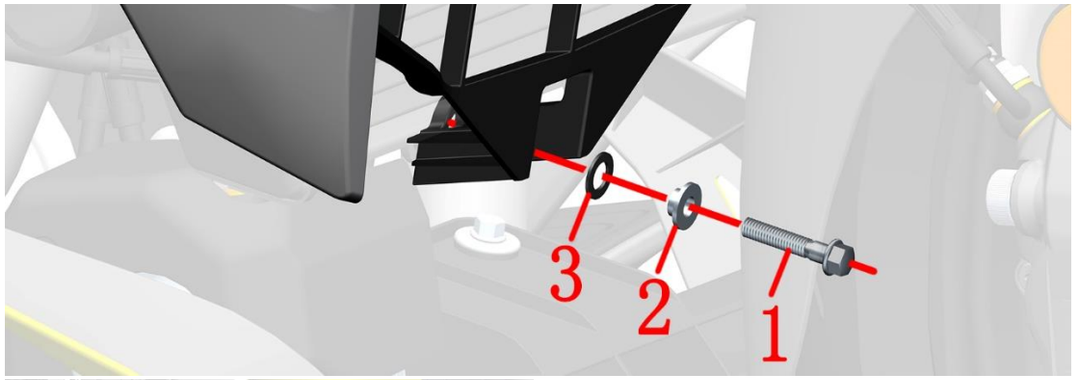

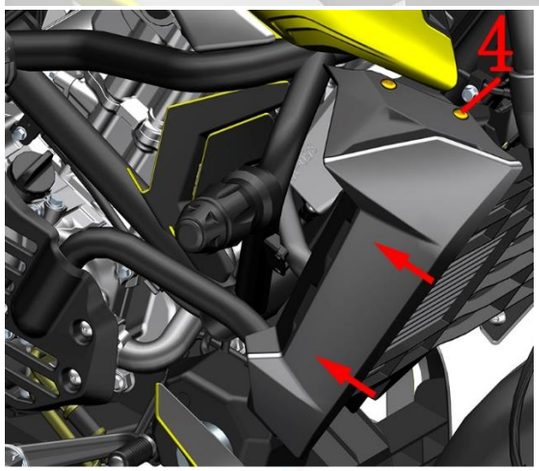

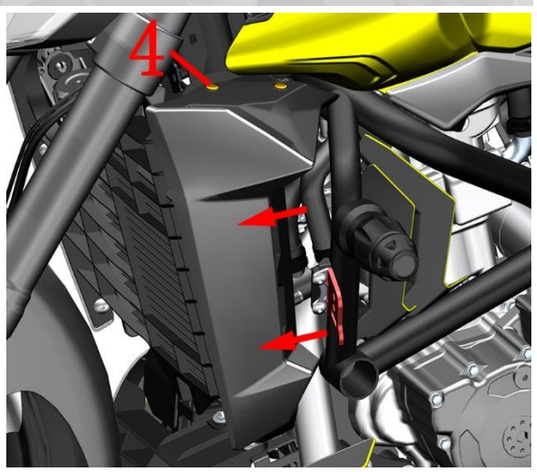

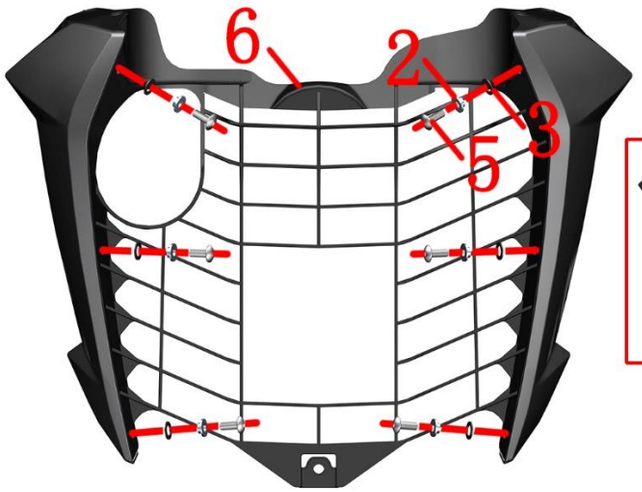

Fig.4 COOLING SYSTEM COMPONENT		Radiator cover component 1	CHK ADJ	
NO.	PART NO.	PART NAME	QTY	CAUTION
1	1251112-002093	M6×30 Hexagon flange bolts (color Zinc)	1	
2	1274100-155095	Flanged bushing ϕ6.2×ϕ8.4×3.5 + ϕ14×1.5(5 pcs/after	7	
3	1241200-124021	flanging bushing buffer rubber (ϕ8.5×ϕ14×1)(5 pcs/af	7	
4	1224100-089000	ZT250-S Expansion nail(5 pcs/after-sale)	4	
5	1251100-102000	Non-standard bolt M6×16 (304 stainless steel)	6	
6	1224300-029000	ZT350-V1 radiator trim cover center	1	

PROCEDURE:

●Radiator decorative cover assembly

Remove the bolt (1) under the middle part of decorative cover with 8# sleeve, take off bushing(2) and buffer rubber (3).

Remove the swell nail(4) after pressing the intermediate part of it .

Turn the front of the car to the left. Grasp the component on the right side of the trim cover as indicated by the arrow and pull out the clip.

Pull out the left clip in the same way and remove the radiator trim cover assembly from the vehicle.

Remove 6 bolts (5) with 4# hexagon socket, remove bushing (2) and buffer glue (3), and disassemble middle part (6), left decorative cover assembly and right decorative cover assembly.

CAUTION:

●Pull out hard directly when pulling out, and do not shake it to the sides to prevent damage to the staples.

●Pay attention to the surface of the material.

●Disassemble the engine and radiator after they have been completely cooled.

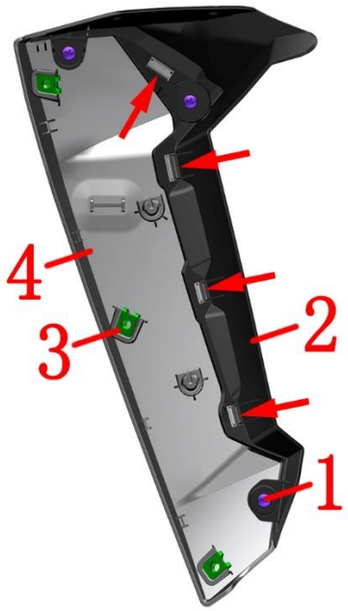

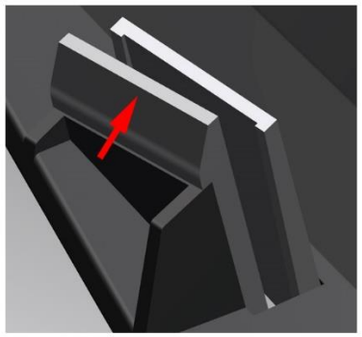

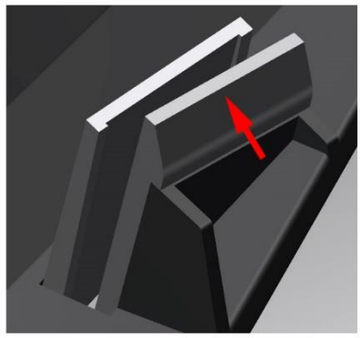

Fig.5 COOLING SYSTEM COMPONENT		Radiator covercomponent 2	CHK ADJ	
NO.	PART NO.	PART NAME	QTY	CAUTION
1	1251200-038093	Non-standard self-Tapping screwST3.9×12(zine)	6	
2	1224200-116000	ZT310-V radiator trim cover right rear part	1	
3	1251300-063093	Plywood M6×11×15(color Zinc)	6	
4	4044201-245052	ZT310-V radiator decorative cover front right (dark grey)	1	
5	1224200-115000	ZT310-V radiator trim cover left rear	1	
6	4044201-244052	ZT310-V radiator trim cover front left (dark grey)	1	

PROCEDURE:

●Radiator decorative cover assembly

Remove the self-tapping screws (1), and pry the four snaps in the direction indicated by the arrow to separate the right rear part (2) and the right front part (4). Remove the 3 plywood nuts (3) from the right front.

Remove the left rear part (5) and the left front part(6) of the trim cover by referring to the previous steps.

CAUTION:

●Pay attention to the surface of the material.

●When reassembling, be careful to first set the self-tapping screws perpendicular to the mounting surface and not to use excessive torque.

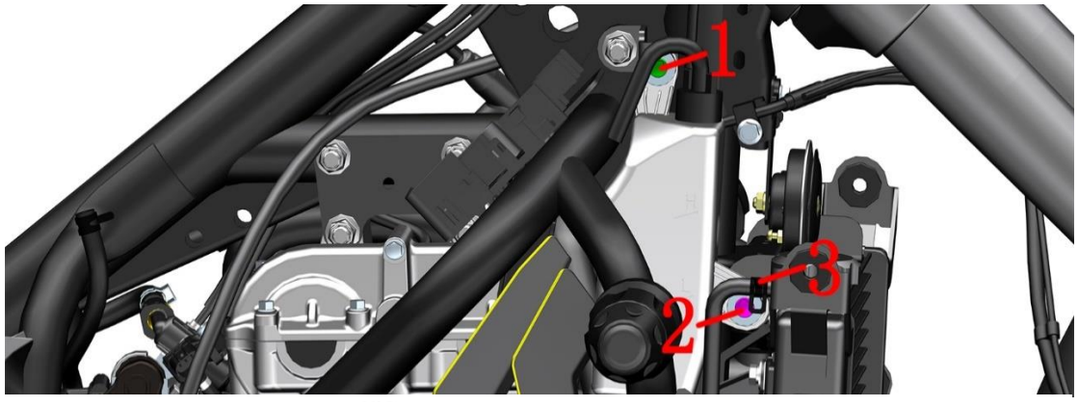

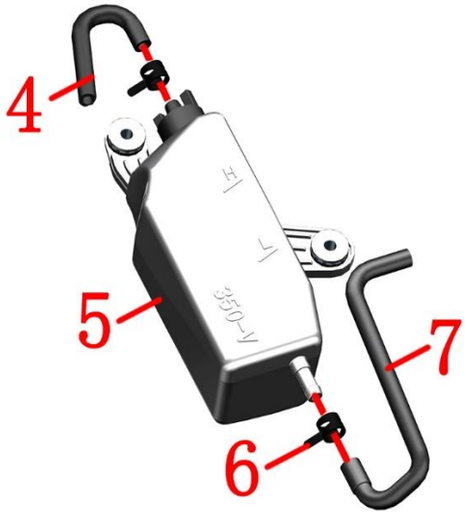

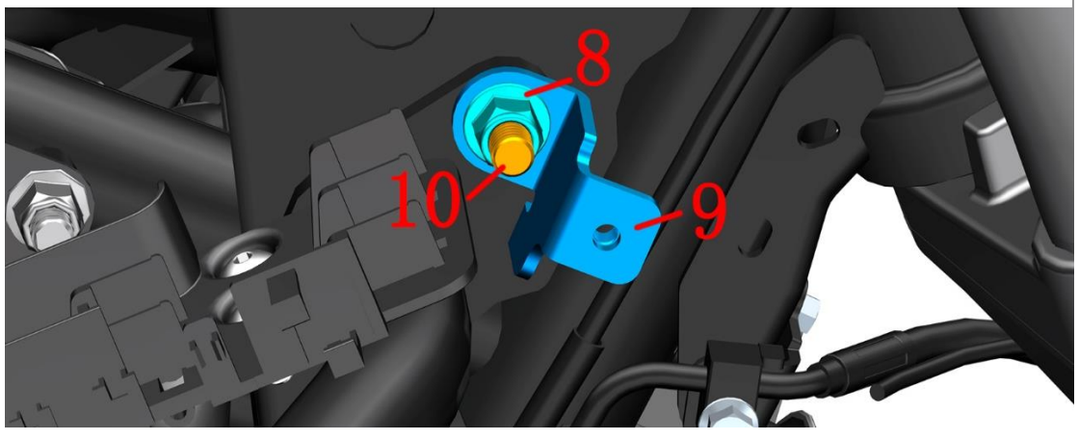

Fig.6 COOLING SYSTEM COMPONENT		Vice water tank components	CHK ADJ	
NO.	PART NO.	PART NAME	QTY	CAUTION
1	1251100-061093	M6×22 Hex flang bolt thread level 8.8 (color Zinc)	1	
2	1251112-003093	M6×45 Hex flange surface 9.8 bolt (color Zinc)	1	
3	1276001-056000	ZT310 water pipe clamp(ϕ9)(after-sale)	1	
4	1244200-069000	ZT310-V auxiliary water tank leakage pipe	1	
5	1224300-030000	ZT350-V vice water tank	1	
6	1276001-057000	ZT310 water pipe clamp(ϕ10.5)(after-sale)	2	
7	1244200-070000	Auxiliary water tank is connected with water pipe	1	
8	1251300-057093	Non-standard nut M10×1.5(Dacromet)	1	
9	1274200-184000	ZT310-V auxiliary water tank bracket	1	
10	1251100-132003	Non-standard bolt M10×1.5×80 (Dacromet)	1	

PROCEDURE:

●Vice water tank assembly

Remove the bolts (1) and (2) with 8# sleeve,pull the vice water tank assembly out of the gap.

After wearing the waterproof rubber gloves, put the sub tank assembly upside down (the sub water tank cover down) into a plastic container.

After clamping the hoop (3) with pliers, pull the water pipe out of the main tank and remove the hoop (3).

Vent the coolant in the secondary tank.

Remove the leak pipe (4).Added a hoop(6) from approximately November 13,2023.

Clamp the hoop (6)with pliers and pull the water pipe (7) out of the sub tank (5), then remove the hoop (6).

●Sub water tank bracket.

If it is necessary to remove the auxiliary tank bracket, fix the bolt (10) with 14# sleeve then remove the nut (8) with 14# sleeve .

Remove the sub tank bracket (9) after pulling out the bolt (10).

CAUTION:

●Disassembling the cooling system while the motorcycle is hot is prohibited. Wait until the engine and muffler cool down thoroughly for the manipulation.

●Cooling liquid should be collected and hand over to qualified facilities for further treatment. Do not pour the oil anywhere and avoid pollution of environment and water source.

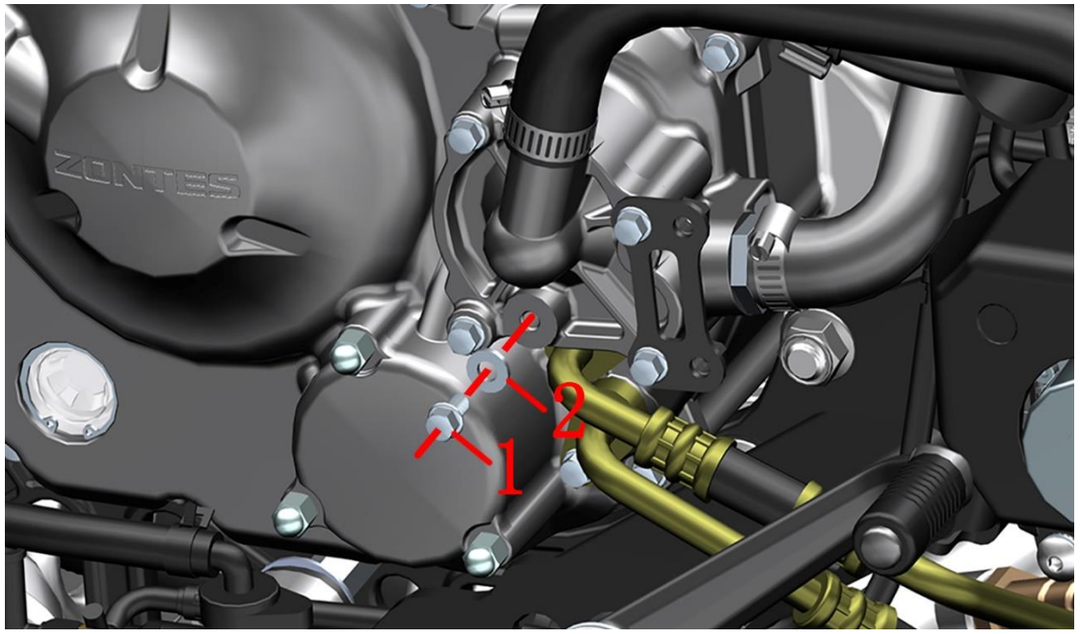

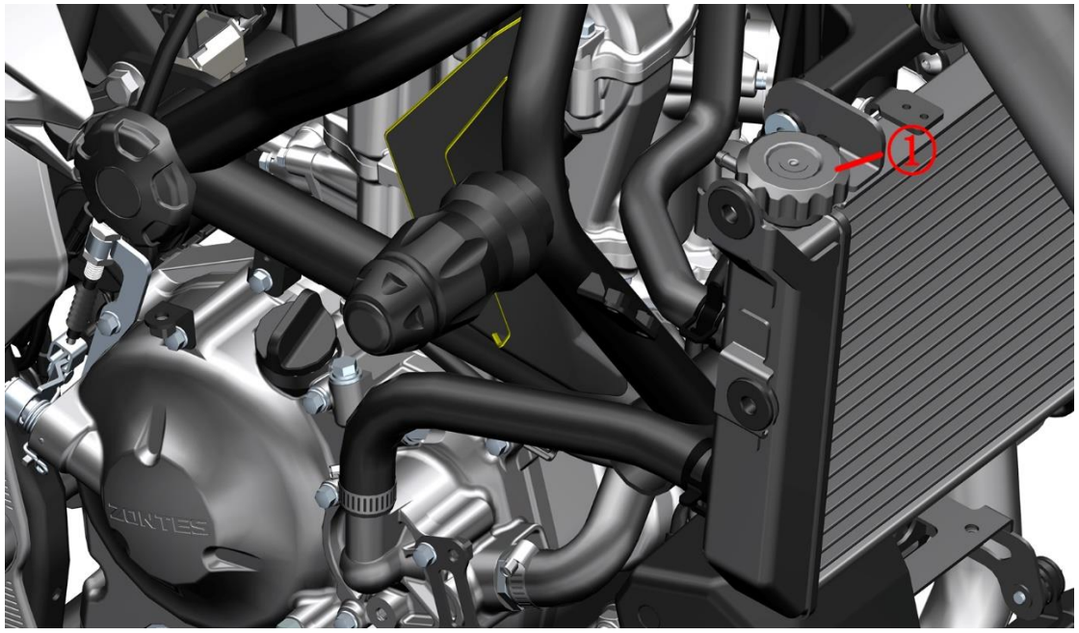

Fig7 COOLING SYSTEM COMPONENT		Draining coolant	CHK / ADJ	
NO.	PART NO.	PART NAME	QTY	CAUTION
1	1251100-067093	M6×10 top pin bolt (color Zinc)	1	12±1.5N.m
2	1051654-002000	Combination seal 6×13×1.8	1	

PROCEDURE:

●Drain the cooling liquid

Refer to the previous “Sub tank assembly” procedure to vent the coolant in the sub tank.

After placing the oil pan or other container under the right side of the vehicle, tilt the vehicle to the right.

After wearing waterproof gloves with both hands, remove the bolts (1) with a 8# sleeve and remove the combination seal(2).

Drain the coolant with a funnel or other device.Open the cooling liquid tank cover① to accelerate the draining of cooling liquid in the cooling system.

Wipe out all of the cooling liquid on surface every component with a clean cloth.

CAUTION:

●Motorcycle should be well supported.

●Manipulation should start after the engine is completely cooled down.

●Cooling liquid is toxic. Avoid strictly eye or skin contact.

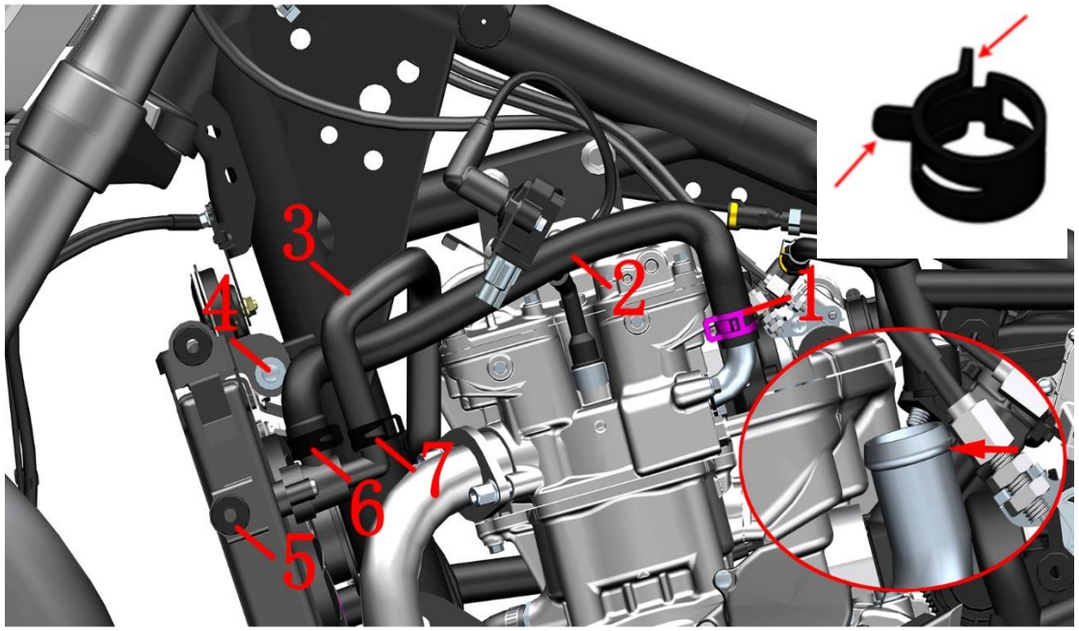

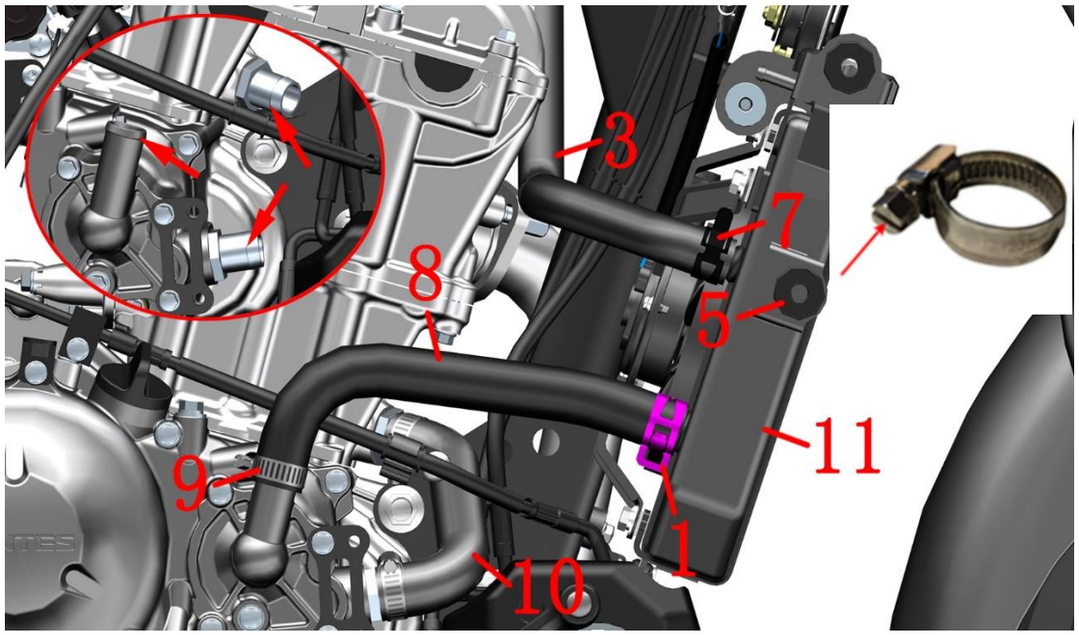

Fig.8 COOLING SYSTEM COMPONENT		Main water tank assembly 1	CHK ADJ	
NO.	PART NO.	PART NAME	QTY	CAUTION
1	1274200-090000	ZT310 water pipe clamp(ϕ26)	2	
2	1244200-071000	ZT310-V engine outlet pipe	1	
3	1244200-113000	ZT310-V small circulation water pipe (right backwater)	1	
4	1251112-002093	M6×30 Hexagon flange bolts (color Zinc)	1	
5	1244100-138000	ZT250-S Side cover round rubber(5 pcs/after-sale)	4	
6	1274200-091000	ZT310 water pipe clamp(ϕ27)	1	
7	1274200-089000	ZT310 water pipe clamp(ϕ22)	2	
8	1244200-068000	ZT310-V engine inlet pipe	1	
9	1276001-055000	ZT310 Water pipe clamp (ϕ26)(after-sale)	3	
10	1244200-012000	ZT310-R water pipe of engine	1	
11	1274200-274021	ZT310-V main water tank (without temperature control switch/right small backwater)	1	

PROCEDURE:

●Main water tank assembly

Locate the connector for the radiator fan on the right side of the vehicle and pull it off.

Clamp hoop (1) and hoop (6) with hoop pliers, move them up and out of the anti falling boss, and then loosen the hoop. Pull out the water pipe (2) after wearing waterproof gloves. Remove the hoop (1) and hoop (6). Use the same method to remove two holding hoops (7) and pull out the water pipe (3).

Loosen the clamp (9) at the water pump cover with a slotted screwdriver and remove it from the boss indicated by the arrow. Remove the clamp (1), pull out the water inlet pipe (8), and then remove the clamp (9) and clamp (1) from the water pipe.

Remove the bolt (4) with 8# sleeve to remove the main water tank assembly.

Remove 4 pieces of round rubber (5) from the main water tank (11).

If it is necessary to remove the water pipe (10), loosen the clamp (9) and remove it according to the above steps.

See the next page for information about the main water tank.

CAUTION:

●Motorcycle should be well supported.

●Manipulation should start after the engine is completely cooled down.

●Cooling liquid is toxic. Avoid strictly eye or skin contact.

●Do not disassemble the hoop with too strong force. If not, it will cause permanent deformation and lose elasticity, which will lead to leakage of cooling liquid.

●When reassembling, be careful that the clamps and hoops should be prevented from loosening on the inside of the boss.

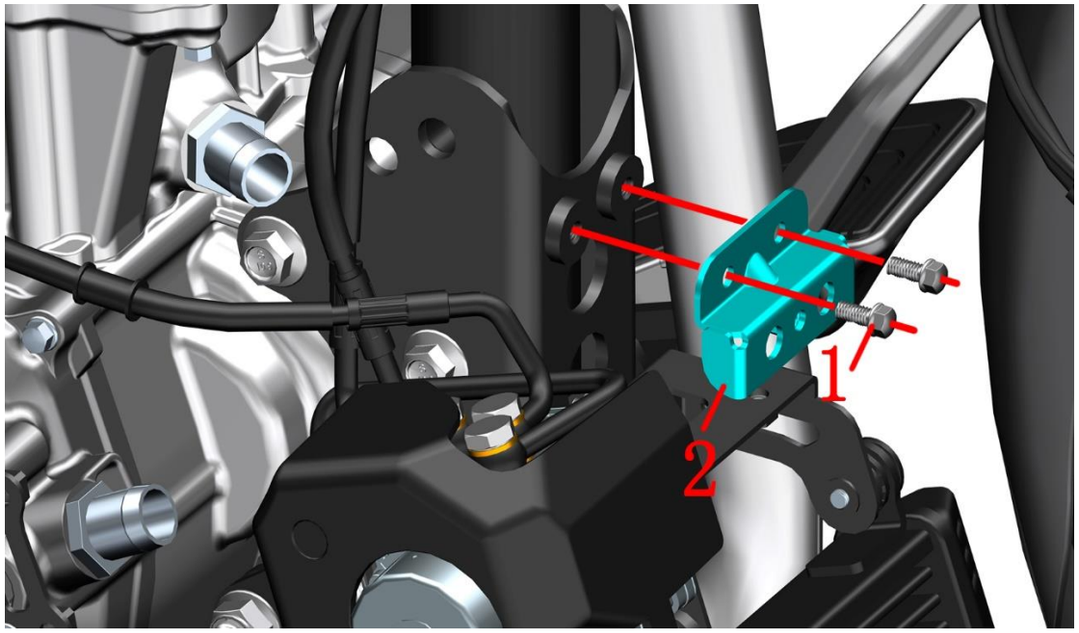

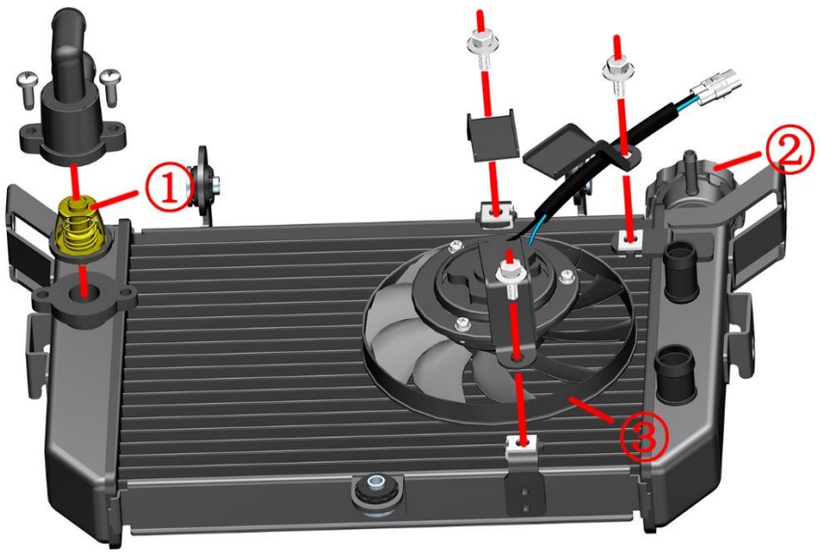

Fig.9 COOLING SYSTEM COMPONENT		Main water tank assembly 2	CHK ADJ	
NO.	PART NO.	PART NAME	QTY	CAUTION
1	1250104-006097	GB16674M6×12 (chromed/HH)	2	
2	1274300-043000	ZT350-VX radiator lower bracket	1	

PROCEDURE:

●Main water tank bracket

Remove 2 pieces bolts(1) with 8# sleeve then take off the bracket(2).

●Main water tank

①Thermostat

Check the opening temperature, full opening temperature and lift of the main valve in the thermostatic heating equipment with adjustable temperature. If one of them does not meet the specified value, it should be replaced. Or use a thermometer, water, heater, and container to test.

The initial opening temperature of the thermostat is 80～84℃, and the core moving 0.1mm can be regarded as the initial opening. The full opening temperature is 95°C, and the core movement is greater than 3.5mm.

The simple test method is to put the core body into a high temperature resistant container, pour it into boiling water and soak for a period of time, take out the core body with pliers, and observe whether the valve can be fully opened. Until all closed.

②Add water cover

③Fan

Find a battery with sufficient power and connect the wires according to the positive and negative poles, and check whether the fan draws air backwards.

●Main water tank maintenance

Compressed air with lower air pressure can be blown from the back to the water tank from a long distance to clean up foreign objects on the surface. Or use a low-pressure water gun to spray the radiating fins from a long distance to clean up foreign objects on the surface.

CAUTION:

●Cooling liquid is toxic. Avoid strictly eye or skin contact.

●Do not disassemble the hoop with too strong force. If not, it will cause permanent deformation and lose elasticity, which will lead to leakage of cooling liquid.

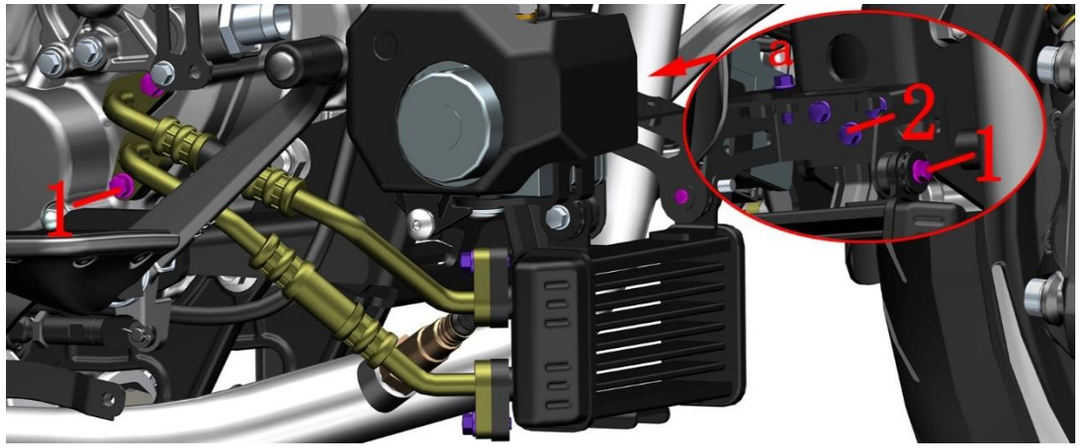

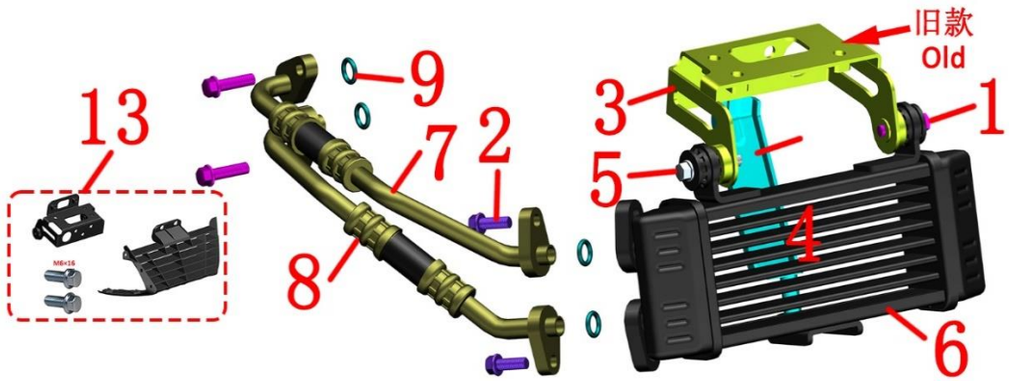

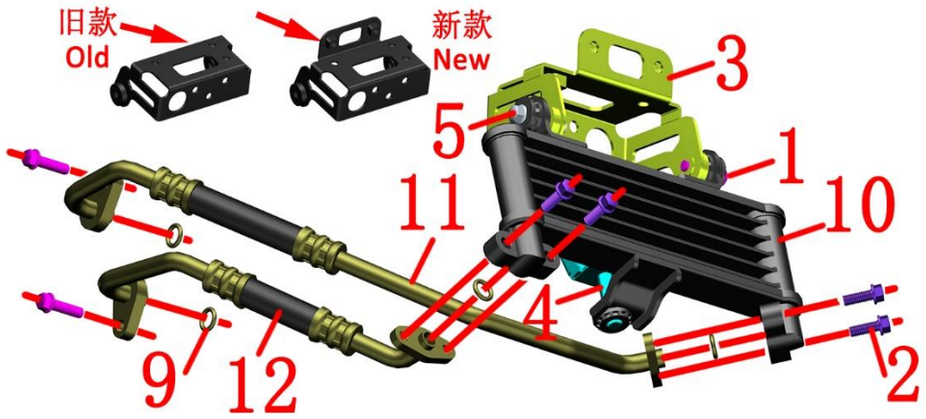

Fig.10 COOLING SYSTEM COMPONENT		Oil cooler component	CHK ADJ	
NO.	PART NO.	PART NAME	QTY	CAUTION
1	1251100-061093	M6×22 Hex flang bolt thread level 8.8 (color Zinc)	3	
2	1251112-001093	M6×16 Hexagon flange bolts (color Zinc)	8	
3	1274300-045000	ZT350-VX oil cooler upper bracket	1	
4	1274300-046000	ZT350-VX oil cooler lower bracket	1	
5	1251112-002093	M6×30 Hexagon flange bolts (color Zinc)	1	
6	1274300-022000	ZT350 oil cooler	1	Old model
7	1244300-012000	ZT350-V oil inlet pipe of engine	1	
8	1244300-011000	ZT350-V engine oil outlet pipe	1	
9	1051454-025000	9.8×2.4 Hydrogenated nitrile rubber O-ring	4	
10	1274300-125000	ZT350-R oil cooler （collector tubes）	1	New model
11	1274300-176000	ZT350-V Engine Fuel Inlet Pipe (TFL)	1	
12	1274300-177000	ZT350-V Engine Fuel Outlet Pipe (TFL)	1	
13	4044302-526000	ZT350-V1 lower middle shroud after-sales kit	1	after-sale

PROCEDURE:

●Oil cooler

First drain the oil according to the steps of "Change engine oil".Remove according to the steps of removing the shroud.

First remove the bolt (2) at “a” with 8# sleeve, and then remove the three bolts (2) of bracket plate with 8# sleeve. Pull down the oil cooler assembly and remove the lower support (4) first.

Tilt the vehicle to the left, remove the two bolts ((1) at the right engine cover with 8# sleeve and pull out the two oil pipes. Keep the oil cooler in the low position, grasp the two oil pipes to keep them in the high position, and remove the oil cooler assembly. Pour the oil in the oil cooler into the oil pan.

Old model cooler: Remove the remaining two bolts (2) fixing the oil pipe with 8# sleeve, and remove the oil inlet pipe (7), oil outlet pipe ((8) and O-ring (9).

New model cooler: Remove the remaining 4pcs bolts (2) fixing the oil pipe with 8# sleeve, and remove the oil inlet pipe (11), oil outlet pipe ((12) and O-ring (9).

Remove the bolts(5)and(1) fixing the oil cooler with 8# sleeves and pull down the oil cooler(6) or (10).

CAUTION:

●Remove the lower shroud and hydraulic control unit component first.

●Disassembling the cooling system while the motorcycle is hot is prohibited. Wait until the engine and muffler cool down thoroughly for the manipulation.

●Wasted engine oil should be collected and hand over to qualified facilities for further treatment. Do not pour the oil anywhere and avoid pollution of environment and water source.

●The old model is manufactured before 23: 59: 59 on April 6, 2023 and the new model starts at 0: 00 on April 7. The old model can not be interchanged,the old model if you need to replace the middle or bracket need to buy " 40443-02-526000ZT 350-V 1 lower middle shroud after-sales kit", otherwise can not be

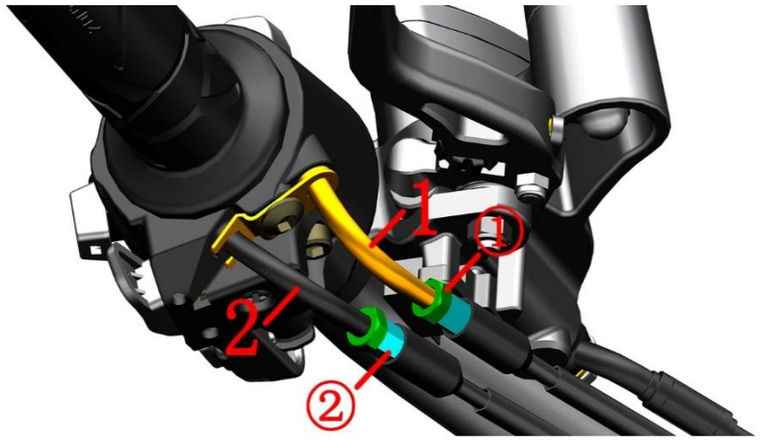

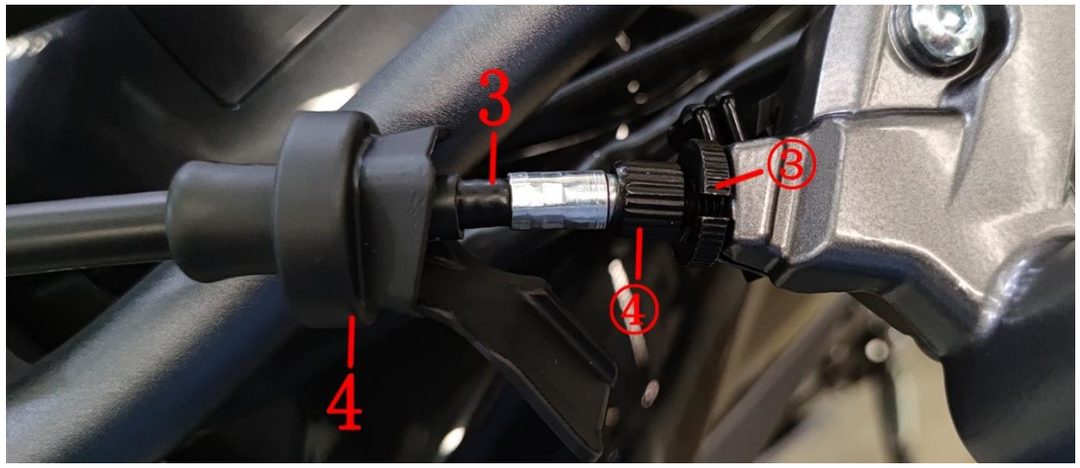

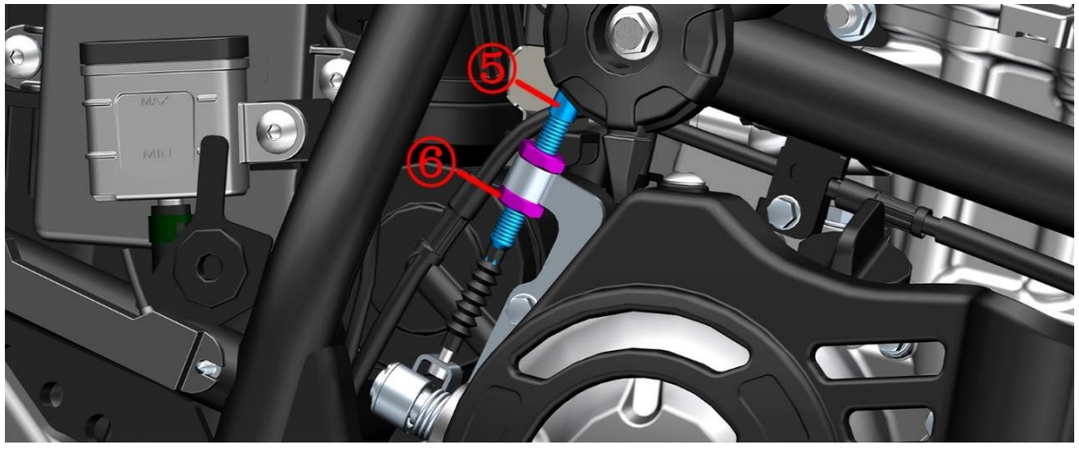

Fig.1 FRONT FORK COMPONENT		Throttle/clutch cable clearance adjustment	CHK ADJ	
NO.	PART NO.	PART NAME	QTY	CAUTION
1	1154300-004000	ZT350-X throttle refueling cable	1	
2	1154300-005000	ZT350-X throttle return cable	1	
3	1154300-008000	ZT350-V clutch cable	1	
4		Clutch cable sheath	1	

PROCEDURE:

●Throttle line

Use an 10# open-end wrench to loosen the lock nut ① on the throttle refueling line (1) or the return line (2), and turn the adjustment screw ② to adjust the clearance to 2 to 4 mm. Use 8# open-end wrench to tighten the nut ① after adjustment.

●Clutch line

Fine adjustment:

Move away the protective rubber sleeve (4) on the clutch rocker arm, loosen the nut ③ with pliers, rotate the adjustment screw ④, finally lock the nut ③, and then reset the dust jacket. After adjusting, pay attention to the nut ③, the adjustment screw ④ and the groove of the rocker seat should be staggered to prevent the cable from coming out.

Big adjustment:

If fine adjustment cannot be achieved, loosen the nuts⑥ with an 14# open-end wrench, rotate the adjustment screw ⑤, and finally tighten the nuts ⑥.

CAUTION:

●The motorcycle support should be fixed during disassembly to prevent accidents caused by incline.

●Throttle line adjustment should be noted as follows:

After adjustment, ensure that the throttle can be reset automatically. It is forbidden to increase the idle speed of the engine due to adjustment of the cable.

The engine idle speed rise cannot occur in the direction of rotation.

Checking the engine idle speed should be performed under the condition of a heat engine and should be at 1500 to 1700 rpm.

●The clutch adjustment should be noted as follows: Excessive free travel can cause wear and malfunction of the clutch and gearshift mechanism. After adjustment, be sure to stagger the nut, adjusting screw, and slot on the rocker arm to a certain position to prevent the cable from coming out of the slot.

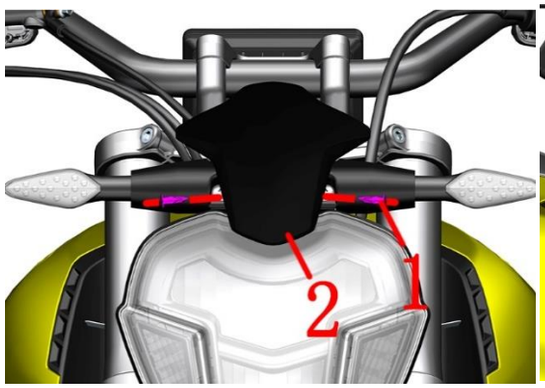

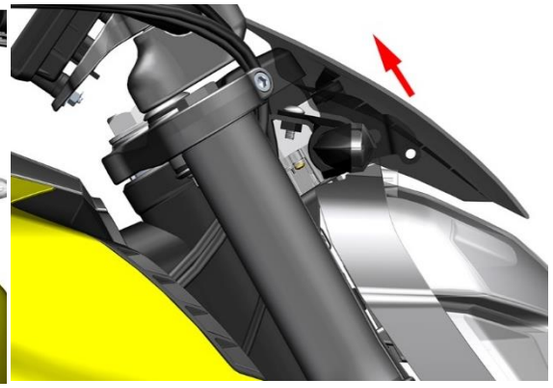

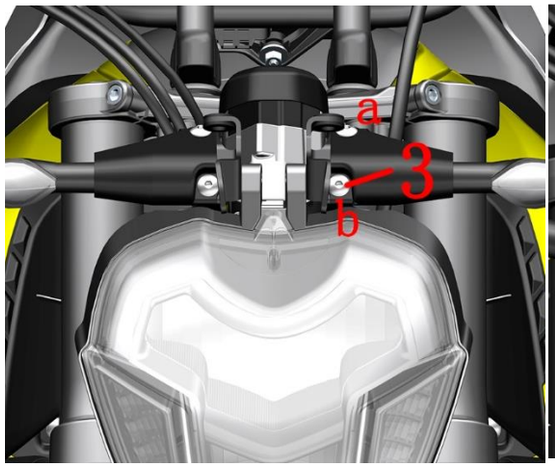

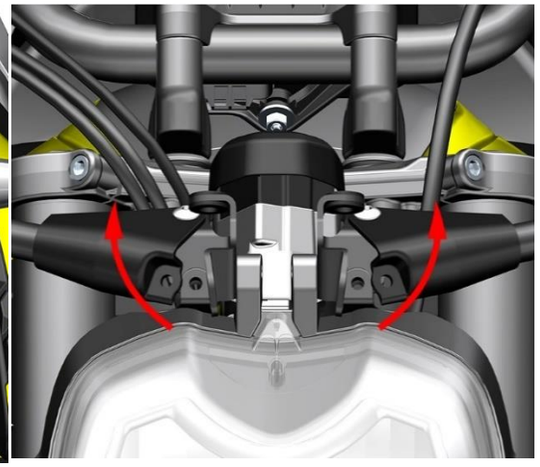

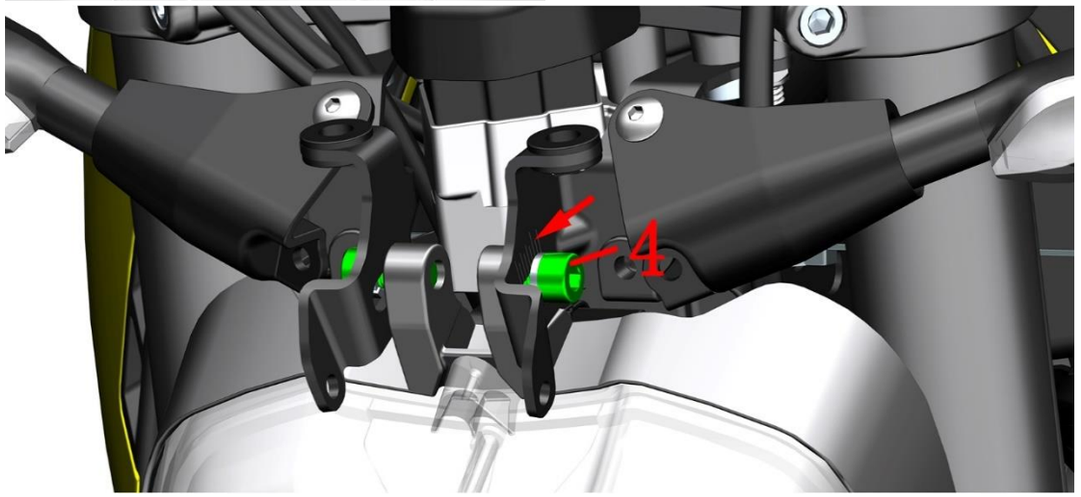

Fig.2 FRONT FORK COMPONENT		Light height adjustment	CHK ADJ	
NO.	PART NO.	PART NAME	QTY	CAUTION
1	1224100-089000	ZT250-S Expansion nail(5 pcs/after-sale)	2	
2	1224200-117000	decorative hood over ZT310-V headlamp	1	
3	1251100-102000	Non-standard bolt M6×16 (304 stainless steel)	4	
4	1250205-040095	GB70.1 inner hex bolt M8×16(color Zinc)	2	

PROCEDURE:

●Decorative hood over headlamp

Remove the center of the expansion screw (1) and remove it.

Pull the headlight cover (2) in the direction of the arrow.

●Light height adjustment

Using 4# inner hexagon socket remove the two bolts (3) at "b"; loosen the two bolts (3) at "a". Rotate the two turn signal assemblies up to expose the head of the bolt (4).

The driver rides the motorcycle and the motorcycle is upright. The other person inserts a 6#inner hexagon will loosen the bolts (3) on both sides and adjust the light to the proper position to lock.

Note that tick marks aligned on both sides.

CAUTION:

●Light height adjustment should be noted as follows:

Too High or too low light levels can affect safe driving. The height of the lights should be properly adjusted according to whether there are changes in the weight of the occupants and the driver.

It is forbidden to adjust the light height during riding. It is advisable to adjust the road with a smooth road surface and a straight line distance of about 150 meters without affecting traffic safety at night.

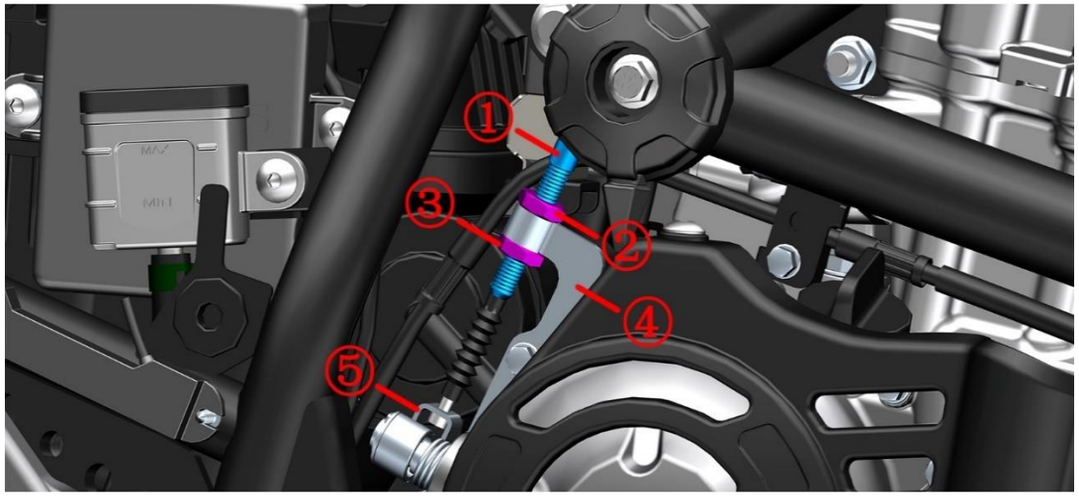

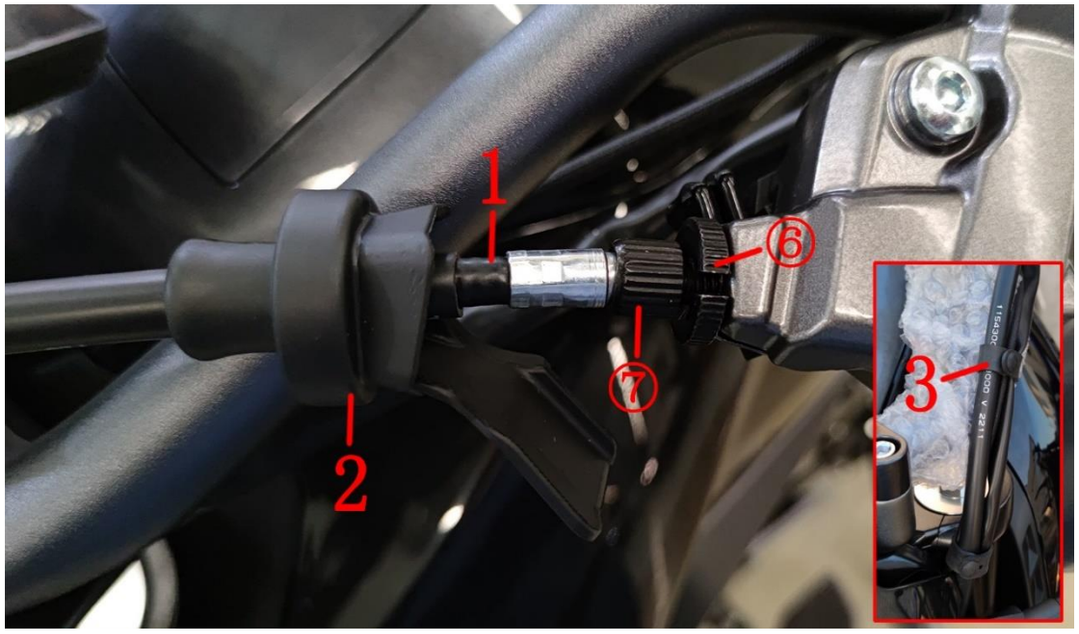

Fig.3 FRONT FORK COMPONENT		Replacement clutch cable	CHK ADJ	
NO.	PART NO.	PART NAME	QTY	CAUTION
1	1154300-008000	ZT350-V clutch cable	1	
2		Clutch cable sheath	1	
3	1244300-119000	ZT310 rubber buckle (50mm)(5 pcs/after-sale)	2	

PROCEDURE:

●Remove the cluch line

Use an 14# open-end wrench to loosen the nuts ② and ③; fix the adjusting screw ①, rotate the nut ② up to the top of the thread of the adjusting screw, and screw the nut ③ to the bottom to completely separate from the thread. Separate the clutch wire core connector from the bracket ⑤, close the nut ③ to the black sheath with one hand, and remove the adjustment screw ① from the bracket ④ with one hand.

First,move away the protective rubber sleeve (2) and the nut ⑥ is loosened with the pliers; the nut ⑥ and the adjusting screw ⑦ are rotated to the same position as the groove on the rocker arm, and remove the cable from the rocker arm seat.

First untie the thread buckle (3).

Remove the clutch line.

Remove the protective sleeve (2) from the clutch cable(1).

●Install the clutch line

Put protective rubber sleeve (2) into clutch elbow.

After inserting the clutch cable joint into the rocker arm, screw the nut ⑥ and the adjusting screw ⑦ to the groove on the rocker arm.

Assemble the clutch cable into place according to the original alignment.

Rotate the nut ② up to the top of the thread of the adjusting screw, and screw the nut ③ to the bottom to completely separate from the thread.

Take the nut ③ close to the black sheath with one hand and insert the adjustment screw ① into the bracket ④ with one hand.

Insert the clutch core connector into the hole of the bracket ⑤.

Initially position the nut ② first, adjust the free stroke adjustment in the clutch cable adjustment, and then lock the nut ③.

Finally, reset the protective rubber sleeve (2).

CAUTION:

●The motorcycle support should be fixed during disassembly to prevent accidents caused by incline.

●Before replacing the clutch line, it is necessary to disassemble the seat cushion, fuel tank, liner, side cover, etc.

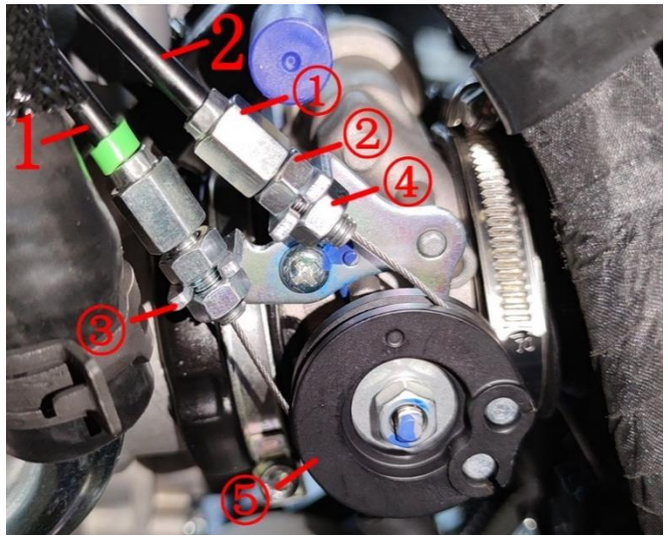

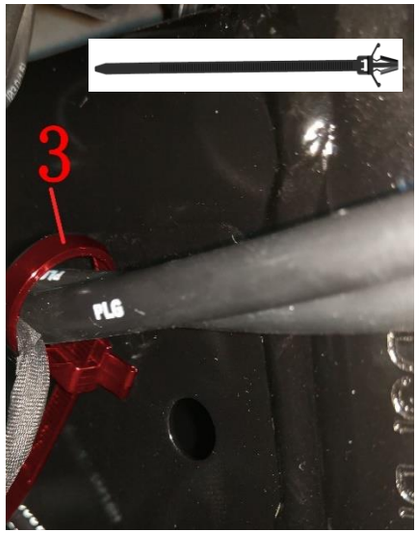

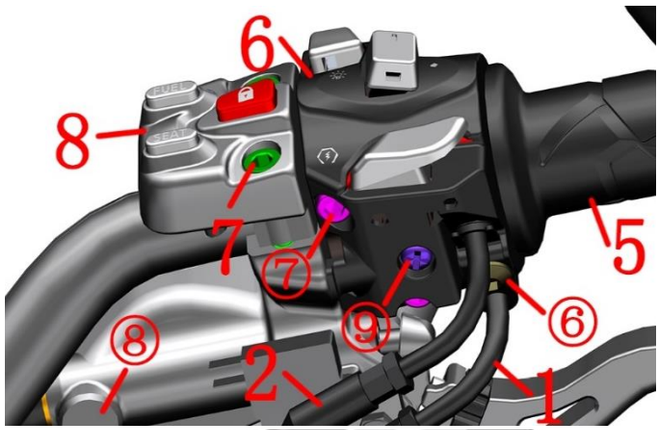

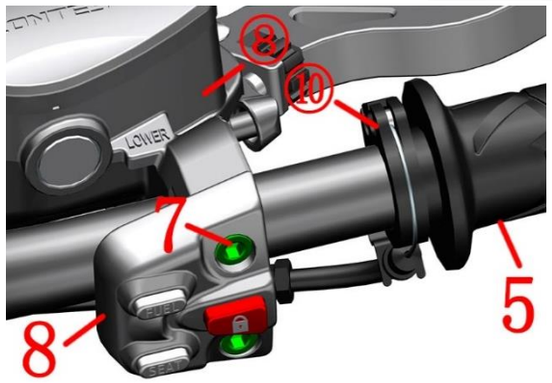

Fig.4 FRONT FORK COMPONENT		Replace the throttle line	CHK ADJ	
NO.	PART NO.	PART NAME	QTY	CAUTION
1	1154300-004000	ZT350-X throttle refueling cable	1	
2	1154300-005000	ZT350-X throttle return cable	1	
3	1224100-030000	Pin tie (Black 4.8×130)	1	
4	1244300-119000	ZT310 rubber buckle (50mm)(5 pcs/after-sale)	1	
5	1244100-140000	ZT250-R right handle bar rubber sleeve(after-sale)	1	
6	1184200-185000	ZT310-V1 Right handle switch	1	
7	1250205-031091	GB70.1M6×30(stainless steel)	2	10N.m
8	1186200-012000	ZT310T-M right hand switch (dark gray TFT-500)	1	

PROCEDURE:

●Disassemble the throttle line

Release the thread buckle (4) first.

Use 10# an open-ended wrench to screw the nut ② of the accelerator oil line (1) up to the bottom, and screw the nut ④ down out of the adjusting pipe ①; Remove the cylindrical joint of the oil filling line from the rotary table ⑤; Referring to the previous steps, first completely loosen the nuts ② and ④ of the oil return line (2), remove the cylindrical joint from the rotary table, and then move the adjusting pipe of the oil return line (2) upward, over the bracket ③ on the throttle valve, and then pull it out.

Thread the throttle cable through the gap of the tie (3).

Hold the right-hand handle switch (6) by hand, remove the bolts ⑥ and ⑦ with 5# hexagon socket, and then remove the bolts ⑨ with a cross screwdriver. Separate the upper and lower parts of the handle switch. Pay attention to wiring during reassembly and do not press the cable.

Remove the throttle cable from the handle core rotary table ⑩ of the right-hand rubber sleeve (5), and finally from the cable hole at the lower part of the switch.

●Install throttle cable

First, thread the throttle cable into the cable hole at the lower part of the switch. Install the cylindrical joint of the throttle line into the handle core rotary table ⑩ of the right-hand handle rubber sleeve (5). Clamp the oil return line into the limit groove on the oil filling line, and lock the bolt ⑥ with 5# hexagon socket tool with a torque of 8 ~ 10N m。 After the installation hole of the switch is aligned, screw the bolt ⑦ a few turns, then observe that the positioning hole at the lower part of the switch (6) is aligned with the steering handle, and then lock the bolt ⑨ and bolt ⑦. Reset the auxiliary switch and rocker arm assembly, and pay attention to align the symbols on the switch.

Install the throttle cable into the tie (3).

Screw the nut ② of accelerator oil filling line (1) or oil return line (2) up to the end with the open hand, and screw the nut ④ down out of the adjusting pipe ①.

Put the oil return line into the support ③, and then put the joint into the rotary table ⑤.

Put the oil filling line into the support ③, and then put the rotary table ⑤ at a certain angle, and then put the joint in.

Adjust the throttle cable clearance according to the method of adjusting the clearance; The idle speed should not change and reset flexibly when turning the steering handle left and right after adjustment.

Lock nuts ② and ④.

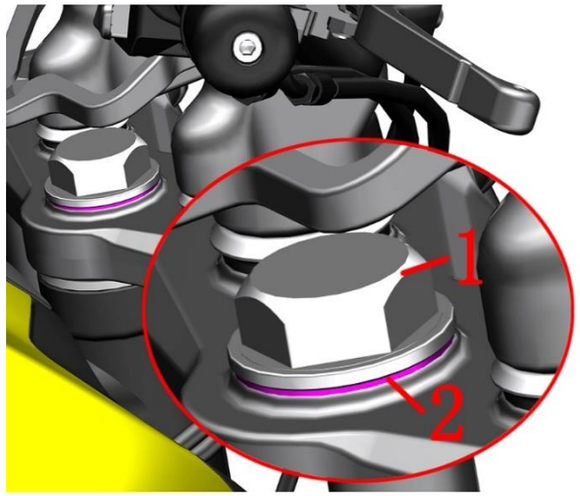

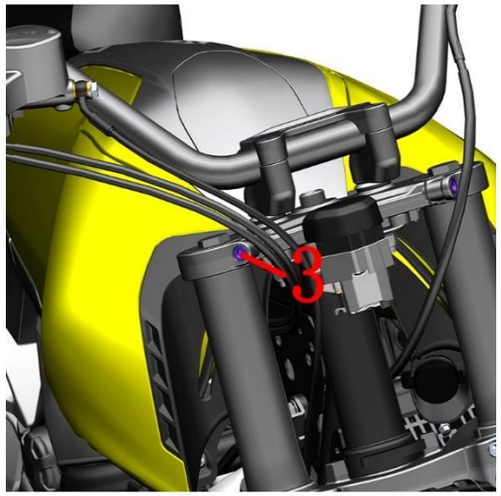

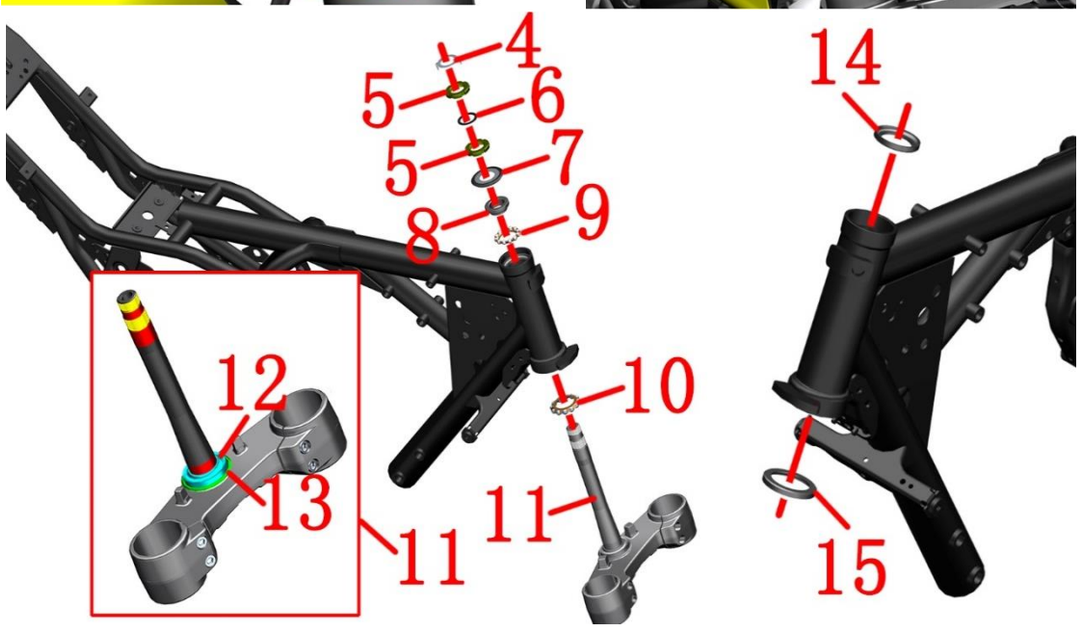

Remove the adjusting nut (5), remove the upper dust cover (7), shaft ring (8)、cinjoined steel ball(9)、cinjoined steel ball(10)、lower coupling plate assembly (11). Remove the directional column & front shock absorber & front wheel assembly, and check the shaft ring and the connecting steel ball for abnormal wear or rust . At the same time, check whether the seat rings (14) and (15) in the front riser of the frame are abnormally worn or rusted.The newly replaced conjoined steel ball should be evenly greased, pay attention to the amount of grease.

Fig.5 FRONT FORK COMPONENT		Steering adjustment	CHK ADJ	
NO.	PART NO.	PART NAME	QTY	CAUTION
1	1251300-088000	ZT350-R upper connection decoration nut M22×1	1	100N.m
2	1251500-100000	ϕ22.5×ϕ39×1 gasket (chrome plated)	1	
3	1250205-034093	GB70.1 inner hexagonal M8×30 (color Zinc)	2	25N.m
4	1134100-040000	ZT250-S Adjusting nut locking washer(5 pcs/after-sale)	1	
5	1251300-046093	ZT250-S direction column adjusting screw nut M24X1	2	
6	1244100-135000	ZT250-S Adjusting nut rubber gasket (5 pcs/after-sale)	1	
7	1244300-014000	ZT350-R upper dust cover	1	
8	1130900-053000	ZT250-S shaft ring (after-sale)	1	
9	1130900-054000	ZT250-S conjoined steel ball (5 pcs/after-sale)	1	
10	1134300-002000	ZT350-R conjoined steel ball	1	
11	4094300-002051	ZT350-R lower connection Board (with bead top)	1	
12	1134300-003000	ZT350-R lower shaft ring	1	after-sales
13	1244300-015000	ZT350-R dust cap(down)	1	
14	1130900-052000	ZT250-S upper steel bowl (after-sale)	1	
15	1134300-001000	ZT350-R lower seat ring	1	

PROCEDURE:

●When the front fork is slightly swaying or when the direction handle is swung

Check if the pressure of the front tire is the recommended air pressure at room temperature: 280 kPa. If it is lower than the recommended air pressure, the front tire pressure should be inflated to 350 kPa first, and then deflated to 280kPa. If it is otherwise set the front wheel and turn to inspect the tire tread, if it is worn or deformed, the front tire needs to be replaced. If no, continue to operate.

●Check steering device

Set up the front wheel and shake the lower part of the fork by hand to check if the steering shaft is loose or if the left and right rotations are not flexible.

Adjust the adjustment nut:

Remove the trim nut (1) with a 30# ring spanner, remove the gasket (2), and remove the bolt (3) with 6# inner hexagon socket. The direction of the upper board assembly wrapped with a clean cloth and then placed to prevent scratches. Remove the lock washer (4); remove the upper adjustment nut (5) with a hook wrench and remove the pad (6).

If the steering resistance is too large, turn the lower adjustment nut (5) counterclockwise. If the brake is slightly swaying or swings, rotate clockwise. The torque is about 14N.m. It is appropriate.

When reassembling, the top adjusting nut only needs to be screwed to align with the bottom nut groove, so as not to over-tighten to avoid excessive deformation of the pad (6); the torque requirement of the decorative nut (1) is 100 N·m.

● Steering bearing

If the above operation still can not rule out excessive steering resistance or stuck as follows:

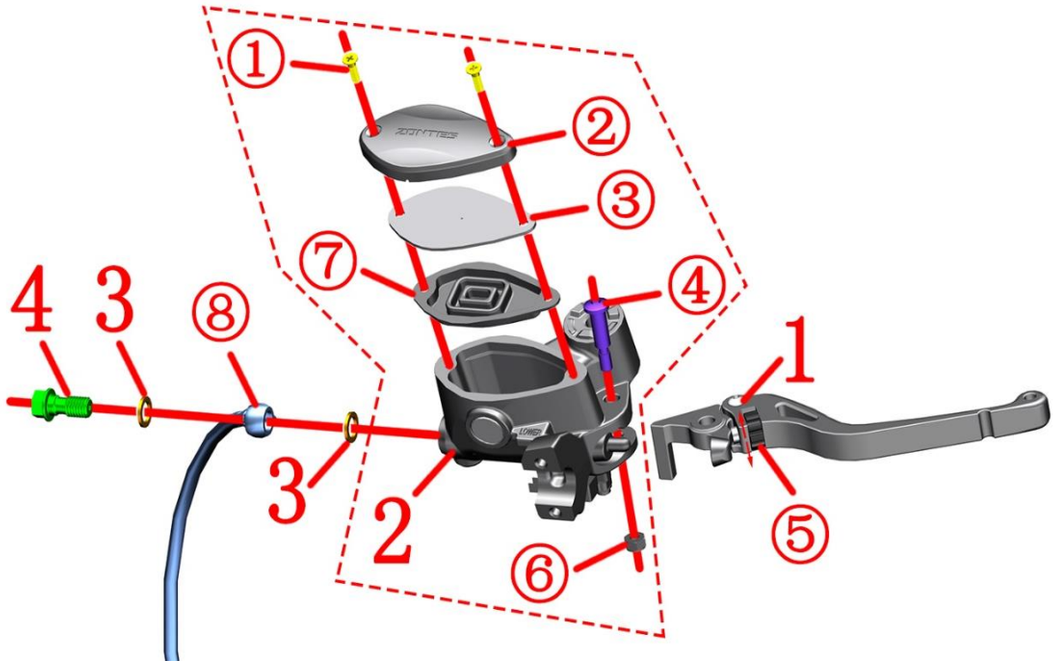

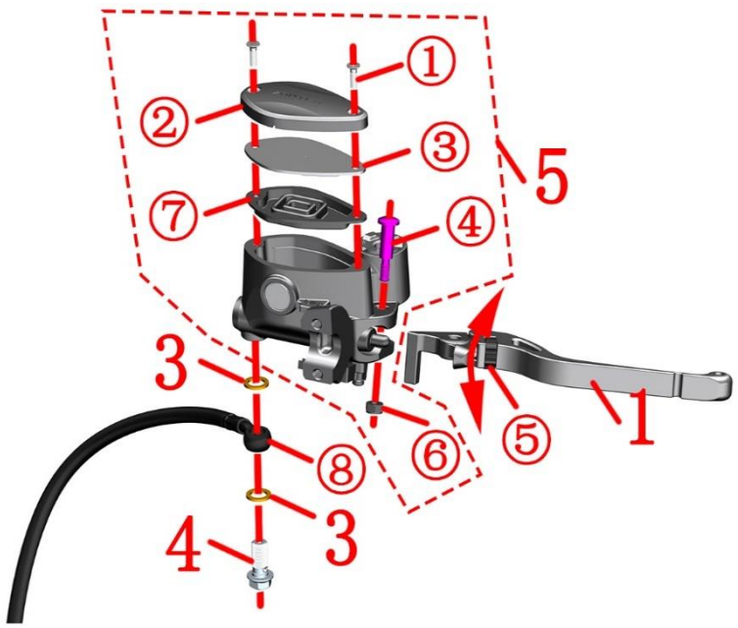

Fig.6 FRONT FORK COMPONENT		Add brake fluid, rocker adjustment	CHK ADJ	
NO.	PART NO.	PART NAME	QTY	CAUTION
1	1100100-833000	ZT350-GK front brake lever (machine addition)	1	
2	1100100-831000	ZT350-GK front disc main pump assembly（ϕ14）	1	Old model
3	1100101-835000	Disc brake pipe copper washer ϕ 15× ϕ 10.2 × 1.5 (5 pcs/after-sale)	2	
4	1251100-112000	Disc brake pipe bolt M10×1-22	1	32N·m
5	1100300-121051	ZT350T-K front disc brake main pump assembly (ϕ 14/without handle/dark gray)	1	New model

PROCEDURE:

●Front disc brake main pump

Fix the front disc brake main pump, remove the bolt ⑷ and copper pad ⑶ with a 12# sleeve, and do not disassemble if it does not need to be replaced. Always replace the tubing connector ⑧ at a high level to prevent air from entering the tubing and cause brake failure. Also clean oil should be removed to prevent dripping onto parts such as covers or mufflers. After replacement, be sure to hold the handle ⑴ continuously and tap the main pump ⑵ of the disc brake at the same time to eliminate a small amount of gas entering the brake oil circuit and confirm that the braking returns to normal.

●Handle

Rotate the adjusting nut ⑤ to adjust the distance between the handle and the handle rubber sleeve to adapt to the hand feeling of different drivers.

If the handle needs to be replaced, fix the bolt ④ with 5# inner hexagon socket tool, and then remove the nut ⑥ with 10# sleeve or double offset ring spanner; Remove the bolt ④ and then remove the handle ⑴.

●Add brake fluid

Before driving the motorcycle, check whether the brake fluid level is above the “LOWER” marking. If not, check the brake disc or brake disc for wear and whether there is any oil leakage or oil leakage in the brake system. Abnormal needs to add brake fluid.

The brake fluid can only be added after the motorcycle is fixed horizontally.

Remove the bolt ① with a Phillips screwdriver and remove the upper cover②, the cover plate③, and the seal gasket ⑦.

Add DOT4 brake fluid to 3/4 of the transparent observation window of the front disc brake master pump.

Be sure to clean the foreign body before reassembling it.

CAUTION:

●Periodically check that the fluid level of the brake fluid is at 3/4 of the observation window.

●If the liquid level is under "LOWER", check the brake disc wear and brake system for leaks.

●If you swallow the brake fluid, contact poison control center or hospital immediately; if you get into your eyes, seek medical attention immediately after flushing with clean water.

●Keep brake fluid away from children and pets.

●Do not flush the cup directly with high-pressure water.

●Do not mix water, dust, impurities, and silicic acid or petroleum-based liquids, as this may cause serious damage to the brake system.

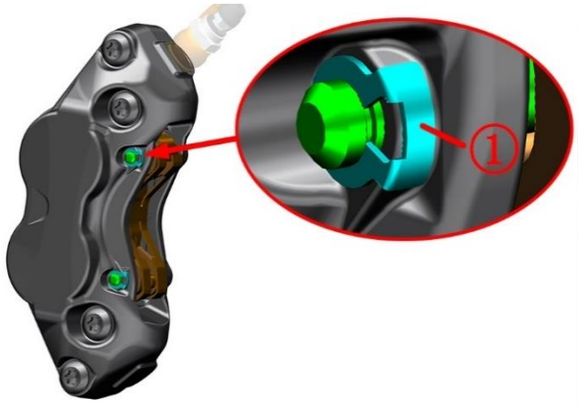

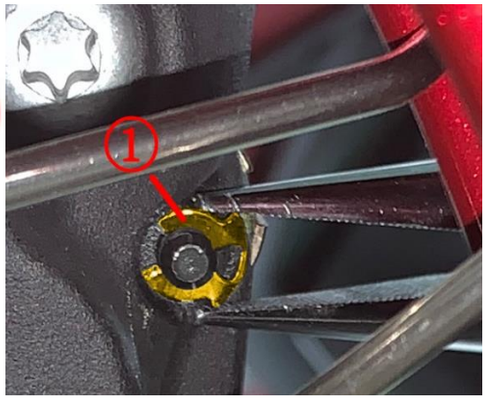

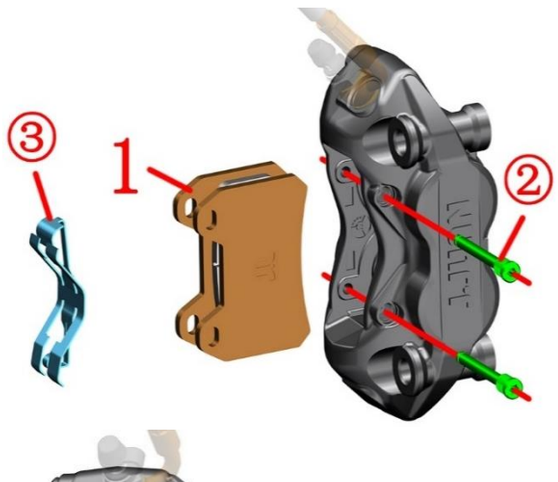

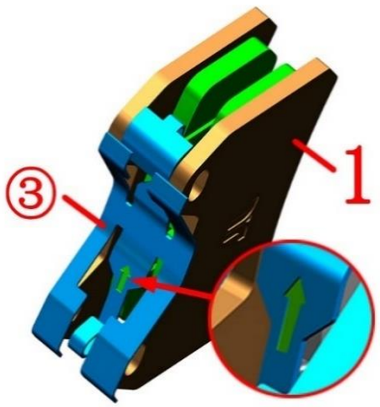

Fig.7 FRONT FORK COMPONENT		Replace the front brake pads	CHK ADJ	
NO.	PART NO.	PART NAME	QTY	CAUTION
1	1100100-827000	ZT350-GK front radial caliper brake pads (SBS-SI-104HH)	1	After-sales

PROCEDURE:

●Replace the front brake pad

Clamp the circlip ① with pointed nose pliers, pull it out and remove the two circlips.

Remove the upper pin shaft ② and then the lower pin shaft with T25 inner hexagon socket ring wrench.

Remove the spring plate ③ and the brake plate (1).

Clean the dust and other foreign matters on the outer edge of the piston and the pin shaft.

Use a cross screwdriver to remove the bolt ④ on the front disc brake main pump assembly, and remove the upper cover ⑤, cover plate ⑥ and sealant pad ⑦.

Push the piston all the way in the direction of the arrow.

Restore the front disc brake main pump assembly, and be sure to assemble it accurately.

Install the two brake pads (1) back into the caliper, and install the shrapnel (3) between the two brake pads. During assembly, the direction indicated by the arrow in the shrapnel shall be above.

Press and hold the plate body indicated by arrow ⑨ inward in the direction of the arrow, and insert the pin shaft ② into the hole to fix the brake pad (1). Tighten the pin shaft ② with T25 inner hexagon socket ring wrench.

Press and hold the plate body indicated by arrow ⑧ inward in the direction of the arrow, and insert the pin shaft ② into the hole to fix the brake pad (1). Tighten the pin shaft ② with T25 inner hexagon socket ring wrench.

Install the two circlips ① back onto the pin shaft. The buckle is assembled in place after it makes a sound. When assembling the circlip, pay attention that the flanging shall face outward. If the circlip is deformed, it can be corrected with a hammer with appropriate force.

Hold the brake handle repeatedly until the braking force is restored.

CAUTION:

●The motorcycle support should be fixed before operation.

●Check the brake discs and brake discs regularly for wear. Regularly check if the brake fluid level in the observation window of the front disc brake master pump is 3/4.

●It is strictly prohibited to disassemble the oil pipe bolts and gas discharge nozzle bolts when replacing the brake pads to prevent air from entering the pipeline and causing brake failure.

●Do not shake the front after disassembling the front brake oil cup cover to prevent the brake fluid from overflowing.

●After replacing the brake pads, the new brake pads should be operated for about 300 km to fully run in order to achieve the best braking effect. Take care to leave enough braking distance during running-in.

●It is recommended to replace brake pads in pairs with qualified maintenance units.

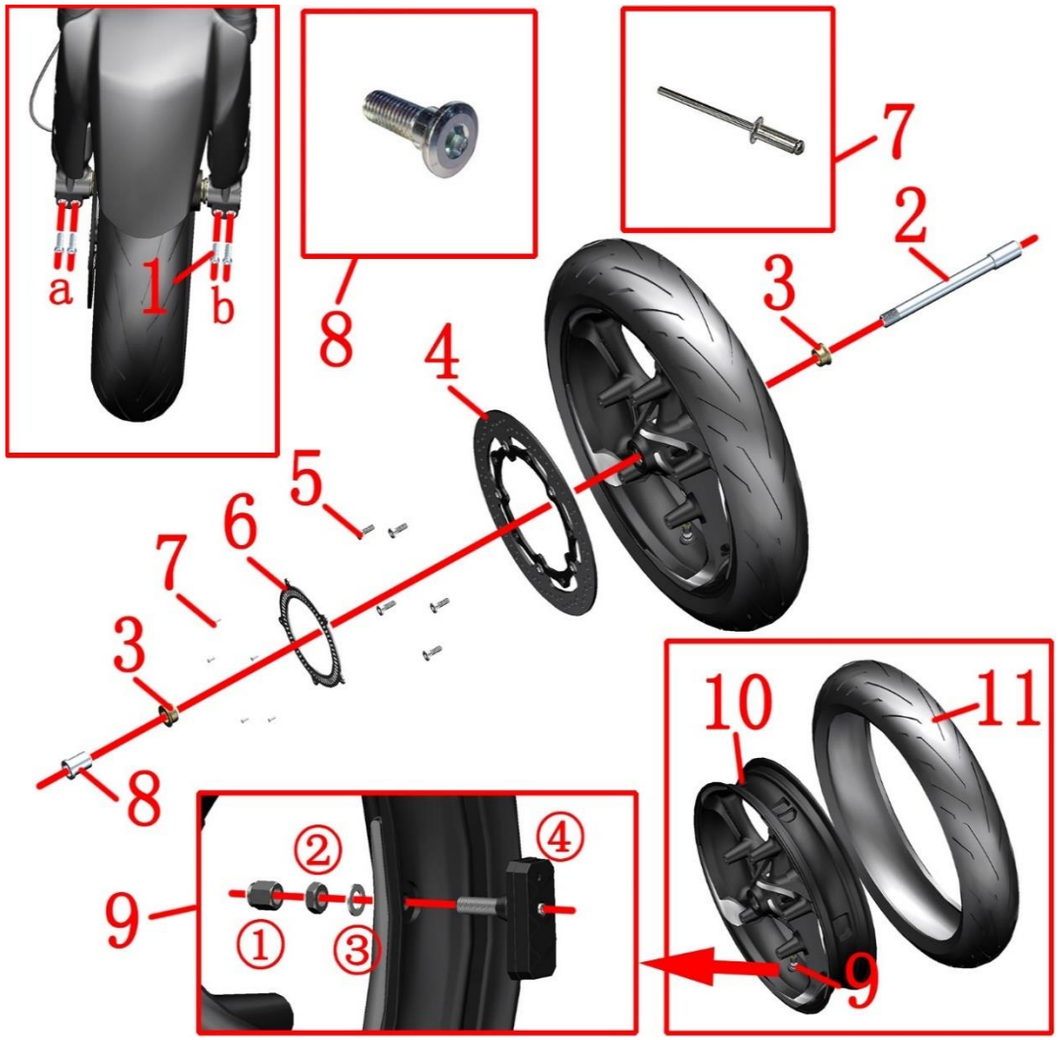

Fig.8 FRONT FORK COMPONENT		Front wheel component	CHK ADJ	
NO.	PART NO.	PART NAME	QTY	CAUTION
1	1250205-023000	GB70.1 inner hexagonal M8×35 (color Zinc)	4	20N·m
2	1094100-063000	ZT650 front wheel hollow shaft Φ20×243	1	
3	1274300-008000	ZT350-GK front wheel bushing (ϕ20×ϕ28×15.5/should	2	
4	1274300-007000	ZT350-GK ABS induction ring gear (60 teeth)	1	
5		Non-standard inner hex bolt M8×25	5	24N·m
6	1100100-783000	ZT350-GK front brake disc (320×5.0)	1	
7	1250402-002000	GB12615 ϕ3.2×9 rivet (stainless steel)	5	
8	1094100-037000	ZT250-R front wheel right fixed bushing	1	
9	1184300-057000	ZT350 tire pressure sensor N (M8 straight head)	1	
10	1094300-007021	ZT350-GK front aluminum wheel (MT3.5×17/black)	1	
11	1230100-558200	120/70ZR17 CM－S3N (58W) TL E4 IMARK	1	

PROCEDURE:

●Tire and wheel assembly

Remove the 2 bolts (1) on the left front shock absorber bottom b with the 6# Allen tool.Hold the front wheel first and then remove the hollow shaft (2) with the 17# internal hexagon tool,emove the left sleeve (3), and move the front wheel assembly downward to remove the right sleeve (7) and front wheel assembly. Finally, remove the right fixing sleeve (8) and use the hexagonal tool to remove the 2 bolts (1) of the right front shock absorber.

●Brake disc, ABS ring gear

Using 6# inner hexagon socket or T45 remove the bolt (5) .Protect the brake disc (4) around the rivet (7) with masking paper or double-sided adhesive tape, and then grind the rivet (7) off the drum with a small grinder, then take off the ABS ring gear(6) and the disc(4).

●Tire pressure sensor

Remove the valve cap① that comes with the tire pressure sensor,use a tool to release the air, and then use a professional tire puller to remove the rear tire (9), taking care to avoid the tire pressure sensor. Finally, use a 12# wrench to remove the valve nut ② and the flat washer ③, and then remove the tire pressure sensor.

CAUTION:

●Use a suitable tool to support the motorcycle to prevent accidents caused by dumping during disassembly.

●Take care when disassembling tires and rims to prevent damage to the material.

●After replacing the tire, check for leaks and balance.

●It should not be used because the tire self replenishment may block the air hole of the tire pressure monitoring sensor, resulting in inflation difficulty or tire pressure monitoring failure.

●Insufficient tire pressure may cause steering vibration, abnormal wear, etc.; summer tire pressure is too high there is a risk of puncture.

●Maintenance items

Tires: The tires should be regularly inspected for cracks, cracks, air pressure, etc. If the tread wear indicator the manual for details. When the outdoor temperature is too low, it is recommended to store the vehicle in a place with high temperature or indoors to prevent frost cracking. Normal temperature: 280kpa.

Rim: Check the rim for any deformation, cracks, etc. Rotate the rim horizontally to check for stuck, oscillating, etc.Rim seal ϕ42 × ϕ28 × 7; bearing model: 6004-2RS.

un in order to achieve the best braking effect. Be careful to leave enough braking distance during running-in.

Axle: Use a dial indicator to check for deformation and bending.

Brake disc: After replacing the brake disc, the new brake disc should be operated for about 300 kilometers to fully run in order to achieve the best braking effect. Be careful to leave enough braking distance during running-in.

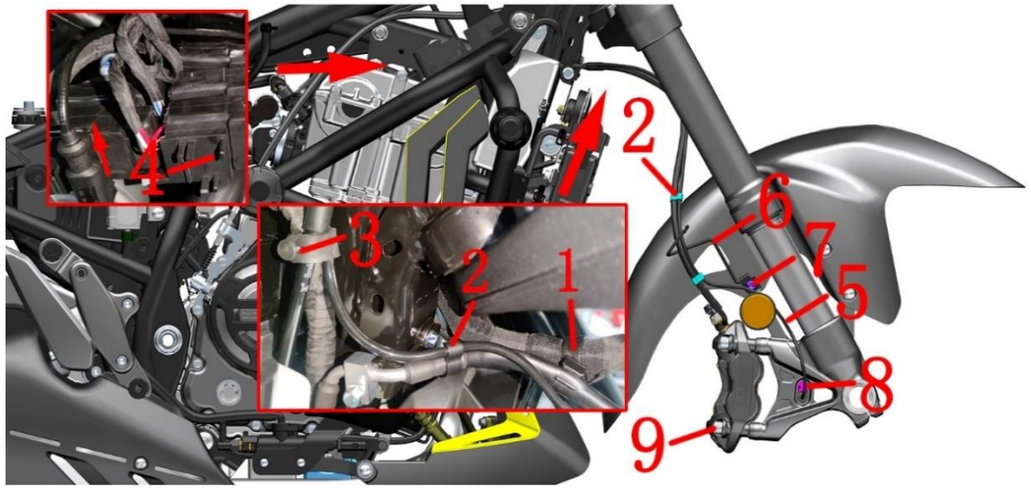

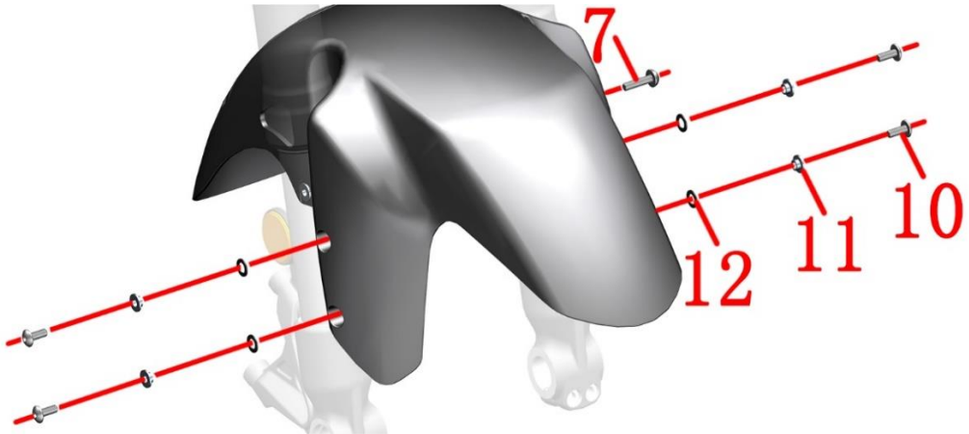

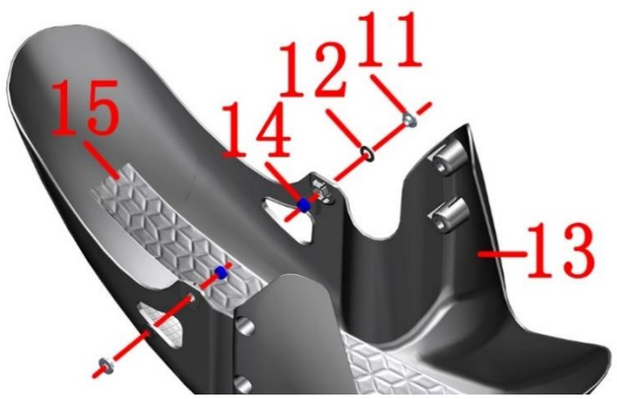

Fig.9 FRONT FORK COMPONENT		Front mudguard & wheel speed sensor component	CHK ADJ	
NO.	PART NO.	PART NAME	QTY	CAUTION
1	1010407-002000	Double hole clamp (Φ8.5 with Φ17.5)	1	
2	1224100-044000	Wheel speed sensor clamp	3	
3	1244300-119000	ZT310 rubber buckle (50mm)(5 pcs/after-sale)	1	
4	1224300-088000	ZT350-V1 EFI relay holder	1	
5	1181200-118000	Wheel speed sensor(A)	1	
6	1274300-134000	ZT350-V1 Front oil outlet pipe clamp	1	
7	1251100-364000	Non-standard bolt M6×25 (color/10.9 grade)	2	
8	1251100-101000	Non-standard bolt M6×12 (304 stainless steel)	1	
9	1251100-303093	GB70.1 Hexagon socket head bolt M10×1.5×60 (grade 12.9 / environmental protection color zinc)	2	
10	1251100-102000	Non-standard bolt M6×16 (304 stainless steel)	4	
11	1274100-155095	Flanged bushing ϕ6.2×ϕ8.4×3.5 + ϕ14×1.5(5 pcs/after	6	
12	1241200-124021	flanging bushing buffer rubber (ϕ8.5×ϕ14×1)(5 pcs/af	6	
13		Front mudguard	1	
14	1250301-049093	GB6170M6 (environmental color)(5 pcs/after-sale)	2	
15	1246200-058000	Anti-Vibration plate (500mm×80mm)	1	

PROCEDURE:

●Wheel speed sensor

Remove the wire clips(1), wire clips(2), and rubber wire buckles(3). Hold the fixed seat (4) with one hand, and pull out the plug of the wheel speed sensor (5) in the direction of the arrow with the other hand. Take the brake oil pipe and wheel speed sensor wire out of the wire clamp (6), remove the bolt (8) with a 4# hexagon socket, and take off the sensor (5).

Use a 6# hexagon socket to remove the right bolt (7), and take off the wire clip (6).

●Front disc brake caliper

Use a 8# hexagon socket to remove the bolts(9); let the caliper sag naturally, and it is strictly forbidden to invert the caliper. It is forbidden to invert the caliper to prevent the air from entering and causing the brake to fail.

●Front mudguard

Remove the 4 bolts (10) with the 4# hexagon socket by hand and remove the bushing (11) and cushion rubber (12). Using 6# hexagon socket remove the bolt(7) on the left side. Take off the bushing (11) and cushion rubber (12) and the nuts(14) . If the shockproof plate(15) needs to be replaced, heat it with a hot-air gun and remove it after the double-sided adhesive is softened.

CAUTION:

●Pay attention to the strength when disassembling the front mud plate to prevent scratching the paint surface.

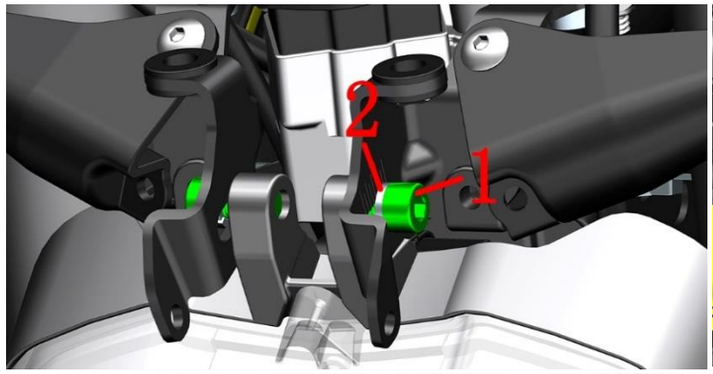

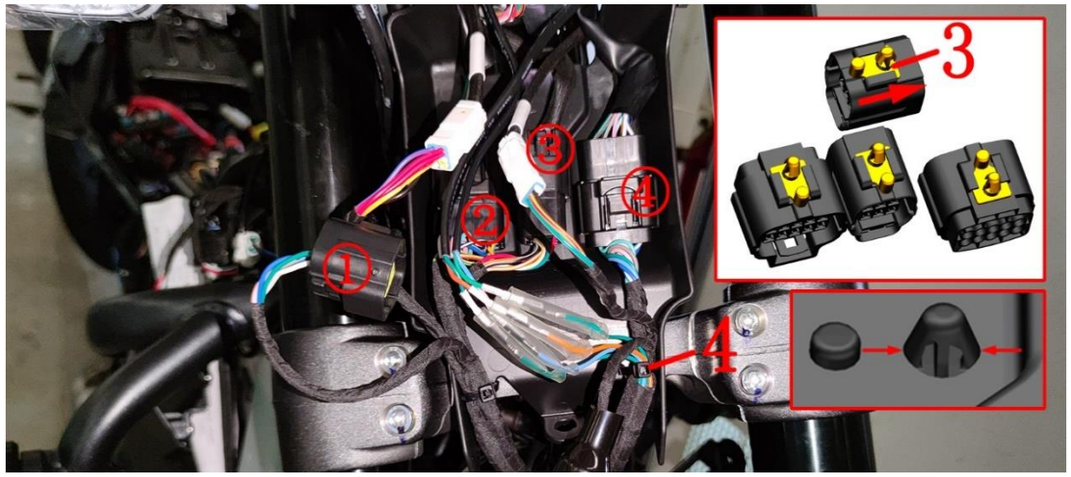

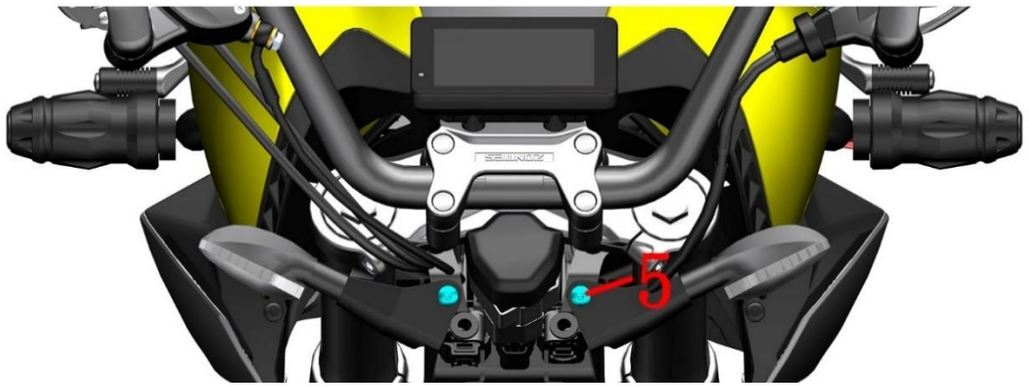

Fig.10 FRONT FORK COMPONENT		Headlights assembly 1	CHK ADJ	
NO.	PART NO.	PART NAME	QTY	CAUTION
1	1250205-040095	GB70.1 inner hex bolt M8×16(color Zinc)	2	
2	1250501-007093	GB93 ϕ8 (environmental color)	2	
3	1224200-008000	ZT310-R cable plastic staple	4	
4	1226000-218000	Grade 0 flame retardant tie (black 3.6×295)(5 pcs/afte	2	
5	1251100-102000	Non-standard bolt M6×16 (304 stainless steel)	2	

PROCEDURE:

●Headlights assembly

Refer to the steps of the front light adjustment to remove the decorative cover on the headlights and turn the turn signal assembly up.

Remove the bolts (1) on both sides with a 6# hexagon socket and remove the spring washer (2).

Turn the headlight assembly in the direction of the arrow; expose all cable connectors.

Cut two tie straps (4).

Pull the wire clip (3) from the back of the storage box with a pointed tip and pull it out of the storage box.

First pull out the turn signal line head ⑤.

Then separate all the plugs from the main cable and arrange all the cables.

Remove the line plug from the back of the 4 plugs, ① headlight, ② right hand switch, ③ faucet lock switch, and ④ left hand switch.

●Turn signal assembly

Remove the bolts (5) after grasping the left and right turn signal assemblies and remove them.

CAUTION:

●Pay attention to the strength when removing the line plug.

●Pay attention to all cables in the original wiring when reassembling.

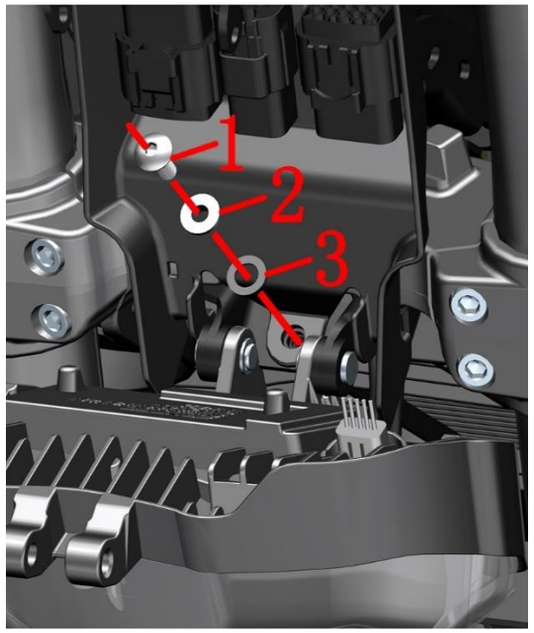

Early:

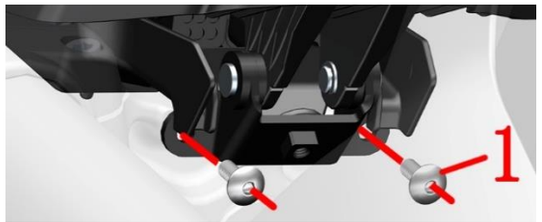

Now:

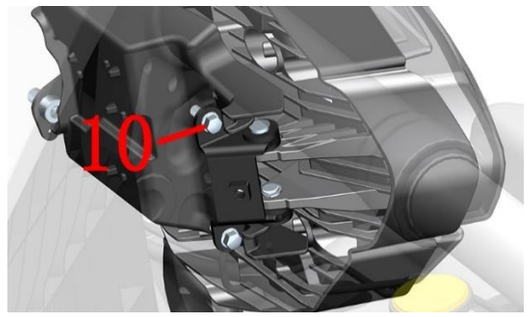

Fig.11 FRONT FORK COMPONENT		Headlights assembly 2	CHK ADJ	
NO.	PART NO.	PART NAME	QTY	CAUTION
1	1251100-102000	Non-standard bolt M6×16 (304 stainless steel)	1	
2	1274100-155095	Flanged bushing ϕ6.2×ϕ8.4×3.5 + ϕ14×1.5(5 pcs/after	1	
3	1241200-124021	flanging bushing buffer rubber (ϕ8.5×ϕ14×1)(5 pcs/af	1	
4	1251100-102000	Non-standard bolt M6×16 (304 stainless steel)	2	
5	1174300-002051	ZT350-V-A1 front headlight sets (titanium gold)	1	
6	1274200-133000	ZT310-V bracket under headlamp	1	
7	1240400-007000	HJ125-3 battery holder buffer aprons	2	
8	1264100-006000	ZT250-S Pedal circlip	2	
9	1274200-024000	ZT310-R Front light rotated pin	2	
10	1251112-001093	M6×16 Hexagon flange bolts (color zinc)	2	

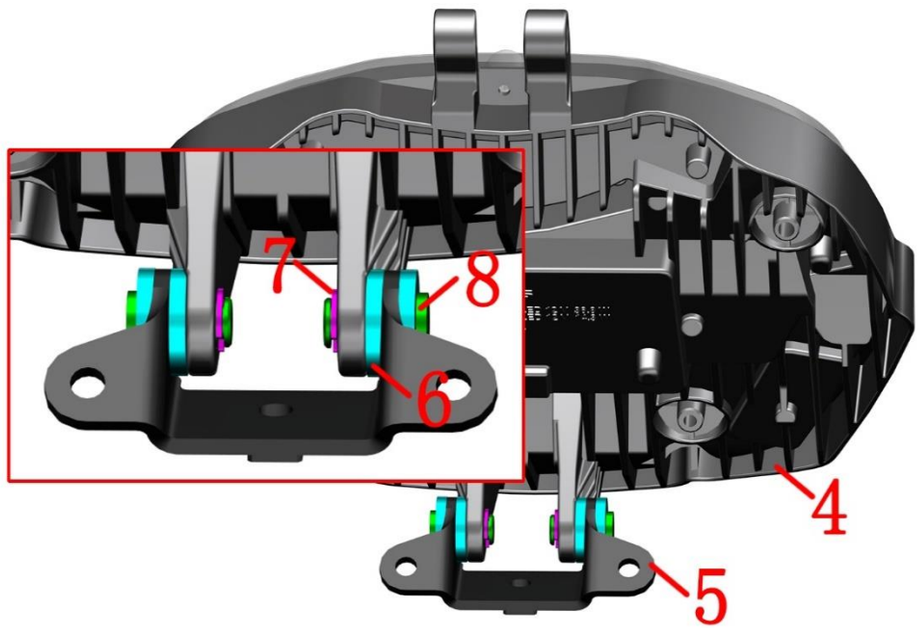

PROCEDURE:

●Headlight assembly

Turn the headlight assembly forward to expose the bolt at the bottom of the storage box, Using 4# inner hexagon socket remove the bolt (1),and remove the bushing (2) and cushion rubber (3).

Turn the headlight upside down, and remove the two bolts (1) at the bottom of the lower link plate with a 4# inner hexagon or use 8# sleeve remove the two bolts(10).

Remove the headlight assembly

Remove the two pin shanks (8) and remove the two pins (9)

Separate the headlights (5) from the bracket assembly

Remove two pieces of cushion rubber (7) from the bracket (6)

CAUTION:

●Protect protective measures to prevent scratching the lampshade or paint finish.

●The headlights use imported LED light sources. It is recommended not to change the internal structure of the headlights. It is forbidden to destroy the sealing structure of the headlights, prevent water mist from forming inside the lamps and affect driving safety.

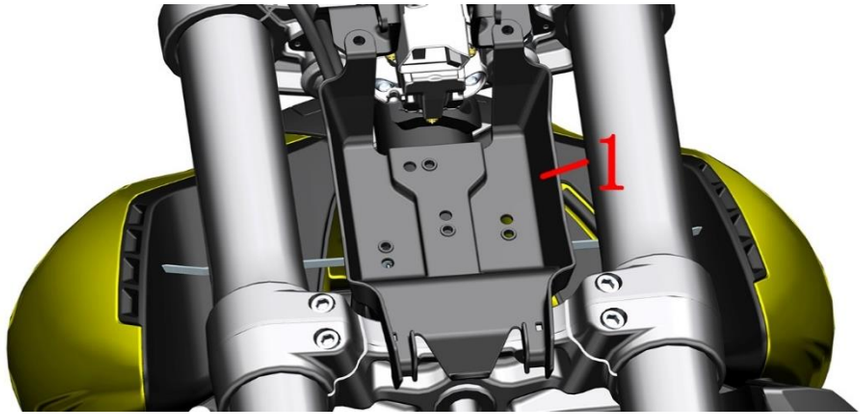

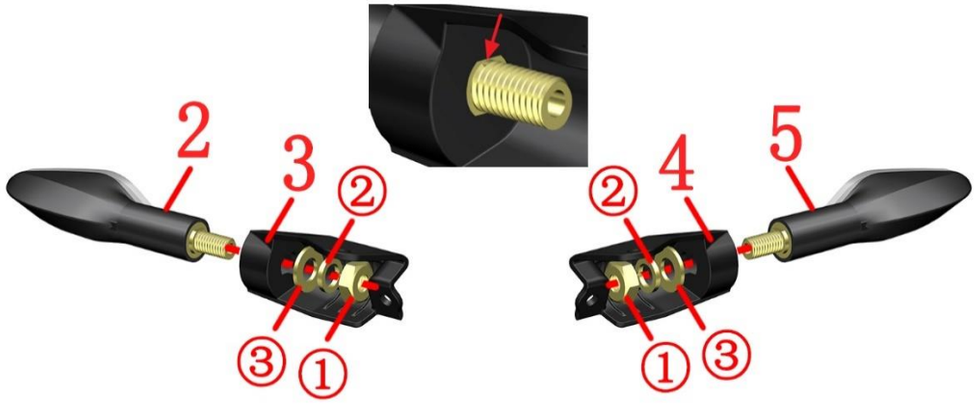

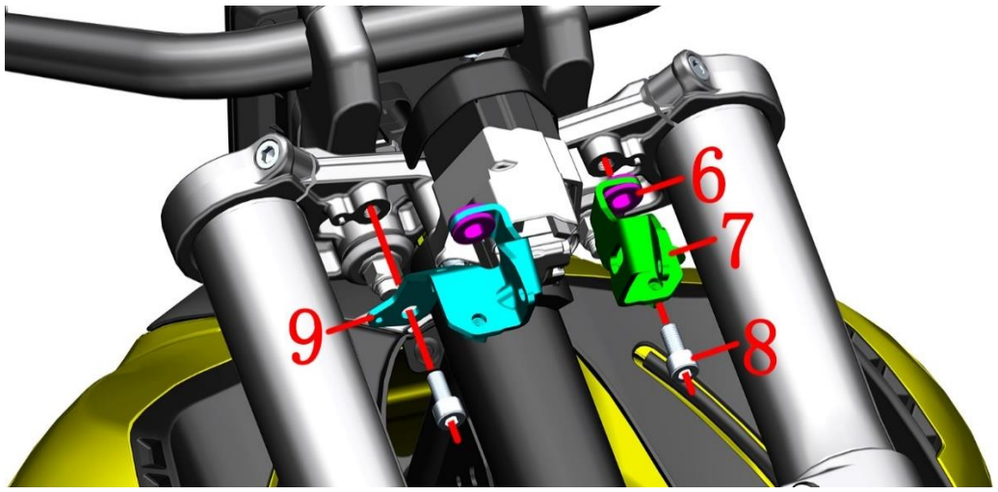

Fig.12 FRONT FORK COMPONENT		Headlights assembly 3	CHK ADJ	
NO.	PART NO.	PART NAME	QTY	CAUTION
1	1224200-121000	ZT310-V storage box	1	
2	1170300-063000	HJ125-K front left turn signal light	1	
3	1224200-122000	ZT310-V front turn signal left bracket	1	
4	1224200-123000	ZT310-V front turn signal right bracket	1	
5	1170300-064000	HJ125-K front right turn signal light	1	
6	1244100-137000	ZT250-S Flanging bushing buffer(5 pcs/after-sale)	2	
7	1274200-132000	ZT310-V headlamp left bracket	1	
8	1250205-040095	GB70.1 inner hex bolt M8×16(color Zinc)	2	
9	1274200-134000	ZT310-V headlamp right bracket	1	

●Storage box

Remove all the cables and remove the cable box (1)

●Turn signal assembly

Turn the turn signal assembly to the back, use the 17# open-end wrench to remove the nut ① that comes with the turn signal, and remove the spring pad ② and the gasket ③. Separate the turn signal from the bracket.

●Headlight bracket

Remove 2 pieces of cushion rubber (6)

Grasp the left bracket (7) or the right bracket (9) and then remove the bolt (8) with 6# inner hexagon.

CAUTION:

●When reassembling, check if there is any pressure on the wire to prevent it from tightening Short circuit caused by bolts. Pay attention to the lamp connector, do not insert the wrong, turn left Green + orange; right turn signal is green + blue.

●Note that the positioning boss on the turn signal corresponds to the slot on the bracket

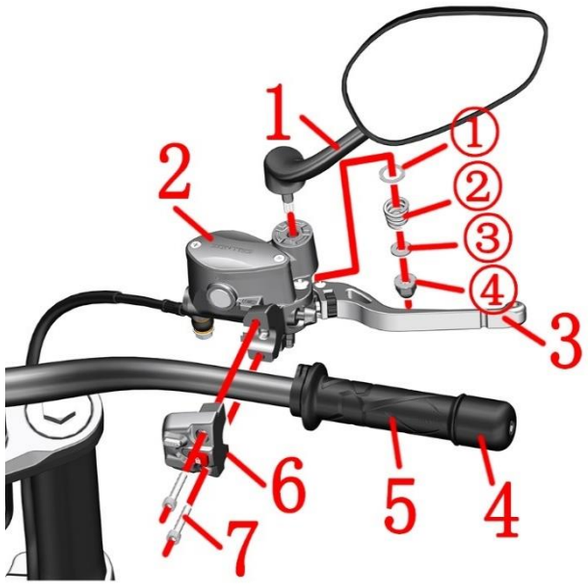

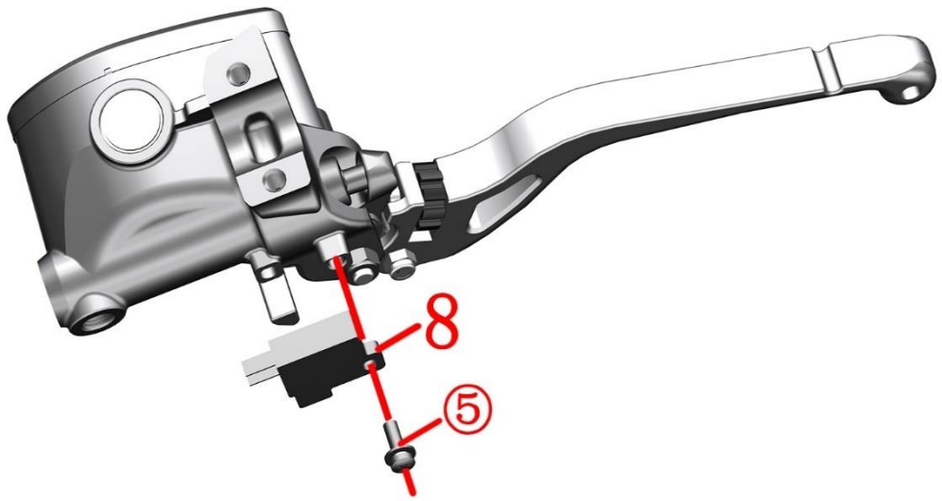

Fig.13 FRONT FORK COMPONENT		Right handlebar component	CHK ADJ	
NO.	PART NO.	PART NAME	QTY	CAUTION
1	1190100-409051	ZT310-VX right rearview mirror (dark gray)	1	
2		Front disc brake main pump assembly (ϕ14)	1	
3	1100100-833000	ZT350-GK front brake handle (CNC)	1	
4	1134300-018000	ZT350-R balance block (aggravated)	1	
5	1244100-140000	ZT250-R right handle bar rubber sleeve(after-sale)	1	
6	1186200-012000	ZT310T-M right hand switch (dark gray TFT-500)	1	
7	1250205-031091	GB70.1M6×30(stainless steel)	2	10N.m
8	1100100-583000	ZT310-T front brake switch	1	after sale

PROCEDURE:

●Rearview mirror

Hold the mirror stem in one hand, remove the nut ④ with a 13# sleeve, and remove the small pad ③, the spring ② and the large pad ①. Remove the mirror from the front brake master pump.

●Right handlebar to put rubber sleeve, balance block

Push the rubber sleeve (5) with the right handlebar to push forward to expose the upper balance block fixing hole; use the tool to press the convex parts at both ends of the elastic block on the balance block and pull out the balance block assembly (4), and then put the right handle Remove the rubber sleeve (5).

●Right handlebar half cover

Hold the front disc brake main pump (2) with one hand, and remove the bolt (7) with the 5# hexagon socket tool. Remove the wire plug connector of the sub switch (6) and pull it out.

●Front brake switch replacement

Unplug the brake switch

Remove the bolt ⑤ attached to the front brake main pump and replace the front brake switch. Note that the boss on the brake switch is aligned with the limit hole at the arrow indication of the front brake main pump.

CAUTION:

●The motorcycle should be fixed after horizontal support.

●Periodically check that the fluid level of the brake fluid is between 3/4 of the observation window.

●Do not flush the cup directly with high pressure water.

●When assembling the balance block, align the protruding parts at both ends of the shrapnel with the fixing holes on the handle and then insert the direction into the holes.

●The small spacer of the rear view mirror anti-rotation limit slot needs to be aligned with the slot on the mirror bar bolt.

●The right handlebar refers to the switch to replace the throttle line.

●The joint between the front disc brake main pump and the half cover should be aligned with the right hand to match the triangle on the switch.

●The old model will be discontinued: the old switch can be replaced directly with the new one.

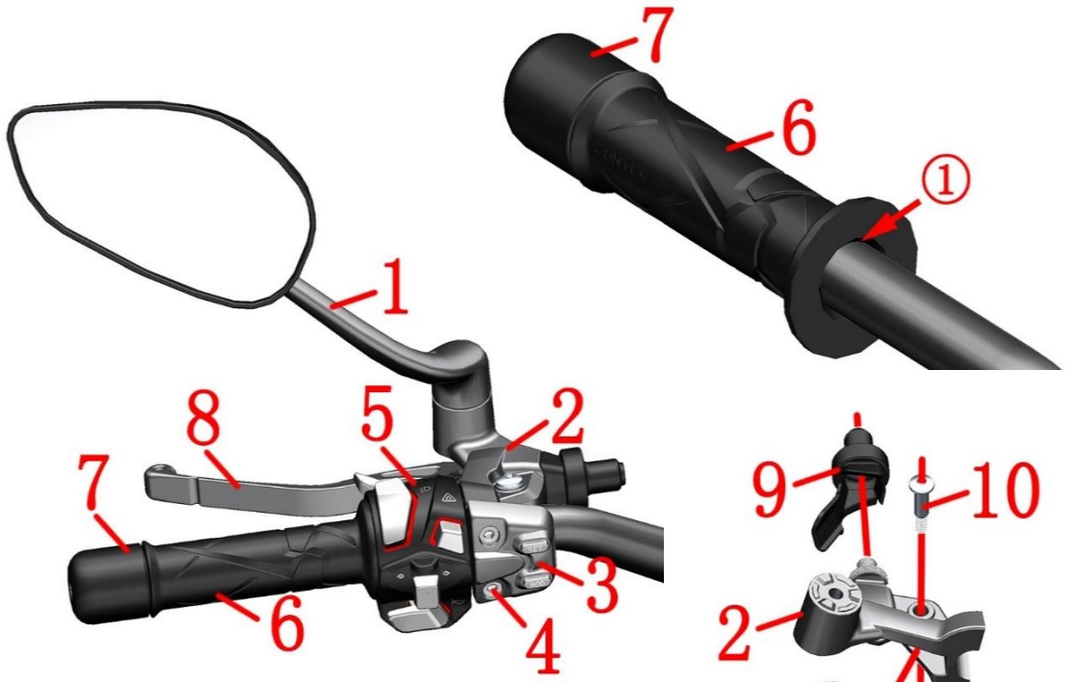

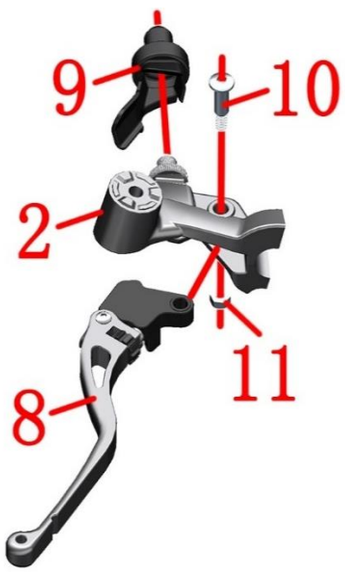

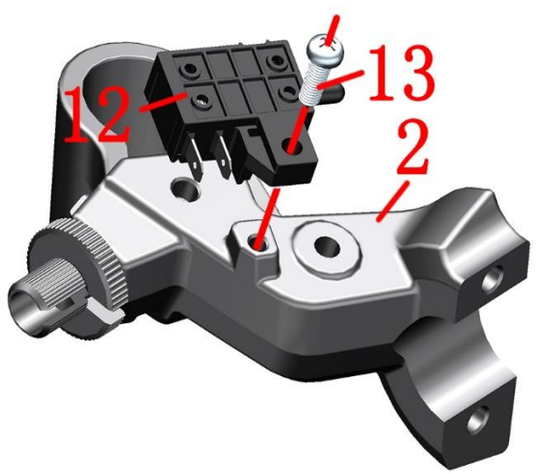

Fig.14 FRONT FORK COMPONENT		Left hand component	CHK ADJ	
NO.	PART NO.	PART NAME	QTY	CAUTION
1	1190100-408051	ZT310-VX left rearview mirror (dark gray)	1	
2		Left hand handle rocker arm seat assembly	1	
3	1184300-019000	ZT350-R left counter handle switch(dark gray TFT-500)	1	
4	1250205-031091	GB70.1M6×30(stainless steel)	2	10N.m
5	1184200-184000	ZT310-V1 Left handle switch	1	
6	1244100-139000	ZT250-R left hand rubber sleeve(after-sale)	1	
7	1134300-018000	ZT350-R balance block (aggravated)	1	
8		Left handle rocker arm	1	
9		Clutch cable sheath	1	
10	1251100-198000	Non-standard hexagon socket bolt M6×13-ϕ8×20 (env	1	
11	1251300-073000	GB/T6185 hexagonal nylon lock nut M6 (environment	1	
12	1184200-170000	ZT310-V clutch switch	1	
13	1250201-039000	GB818 cross recessed pan head screw M4×12(color Zinc)	1	

PROCEDURE:

●Left rear view mirror, left switch, rocker arm

Remove the clutch line by referring to the “Replace Clutch Line” procedure. Remove the left rear view mirror(1), rocker base(2), left sub switch(3), bolt(4), left switch(5), and rocker arm(8) by referring to the steps in "Right Handle Assembly" and "Add Brake Fluid, Adjusting Rocker Arm".

●Left hand rubber sleeve and balance block assembly

Use a blow gun to blow the left hand grip between the rubber sleeve(6) and the direction handle tube while moving the rubber sleeve inward until the balance block positioning hole is exposed. Use the tool to press the convex part at both ends of the elastic piece on the balance block and pull out the balance block assembly(7). Use a blow gun and move the outer sleeve to remove the left hand grip(6).

●Replace the left hand rocker arm and clutch switch

Fix the bolt(10) with a 5# hexagonal tool, then remove the nut(11) with a 10# sleeve or a wrench, remove the bolt(10) and then remove the left hand rocker arm(8). First unplug the clutch switch, then remove the bolt(13) with a Phillips screwdriver and remove the clutch switch(12). The rotation adjustment nut can adjust the distance between the rocker arm and the left hand rubber sleeve to adapt to the feel of different drivers.

CAUTION:

● Press during reassembly: the left hand grip rubber sleeve - balance block - switch - left hand rocker arm - left rear view mirror. Note the triangle symbol on the rocker arm assembly and the half cover seam alignment switch.

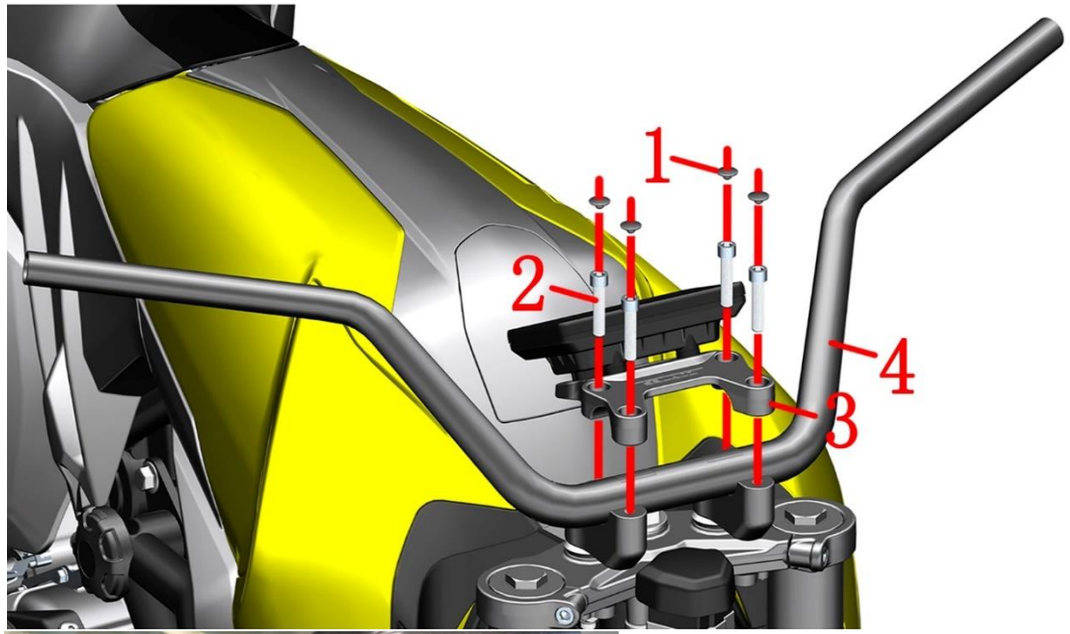

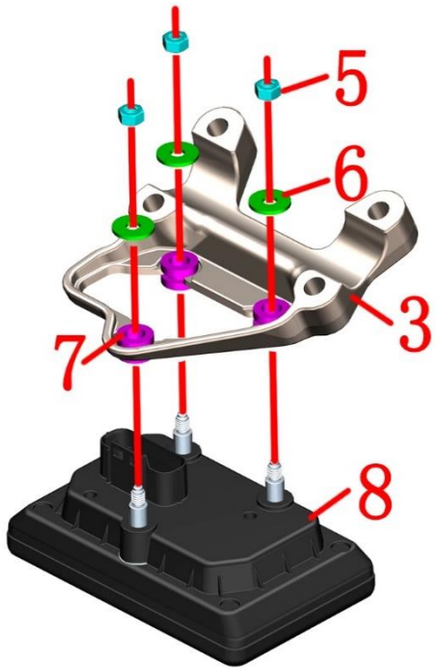

Fig.15 FRONT FORK COMPONENT		Direction handle&TFT Instrument	CHK ADJ	
NO.	PART NO.	PART NAME	QTY	CAUTION
1	1224100-093051	ZT250-S M8 bolt decorative buckle (matte gray /WX)	4	
2	1250205-034093	GB70.1 inner hexagonal M8×30 (color Zinc)	4	
3	4094200-001051	ZT310-V direction clamp(dark gray matte)	1	
4	1134300-019051	ZT350-VX direction handlebar (dark gray matte)	1	
5	1250301-049093	GB6170M6 (environmental color)(5 pcs/after-sale)	3	8～12N.m
6	1250502-010093	GB96.1 ϕ6(environmental color)	3	
7	1244200-203000	ZT310TFT Instrument Buffering Gasket (5 pieces / afte	3	
8	1164300-003000	ZT350-R/V universal TFT instrument	1	

PROCEDURE:

●Directional components

Lift the rubber cap of the instrument cable,press the limit buckle of the plug and pull it down.

Use a blade to pick up the decorative buckle (1), hold the direction handle (4) in one hand, and remove the bolt(2) with a 6# hexagonal tool in one hand; remove the clamp (3) and finally remove the direction handle (4).

●Instrumentation components

Turn the meter and the pressure block assembly to the back and use a 10# sleeve to remove the nut (5), remove the gasket (6), and remove the meter (8). Take care to protect the meter screen.

Remove the cushion rubber (7) from the direction of the clamp (3).

CAUTION:

●Protect protective measures to prevent scratching the appearance of the instrument case and the decorative cover

●Pay attention to the strength when opening the decorative cover clip to prevent the staple from breaking due to excessive force.

●When assembling the clamping block, please tighten the two bolts at the front first, and then tighten the bolts at the rear (close to the fuel tank side). Wrong sequence or diagonal locking may break the briquette.

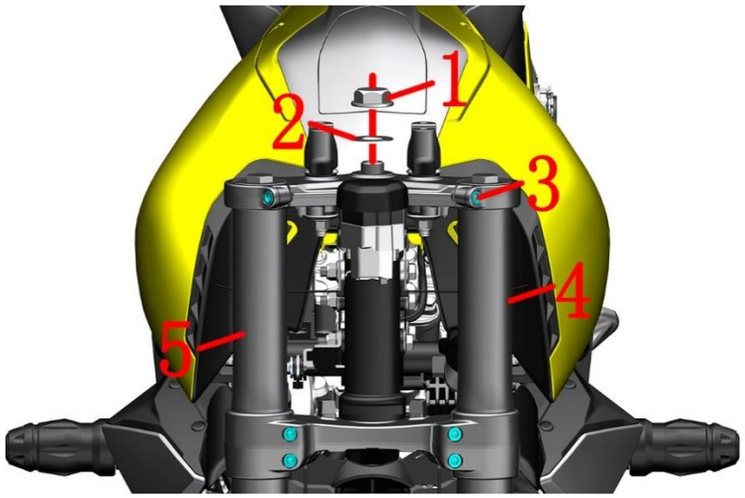

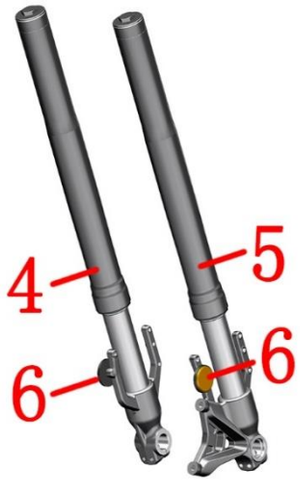

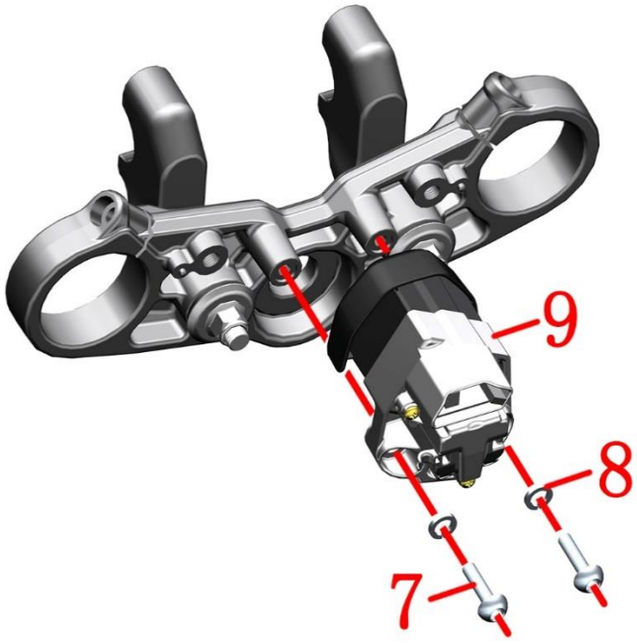

Fig.16 FRONT FORK COMPONENT		Front shock absorber, upper plate component	CHK ADJ	
NO.	PART NO.	PART NAME	QTY	CAUTION
1	1251300-088000	ZT350-R Upper connecting plate decorative nut M22×	1	
2	1251500-100000	ϕ22.5×ϕ39×1 gasket (chrome plated)	1	
3	1250205-034093	GB70.1 inner hexagonal M8×30 (color Zinc)	6	25N.m
4		Front Left Shock Absorber	1	
5		Front right shock absorber	1	
6	1176000-044000	Side reflector (KM-106) (After-sales)	2	
7	1251100-364000	Non-standard bolt M6×25 (color/10.9 grade)	2	
8	1250501-007093	GB93 ϕ8 (environmental color)	2	
9	1184200-139000	ZT310 main lock (electromagnetic drive/wire length 150) assembly	1	

PROCEDURE:

●Uplink board assembly

Use a 30# sleeve to remove the nut (1), and remove the gasket (2).

Use 6# inner hexagon to remove the upper link plate bolt (3).

●Front left and right shock absorption

Using 4# inner hexagon socket remove the bolts(3) of the lower plate,and hold the shock absorber in the middle with one hand. Insert a slotted screwdriver into the slot of the upper and lower plates to slightly enlarge the slot clearance, and disassemble the left shock absorber (4) and the right shock absorber(5). under. Remove the upper plate assembly.

●Reflecting film

Rotating the reflector(6) counterclockwise and take off it.

●Faucet lock

Remove bolt (7) with 6# inner hexagon, and remove spring washer (8) and faucet lock (9).

CAUTION:

●Use a flat-blade screwdriver to enlarge the gap between the upper and lower joint plates without applying excessive force to avoid damage.

●The vehicle support should be fixed during the disassembly process to prevent accidents caused by dumping.

● For the disassembly of the lower board components, see "Steering Adjustment" above, which will not be repeated here.

Old model:

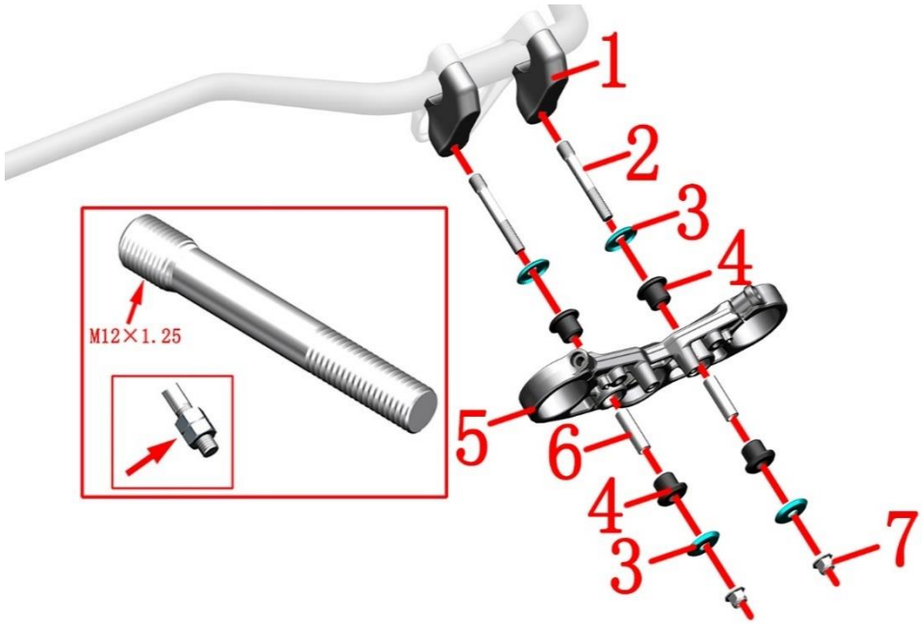

New model:

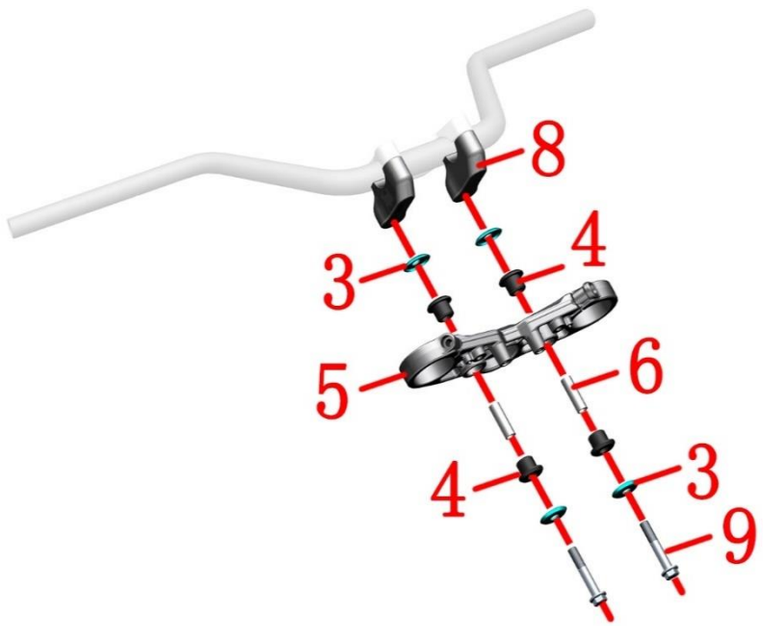

Fig.17 FRONT FORK COMPONENT		Uplink plate, direction handle block component	CHK ADJ	
NO.	PART NO.	PART NAME	QTY	CAUTION
1	4094300-004051	ZT310-V direction handlebar pad M12×1.25(dark gray matte/spray paint)	2	
2	1251111-006000	ZT310-R double head screw	2	
3	1274200-018000	ZT310-R gasket of upper connecting board	4	
4		Buffer rubber of upper connecting board	4	
5		Upper connection board (dark gray matte)	1	
6		Bushing	2	
7	1251300-057093	Non-standard nut M10×1.5(Dacromet)	2	40N.m
8	4094200-008051	ZT310-V direction handlebar pad M10×1.25(dark gray matte/spray paint)	2	
9	1250105-280000	GB5789 M10×1.25×60 (level 10.9 dacromet)	2	

PROCEDURE:

●Uplink plate and spacer assembly

In order to facilitate the direction of the block, the direction and the upper block should be assembled first to prevent the block from rotating during the disassembly process. The direction should be wrapped with cotton or other soft materials to prevent scratching the paint surface.

Old model:Remove nuts (7) with a 14# sleeve,remove the gasket(3), cushion rubber(4), and bushing (6).Remove the upper plate(5).

If you need to replace the double studs separately, you can lock the two M10×1.5 nuts to each other as shown in the small figure and then use the sleeve to turn clockwise to remove the studs. When replacing a new stud, you must apply a threaded fastening to prevent loosening. It is necessary to ensure that the assembly is in place and firm, and we are not responsible for any damage caused by improper assembly.

The spacer(1), the upper clamp and the direction handle are disassembled.

New model:Remove bolts(9) with a 14# sleeve,remove the gasket(3), cushion rubber(4), and bushing (6).Remove the upper plate(5).Remove the upper plate(5).

CAUTION:

●Protect protective measures to prevent scratching the appearance of parts.

●When reassembling, it is necessary to use the direction to ensure that the center and direction of the spacers on both sides are coaxial with the center. First install 4 pieces of cushioning rubber into the upper plate and then install the bushing separately. Make sure that the bushing is flush with the cushioning rubber, otherwise it should be reassembled. When tightening the nut, ensure that the torque is 40N.m. Check the buffer for spillage and reassemble if necessary.

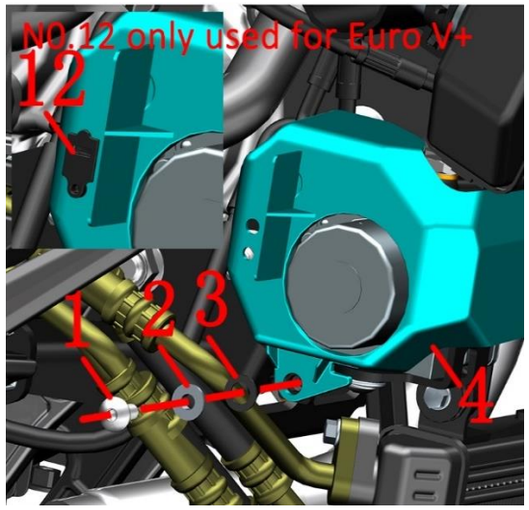

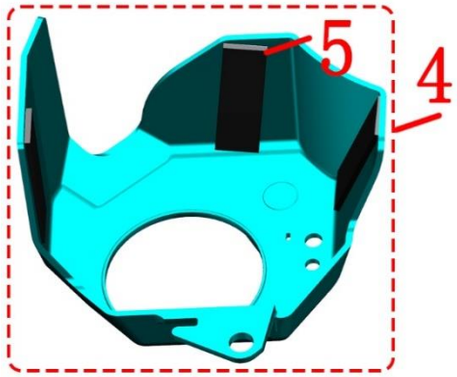

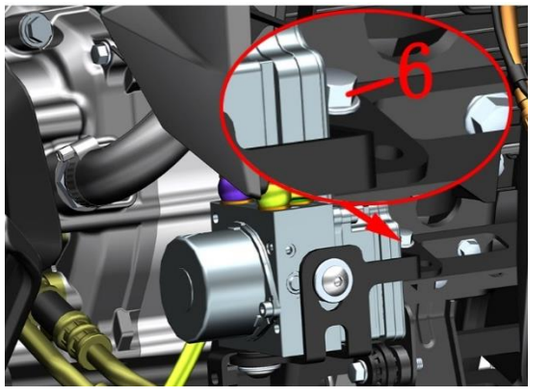

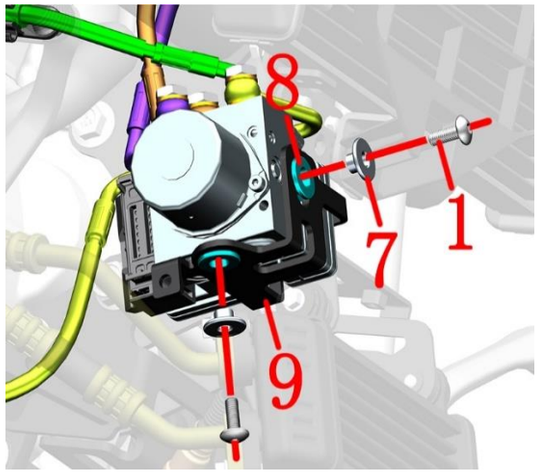

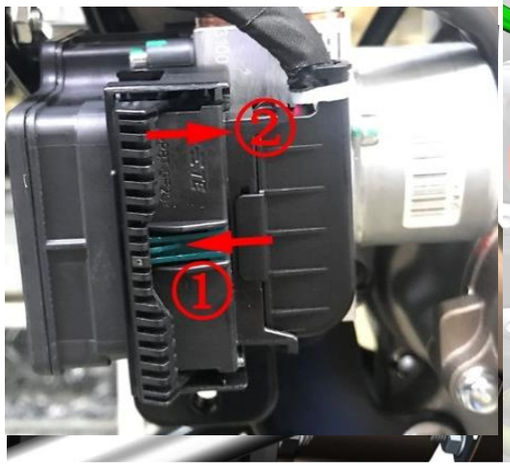

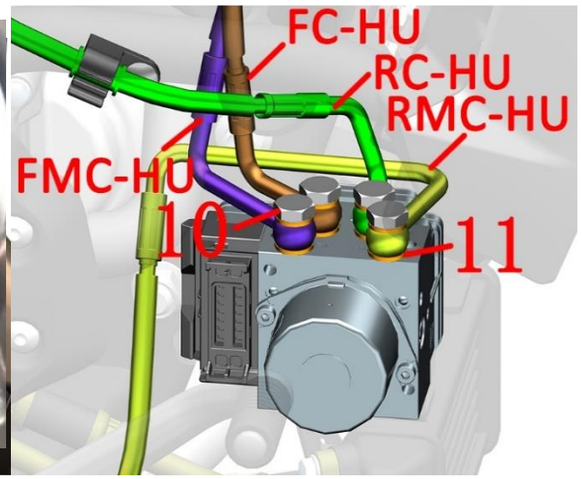

Fig.18 FRONT FORK COMPONENT		ABS brake system-1	CHK ADJ	
NO.	PART NO.	PART NAME	QTY	CAUTION
1	1251100-102000	Non-standard bolt M6×16 (304 stainless steel)	4	
2	1274100-155095	Flanged bushing ϕ6.2×ϕ8.4×3.5 + ϕ14×1.5(5 pcs/after	1	
3	1241200-124021	flanging bushing buffer rubber (ϕ8.5×ϕ14×1)(5 pcs/af	1	
4	4044302-332000	ZT350-VX hydraulic control unit protective cover assembly (MES)	1	Pasted sponge rubber pads
5	1240100-520000	3M sponge rubber pad (50×15×2)(5 pcs/after-sale)	1	
6	1251112-001093	M6×16 Hexagon flange bolts (color Zinc)	1	
7	1274101-015000	ZT250-S flanging sleeve(ϕ6.4×ϕ9×6 + ϕ20×2)(5 pcs/af	2	
8	1244100-137000	ZT250-S Flanging bushing buffer(5 pcs/after-sale)	3	
9		ZT350-VX hydraulic control unit bracket	1	
10	1100101-837000	Disc brake oil pipe hexagon head bolt M10 × 1 × 20 (after-sale)	1	
11	1100101-835000	Disc brake pipe copper washer ϕ 15× ϕ 10.2 × 1.5 (5 pcs/after-sale)	2	
12	1224200-282000	ZT350-R cable plastic staple(after-sale)	1	Euro V+

PROCEDURE:

●Hydraulic control unit cover

Refer to the steps of removing the shroud assembly to remove it first. Remove bolt (1) with 4# inner hexagon on the right side, remove the bushing (2) and the cushion rubber (3).

Remove the protective cover assembly.Remove the protective cover assembly. Three sponge rubber pads (5) are pasted on the protective cover (4).

●Hydraulic control unit

Remove the bolt (6) with 8# sleeve and pull out the hydraulic control unit assembly.Using 4# inner hexagon socket remove the two bolts(1)and remove the bushing (7).Take off the bracket component,if needed take off 2 pcs cushion rubbers (8) from the bracket(9).

●Brake fluid

Place an oil pan to collect wasted brake fluid under the ABS hydraulic control unit.Unplug the hydraulic contral unit connector protective sleeve then

After wearing waterproof gloves, pull out the hydraulic control unit and tilt it to the right, remove the bolts (10) with a 14# sleeve， take off the copper washer(11) and 4pcs oil pipes. After draining the brake fluid, remove the hydraulic control unit and wipe off the oil stain. Be careful not to let the brake fluid contact the cable connector to prevent poor contact due to corrosion.

RC-HU is connected to the hydraulic control unit and rear brake caliper; RMC-HU is the rear disc brake main pump; FC-HU is the front disc brake caliper; FMC-HU is the front disc brake main pump.

●FMC-HU

The oil pipe, front disc brake main pump, rocker arm assembly and disassembly refer to the previous steps in "Adding brake fluid and rocker arm adjustment".

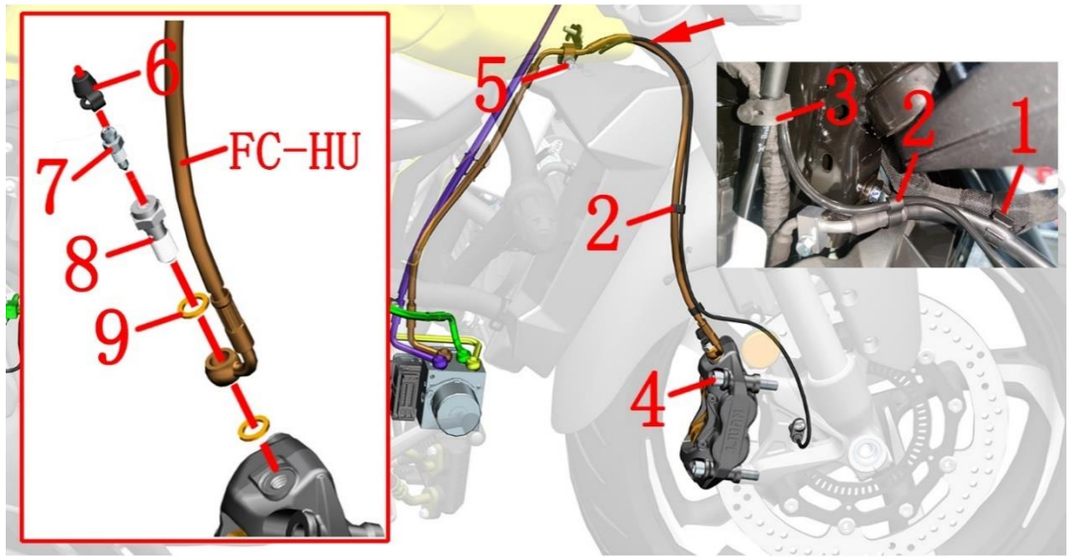

Fig.19FRONT FORK COMPONENT		ABS brake system-2	CHK ADJ	
NO.	PART NO.	PART NAME	QTY	CAUTION
1	1010407-002000	Double hole clamp (Φ8.5 with Φ17.5)	1	
2	1224100-044000	Wheel speed sensor clamp	3	
3	1244300-119000	ZT310 rubber buckle (50mm)(5 pcs/after-sale)	1	
4	1251100-303093	GB70.1 Hexagon socket head bolt M10×1.5×60 (grade 12.9 / environmental protection color zinc)	2	
5	1250105-138093	GB5789M6×20 (environmental color)	1	
6	1100100-936000	Caliper bleeder screw rubber cap	1	
7	1100100-895000	Disc brake bleeder screw M6	1	
8	1251100-307000	Disc brake oil pipe bolts M10×1×22 (with exhaust threaded holes)	1	
9	1100101-835000	Disc brake pipe copper washer φ 15× φ 10.2 × 1.5 (5 pcs/after-sale)	2	
10	1251112-001093	M6×16 Hexagon flange bolts (color Zinc)	1	
11	1274300-065000	ZT350-VX front oil outlet pipe bracket	1	

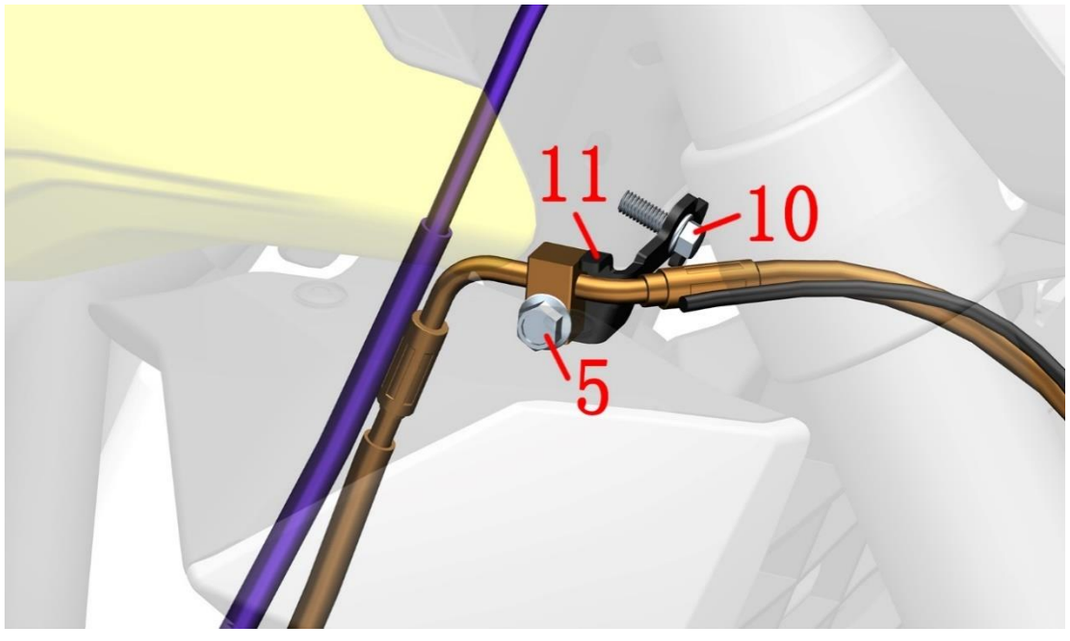

PROCEDURE:

●FC-HU

Place the oil pan under the front disc brake caliper.

Remove the wire clamp (1), wire clamp (2) and wire buckle (3) according to the steps of "front mud plate & wheel speed sensor assembly".

Remove two bolts(4) with 8# inner hexagon socket to remove the front disc brake caliper from the front shock absorber.

First uncover the screw rubber cap(6), wear waterproof gloves, then remove the bolt(7) with 8# ring wrench, remove the bolt(8) with 14# ring wrench, and remove the copper washer(9).

Remove the bolt(5) with 10# sleeve,take off the FC-HU oil pipe,It need to replace the 4 pcs copper washers (9) at the same time when replacing the tubing.

Wipe the end faces of the hydraulic control unit and the main pump of the front disc brake before replacing the fc-hu oil pipe. After installing the oil pipe, add DOT4 brake fluid and exhaust the brake system. See adding brake fluid for detailed steps.

●Front disc brake tubing bracket

If you need to remove the oil pipe bracket (11) ,use 8# sleeve remove the bolt(10) then take it off.

CAUTION:

●Be sure to disassemble the muffler and engine after they have cooled down completely. The horizontal support of the vehicle should be fixed before disassembly and assembly work.

●The precautions for brake fluid are described in the previous section.

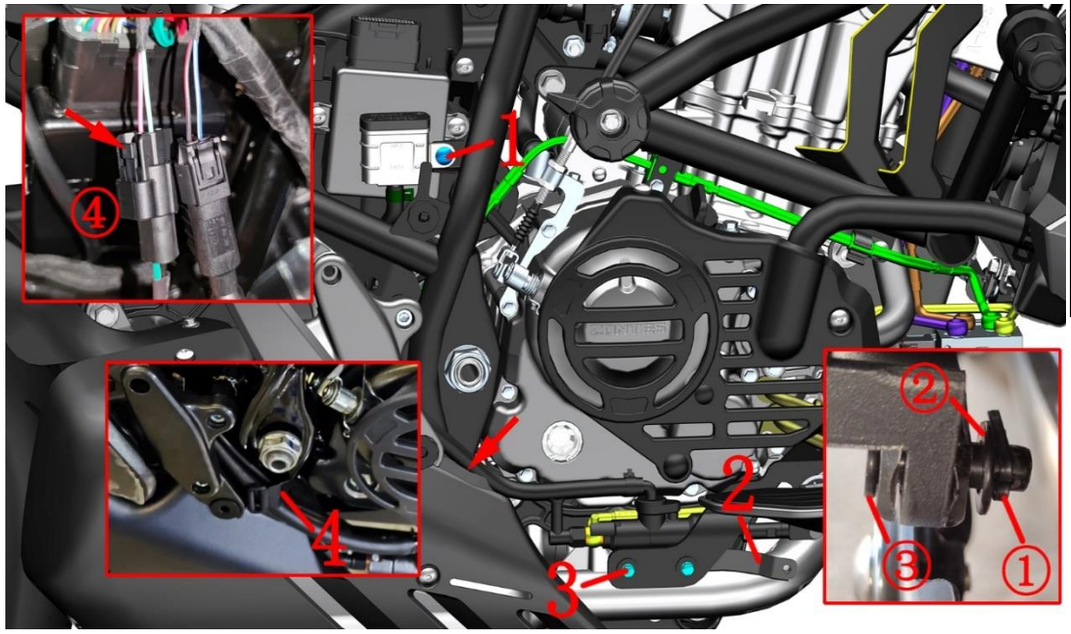

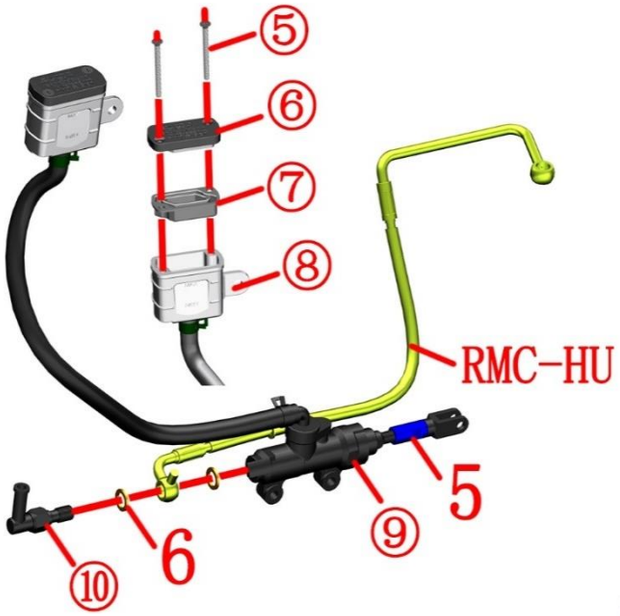

Fig.20FRONT FORK COMPONENT		ABS brake system-3	CHK ADJ	
NO.	PART NO.	PART NAME	QTY	CAUTION
1	1251100-101000	Non-standard bolt M6×12 (304 stainless steel)	1	
2	1274300-063000	ZT350-V1 lower docorative cover right bracket	1	
3	1250104-019097	GB16674M6×40 (chrome/HH)	2	
4	1224300-110000	Reverse buckle Velcro strap (20×200mm)	1	
5	1100100-858000	ZT350-V1 rear brake main pump piston push rod extension rod	1	
6	1100101-835000	Disc brake pipe copper washer φ 13× φ 10.2 × 1.5 (5 pcs/after sale)	2	

PROCEDURE:

●Brake fluid

Locate and unplug the rear brake switch connector near the oil cup of the main pump of the rear disc brake. Break the split pin ① straight and remove it. Remove the gasket ② and remove the pin shaft ③.

Remove the tie (4) and remove the bolt (3) with 8# sleeve to remove the main pump assembly of rear disc brake.

Place the oil pan under the main pump of the rear disc brake.

After wearing waterproof gloves, remove the bolt ⑤ with a cross screwdriver.

Remove the oil cup cover ⑥ and sealant pad ⑦.

Loosen the rear brake switch nut ⑩ with 14# open-ended wrench and drain the brake fluid. Remove the hoop at the main pump with pliers and pull out the oil pipe. Remove the rear brake switch wire and the copper washer (6).

Separate RMC-HU oil pipe and rear disc brake main pump body ⑨.

Remove the bolt (1) with 4# hexagon socket and remove the oil cup and oil pipe.

CAUTION:

●Be sure to disassemble the muffler and engine after they have cooled down completely. The horizontal support of the vehicle should be fixed before disassembly and assembly work.

●The precautions for brake fluid are described in the previous section.

●It is recommended to replace the two copper washers (6) at the same time when replacing the oil pipe, rear brake switch wire or disc brake main pump.

●The rear brake switch wire is prohibited from rotating the rubber cap at the arrow indication. Replace this switch wire. Be careful not to wrap the cable around the tool.

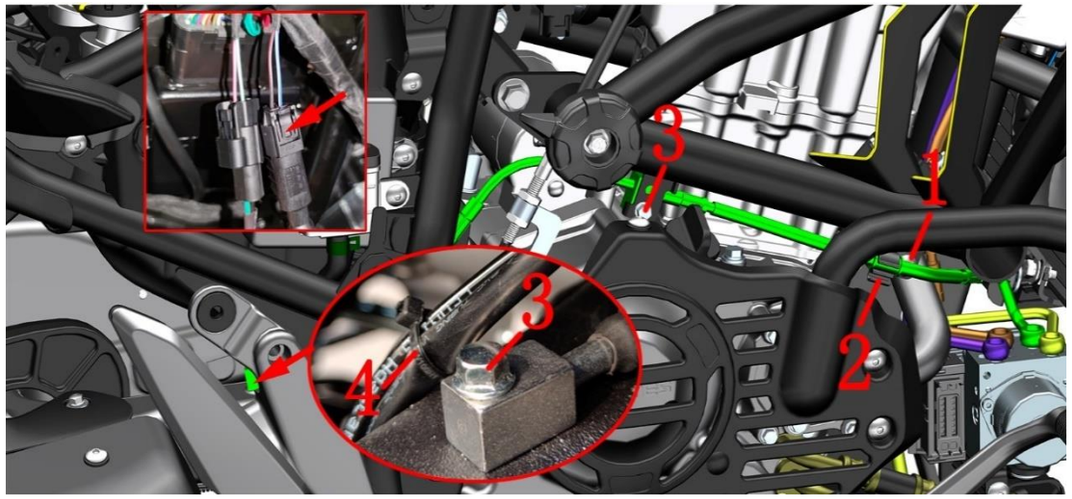

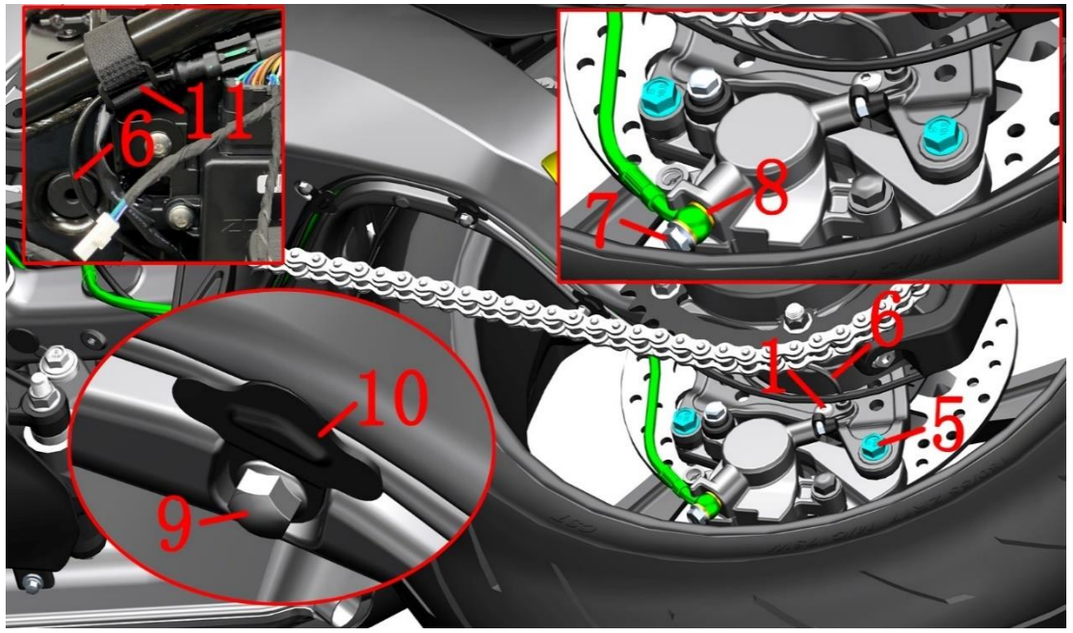

Fig.21FRONT FORK COMPONENT		ABS brake system-4	CHK ADJ	
NO.	PART NO.	PART NAME	QTY	CAUTION
1	1251100-101000	Non-standard bolt M6×12 (304 stainless steel)	2	
2	1224200-003000	ZT310-R Rear disc brake pipe clamp	1	
3	1251100-061093	M6×22 Hex flang bolt thread level 8.8 (color Zinc)	2	
4	1224100-051000	0 level fire-retardant belting (black2.5×100)	1	
5	1251100-123093	Non-standard bolt M8×25 (color Zinc)	2	
6	1181200-118000	Wheel speed sensor(A)	1	
7	1251100-112000	Disc brake pipe bolt M10×1-22	1	
8	1100101-835000	Disc brake pipe copper washer φ 15× φ 10.2 × 1.5 (5 pcs/after sale)	2	
9	1250104-006097	GB16674M6×12 (chromed/HH)	4	
10	1274200-119000	Single rocker rear flat fork tubing bracket	4	
11	1224300-110000	Reverse buckle Velcro strap (20×200mm)	1	

PROCEDURE:

●RC-HU Oil Pipe

Rear disc brake calipers placed under the oil pan

In the previous step, release the brake fluid. Loosen the bolt connecting the RC-HU oil pipe and the hydraulic control unit.

Use an 8# sleeve to remove the bolt (3) at the right guard bar, and take the front section of the oil pipe out of the wire clamp(2).

Use an 8# sleeve to remove the bolt (3) on the upper right front part of the rear flat fork, and cut off the cable tie (4).

After wearing the waterproof gloves, remove the bolt (7) with a 12# sleeve; remove the copper washers (8),If you need to replace the RC-HU tubing, it is recommended to replace the two copper washers (8) at the same time;the bolt(7) can be replaced if they are not damaged.

Use an 8# sleeve to remove the 4 bolts (9) and remove the 4 oil pipe supports(10).If need to remove the speed sensor,unplug the connector then remove the strap(11),using 4# hexagon socket remove the bolt (1),then take off it.

Take off the RC-HU brake hose.

●Rear disc brake caliper

Use a 14# sleeve to remove 2 bolts(5) to take off the rear disc brake caliper.

CAUTION:

●Be sure to disassemble the muffler and engine after they have cooled down completely. The horizontal support of the vehicle should be fixed before disassembly and assembly work.

●The precautions for brake fluid are described in the previous section.

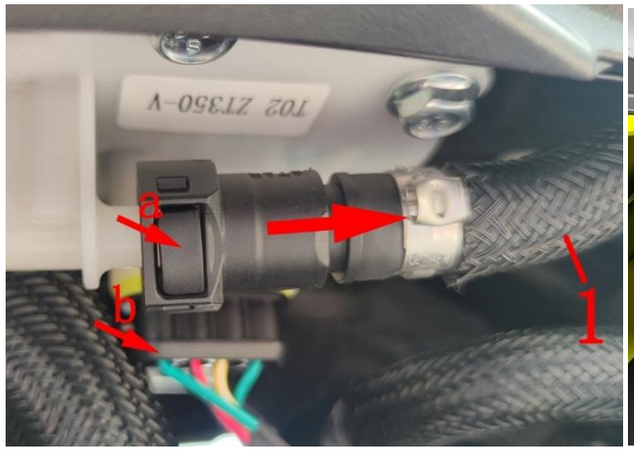

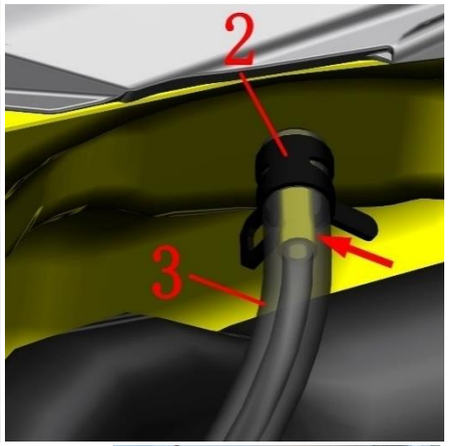

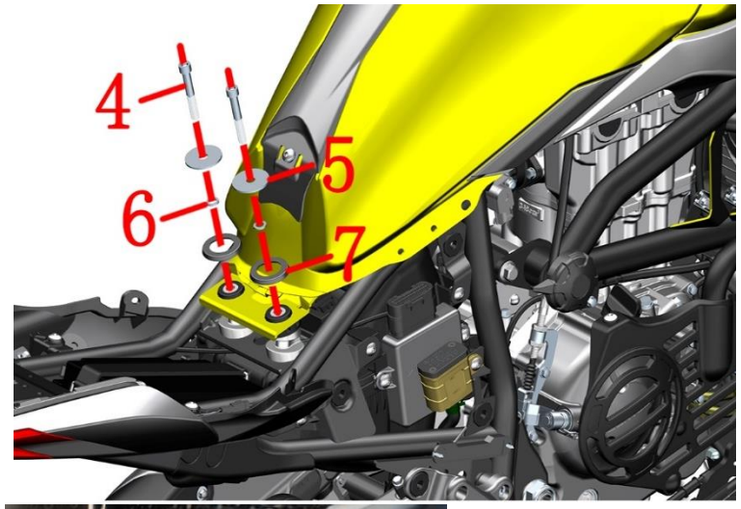

Fuel tank lock plug

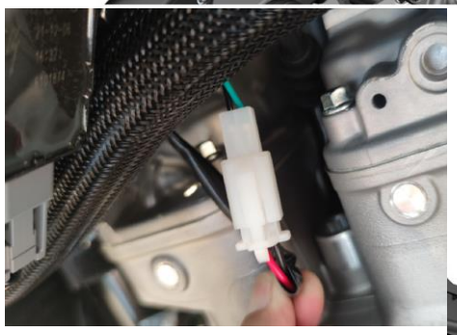

USB plug

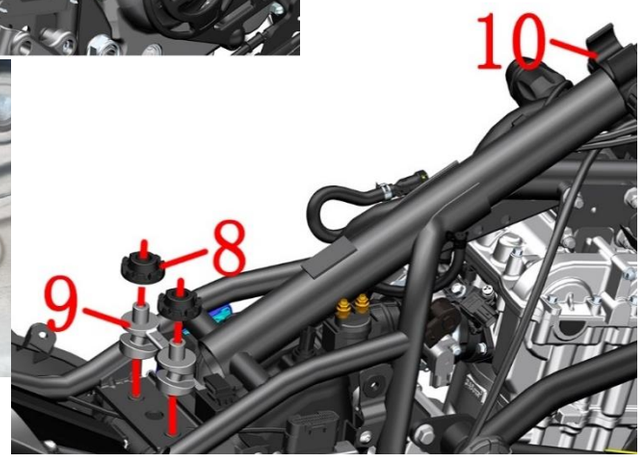

Fig. 1 FUEL TANK COVER COMPONET		Fuel tank assembly	CHK ADJ	
NO.	PART NO.	PART NAME	QTY	CAUTION
1	1050954-027000	ZT310-V EFI high-pressure tubing assembly	1	
2	1276001-057000	ZT310 water pipe clamp(ϕ10.5)(after-sale)	1	
3	1244200-095000	ZT310-V canister tube adsorption (Φ5 x Φ 11)	1	
4	1250205-043093	GB70.1M8×55(environmental color)	2	
5	1251900-028093	ZT250-R fuel tank flat pad ϕ9×ϕ37.5×2 (color Zinc)	2	
6	1251500-081000	Non-standard flat pad ϕ13×ϕ8.2×1.5 (color Zinc)	2	
7	1244100-020000	ZT250-S tank pressure glue	2	
8	1244100-053000	ZT250-S fuel tank gasket	2	
9	1274100-080000	ZT250-R cushion fixing block	1	
10	1244100-019000	ZT250-S fuel tank spacing glue	1	

PROCEDURE:

●Fuel tank assembly

Open the fuel tank cover first, and do not close it during the subsequent disassembly.If you accidentally close it, you can find the fuel tank lock plug near the auxiliary water tank. After connecting, re-open the fuel tank cover.

Place the oil pan on the left side under the high pressure oil pipe (1), and press the limit buckle at the direction indicated by the arrow "a" at the same time,pull out the axial direction of the big arrow to the rear of the vehicle,and pay attention to the radial force so as not to damage the oil pump outlet.

Use a pair of pliers to clamp the hoop slightly at the bottom of the right tank and move it down about 30mm, leaving the boss on the tank snorkel.Adsorption tube (3) Remove from the fuel tank.

Using 6# inner hexagon socket remove the bolts (4), remove the flat pads (5) and (6); and press the glue (7).

Pull the fuel tank assembly slightly behind the rear and lift the rear of the fuel tank assembly up.Do not lift too high to prevent fuel from escaping from the snorkel.

Unplug the cable plug b of the oil pump.

Continue to pull the fuel tank assembly back out of the limit rubber(10) and lift it up in parallel,find and uplug the USB charging cable and the fuel tank lock plug on both sides of the head of the fuel tank assembly.

Remove the fuel tank gasket (8), the seat cushion fixing block (9), and the tank liner limit rubber from the frame.

CAUTION:

●The fuel tank should be protected during the disassembly process to prevent damage to the paint surface.

●Before disassembling the fuel tank assembly, it is recommended to use the oil pump to pull out the fuel or use off the fuel

●Fireworks, telephone calls should not be allowed near the motorcycle -removal workshop to prevent accidents.

●A small amount of fuel leaks when pulling out the high pressure tubing subassembly, and should prevent the fuel from dripping to the outside of the engine or the muffler.

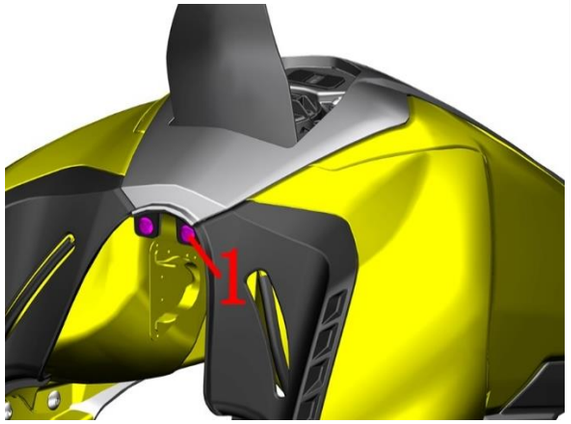

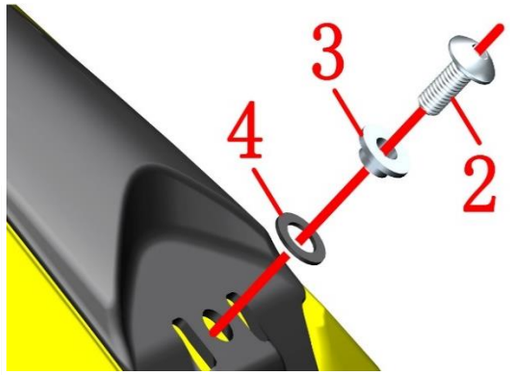

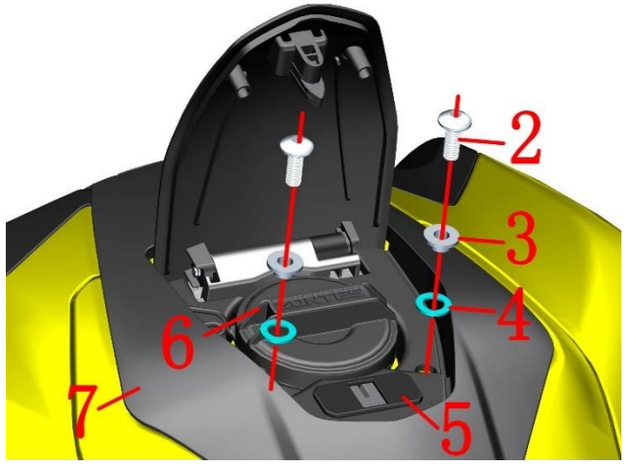

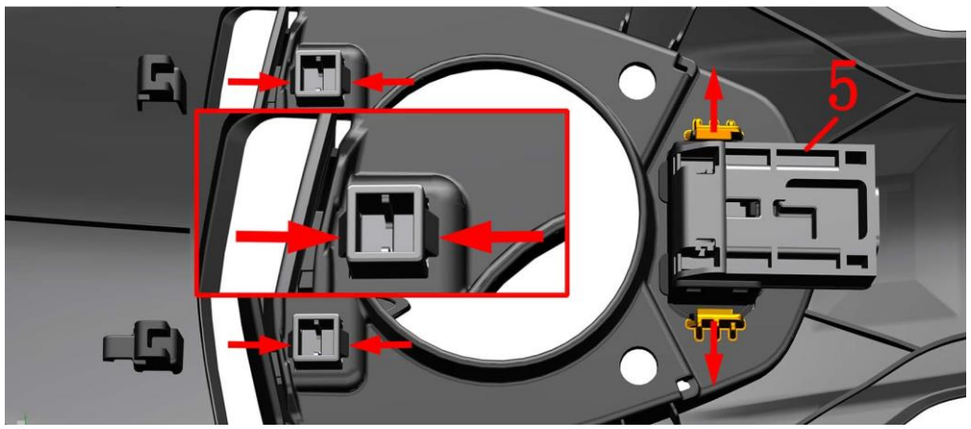

Fig. 2 FUEL TANK COVER COMPONET		Fuel Tank middle cover assembly	CHK ADJ	
NO.	PART NO.	PART NAME	QTY	CAUTION
1	1224100-089000	ZT250-S Expansion nail(5 pcs/after-sale)	2	
2	1251100-102000	Non-standard bolt M6×16 (304 stainless steel)	3	
3	1274100-155095	Flanged bushing φ6.2×φ8.4×3.5 + φ14×1.5(5 pcs/after-sale)	3	
4	1241200-124021	hanging bushing buffer rubber (φ8.5×φ14×1)(5 pcs/after-sale)	3	
5	1184200-002000	ZT310 electronic fuel tank lock	1	
6	1224100-033000	ZT250-S thread cap of the fuel tank	1	
7	4044201-262052	ZT310-V fuel tank cover (dark gray)	1	

PROCEDURE:

●Tank middle cover assembly

Remove the two expansion pins (1) of the head.

Using 4# inner hexagon socket remove the bolt (2) at the rear of the middle cover and remove the bushing (3) and cushion rubber (4).

Using 4# inner hexagon socket remove the bolt (2) at the fuel tank cap and remove the bushing (3) and cushion rubber (4).

Take off the fuel tank cap(6).

Pull firmly from the round hole of the tank cover to hear the sound, then grab the sides of the middle cover and lift it up, and pull the fuel tank lock cable from the hole in the middle of the cover.

Put the fuel tank cap (6) back into the fuel tank to prevent fuel volatilization and foreign matter from falling into the tank.

●Fuel tank lock

Flip to the back and use a flat-blade screwdriver to carefully open the middle cover (7) to buckle at both ends, remove the fuel tank lock (5), pay attention to the strength to prevent damage to the buckle.

●Fuel tank cover assembly

Use a needle-nose pliers to clamp the buckle of the swivel bracket with a little force to clamp, remove the cover assembly, and take care of the strength to prevent damage.

CAUTION:

●The fuel tank should be protected during the disassembly process to prevent damage to the paint surface.

●Pay attention to the force when removing the buckle to prevent damage to the buckle.

●Fireworks, telephone calls should not be allowed near the motorcycle -removal workshop to prevent accidents.

●A small amount of fuel leaks when pulling out the high pressure tubing subassembly, and should prevent the fuel from dripping to the outside of the engine or the muffler.

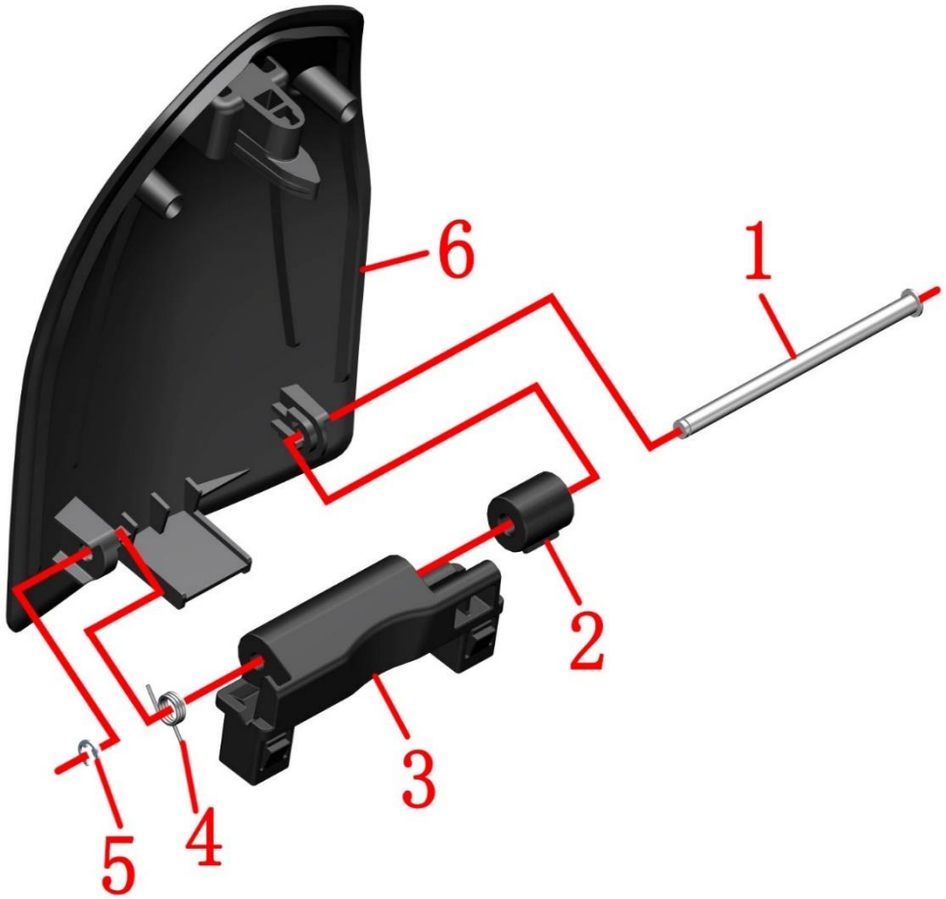

Fig.3 FUEL TANK COVER COMPONET		Change engine oil	CHK ADJ	
NO.	PART NO.	PART NAME	QTY	CAUTION
1	1274101-016000	ZT250-S rotating axle of fuel tank outside cover(after-sale)	1	
2	1224100-014000	ZT250-S tank cover spinning damping	1	
3	1224200-126000	ZT310-V tank cover rotating bracket	1	
4	1260100-255000	ZT250-S torsion spring of tank outer cover rotating shaft	1	
5	1260100-469000	ZT310-T storage box cover rotating shaft limit circlip(5 pcs/after-sale)	1	
6	4044201-238052	ZT310-V fuel tank cover (dark gray)	1	

PROCEDURE:

●Fuel tank cover assembly

Remove the retaining spring (5) attached to the rotating shaft (1) and slowly pull out the rotating shaft.
Remove the torsion spring (4) first.
Remove the swivel bracket assembly.
Remove the rotary shaft (1) from the tank cover (6)
Remove the damper (2) from the swivel bracket (3).

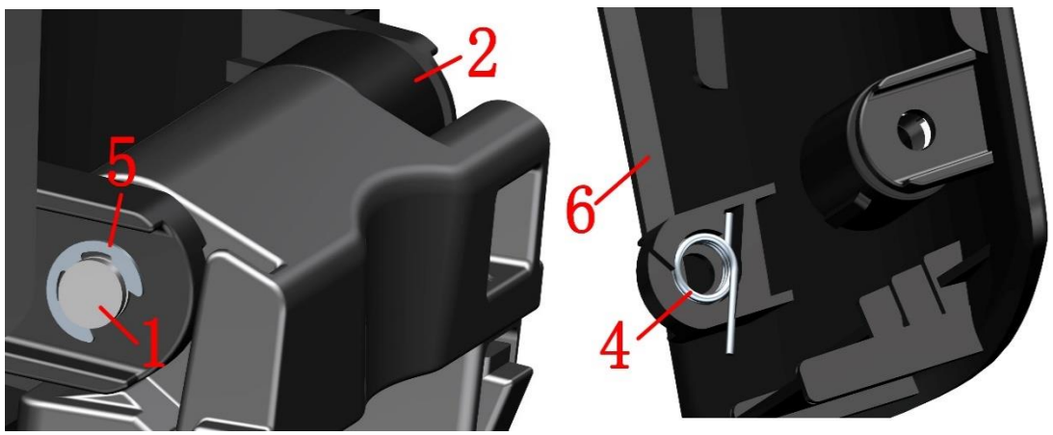

CAUTION:

●The parts should be protected during the disassembly process to prevent damage to the paint surface.
●Pay attention to the force when removing the buckle to prevent damage to the buckle.
●When reassembling, note that the torsion spring and damper need to be properly assembled in place.

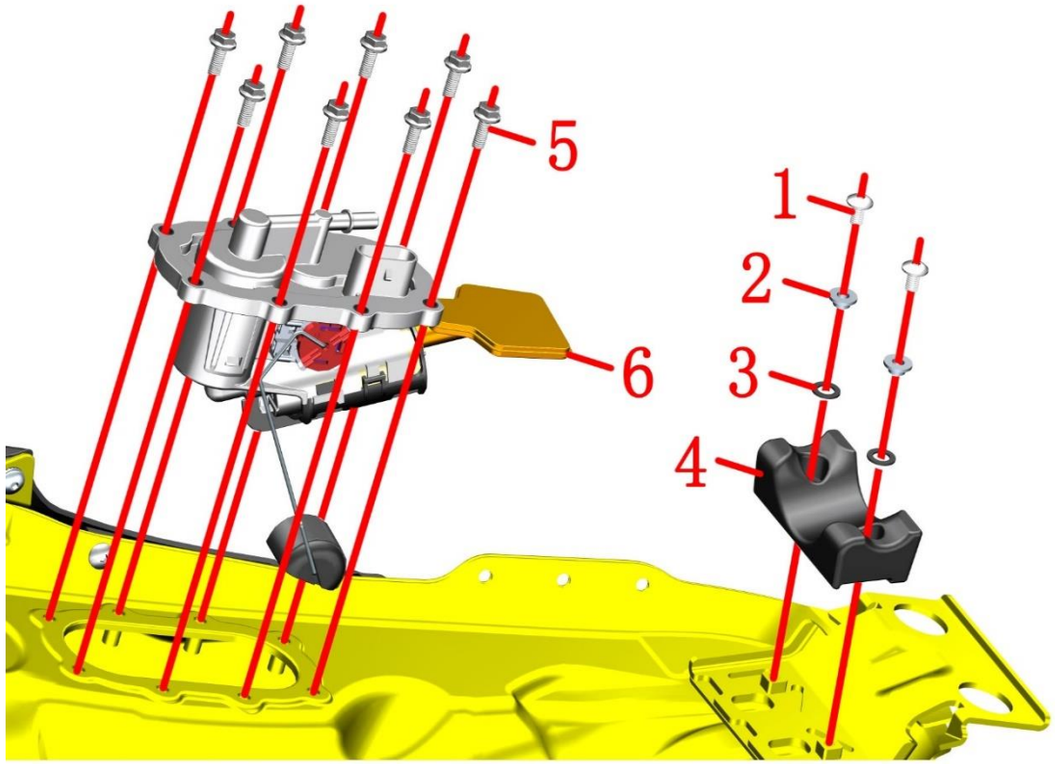

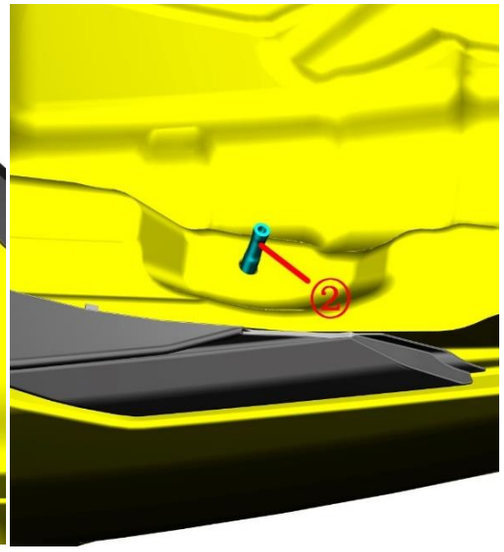

Fig. 4 FUEL TANK COVER COMPONET		Oil pump	CHK ADJ	
NO.	PART NO.	PART NAME	QTY	CAUTION
1	1251100-101000	Non-standard bolt M6×12 (304 stainless steel)	2	
2	1274100-155095	Flanged bushing φ6.2×φ8.4×3.5 + φ14×1.5(5 pcs (after sale)	2	
3	1241200-124021	hanging bushing buffer rubber (φ8.5×φ14×1)(5 pcs (after sale)	2	
4	1244200-083000	ZT310-V tank buffer	1	
5	1250105-137093	GB5789M6×16 (environmental color)	8	
6	1050958-012000	T02 built-in fuel pump (ZT350-V)	1	
7	1224100-033000	ZT250-S thread cap of the fuel tank	1	

PROCEDURE:

●Fuel tank cushion rubber

Using 4# inner hexagon socket remove the bolts (1) and remove the oil bushing (2) and the cushion rubber (3).Remove the tank cushion rubber (4).

●Fuel pump

Using 10#sleeve remove 8 bolts(5).

When the fuel pump (6) is removed, the float connecting rod cannot be bent to avoid inaccurate oil display.

After removing the fuel pump, it is recommended to temporarily seal the oil pump port to prevent something falling into the tank.

●Fuel tank cap

Flip to the front of the tank assembly, turn the tank cap (7) counterclockwise and remove.Be careful not to pull the nylon cord① during the removal process.

CAUTION:

●Before disassembling the fuel tank assembly, it is recommended to use the oil pump to pull out the fuel or use off the fuel

●Fireworks, telephone calls should not be allowed near the motorcycle -removal workshop to prevent accidents.

●When reversing the fuel tank inner assembly, remove the fuel pump and check that the fuel tank cap is tightened to prevent the remaining fuel from overflowing from the fuel tank port;the vent pipe 2 may have a small amount of fuel overflow when the fuel tank cap is turned back.

●When reassembling the fuel pump, be sure to clean the joint surface of the fuel pump sealant and the tank liner. When locking the bolt, the position should be locked to ensure uniform deformation of the seal gasket.

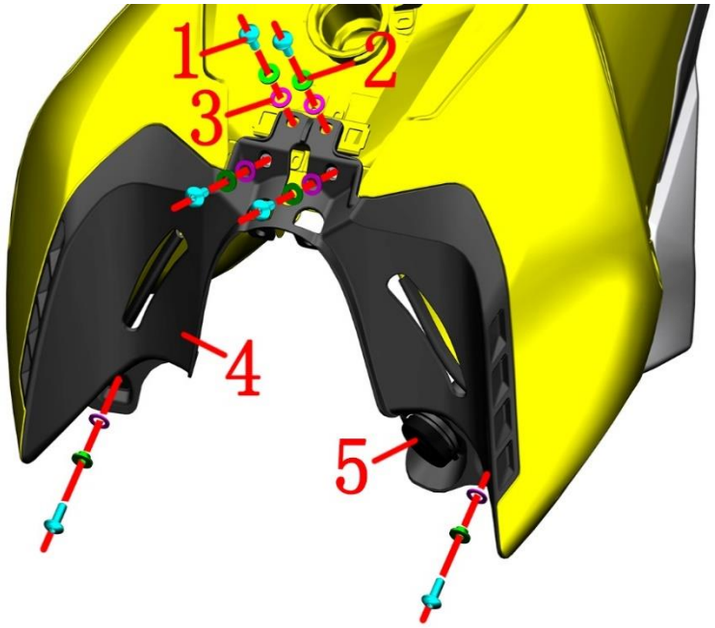

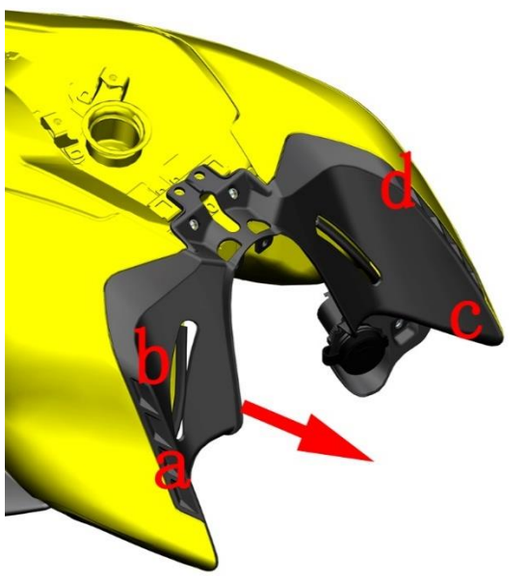

Fig. 5 FUEL TANK COVER COMPONET		Fuel tank front trim cover	CHK ADJ	
NO.	PART NO.	PART NAME	QTY	CAUTION
1	1251100-102000	Non-standard bolt M6×16 (304 stainless steel)	6	
2	1274100-155095	Flanged bushing φ6.2×φ8.4×3.5 + φ14×1.5(5 pcs/after sale)	6	
3	1241200-124021	hanging bushing buffer rubber (φ8.5×φ14×1)(5 pcs/after sale)	6	
4	4044201-262052	ZT310-V fuel tank cover (dark gray)	1	
5	1184200-100000	ZT310 dual USB charging cable	1	
6	1244200-109000	ZT310 dual port univsersal USB charging cable cover	1	After sale

PROCEDURE:

●Fuel tank middle decorative cover

Using 4# inner hexagon socket remove the bolts (1) separately; remove the bushing (2) and the cushion rubber (3).

As lower left corner pictures showed , one hand is placed against the fuel tank assembly, and pulled the middle part of the middle of the decorative cover (4) with another hand follow the direction of the arrow.

Pull out the bottom and then pull out the right middle b, the left lower c and the left middle d.Remove the dicoration cover assembly.

Flip to the back to remove the nut 1 from the usb charging cable, and remove the usb charging cable from the decoration cover.

The rubber cover (6) is an after-sales piece, and the charging cable has one piece.Used for replacement of the usb charging cable cover after aging.

CAUTION:

●The parts should be protected during the disassembly process to prevent damage to the paint surface.The decorative cover is long and should be handled or held by both hands during.

●Be careful not to pull the usb charging cable when removing the middle of the trim cover.

●Install the buckles in the order of a-b-c-d, and then install the bolts.

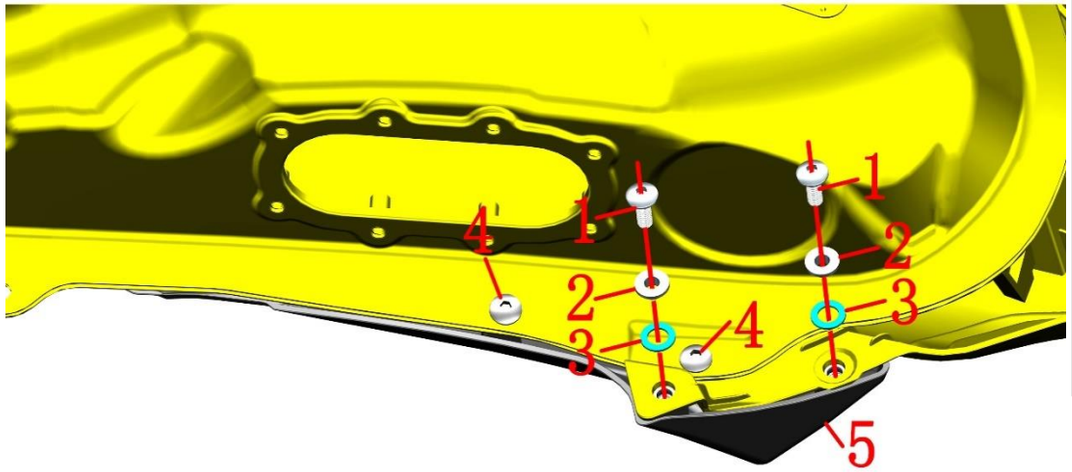

Fig. 6 FUEL TANK COVER COMPONET		Lower tank cover	CHK ADJ	
NO.	PART NO.	PART NAME	QTY	CAUTION
1	1251100-102000	Non-standard bolt M6×16 (304 stainless steel)	1	
2	1274100-155095	Flanged bushing φ6.2×φ8.4×3.5 + φ14×1.5(5 pcs/after sale)	10	
3	1241200-124021	hanging bushing buffer rubber (φ8.5×φ14×1)(5 pcs/after sale)	10	
4	1251100-101000	Non-standard bolt M6×12 (304 stainless steel)	4	
5	4044201-235051	ZT310-V fuel tank left decorative cover lower part (dark gray matte)	1	
6	1251300-063093	Plywood M6×11×15(color Zinc)	6	
7	4044201-236051	ZT310-V fuel tank right decorative cover lower part (dark gray matte)	1	

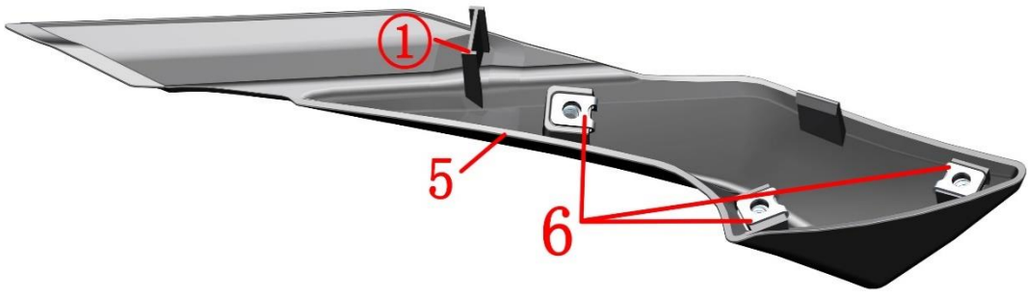

PROCEDURE:

●Left fuel tank decoration cover lower assembly .

Using 4# inner hexagon socket remove the two bolts (1) and remove the bushing (2) and cushion rubber (3)

Using 4# inner hexagon socket remove the two bolts (4).

Remove the lower part of the left decoration cover from the fuel tank assembly.

Remove the 3 piece splint nuts (6) from the lower part (5) of the left decoration cover.

●Right tank trim cover lower assembly

Refer to the above steps to remove the right decoration cover lower part (7) and the cleat nut (6).

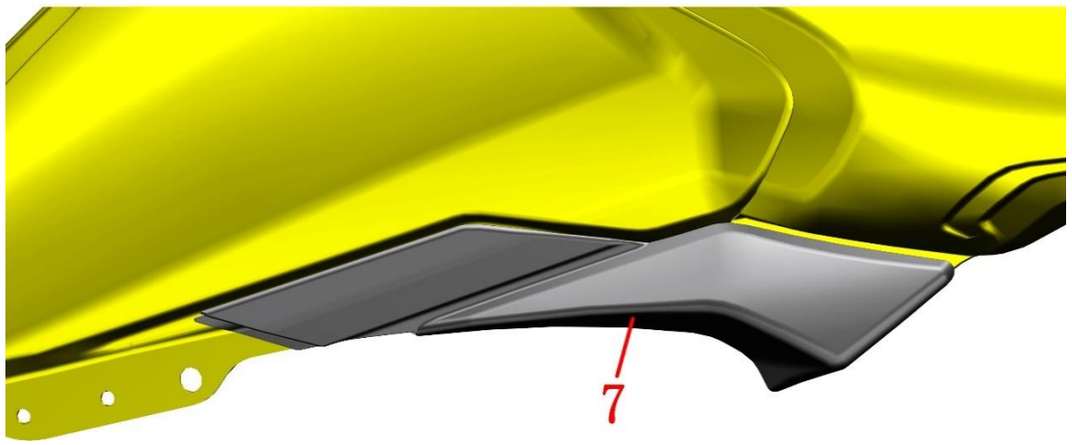

CAUTION:

●The parts should be protected during the disassembly process to prevent damage to the paint surface.

●Before replacing the lower part of the new decorative cover, check whether the process clip 1 has been cut short. If it is not, cut it first and then assemble it.

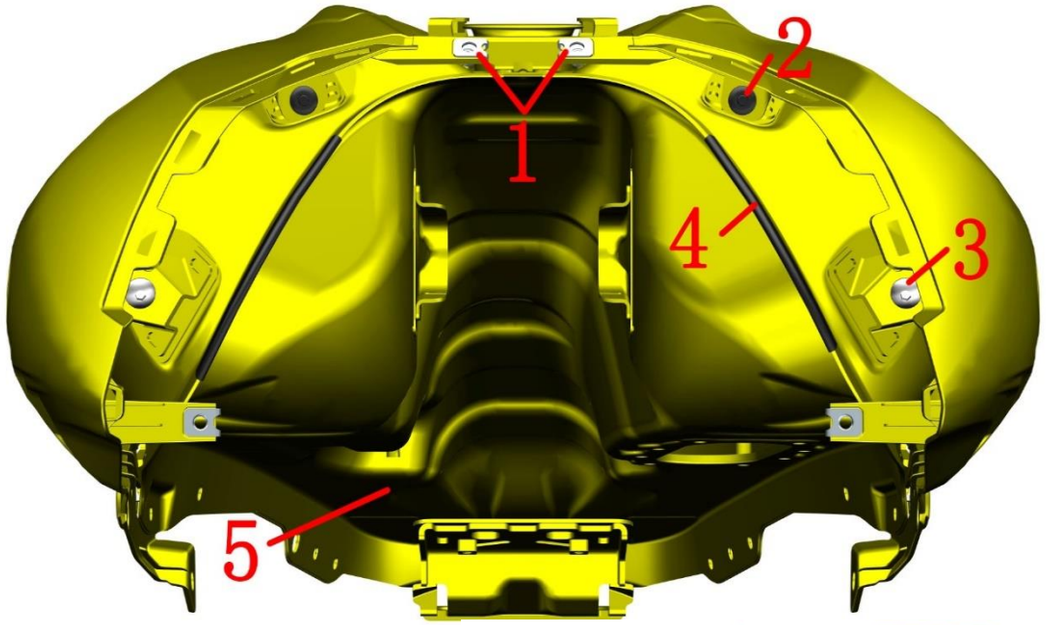

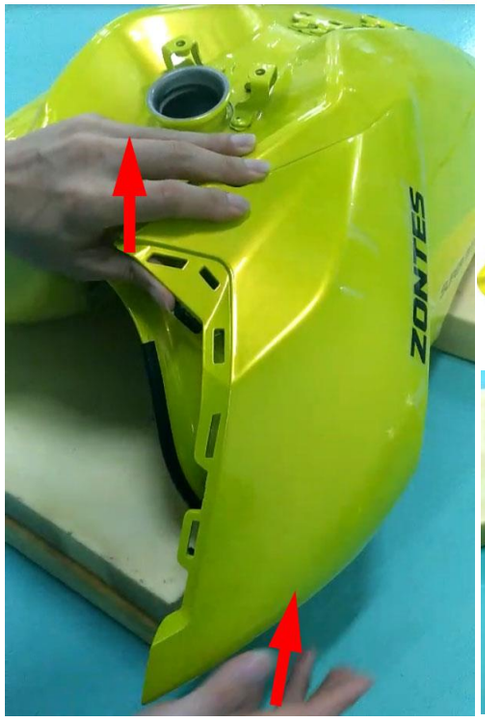

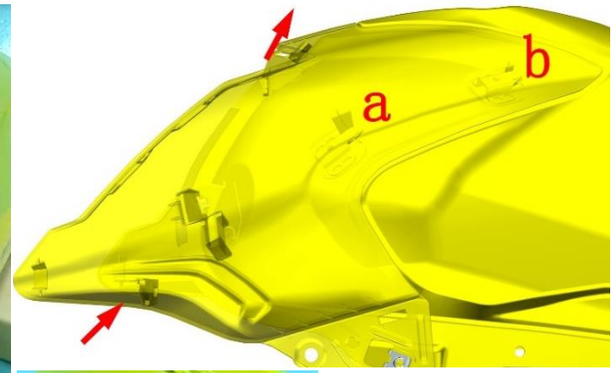

Fig. 7 FUEL TANK COVER COMPONET		Fuel tank trim cover assembly 1	CHK ADJ	
NO.	PART NO.	PART NAME	QTY	CAUTION
1	1251300-063093	Plywood M6×11×15(color Zinc)	4	
2	1224100-089000	ZT250-S Expansion nail(5 pcs/after-sale)	2	
3	1251100-101000	Non-standard bolt M6×12 (304 stainless steel)	2	
4	1240300-397021	HJ125-6 pod glass strip (1.5m)(after-sale)	0.17	
5		ZT310-V fuel tank	1	

PROCEDURE:

●Fuel tank decoration cover assembly

Remove the 4 plywood nuts (1)

Remove the two expansion pins (2)

Using 4# inner hexagon socket remove the two bolts (3).

As shown in the lower left corner, first push the upper part of the decorative cover upwards with the left thumb, and tap the right hand diagonally upwards to remove the left decorative cover assembly from the fuel tank.

Remove the right decoration cover assembly in the same way.

Remove the strips on the left and right sides (4).

CAUTION:

●The parts should be protected during the disassembly process to prevent damage to the paint surface.

●Pay attention to the direction of force, and then remove the trim cover from the tank liner and then remove it.

●When installing, first fasten the buckles at both a and b, and then tap it diagonally downward.

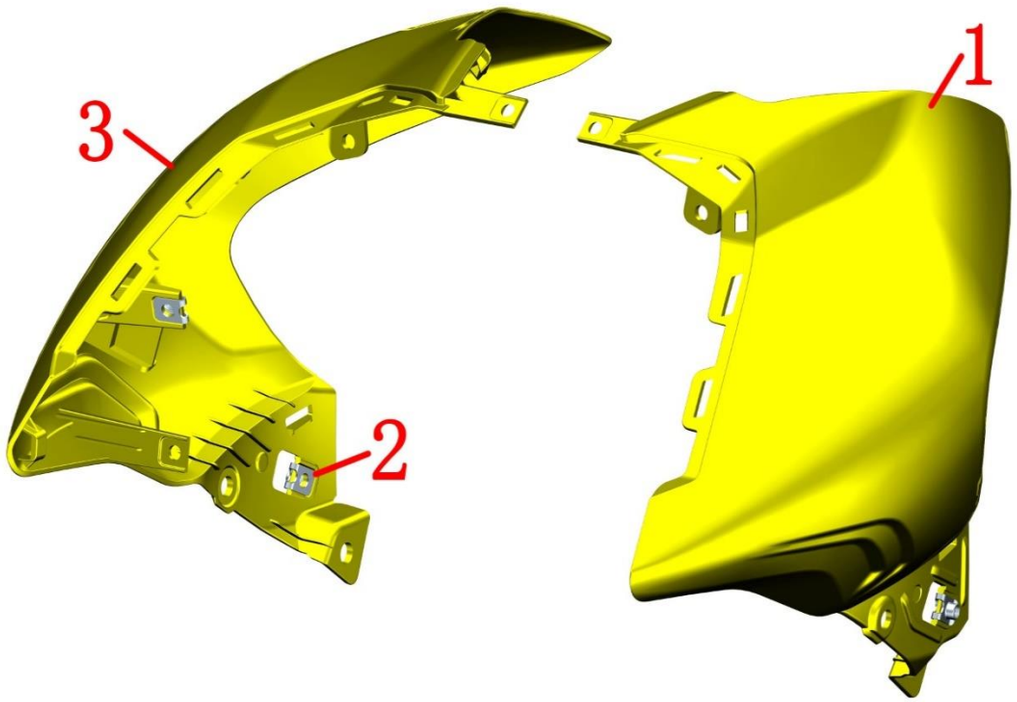

Fig. 8 FUEL TANK COVER COMPONET		Fuel tank trim cover assembly 2	CHK ADJ	
NO.	PART NO.	PART NAME	QTY	CAUTION
1		ZT310-V fuel tank left decorative cover	1	
2	1251300-063093	Plywood M6×11×15(color Zinc)	4	
3		ZT310-V fuel tank right decorative cover	1	

PROCEDURE:

●Fuel tank decoration cover assembly

Remove the cleat nut (2) from the left decroation cover (1) or the right decoration cover (3), respectively.

CAUTION:

●The parts should be protected during the disassembly process to prevent damage to the paint surface.

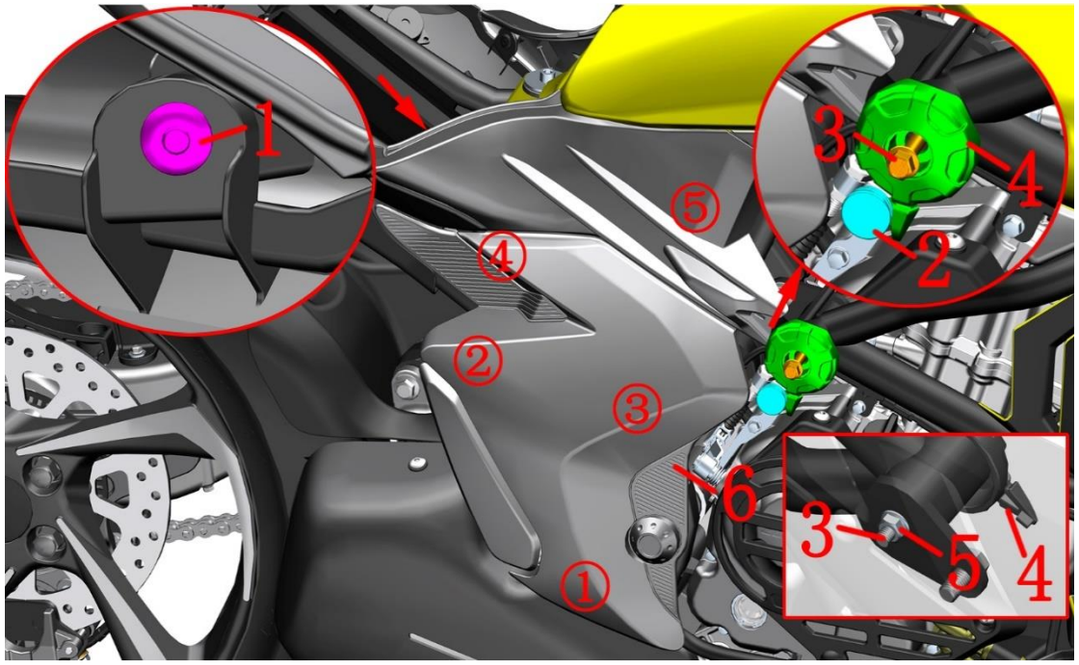

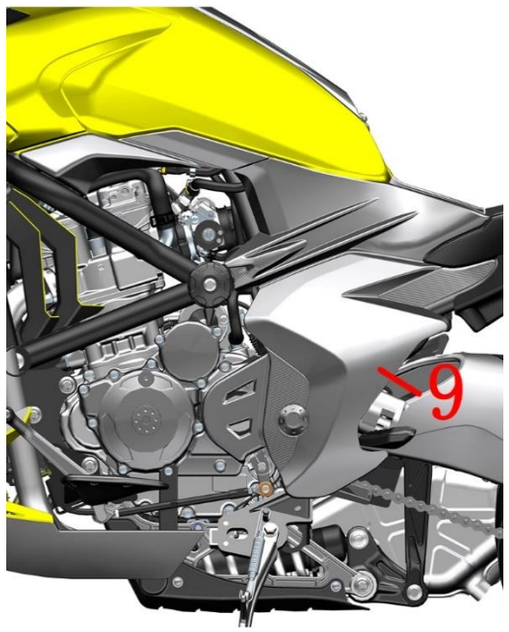

Fig.1 SIDE COVER COMPONENT		SIDE COVER COMPONENT	CHK ADJ	
NO.	PART NO.	PART NAME	QTY	CAUTION
1	1224100-089000	ZT250-S Expansion nail(5 pcs/after-sale)	2	
2	1244100-061000	ZT250 anti-water rubber of frame	2	
3	1250105-018091	GB5789 M8×70(white zinc)	2	
4	4044201-256051	ZT310-V fender ball (dark grey matte)	2	
5	1250303-011093	GB6177.1M8(color zinc)	2	
6		ZT350-V right side cover	1	
7	1251200-038093	Non-standard self-Tapping screwST3.9×12(zine)	2	
8	1184300-124000	ZT350 Inductive antenna without electricity(after-sale	1	
9		ZT350-V left side cover	1	

PROCEDURE:

●Side cover

Remove the seat cushion first, and then remove the expansion nails (1) at the connection between the right side cover (6) and the rear cover. Remove the waterproof rubber plug (2), after holding the nut (5) with 13# plug wrench then using a 12# sleeve to loosen the bolt (3) by 5 threads, without completely removing it. Pull out the decorative ball (4) and rotate it clockwise to stagger the groove on the right side cover. Pull out the right side cover in the order of ①-②-③-④-⑤. Turn the right side cover component over to the back, find the plug of the induction antenna, pull it off and remove the right side cover component. Remove 2 pcs screws(7) then take off the antenna(8).

Remove the left side cover (9) using the same steps as above.

CAUTION:

●When inserting， install the staples by⑤-④-③-②-①; finally install the expansion screw.

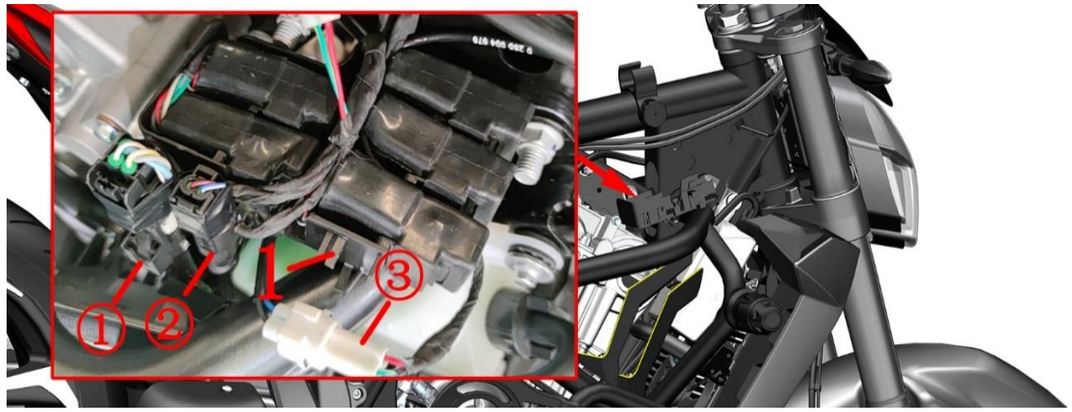

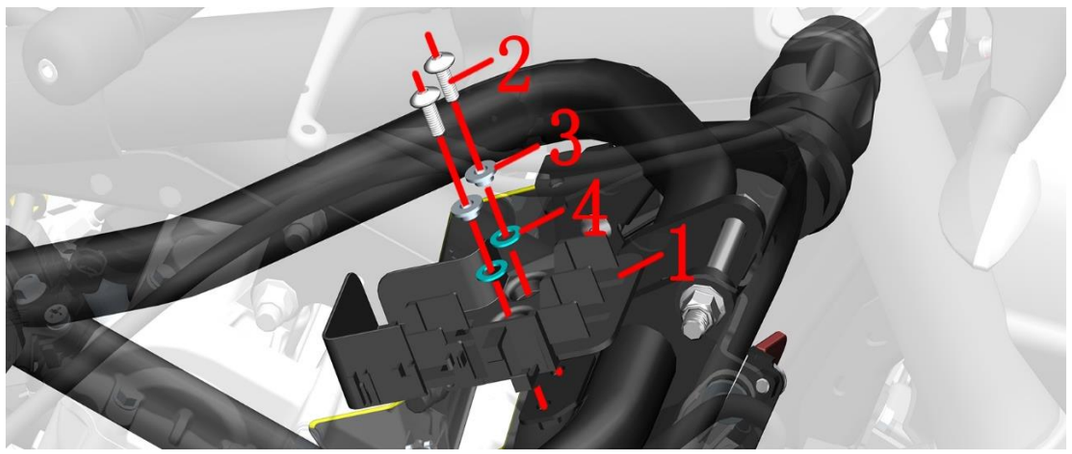

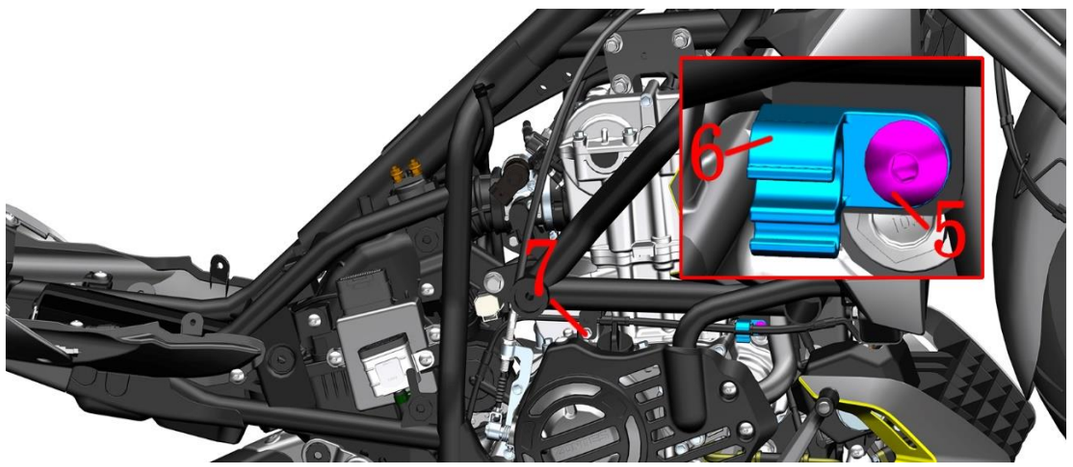

Fig.1 GUARD BAR COMPONENT		Guard bar assembly 1	CHK ADJ	
NO.	PART NO.	PART NAME	QTY	CAUTION
1	1224300-088000	ZT350-V1 EFI relay holder	1	
2	1251100-102000	Non-standard bolt M6×16 (304 stainless steel)	2	
3	1274100-155095	Flanged bushing ϕ6.2×ϕ8.4×3.5 + ϕ14×1.5(5 pcs/after	2	
4	1241200-124021	flanging bushing buffer rubber (ϕ8.5×ϕ14×1)(5 pcs/af	2	
5	1251100-101000	Non-standard bolt M6×12 (304 stainless steel)	1	
6	1224200-003000	ZT310-R Rear disc brake pipe clamp	1	
7	1251100-061093	M6×22 Hex flang bolt thread level 8.8 (color zinc)	1	

PROCEDURE:

●Bumper decorative ball

Remove the left and right side covers, bumper trim balls and fuel tank assembly by referring to the previous steps for removing the side cover and fuel tank assembly.

Remove the 5 pieces of relay and rubber cover from the holder. Remove the oxygen sensor plug ①, wheel speed sensor plug ② and cooling fan plug ③.

Use a 4# hexagon socket to remove the bolt(2), remove the bushing(3) and the buffer rubber(4), and remove the fixing seat(1).

Remove the bolt (7) with an 8# sleeve, pull out the RC-HU oil pipe from the wire clamp(6), and then use a 4# hexagon socket to remove the bolt(5).

CAUTION:

●The seat cushion, side cover, fuel tank asembly, etc. must be removed in advance.

●When removing the high-pressure oil pipe, be sure to wait until the engine and muffler are completely cooled before operating to prevent accidental ignition of the fuel and cause fire.

●Fireworks, answering or dialing should be strictly prohibited near the car-breaking site to prevent accidents.

●A small amount of fuel leakage is required when the high-pressure oil pipe sub-assembly is pulled out, and the fuel should be prevented from dripping to the outside of the engine or the muffler.

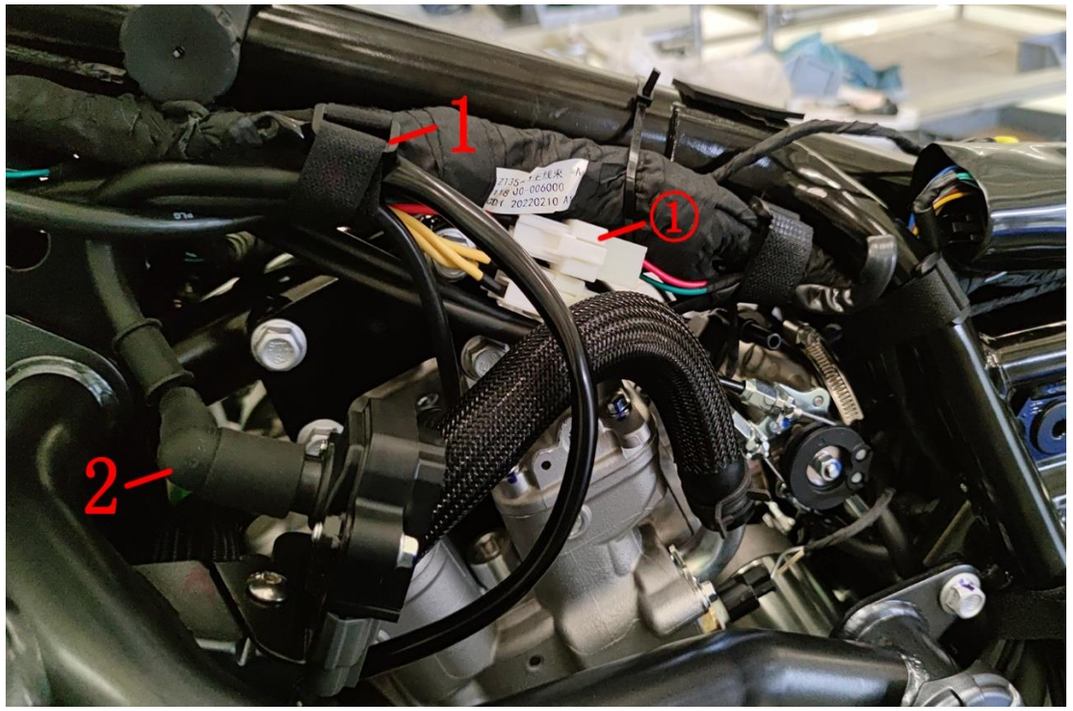

Fig.2 GUARD BAR COMPONENT		Guard bar assembly 2	CHK ADJ	
NO.	PART NO.	PART NAME	QTY	CAUTION
1	1224300-110000	Reverse buckle Velcro strap (20×200mm)	1	
2	1050958-007000	ZT350 EFI high voltage line	1	
3	1251300-057093	Non-standard nut M10×1.5(Dacromet)	1	
4	1251100-132003	Non-standard bolt M10×1.5×80 (Dacromet)	1	
5	1250305-055091	GB6187.1 M12×1.25(White Zinc)(5 pcs/after-sale)	1	
6	1251112-018000	GB5187 non-standard bolt M12×1.25×105(10.9 garde/dacromet)	1	
7	1251100-082093	Non-standard bolts M10×1.5×20(Dacromet)	2	

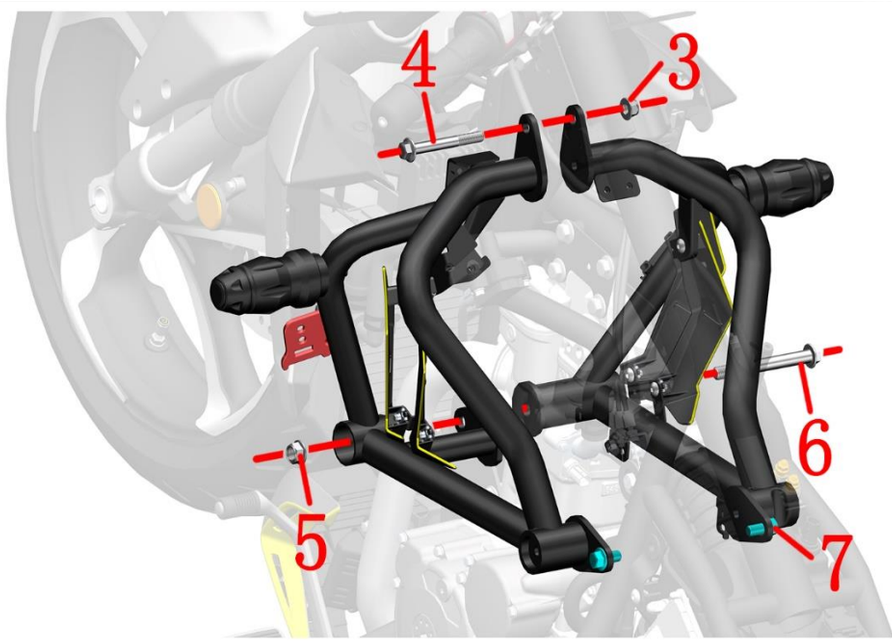

PROCEDURE:

●Bumper assembly

Remove the cable tie(1) and unplug the two plugs of the rectifier(1). Pull out the rubber cap of the high-voltage wire(2).

Use a 14# sleeve to fix the head of the bolt (4) on the left side and remove the nut(3) with a 14# sleeve, and remove the auxiliary water tank bracket.

Use a 14# sleeve to fix the head of the bolt (6) on the right side and remove the nut (5) with a 17# sleeve.

After grasping the left and right guard rail assemblies, use a 14# sleeve to remove 2 bolts (7), and then remove the left and right guard guard assemblies after removing the bolts (4).

CAUTION:

●Be careful not to press any cables when reassembling

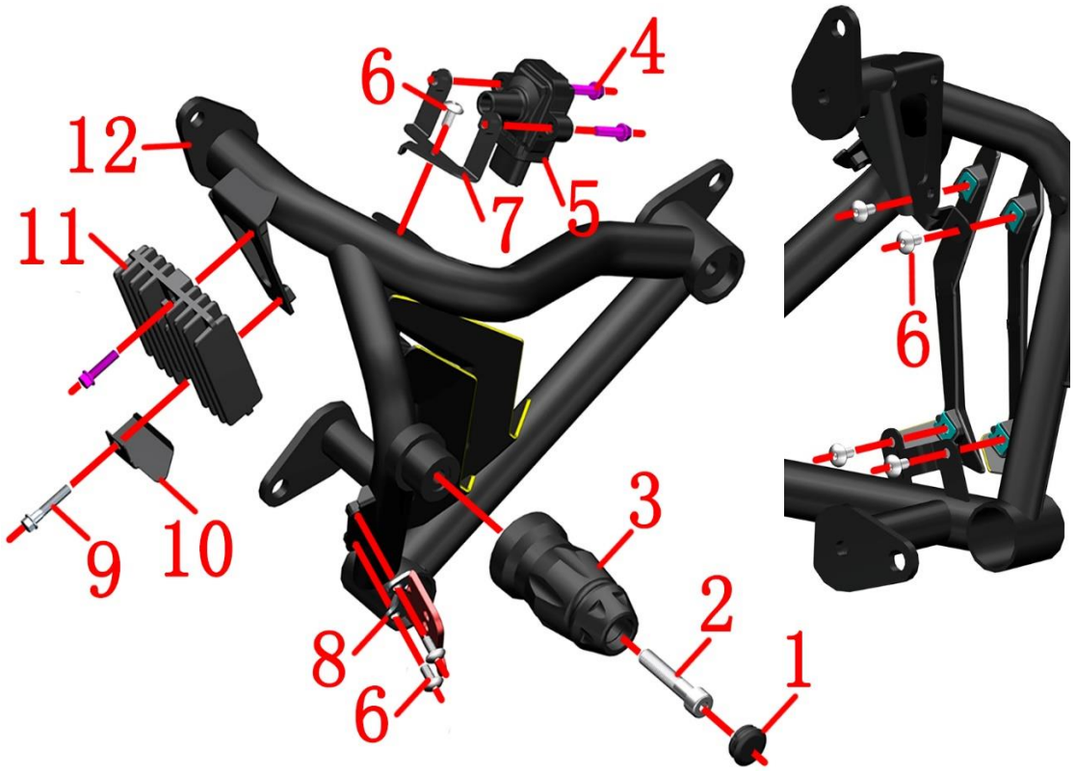

Fig.3 GUARD BAR COMPONENT		Guard bar assembly 3	CHK ADJ	
NO.	PART NO.	PART NAME	QTY	CAUTION
1	1244300-027000	ZT350-R guard bar waterproof rubber stopper	2	
2	1251100-083094	Non-standard bolt M10×1.5×50 (Dacromet)	2	
3	1244300-026000	ZT350-R guard bar anti-drop glue	2	
4	1251100-061093	M6×22 Hex flang bolt thread level 8.8 (color zinc)	3	
5	1050958-006000	ZT350 ignition coil body	1	
6	1251100-101000	Non-standard bolt M6×12 (304 stainless steel)	11	
7	1274300-064000	ZT350-V1 ignition coil bracket	1	
8	1274200-037000	ZT310-R support of disc brake lock	1	
9	1251112-002093	M6×30 Hexagon flange bolts (color zinc)	1	
10	1274300-067000	ZT350-V water outlet pipe anti-wear bracket	1	
11	1186200-013000	ZT310 Rectifier (350W)	1	
12	4114200-001051	ZT310-V left bumper (dark gray matte)	1	
13	4114200-004051	ZT310-V1 right crash bar (dark gray matte)	1	

PROCEDURE:

●Left bumper assembly

Remove the water stopper (1), using 6# inner hexagon socket remove the bolt (2), and remove the anti-drop glue(3).

Remove 2 bolts(4),then take off the ignition body(5).Remove the bolt (6) with 4# hexagon socket and the bracket (7).

Remove 2 pcs bolts(6)， remove the disc brake lock bracket (8).

Hold the rectifier (11) and remove the bolt (9) with 8# sleeve then take off the bracket(10)， remove the bolt(4) then remove the rectifier(11).

Remove the 4 bolts(6) and remove the engine decorative cover assembly.

●Right bumper assembly

Follow the steps above to remove the right bumper.

CAUTION:

●Protect the engine decorative cover paint to prevent scratches.

●The disc brake lock bracket is only suitable for TOP DOG disc brake lock RE008 and TOP DOG disc brake lock RE0081 two models, other models are not adapted.

●When reassembling, pay attention to the radiator outlet pipe below the outlet pipe bracket.

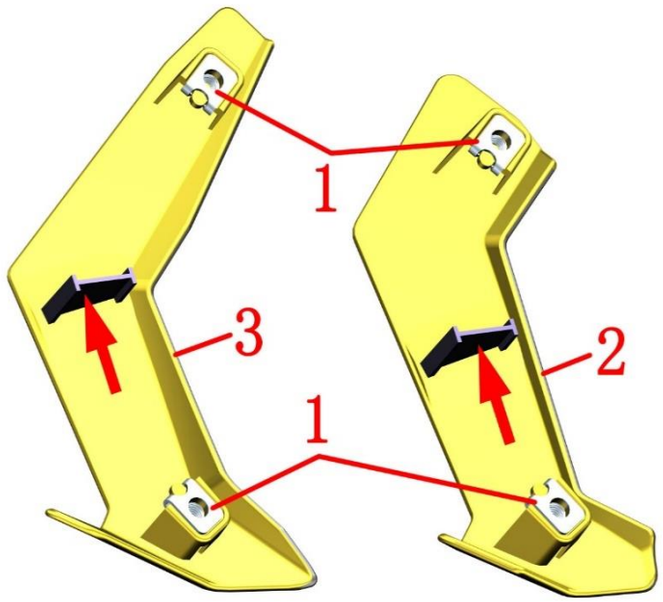

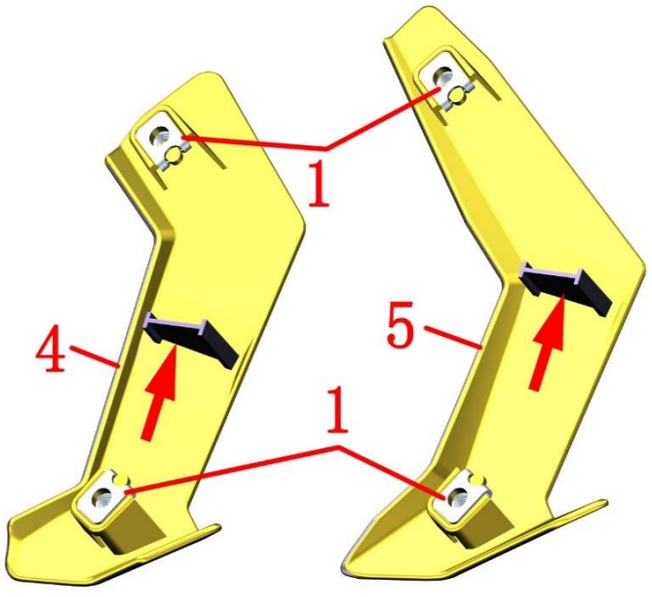

Fig.4 GUARD BAR COMPONENT		Engine decorative cover components	CHK ADJ	
NO.	PART NO.	PART NAME	QTY	CAUTION
1	1251300-063093	Plywood M6×11×15(color zinc)	8	
2		Engine decorative cover left front	1	
3		Engine decorative cover left back	1	
4		Engine decorative cover right front	1	
5		Engine decorative cover right back	1	

PROCEDURE:

●Left engine decorative cover assembly

1.Remove the two nuts (1) from the left front decorative cover (2) of the engine.

2.The same method remove the nuts (1) from the left back decorative (3), the right front decorative cover (4), and the right back decorative cover (5).

CAUTION:

●Protect the engine decorative cover paint to prevent scratches.

●Before replacing the engine decorative cover, check whether the clip indicated by the arrow has been cut short,if not, cut it first and then assemble it on the bumper.

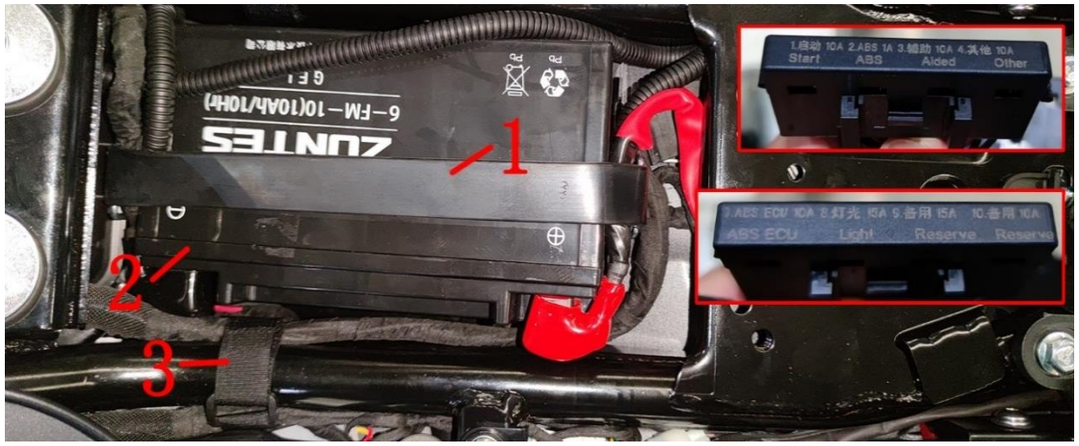

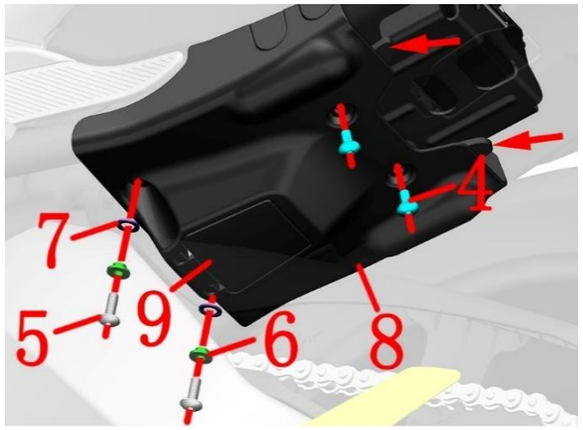

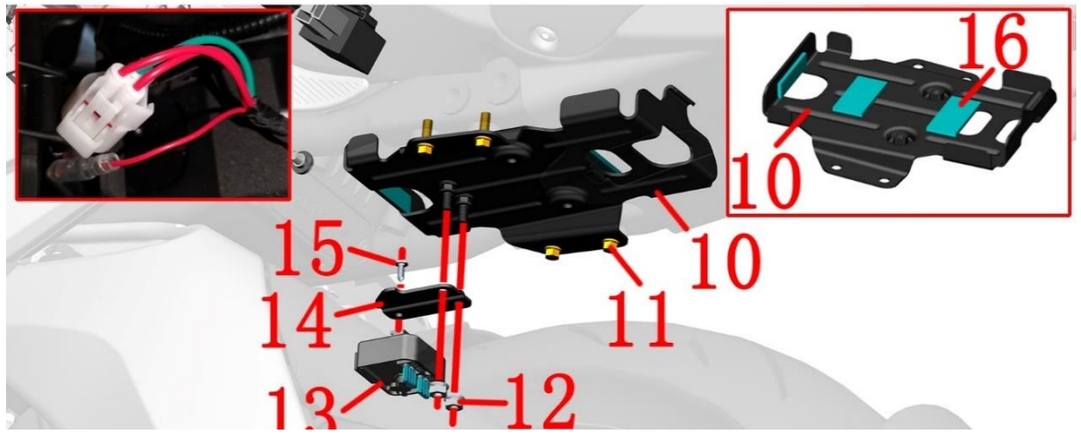

Fig.1 REAR COVER COMPONENT		Battery component	CHK ADJ	
NO.	PART NO.	PART NAME	QTY	CAUTION
1	1244200-111000	ZT310 gel battery strap	1	
2	1184200-099000	ZT310 colloid battery (6-FM-10/10Ah)	1	
3	1224300-110000	Reverse buckle Velcro strap (20×200mm)	1	
4	1251100-101000	Non-standard bolt M6×12 (304 stainless steel)	2	
5	1251100-102000	Non-standard bolt M6×16 (304 stainless steel)	2	
6	1274100-155095	Flanged bushing φ6.2×φ8.4×3.5 + φ14×1.5(5 pcs/after-sale)	2	
7	1241200-124021	flanging bushing buffer rubber (φ8.5×φ14×1)(5 pcs/after-sale)	2	
8	4044201-467051	ZT310-VX bottom cover， battery， gray color	1	
9	1224200-040000	ZT310 Electric parts box lower cover	1	
10	1274300-084000	ZT350-VX battery holder	1	
11	1251112-001093	M6×16 Hexagon flange bolts (color zinc)	4	
12	1250303-040093	GB6177.1M6 (environmental color)(5 pcs/after-sale)	2	
13	1184300-003000	ZT350 charging port holder	1	
14	1274300-041000	ZT350-VX charging port bracket	1	
15	1251200-038093	Non-standard self-Tapping screwST3.9×12(zine)	1	
16	1241200-125000	HJ125-6 Battery rubber gasket(5 pcs/after-sale)	3	

PROCEDURE:

●Battery bracket

Pull the battery strap (1) pull down to loosen the metal buckle, remove the battery strap (1), unplug the black negative protective cap of the main wiring harness, and remove the bolts that come with the battery with a cross. Remove the battery negative wire first, and then remove the positive wire, then the battery(2) can be removed.

Using 4# inner hexagon socket remove the 2 bolts(5), remove the 2 flanging bushings (6) and the flanging bushing cushion rubbers (7),remove 2pcs bolts(4) then the battery bottom cover can be removed.Take off the lower cover(9) from the cover(8).

Unplug the two plugs of the charging port, remove the nut (12) with a 10# sleeve, and remove the charging port assembly. Use a Phillips screwdriver to remove the bolt (15), and separate the charging port bracket (14) and the charging port base (13).

Use an 8# sleeve to remove four bolts (8), and then the battery bracket (10) can be removed. The battery pad (16) is pasted on the battery holder (10). If you need to remove it, you can use a hot air gun to heat it back and forth until the double-sided adhesive is softened and then tear it off.

CAUTION:

●Reassemble the battery or fuse, etc. Remember to remember to reset the EFI hardware: Turn on the key-Ignition- 10 seconds After the ignition is turned off - After 10 seconds Turn on the ignition switch and repeat 2 times.

●Open the rubber plug and insert the original standard charger DC plug. Then plug the AC socket into the 110-220V power supply. If the battery is damaged due to the use of inferior chargers, it is not within the scope of the Three Guarantees.

Fig.2 REAR COVER COMPONENT		Backrest assembly component	CHK ADJ	
NO.	PART NO.	PART NAME	QTY	CAUTION
1	1250205-040095	GB70.1 inner hex bolt M8×16（color Zinc）	4	
2	1251100-101000	Non-standard bolt M6×12 (304 stainless steel)	1	
3	1244200-062100	ZT310-V backrest rubber (improved)	1	
4	1244200-005000	ZT310-R buffer rubber of head cover	1	
5	1274200-146000	ZT310-V backrest rubber mounting bracket	1	
6	4024200-074051	ZT310-V rear back (dark grey matte)	1	
7	4044201-257051	ZT310-V rear tail skirt small cover (dark gray matte)	2	without backrest
8	4044201-258051	ZT310－V rear decoration cover rear cover	2	
9	1244200-090000	ZT310-V rear end skirt front small cover double-sided adhesive tape	4	

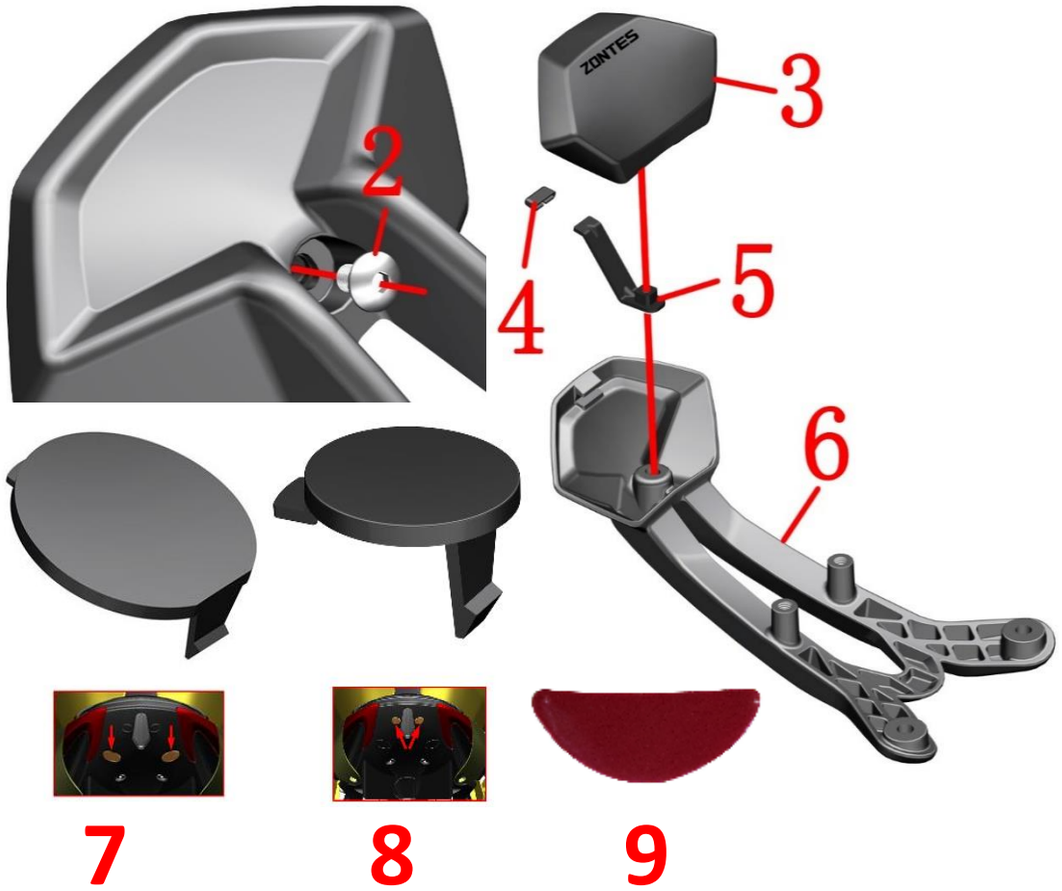

PROCEDURE:

●Backrest assembly componen

Using 6# inner hexagon socket remove the bottom two bolts (1).

Hold the backrest assembly and remove the two upper bolts (1) with 6# inner hexagon. Remove the backrest assembly from the vehicle.

Flip to the back and remove the bolts (2) with the 4# inner hexagon socket.

Divided the backrest (6) and backrest rubber (3).

Remove the holder (5) from the backrest.Remove buffer (4) from the holder.

●Without backrest

If without the backrest will send four units small cover and double tape to block up the hole of the rear backrest.

CAUTION:

●Remove the side cover, seat cushion, and cover decoration cover in advance.

●The material should be protected during discomponent to prevent damage to the paint.

Fig.3 REAR COVER COMPONENT		Tail skirt taillight component 1	CHK ADJ	
NO.	PART NO.	PART NAME	QTY	CAUTION
1	1186800-177000	ZT703-F PKE Buzzer (4KHZ)(after-sale)	1	
2	1184200-053000	ZT310PKE external single antenna	1	

PROCEDURE:

●Buzzer

Find the connector of the buzzer (1) close to the side cover on the front left side of the rear cover, and press the card of the white plug to remove the plug.Note that the drain hole indicated by the arrow should be down or at a low positioon to avoid buzzer silencing dute to water accumulation.

●PKE antenna

Find the plug of PKE antenna at the front of right rear cover, pull it out and arrange the cable.

The PKE antenna (2) is pasted with the double topping and the double topping on the rear cover.Heat it slightly with a hot air gun, then tear off the double topping and clean up the residue.

The end of the antenna connected to the main beam can be removed from the gap between the frame and the rear decoration cover.

●The tail light plug

① it is not necessary to pull out the cushion lock plug if the cushion lock is not removed.

② is the tail light plug, need to be pulled out first, convenient back to remove the tail skirt components.

③ OBD diagnostic interface

CAUTION:

●Do not pull the cable directly when unplugging the plug.

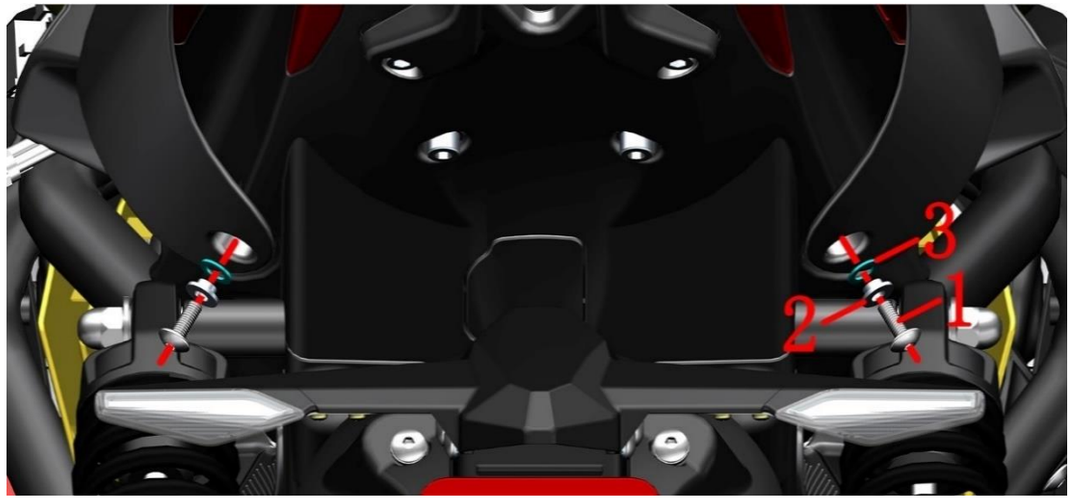

Fig.4 REAR COVER COMPONENT		Tail skirt taillight component 2	CHK ADJ	
NO.	PART NO.	PART NAME	QTY	CAUTION
1	1251100-102000	Non-standard bolt M6×16 (304 stainless steel)	6	
2	1274100-155095	Flanged bushing ϕ6.2×ϕ8.4×3.5 + ϕ14×1.5(5 pcs/after	4	
3	1241200-124021	flanging bushing buffer rubber (ϕ8.5×ϕ14×1)(5 pcs/af	6	
4	1274200-138000	ZT310-V rear skirt decorative cover bracket	1	
5		ZT310－V Rear cover left trim cover	1	
6		ZT310－V Rear cover right trim cover	1	
7	1250502-010093	GB96.1 ϕ6(environmental color)	2	
8	1274100-018000	ZT250-S Anti-hot plate sleeve, muffler	2	
9	1250104-006097	GB16674M6×12 (chromed/HH)	2	
10	1251100-375000	Hexagon socket head screw M6×16+8.5×5 SUS302	2	

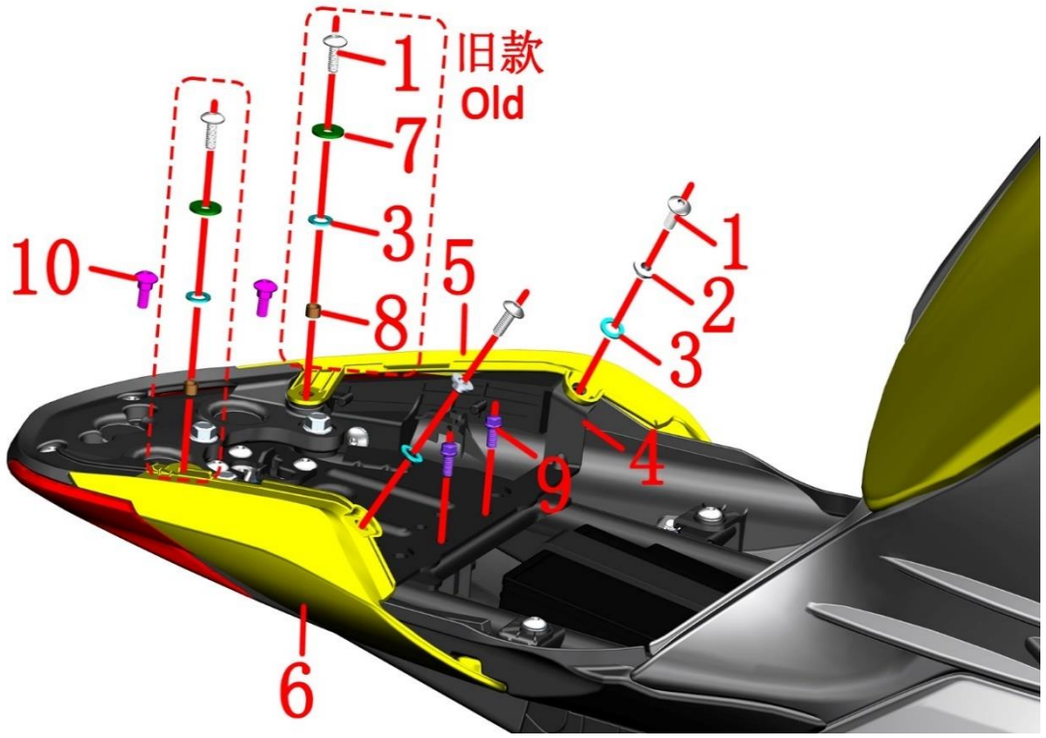

PROCEDURE:

●Rear cover trim cover

Using 4# inner hexagon socket remove the bolt (1) on the bottom left side and remove the bushing (2) and cushion rubber (3).

Using 4# inner hexagon socket remove the bolt (1) on the bottom right side and remove the bushing (2) and cushion rubber (3).

Using 4# inner hexagon socket remove the bolt (1) on the trim cover holder and remove the bushing (2) and cushion rubber (3).

The old model:

Using 4# inner hexagon socket remove the bolt (1) on the rear trim cover and remove the gasket (7) bushing (3) and cushion rubber (8).

The new model:

Using 4# inner hexagon socket remove the bolt (10) on the rear trim cover.

Pull the left trim cover (5) and the right tail trim cover (6) together and remove.

Using 8# sleeve remove the trim cover bracket (4).

CAUTION:

●The material should be protected during discomponent to prevent scratching the lamp.

●The old model uses M6×16 bolt + GB96.1 ϕ 6 + flanging bushing buffer glue + muffler anti-ironing board bushing 2 pieces of structure. Buy 2 pieces " 1251100-375000 Hexagon socket head screw M6×16+ 8.5×5 SUS302 " instead to reduce assembly steps.

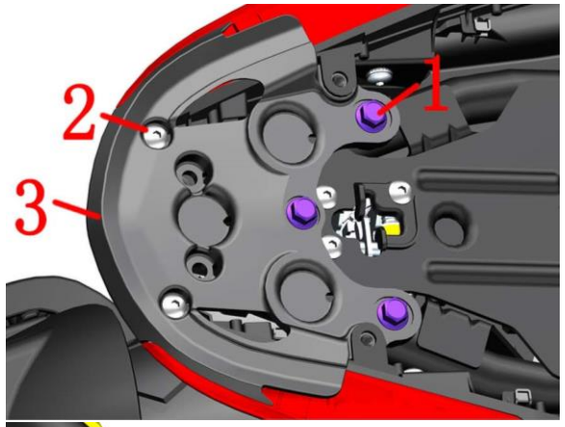

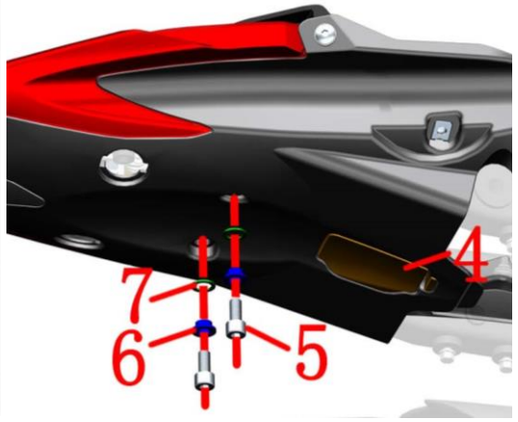

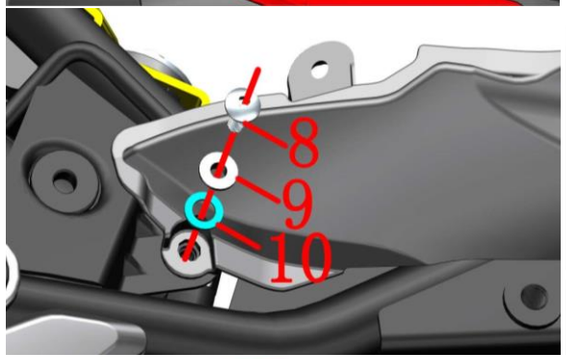

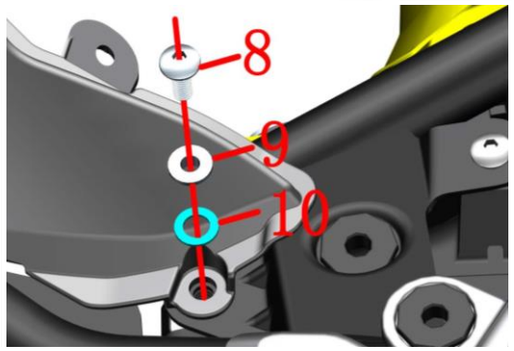

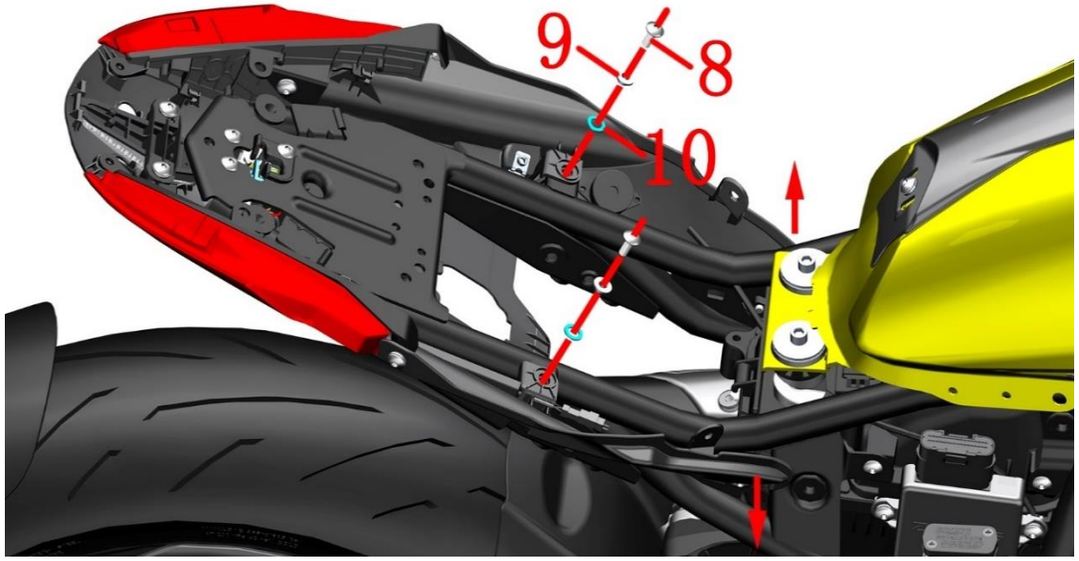

Fig.5 REAR COVER COMPONENT		Tail skirt taillight component 3	CHK ADJ	
NO.	PART NO.	PART NAME	QTY	CAUTION
1	1250105-142093	GB5789M8×20(color zinc)	3	
2	1251100-101000	Non-standard bolt M6×12 (304 stainless steel)	2	
3	4024200-073051	ZT310-V Rear end aluminum alloy bracket (dark gray r	1	
4	4044201-255051	ZT310-V PKE small cap (dark grey matte)	1	
5	1250205-040095	GB70.1 inner hex bolt M8×16(color Zinc)	2	
6	1251700-058093	Flanging bushing ϕ8.2×ϕ11×4.5 + ϕ16×1.5(environme	2	
7	1240300-071000	Flanging bushing rubber (ϕ11×ϕ16×1)	2	
8	1251100-102000	Non-standard bolt M6×16 (304 stainless steel)	6	
9	1274100-155095	Flanged bushing ϕ6.2×ϕ8.4×3.5 + ϕ14×1.5(5 pcs/after	4	
10	1241200-124021	flanging bushing buffer rubber (ϕ8.5×ϕ14×1)(5 pcs/af	6	

PROCEDURE:

●Rear aluminum alloy bracket

Use a 12# sleeve to remove 3 bolts (1) and use a 4# inner hexagon to remove 2 bolts (2); open the left and right taillights slightly outwards and pull them diagonally to the rear to remove the bracket (3).

●Rear cover trim cover

Remove PKE small cover (4) after pressing down.

Use 6# inner hexagon to remove the two bolts (5) at the bottom, and remove the bushing (6) and cushion rubber (7).

Using 4# inner hexagon socket remove the bolt (8) on the front right trim cover , remove the bushing (9) and cushion rubber (10).

Using 4# inner hexagon socket remove the bolt (8) on the front left trim cover , remove the bushing (9) and cushion rubber (10).

Using 4# inner hexagon socket remove the bolt (8) on the front middel trim cover , remove the bushing (9) and cushion rubber (10).

Pull out the nail in front of the tail light assembly and the trim cover then remove it.

CAUTION:

●The material should be protected during discomponent to prevent scratching the lamp.

●Never pull the cable directly.

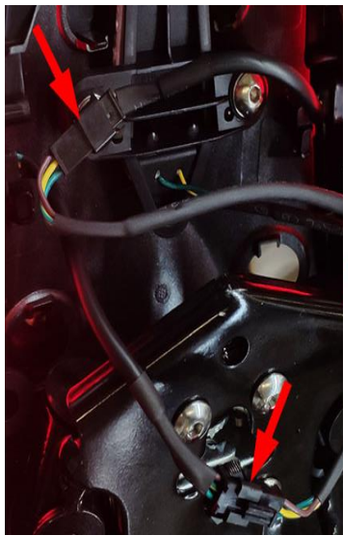

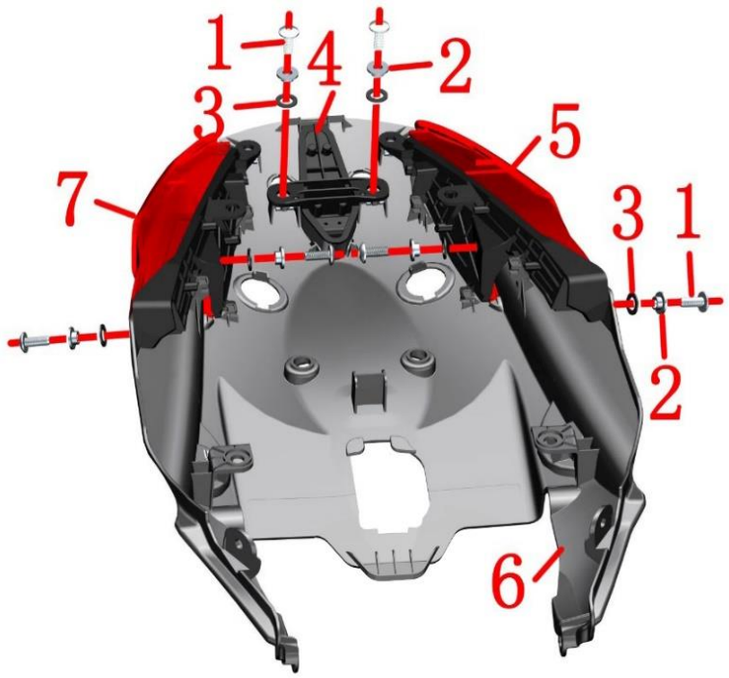

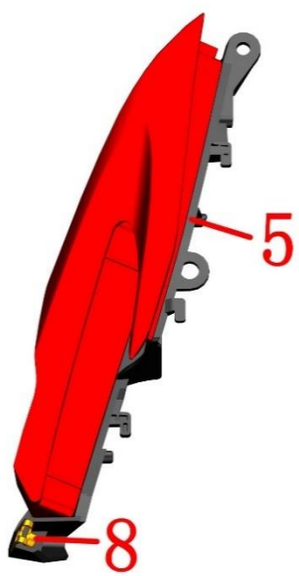

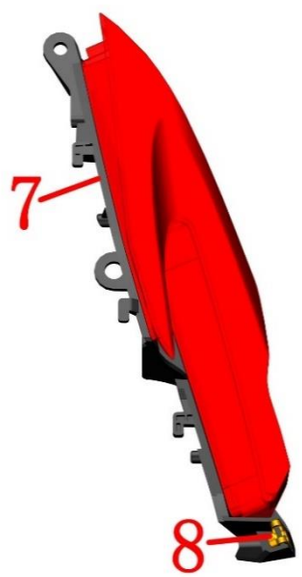

Fig.6 REAR COVER COMPONENT		Tail skirt taillight component 4	CHK ADJ	
NO.	PART NO.	PART NAME	QTY	CAUTION
1	1251100-102000	Non-standard bolt M6×16 (304 stainless steel)	6	
2	1274100-155095	Flanged bushing ϕ6.2×ϕ8.4×3.5 + ϕ14×1.5(5 pcs/after	6	
3	1241200-124021	flanging bushing buffer rubber (ϕ8.5×ϕ14×1)(5 pcs/af	6	
4	1174200-029000	ZT310-V brake lights	1	
5	1174200-027000	ZT310-V left rear rear light	1	
6	4044201-252051	ZT310-V rear skirt (dark grey matte)	1	
7	1174200-028000	ZT310-V right rear rear light	1	
8	1251300-063093	Plywood M6×11×15(color zinc)	10	

PROCEDURE:

● Rear light

First pull out the plug of the left rear tail lamp (5) and the right rear tail lamp (7).

Remove two bolts (1) of the brake lamp (4), take off the bushing (2) and cushion rubber (3);Pull up the outlet side of brake lamp and remove it.

Remove the bolt (1) on both sides of the left rear lamp (5), remove bushing (2) and cushion rubber (3) ;Pull back the left rear tail light.

Remove the right rear tail lamp (7)as shown above.

Remove from the rear trim cover (6) 8 pieces nuts(8)

Respectively from the left tail lamp (5) and right tail lamp once each took a piece of nut.

CAUTION:

● The material should be protected during discomponent to prevent scratching the lamp.

● Never pull the cable directly.

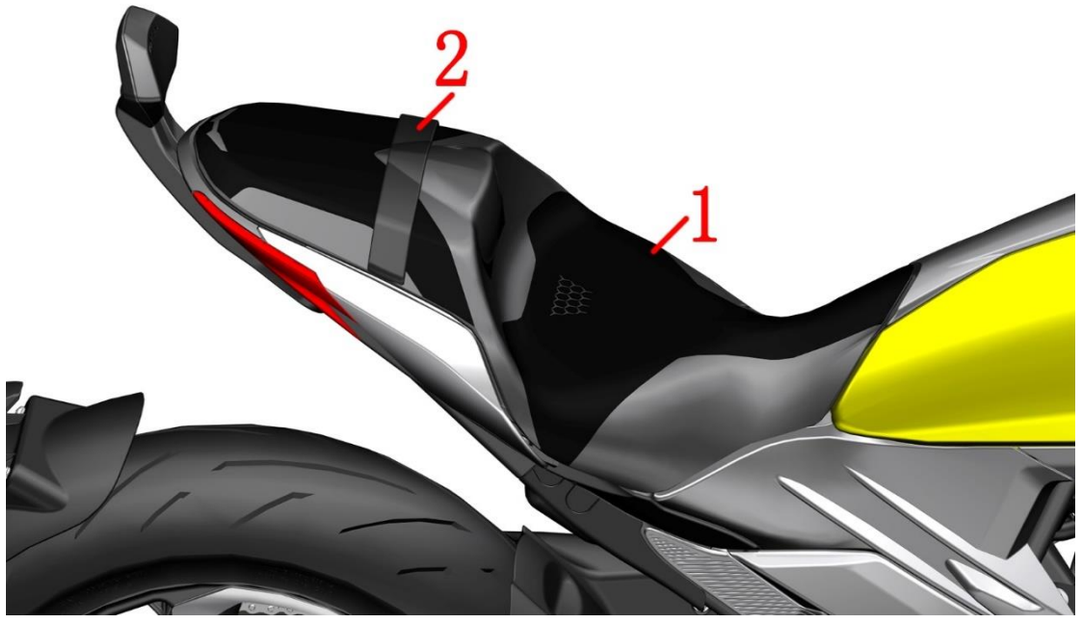

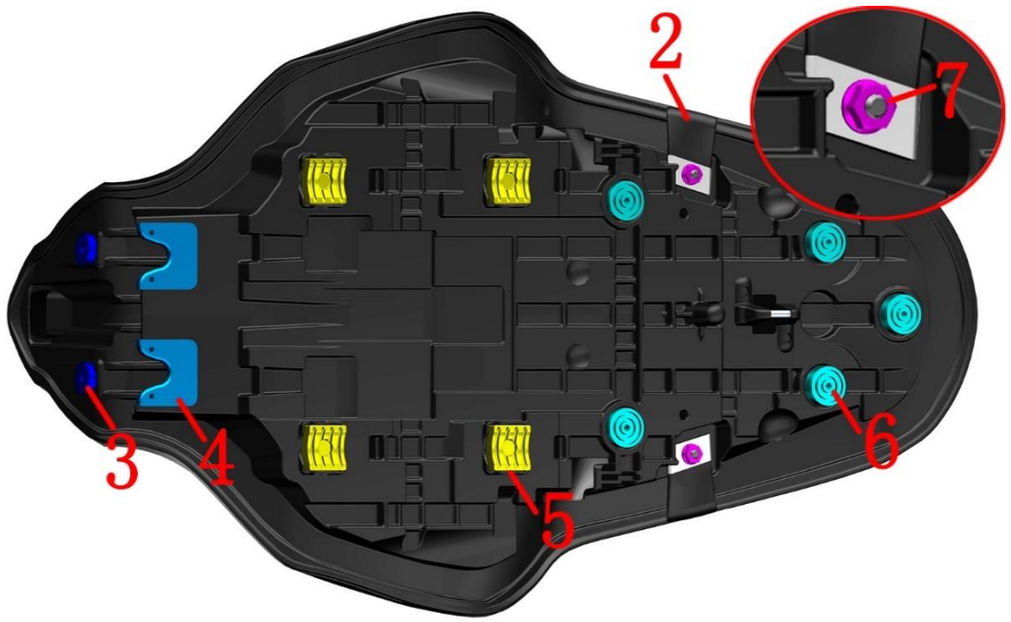

Fig.1 CUSHION COMPONENT		Cushion component	CHK ADJ	
NO.	PART NO.	PART NAME	QTY	CAUTION
1	1200100-464000	ZT310-V SEAT(2021 VERSION)	1	
2	1010502-012000	ZT310-V cushion belt	1	【1】
3	1244200-091000	ZT310-V cushion front round plastic	2	
4	1244100-024000	ZT250-S cushion front rubber	2	
5	1244300-033000	ZT350 cushion rubber	4	
6	1244100-025000	ZT250-S round cushion rubber	5	
7	1250303-040093	GB6177.1M6 (environmental color)(5 pcs/after-sale)	2	

PROCEDURE:

●Remove seat cushion

Press the unlock button ' " shortly.After the power-on self test is completed, press the "SEAT" button briefly to open the electronic cushion lock.

Grasp the seat cushion (1) and pull it diagonally upwards. At the same time, remove the cushion by moving the rear part of the cushion from side to side.

●Assembly cushion

When assembling the cushion, check whether all the cushion rubbers are complete. Insert the front part of the cushion first. After the assembly is in place, shoot the rear part of the cushion firmly. When you hear the "click" sound, it indicates that the cushion lock has been assembled.

●Cushion rubber and belt, purchased separately

If the cushion rubber aging or excessive wear of the belt can be purchased on the Zontes official website. The corresponding installation position is shown in the lower left figure.

CAUTION:

●The motorcycle should be fixed before operation.

●Cushion(1) contains all cushion rubber and the seat belt,nuts.

●Cushion can cause accidents if it is not installed properly.

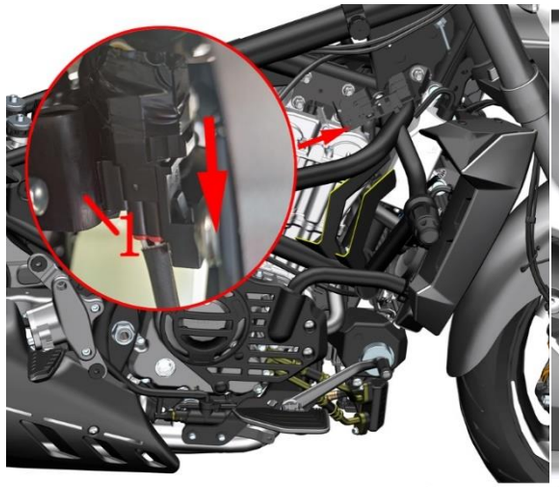

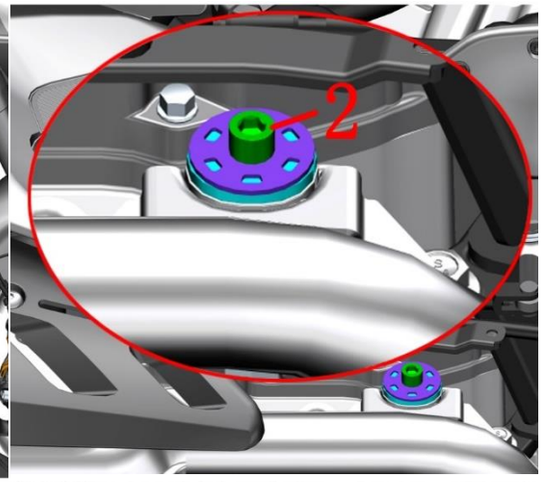

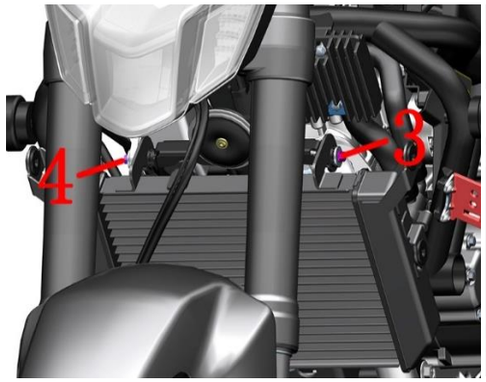

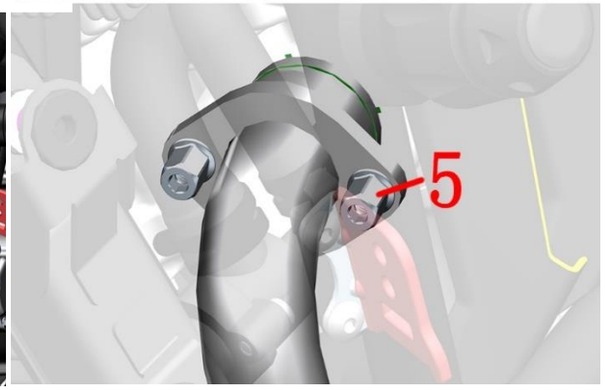

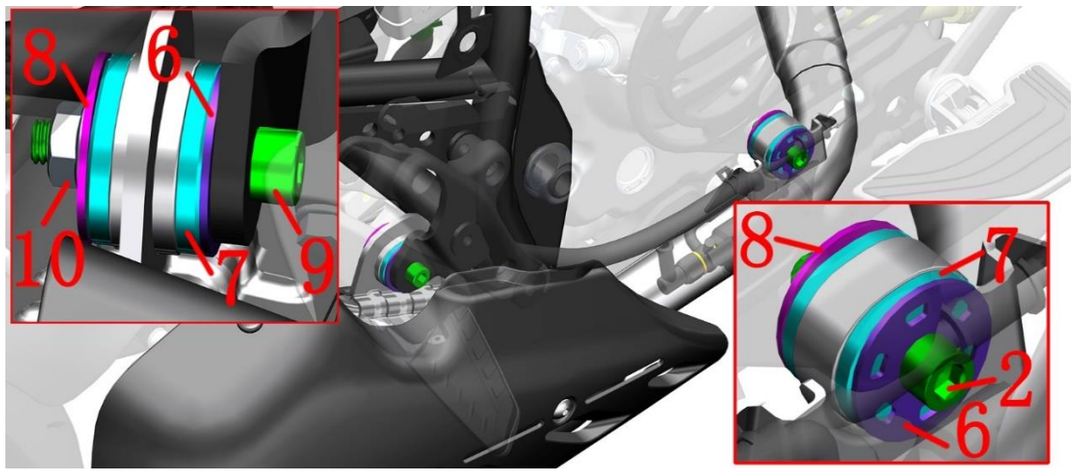

Fig.1 MUFFLER COMPONENT		Muffler component 1	CHK ADJ	
NO.	PART NO.	PART NAME	QTY	CAUTION
1	1224300-088000	ZT350-V1 EFI relay holder	1	
2	1250205-023000	GB70.1 inner hexagonal M8×35 (color Zinc)	1	
3	1251112-002093	M6×30 Hexagon flange bolts (color zinc)	1	
4	1251112-003093	M6×45 Hex flange surface 9.8 bolt (color zinc)	1	
5	1251300-058093	Inner hexagonal nut M8 (color zinc)	2	
6	1251500-099000	ZT350-GK muffler stainless steel gasket (ϕ9.1×ϕ33×1.5	2	
7	1244300-022000	ZT350-GK-H1 muffler suspension hollow cushioning ru	2	
8	1251700-207000	ZT350-GK muffler stainless steel flanging bushing (ϕ9 ×ϕ12×20.5×ϕ9.1×ϕ33×1.5)	2	
10	1250205-093093	GB70.1M8×40 (environmental color zinc)	1	
11	1250303-011093	GB6177.1M8(color zinc)	1	

PROCEDURE:

●Muffler assembly

Use one hand to support the fixing seat (1) above and inside the right guard bar, pull the oxygen sensor plug in the direction of the arrow with the other hand, remove the plug from the fixing seat, and then pull out the plug.

Refer to "Radiator trim cover assembly 1" in the chapter on cooling system components to remove the radiator trim cover. Loosen the bolts (3) and (4) on both sides of the main water tank with an 8# sleeve, push the radiator assembly forward to expose 2 pieces of nuts (5), and then remove them with a 6# inner hexagon.

Remove the bolt (2) in the middle of the muffler with a 6# inner hexagon. In order to facilitate the next operation, this bolt needs to be manually screwed back for about 5 turns.

Use a 13# Torx wrench to fix the nut (10) on the back and remove the bolt (9) with a 6# hexagon socket on the outside.

After supporting the front elbow and rear section of the muffler assembly, remove the bolt (2) in the middle, and remove the washer (6).

Remove the muffler assembly.

CAUTION:

●The material should be protected during disassembly to prevent damage to the paint.

●The muffler should be completely cooled before it is disassembled.

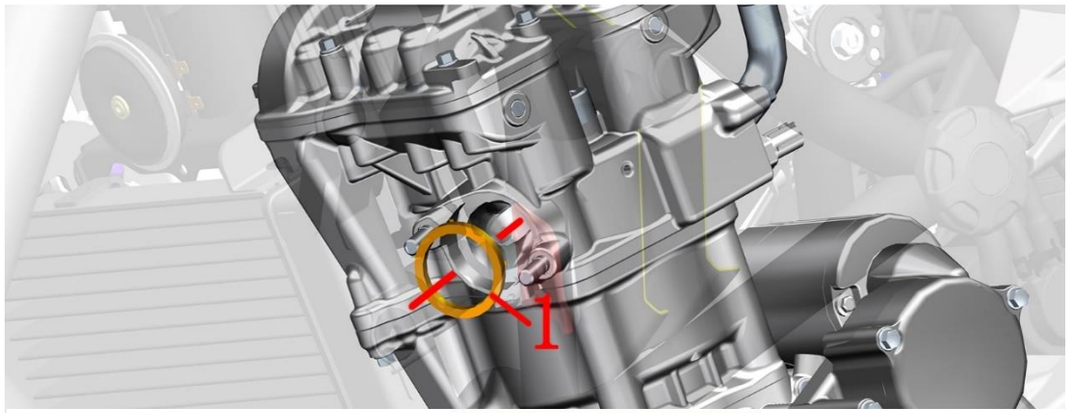

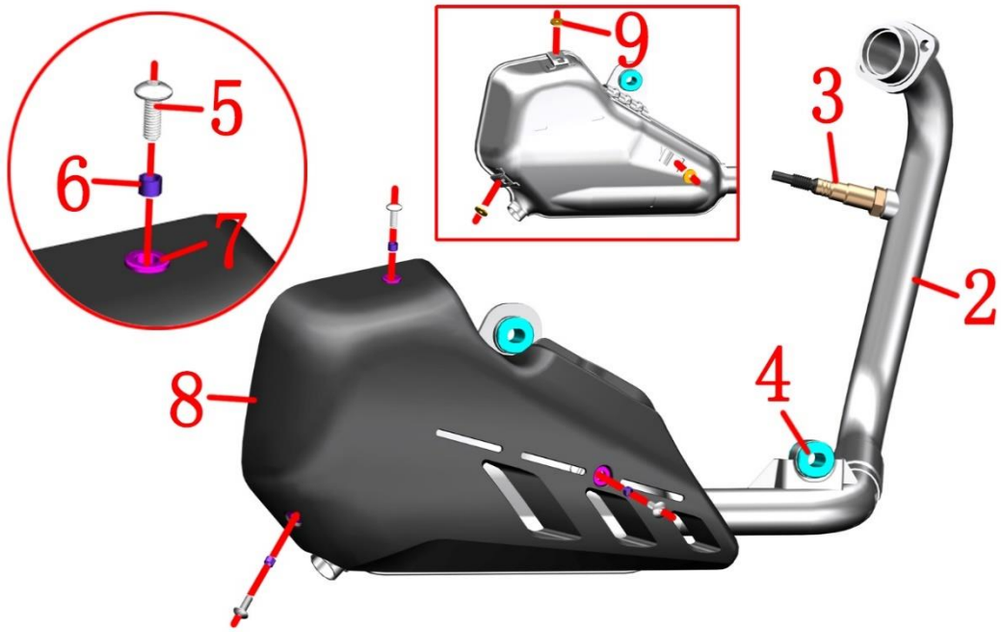

Fig.2MUFFLER COMPONENT		Muffler component 2(Euro V)	CHK ADJ	
NO.	PART NO.	PART NAME	QTY	CAUTION
1	1070100-499000	ZT350-GK engine exhaust outlet seal	1	
2	4084300-013000	ZT350-V1-J2 Muffler (Europe Ⅴ/Bosch EFI version)	1	
3	1050970-011000	LSF oxygen sensor(L=635mm)	1	
4	1244300-022000	ZT350-GK-H1 muffler suspension hollow cushioning rubber	2	
5	1251100-102000	Non-standard bolt M6×16 (304 stainless steel)	3	
6	1274100-018000	ZT250-S Anti-hot plate sleeve, muffler	3	
7	1246400-317000	ZT368T-G muffler hot plate rubber buffer(5 pcs/after-s	3	
8	4044302-039051	ZT350-V1 muffler decorative cover (dark gray matte)	1	
9	1270301-023000	Stainless steel heat insulation mat 6×20×1.6(5 pcs/afte	3	

PROCEDURE:

●Muffler assembly

Take off the exhaust seal pad(1) from the exhaust.Take off cushioning rubber(4),pay attention to the hollow side of the cushioning rubber(4) facing inward.

●Decorative cover

After holding the decorative cover firmly, use 4# inner hexagon to remove 3 bolts (5), and take off asbestos pad (9).

Remove the decorative cover assembly.

Remove the bushing (6) and the cushion rubber (7) from the decorative cover (8).

●Oxygen sensor

Remove the oxygen sensor with an 22# open wrench.

Test method:

In case of poor engine performance, unstable idle speed, high fuel consumption and incorrect air-fuel ratio, check the oxygen sensor. The fault code can be read through the diagnostic instrument to confirm whether the oxygen sensor is faulty.

Locate the plug of the oxygen sensor near the top of the right body guard bar and pull it off. Use a multimeter to measure the resistance of the heating element of two white wires to 9 ± 2k Ω;or the measured current shall be ≤ 2.1A. Otherwise, it can be judged as oxygen sensor fault. The ceramics inside the oxygen sensor are hard and brittle. It is forbidden to knock with hard objects or blow with strong gas, otherwise it will be easy to cause damage.

Or remove the oxygen sensor and observe the color of the top part of the head, which is normally light gray. If it is white, it indicates that silicon poisoning has been damaged and needs to be replaced. If it is black, it indicates that there is carbon deposit, which can be cleaned and used again; If it is brown yellow, it is lead poisoning and needs to be replaced.

Assembly precautions:

The thread of the new sensor is coated with special paste thread anti sintering agent to prevent air leakage and facilitate subsequent disassembly. If there is no problem after removing the old one for inspection, an appropriate amount of anti sintering agent shall also be applied to the thread before installation.

Torque standard：44N.m.

CAUTION:

●The muffler should be completely cooled before it is disassembled.

●Prevent foreign matter from ente**ring** the interior of the muffler.

●The muffler nozzle needs to be protected. If there is any deformation, it may cause air leakage.

●It is recommended that new seals be replaced each time the muffler front assembly is removed to prevent airleakage.

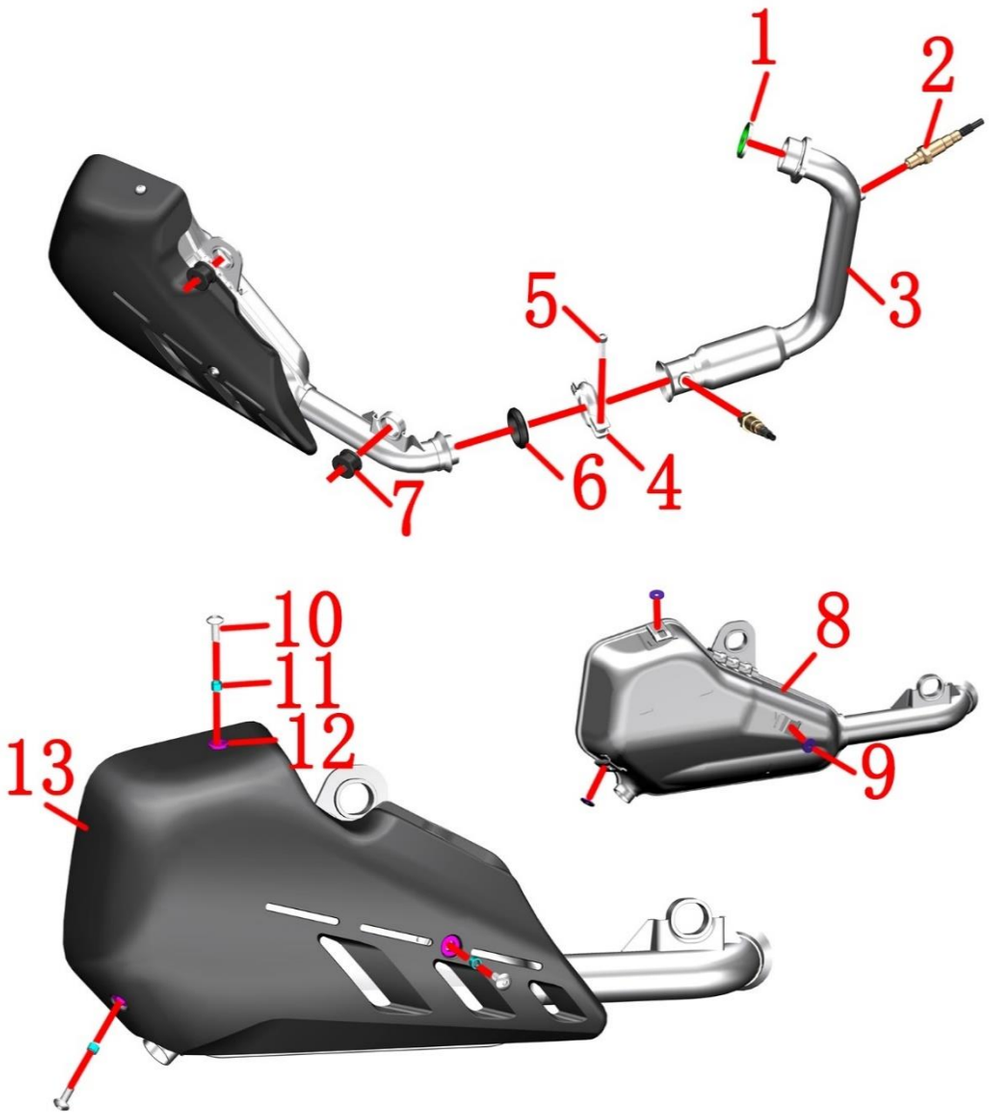

Fig.3MUFFLER COMPONENT		Muffler component 3 (Eruo V+)	CHK ADJ	
NO.	PART NO.	PART NAME	QTY	CAUTION
1	1070100-499000	ZT350-GK engine exhaust outlet seal	1	
2	1050957-025000	Bosch Oxygen Sensor LSFMH(2×2)	2	
3	4084300-031000	ZT350-V1-J2 Muffler (self-made/Europe Ⅴ/Bosch EFI version)	1	
4	1276600-082000	ZT500-T Muffler stainless steel bar clasp	1	
5	1250205-133000	GB70.1M8×35(stainless steel A2 - 70)	1	
6	1124300-007000	ZT350-GK muffler graphite gasket(38.3×51.6×11)	1	
7	1244300-022000	ZT350-GK-H1 muffler suspension hollow cushioning rubber	2	
8	4084300-030000	ZT350-V1-H3 rear muffler (self-made/Europe Ⅴ+)	1	
9	1270301-023000	Stainless steel heat insulation mat 6×20×1.6(5 pcs/afte	3	
10	1251100-102000	Non-standard bolt M6×16 (304 stainless steel)	3	
11	1274100-018000	ZT250-S Anti-hot plate sleeve, muffler	3	
12	1246400-317000	ZT368T-G muffler hot plate rubber buffer(5 pcs/after-s	3	
13	4044302-039051	ZT350-V1 muffler decorative cover (dark gray matte)	1	

PROCEDURE:

●Muffler assembly

Take off the exhaust seal pad(1) from the exhaust.Take off cushioning rubber(7),pay attention to the hollow side of the cushioning rubber(7) facing inward.

Using 6# inner hexgon removed the bolt (5),take off the bar clasp(4),then remove the front part and rear part of muffler.Take off the graphite gasket(6).

●Decorative cover

After holding the decorative cover firmly, use 4# inner hexagon to remove 3 bolts (10), and take off asbestos pad (9).

Remove the decorative cover assembly.

Remove the bushing (11) and the cushion rubber (12) from the decorative cover (13).

●Oxygen sensor

Remove the oxygen sensor(2) with an 16# open wrench.

The Oxygen sensor test method see the lase page.

CAUTION:

●The muffler should be completely cooled before it is disassembled.

●Prevent foreign matter from entering the interior of the muffler.

●It is recommended that new seals be replaced each time the muffler front assembly is removed to prevent airleakage.

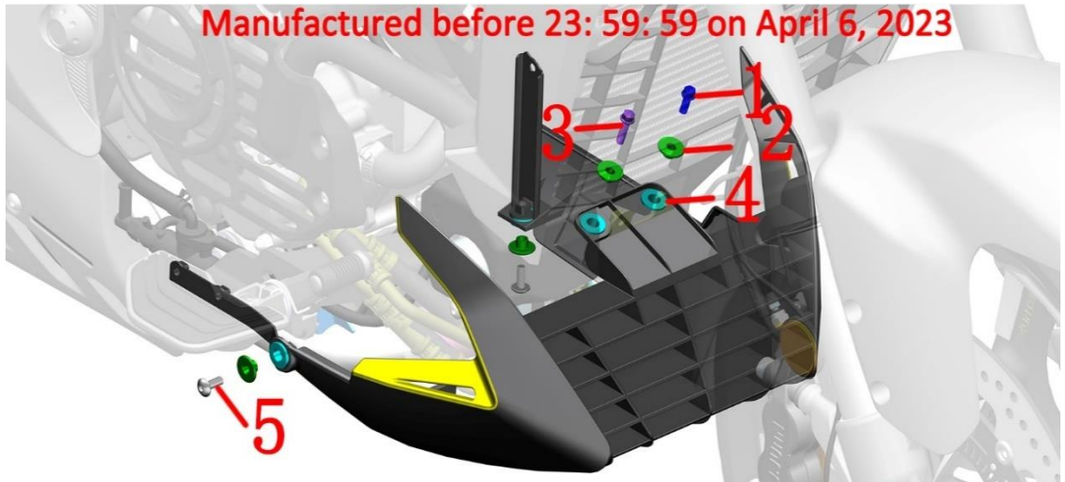

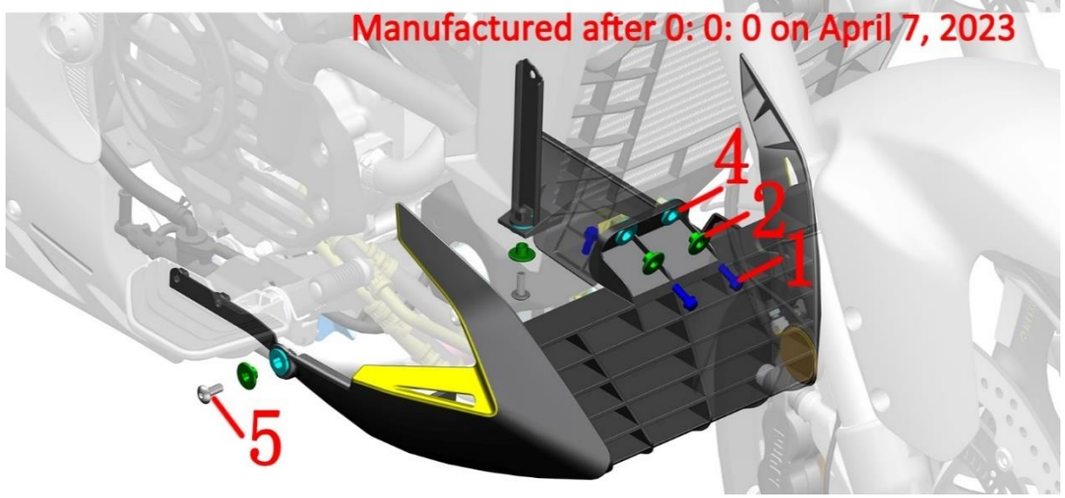

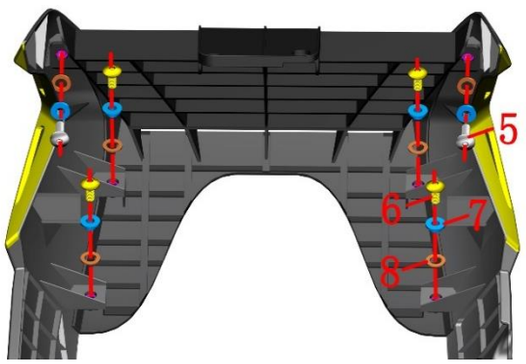

Fig.1 LOWER SHROUD COMPONENT		Lower shroud component-1	CHK ADJ	
NO.	PART NO.	PART NAME	QTY	CAUTION
1	1251112-001093	M6×16 Hexagon flange bolts (color zinc)	2	
2	1251100-061093	M6×22 Hex flang bolt thread level 8.8 (color zinc)	1	
3	1274101-015000	ZT250-S flanging sleeve(ϕ6.4×ϕ9×6 + ϕ20×2)(5 pcs/af	4	
4	1244100-137000	ZT250-S Flanging bushing buffer(5 pcs/after-sale)	4	
5	1251100-102000	Non-standard bolt M6×16 (304 stainless steel)	4	
6	1251100-101000	Non-standard bolt M6×12 (304 stainless steel)	4	
7	1274100-155095	Flanged bushing ϕ6.2×ϕ8.4×3.5 + ϕ14×1.5(5 pcs/after	6	
8	1241200-124021	flanging bushing buffer rubber (ϕ8.5×ϕ14×1)(5 pcs/at	6	

PROCEDURE:

●Lower shroud assembly

Raise the platform of the motorcycle.

After grasping the lower air deflector assembly, use 4# inner hexagon to 2 bolts (5) on the right side and bottom of left side, and remove the bushing(2).

After grasping the lower air deflector assembly then using 8# plum wrench removing the bolt (1) and bolt (3) at the middle of the lower air deflector assembly, remove the 2 pieces of bushing(2).

Take off the lower air deflector assembly.

Take off 4 pcs cushion rubber(4).

After placing the lower air deflector assembly, remove the bolt (5) and (6) on the right with a 4# inner hexagon, and remove the bushing (7) and cushion rubber (8). Separate the right part of the lower air deflector assembly from the lower air deflector assembly.

Separate the left part of the lower air deflector assembly from the middle part of the lower air deflector assembly according to the above steps.

CAUTION:

●The motorcycle support should be fixed during disassembly to prevent accidents caused by incline.

●The shroud should be supported during disassembly to prevent fracture due to uneven force.

Fig.2 LOWER SHROUD COMPONENT		Lower shroud component 2	CHK ADJ	
NO.	PART NO.	PART NAME	QTY	CAUTION
1		ZT310-V left lower shroud	1	
2	1224300-052000	ZT350-V1 lower middle shroud	1	
3		ZT310-VX right lower shroud	1	
4	1251300-063093	Plywood M6×11×15(color zinc)	6	
5	1250104-019097	GB16674M6×40 (chrome/HH)	2	
6	1274300-063000	ZT350-V1 lower docorative cover right bracket	1	
7	1251112-005093	M6×75 Hexagon flange bolts (color zinc)	1	
8	1274300-062000	ZT350-V1 lower docorative cover left bracket	1	
9	4044302-526000	ZT350-V1 lower middle shroud after-sales kit	1	after-sale

PROCEDURE:

●Lower shroud assembly

Remove the splint nut (4) from the left part (1), middle part (2) and right part (3) respectively.

●Lower shroud bracket

After grasping the right bracket(6),then using 8# sleeve remove 2 pcs bolts(5),take off the right bracket.

After grasping the left bracket(8),then using 8# sleeve remove the bolt(7),take off the left bracket.

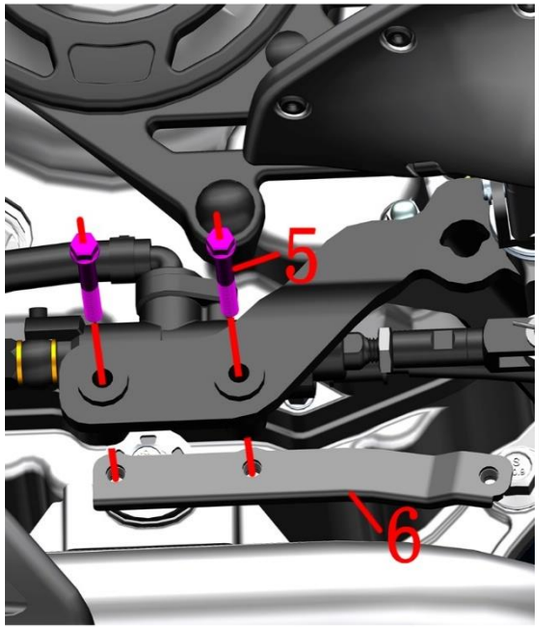

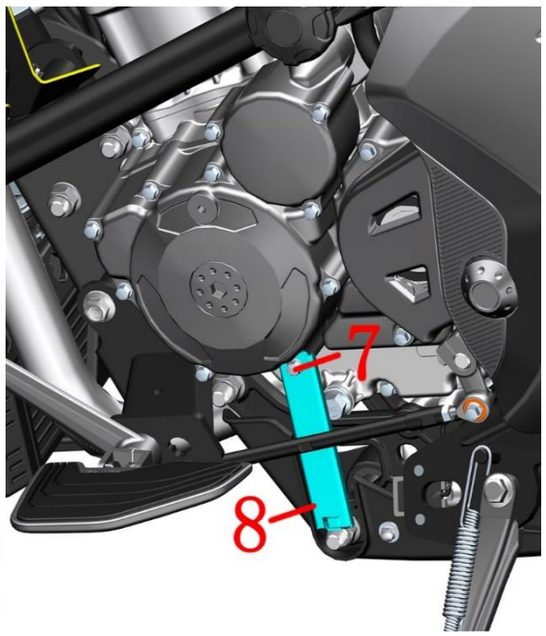

CAUTION:

●The shroud should be well protected during disassembly to prevent breakage or paint scratches caused by uneven force.

●The old model is manufactured before 23: 59: 59 on April 6, 2023 and the new model starts at 0: 00 on April 7. The old model can not be interchanged,the old model if you need to replace the middle or bracket need to buy " 40443-02-526000ZT 350-V 1 lower middle shroud after-sales kit", otherwise can not be installed.