ZT703-F
(2024&2026 models)
Service Manual

2026-06-23

Preface

All the information, illustrations, photos, etc. collected in this manual are compiled based on the 21- inch ZT703-F National IV ***high-end version***. However, due to the continuous improvement of products and other changes, your motorcycle may have some inconsistencies with this manual. For color or upgrades, please refer to the part codes of the official website. This manual will not list them in detail; if the part names in this manual are inconsistent with the official website, the official website shall prevail. Individual parts of different displacements with different shapes or sizes but the same disassembly and assembly methods are not listed one by one in this manual. Some parts of the 2026 model differ in appearance from those of the 2024 model, but the disassembly and assembly methods are the same, so the disassembly steps of the 2024 model can be referred to.

If some of the contents of this manual are insufficient, please refer to the " User Manual" that comes with the vehicle. The latest version of the driving manual can be downloaded in PDF format in the corresponding model introduction on the ZONTES official website. Guangdong TAYO Motorcycle Technology Co., Ltd. reserves the right to modify specifications, designs, etc. at any time without prior notice to you, and does not assume any responsibility for this.

© Guangdong TAYO Motorcycle Technology Co., Ltd.
all rights reserved

User Notice

This manual is compiled by Guangdong TAYO Motorcycle Technology Co., Ltd. for the guidance of dealers or service personnel . This manual cannot provide more detailed knowledge about motorcycles and is only used as a maintenance reference. If you do not have the corresponding knowledge such as electrician and mechanic, improper assembly or maintenance failure may occur during repair.

The body parts of this vehicle, you should use neutral vehical wash liquid or tap water or diesel, kerosene, etc. Acidic or alkaline vehicle wash liquids will cause irreversible corrosion to the paint, electroplated surface, anodized surface, etc. on the surface of the parts ; gasoline will cause premature aging or hardening of sealants, gaskets , rubber parts, etc., reducing the service life . Use non-woven cloth without residue for wiping. Ordinary rags may have cloth scraps or wool left on them, affecting assembly or causing other adverse effects.

Our company will try its best to update this manual in a timely manner after any changes are made to the product.

The following are the meanings of the icons in this manual:

DANGER	Failure to comply may result in personal injury or death of the driver or maintenance personnel; or cause serious damage to spare parts, shortening of service life, etc.
WARNING	Failure to comply may result in personal injury or death to the driver or maintenance personnel; or may result in damage to spare parts, abnormality, etc.
CAUTION	Failure to comply with warnings may result in personal injury to the driver or maintenance personnel; or matters requiring special attention during disassembly and assembly
	Indicates that there is a torque requirement at this location
NEW	Indicates that the part needs to be replaced after disassembly
	To facilitate electronic reading, if there is a symbol on the right side of the step, you can click the symbol to quickly jump to the corresponding chapter

Contents

Preface 2

User Notice 3

Contents 4

1. Vehicle Information 12
    Pre-Service Notice 12
    Motorcycle body identification characters 13
    Technical specifications 14
        Front wheel /steering system 14
        Rear wheel / suspension system 14
        Braking system 14
    Battery/Charging System 14
    Lighting/Instrument/Switch Description 15
    Tightening torque 16
        Bolt tightening torque for general fastening parts 16
    Cable/cable/pipeline /electrical components distribution diagram 18
        1. Lighting distribution map 18
        2. Throttle and clutch cable 18
        3. Brake master cylinder and brake oil pipe 19
        4. Calipers, brake hoses and wheel speed sensors 20
        5. Braking system parts distribution diagram 21
            5.1 J.JUAN braking system 21
            5.2 Brembo braking system 22
        6. Fuel supply system 23
            6.1 Fuel evaporation 23
            6.2 Fuel supply 24
        7. Distribution of cooling system components 25
        8. Electrical device layout diagram 27
        9. Intake and exhaust systems 29
            9.1 Intake system 29
            9.2 Exhaust system 30
    Tools 31
    Expansion Nail Description 32

2. Maintenance 33
    Pre-Service Notice 33
    Maintenance of periodic tables 34
    List of daily vehicle operation inspection items 36
    Air filter element replacement 37
        1. Remove the corresponding parts 37
        2. Replace the filter element of the air filter 37
        3. Check the waste oil pipe 37
        4. Reassemble the corresponding parts 37
    Muffler overhaul and maintenance 38
        1. Disassembly of the engine guard 38
        2. Check the muffler 38
        3. Check the muffler installation bolts 38
        4. Disassembly of the muffler 39
        5. Reassembly of muffler and engine guard 40
    Inspection and replacement of spark plugs 40
        1. Disassemble the spark plug 40
        2. Check the spark plug 41
        3. Install the spark plugs 41
    Overhaul and maintenance of cooling systems 41
        1. Check the coolant 42
        2. Addition of coolant (antifreeze) to the auxiliary tank 42
        3. Addition of coolant (antifreeze) to the main water tank 42

4. Drain the coolant 43
5. Check if the fins of the radiator tank are deformed or if the air ducts are blocked 43
6. Overhaul and maintenance of oil coolers 43
7. Check the water/oil pipes for leakage and aging 44
Engine Oil and Filter Replacement 45
1. Put the oil 45
2. Replace the Fine Filter 45
3. Add oil 45
4. Confirm the Oil Level 46
Brake, Clutch, cable clearance adjustment 47
Adjust the clutch handle and clutch line 47
1. Check 47
2. Adjust the clutch cable clearance 47
3. Lubricate the clutch cable 47
4. Adjust the clutch handle 47
5. Replace the clutch handle 47
Adjust the brake lever, brake pedal, throttle cable 48
1. Check 48
2. Adjust the throttle cable clearance 48
3. Cables for lubricating the throttle 48
4. Adjust the brake lever and brake pedal 49
5. Replace the brake lever and brake pedal 49
Idle Speed 49
Check the idle speed: 49
Fuel evaporative pollutant control system 49
703F fuel evaporates 49
Fuel lines 49
1. With the help of an endoscope with LED light, the fuel line is inspected for leaks 49
2. Replace the high-pressure fuel line 50
3. Fuel pump 51
3.1 Fuel pressure is measured using an fuel pressure gauge 51
3.2 Simple Tested fuel pumps 51
4. Abnormal fuel pressure disposal 51
Chain, rear flat fork wear block 53
Maintenance and Inspection 53
1. Check 53
2. Maintenance 53
Replace the chain 53
Adjust the chain 53
Replace the rear flat fork wear block 53
Braking system 55
J.JUAN Diagram of braking system components： 55
Brembo Diagram of braking system components： 55
1. Check the brake components 56
2. Check the front and rear brake switches 57
2.1 Check the brake switch 57
2.2 Replace the brake switch 57
3. Lubricate the brake handle and brake pedal moving parts 57
3.1 Lubricate the front brake handle 57
3.2 Lubricate the rear brake pedal 57
3.3 Replace the brake lever and brake pedal 57
4. Adjust the brake lever and brake pedal 58
5. Replace the brake pads 58
5.1 Replace the front brake pads 58
5.2 Replace the rear brake pads 59
5.3 Brake pads rattle 60
6. Replace the brake disc 60
6.1 Replace the front brake disc 60
Brake hoses 60

Brake fluid 60
1. Brake fluid is added to the front and rear disc brake main cylinders 60
1.1 Add front brake master cylinder brake fluid 60
1.2 Add rear brake master cylinder brake fluid 61
2. Change the brake fluid 61
2.1 Replace the front brake fluid 61
2.2 Replace the rear brake fluid 61
3. Brake system exhaust 62
Rims and tires 62
1. Check the tires 62
2. Replace the tires 63
Steering mechanism 63
1. Check the steering mechanism 63
2. Adjust the steering mechanism 63
3. Maintain steering bearings 64
4. Fault 64
Front shock absorber 64
1. Check the appearance 64
2. Check the shock absorption performance 65
3. Adjust the preload 65
4. Shock absorber before disassembly 65
5. Rectify the front fork tube 65
6. Troubleshooting 65
Rear shock absorber 66
1. Check 66
2. Adjust the preload 66
3. Replace the rear shock absorber 66
Bolt/Nut/Fasteners 67
Side brackets 67
1. Check 67
2. Lubrication 68
2024 model 68
2026 model 69
Main bracket 70
1. Check 70
2. Disassemble the main bracket 71
3. lubrication 72
Replace the main bracket return spring post 73
Shift lever rocker arm height adjustment 73
Inspection of sound, light and electric devices 74
1. Check 74
2024 model 74
2026 model 77
2024 model charged 79
2026 model charged 80
2. Headlamp light height adjustment 81
3. Fuse box 82
4. Troubleshooting 83
4.1 Horn 83
4.2 Light 84
4.3 Windshield failure 85
4.5 2024 model Left hand switch 87
4.6 Heated Handgrip (2026 Model) 88
4.7 Electronic Throttle (2026 Model) 88

3. EFI system 89
Pre-Service Notice 89
Fault Codes 90
1. Read the fault code through the instrument 90
2. Read the fault code through the diagnostic instrument 90
3. Common fault code information 91

2024 model 91
2026 model 92
4. Clearing fault codes 92
4.1 Manual Clear 92
4.2 Clear using diagnostic instrument 92
EFI Parts 93
EFI parts layout drawing 94
Fault diagnosis and troubleshooting of EFI parts 95
1. Tilt switch 95
Troubleshooting process 95
Check 96
2. OBD interface 96
3. Fuel pump 96
4. Canister solenoid valve 98
5. Relay (KH-1A4T-R) 98
6. Injector 99
7. Oxygen sensor 102
7.1 Detect 102
7.2 Replace 103
8. Starting relay 104
9. Water and oil share sensors 104
10. ECU 105
11. Throttle body 106
11.1 Common fault signs 106
11.2 Disassembly 106
11.3 Troubleshoot the process 106
2024 model 106
2026 model 107
11.4 Sensor 108
11.4.1 Throttle position sensor (2024 model) 108
11.4.2 Inlet air pressure sensor (2024 model) 108
11.4.3 Stepper motors (2024 model) 109
External intake air pressure sensor (2026 model) 109
12. Ignition coil 110
13. Secondary make-up valve 111
14. Crankshaft position sensor 111
15. Air Filter Intake Air Temperature Sensor 112
Troubleshooting process when the engine does not start and there are no signs of landing 113
Troubleshooting process when the engine does not start and there are signs of landing 114
Poor acceleration 114
The idle speed of the hot motocycle is high 115
The cooling motocycle is unstable at idle 115
The idle speed is unstable and easy to stall 116
EFI fault indicator is always on analysis flow chart 117

4. Ignition system 118
Pre-Service Notice 118
Troubleshooting 119
There are no sparks from the spark plugs 119
Ignition system layout 120
Ignition system check 121
Ignition coil 121
Crankshaft position sensor 121
Disassembly 121
Installation 121
Detect 121

5. Starting system 122
Pre-Service Notice 122
Troubleshooting 122
1. Starter relay 122

2. Starter motor 123
3. The starter motor runs slowly 123
4. The starter motor is working normally, but the engine cannot start. 123
Starting system layout 123
Electrical schematic diagram of the starting system 124
Starter motor 124
1. Remove the starter motor 124
2. Disassemble the starter motor 124
Examination 125
Starter motor front cover: 125
Starter motor back cover: 125
Electric pestle: 126
Check the starter relay 126
1. Operation inspection 126
2. Check the relay coil 126
2.1 Input line 126
2.2 Ground wire 126
3. Check the starter relay 127
4. Disassemble and assemble the starter relay 127

6. Fuel supply system 128
Pre-Service Notice 128
Fuel tank disassembly 129
1. Disassemble the fuel tank assembly 129
2. Disassemble the fuel pump 129
3. Disassemble the fuel level sensor 130
4. Disassemble the external materials and parts of the fuel tank assembly 130
Examination 130
1. Fuel pressure test 130
2. Fuel pump inspection 130
3. Fuel level sensor 130

7. Cooling system and air intake system 131
Pre-Service Notice 131
Troubleshooting 131
1. The engine temperature is too high: 131
2. The engine temperature is too low： 131
3. Coolant leakage 131
Cooling system distribution map 132
Schematic diagram of coolant flow 134
Disassembly of the cooling system 135
1. Disassemble the oil cooler and tubing assembly 135
2. Disassemble the main water tank assembly 135
3. Disassemble the water pipe and auxiliary water tank components 136
Cooling system accessories 137
1. The main water tank 137
2. Water tank filler 138
2.1 Overall tightness inspection 138
2.2 Pressure relief valve inspection 138
3. An auxiliary water tank 138
4. Oil cooler 138
4.1 Air tightness inspection 138
4.2 Ventilation test 138
5. Thermostat 138
5.1 Inspection of thermostat 138
5.2 Fault phenomenon 138
6. Water pipes 138
7. Tubing 138
Air intake system 139
Disassembly of the air filter 139
1. Disassembly of the carbon canister 139

2. Disassembly of the air inlet cavity assembly on the left side of the air filter 139
3. Disassembly of the air filter housing 139
Exploded view of air filter accessories: 141
Air Filter System Accessories: 142
1. A carbon canister 142
2. YH secondary air supply valve 142
3. The air inlet cavity assembly on the left side of the air filter 142
4. Connecting pipes 142
5. Air filter housing 142

8. Braking system 143
Pre-Service Notice 143
Troubleshooting 144
The brake handle is soft 144
The brake handle is hard 144
Disassemble the disc brake master cylinder and caliper 144
Disassemble the front disc brake main pump 144
Disassemble the rear disc brake main pump 144
Disassemble the front disc brake caliper 145
Disassemble the rear disc brake caliper 145
Brake hose and wheel speed sensor 146
Wheel speed sensor and inductive ring gear clearance check 146
Remove the brake hose and wheel speed sensor 146
Release the brake fluid 146
FMC-HU and FC-HU. Wheel speed sensor (front wheel) 147
RC-HU and RMC-HU. Wheel speed sensor (rear wheel) 148
ABS system arrangement 148
ABS hydraulic control unit 148
Disassembly 148

9. Battery/charging system 150
Pre-Service Notice 150
Troubleshooting 151
Charging system layout diagram 152
2024 model 152
2026 model 152
Electrical schematic 153
2024 model 153
2026 model 153
Accumulator disassembly and assembly 154
1. Disassembly 154
2. Check 154
3. Charge 154
Charging system check 154
1. Creepage test 154
2. Check the charging voltage 154
3. Magneto stator charging coil inspection 155
Rectifier 155
Dismantle the rectifier 155
Rectifier detection 155

10. Front fork assembly 156
Pre-Service Notice 156
Exploded view of the handlebar 157
Front fork exploded view 158
Lower connection board exploded view 159
Replace the handlebar 160
1. Remove the handlebar guard 160
2. Remove the handlebar assembly 160
3. Install the handlebar assembly 160
Replace front wheel 161
1. Remove the front wheel assembly 161

2. Install the front wheel assembly 161
Exploded view of the front wheel assembly: 162
Inspection and maintenance of front wheel components 163
1. Disc brake discs 163
1.1 The service life of the disc brake disc 163
1.2 How to replace the disc brake disc 163
2. Front wheel oil seals and bearings 163
2.1 The service life of the front wheel oil seals and bearings 163
2.2 How to replace the oil seals and bearings of the front wheels 163
3. Front rims and tires 163
3.1 The service life of the front rim and tires 163
3.2 How to replace the front rim and tires 163
3.3 Dynamic balance 163
Replace the front shock absorber 164
1. Remove the front fender assembly and lower fender assembly 164
2. Remove the left and right front shock absorbers 164
3. Replace components such as shock absorbers, front fenders, and front wheels 165
4. Adjust the front shock absorber 165
4.1. Disassemble parts in advance 165
4.2. Remove the faucet lock 165
4.3. Remove the upper plate and the direction handlebar pad 165
4.4. Disassemble the lower panel assembly 166
4.5. Install the lower board component 166
4.6. Install other disassembly components 166

11. Rear fork component 167
Pre-Service Notice 167
Replace the rear wheels 168
1. Disassemble the rear wheel assembly 168
2. Remove the brake disc 168
3. Remove the sprocket seat 168
4. Install the rear wheel assembly 168
Exploded view of the rear wheel assembly： 169
Rear wheel assembly inspection and maintenance 169
1. Disc brake discs 169
1.1 The service life of the disc brake disc 169
1.2 How to replace the disc brake disc 170
2. Rear wheel oil seals and bearings 170
2.1 Service life of rear wheel seals and bearings 170
2.2 How to replace the oil seals and bearings of the rear wheel 170
3. Rear rims and tires 170
3.1 The service life of the rear rim and tires 170
3.2 How to replace the rear rim and tires 170
3.3 Balancing 170
Replace the rear flat fork 170
1. Disassemble the chain box and chain guard. 170
2. Remove the rear flat fork 171
3. Replace the rear flat fork 171
Shock absorption after replacement 171
1. Dismantle the shock absorber 171
2. Put back the shock absorber 172
3. Rear shock adjustment and inspection 172

12. Disassembly and assembly of vehicle covers 173
Removal of the windshield 174
Disassembly of the hood panel 174
Removal of the windshield lining 174
Disassembly of the windshield lift assembly 175
Disassembly of instrument trim cover assembly 175
Disassembly of instrument components 176
Disassembly of the head lining assembly 176

Disassembly of the wiring board on the right side 177
Disassembly of the surrounding lower assembly 177
Removal of the left cover of the frame 178
Disassembly of the right cover of the frame 178
Disassembly of the guard bar assembly 179
Disassembly of the upper part of the enclosure 179
Disassembly of the head bracket assembly 180
Removal of the seat cushion 180
Removal of the rear armrest 180
Removal of the rear position lights 181
Dismantling of the left and right tail skirts 181
Removal of the rear fender 182

1. Vehicle Information

Pre-Service Notice

1. Use high-quality tools or special tools and fixtures designed by our company. Using inferior tools may cause damage to parts, coating shedding, inadequate assembly, etc.
2. O-rings, paper gaskets, copper gaskets, component sealing rings, etc. used for sealing must be replaced before assembly.
3. Fasteners with torque requirements need to use a torque wrench to check the torque; those without torque requirements refer to the general torque values recommended for general fasteners.
4. Clean before assembly; check whether the assembly is correct and in place after assembly.
5. The vehicle should be parked in a balanced position and attention should be paid to safety during disassembly and assembly, including but not limited to the use of electric tools, hand tools, pneumatic tools, hydraulic tools, and handling; avoid contact with skin, eyes, burns, etc.
6. All types of replaced oils, liquids, batteries, etc. must be collected and handed over to qualified institutions for disposal; it is prohibited to dump them at will to pollute the environment or water sources.
7. Swallowing or inhaling coolant, brake fluid, etc. will cause certain harm to the human body. Wash hands, face and any exposed skin thoroughly after each addition. If swallowed by mistake, contact the poison control center or hospital immediately; if inhaled, go to a ventilated environment immediately. If accidentally splashed into the eyes, rinse the eyes immediately with plenty of running water and seek medical attention or treatment in time. Keep away from children and pets.

Of the precautions and basic requirements for preventing accidental injuries; it is not possible to list all situations in detail. During the disassembly and assembly process, you must remain vigilant to prevent accidents.

Motorcycle body identification characters

①Vehicle identification code VIN, the VIN code is engraved on the side of the front steering tube of the right frame
②The nameplate is on the right side of the frame
③The muffler regulation code is at the end of the front section of the muffler
④The engine identification code is engraved on the top of the right crankcase

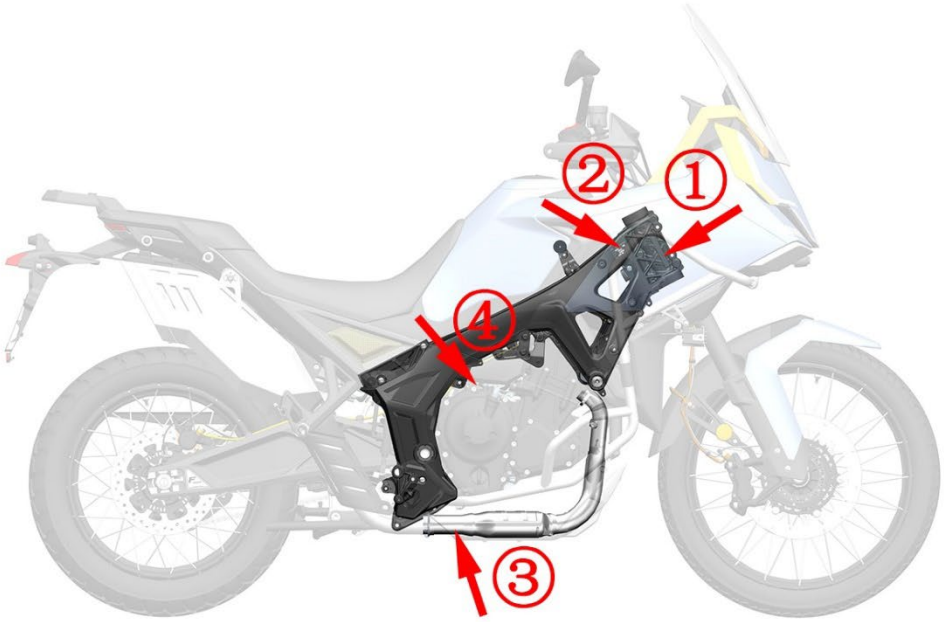

Technical specifications

Item		Specifcation	
Complete vehicle	Front tire	High seat version: 90/90-21 Low seat version: 120/70-R19	
	Rear tire	High seat version: 150/70R18 Low seat version: 170/60-R17	
	Front rim specifications	High seat version: MT2.15×21 Low seat version: MT:3.5×19	
	Rear rim specifications	High seat version: MT4.25×18 Low seat version: MT: 4.5×17	
	Brake fluid	DOT4 0.22L	
	Oil consumption	Replace the fine filter:	3.4 L
		Without replacing the fine filter:	3 L
Engine	Idle speed (r/min)	1500±100	
	Fuel	9 5 and above	
Spark plug	Spark plug model	BN8RTIP-8	
	Clearance	0.7 ～ 0.9mm	
	Resistance (kΩ)	3 ~ 7.5	
Cooling system	Total coolant usage	1.9 L	
	Thermostat opening temperature	80～84℃(176 ～183.2F)	
	Thermostat fully open temperature	95℃(203F)	
	Thermostat opening stroke	≥8 mm (0.31 in)	
	Coolant Type	Ethylene glycol + distilled water	

Front wheel /steering system

Item		Standard	Limit value
Tread depth		-	≥1.6mm (0.063 in)
Standard tire pressure at normal temperature		250kPa	-
Front rim	Radial runout	-	<1mm
	Axial runout	-	< 1mm

Rear wheel / suspension system

Item		Standard	Limit value
Tread depth		-	≥1.6mm
Standard tire pressure at normal temperature		250kPa	-
Rear rim	Radial runout	-	<1mm
	Axial runout	-	< 1mm
Chain	Size/link	525/126th section	-
	Relaxation	3 5-45	-

Braking system

Item		Standard	Limit value
Front disc brake	Brake fluid	DOT4	-
	Brake pad usage limit	-	Bottom of the tank
	Brake disc thickness	4.5 mm	＜4.0 mm
Rear disc brake	Brake fluid	DOT4	-
	Brake pad usage limit	-	Substrate
	Brake disc thickness	4.5 mm	＜4.0 mm

Battery/Charging System

Item			Standard
Battery	Type		Lithium battery
	Capacity		6 Ah
	Battery self-discharge current		≤ 1mA
	Voltage	Fully charged	13.2 ~ 13.4V
		voltage required when not installed	≤12.8 V
		Charging voltage required for loading	≤12V
	Charging Mode	Charging voltage	14.6V
		Maximum charging current	5A
		Charging time	2 hours
Alternator (Magneto)	Power	14V 30A 5000rpm	-
	Charging coil resistance (20℃)	0.2～0.6Ω	-

Lighting/Instrument/Switch Description

Item			Specification
Lighting (LED)	Headlight	High beam	12V ～ 22W
		Low beam	12V ～ 22W
	Front position lights		12V ～ 9.3W
	Front left (right) corner light		12V ～ 8.7W
	Front left (right) fog lamp		White light: 12V ~ 13W Yellow light: 12V ~ 16W
	Rear position lights		12V ～ 5.5W
	Front left (right) turn signal		12V ～ 3.5W
	Rear left (right) turn signal		12V ～ 2.2W
	Brake light /tail light/license plate light		12V ～ 2.9 / 3.2 / 0.7W
Insurance	LCM		25A
	ECM		15A
	Constant power supply		15A
	ABS hydraulic control unit motor		25A
	Hydraulic control unit ECU		10A
	Oil Pump		10A
	Start up		10A
	ABS		10A
	Assistance		10A
	Other		10A
	Spare		2 5A *1, 1 5A*1, 1 0A*1, 1 A*1
Water temperature sensor	Normal temperature		1.5 ～ 4.0KΩ
Fuel tank level sensor	Null		40±2Ω
	Full		300±5Ω

Tightening torque

Bolt tightening torque for general fastening parts

Bolt Specification	Torque Standard（N.m）	Remarks
ST3.9 Self-tapping screw	1.3～1.8	Cover
ST4.8 Self-tapping screw	2.1～3	Air Filter Housing
M4 bolts and nuts	1～1.5	Handlebar switch/Clutch switch/Brake switch bolt/Nut/Hand guard bracket
M5 bolts and nuts	3～4	Fog Light / Tire Pressure Main Unit / Right Frame Wire Plug Fixing Plate / Hand Guard / Rear of Muffler Anti-Scald Plate / Fuel Tank Lock
GB6170M6	5～7	Instrument
GB70.2M6	3～5	Fog Light
GB6177.1M6	12±1.5	Rod end spherical plain bearing/Oil level sensor/Advertising billboard/Carbon canister solenoid valve/Guard bar
GB6187.1M6	8～10	Side Reflector
Non-standard Bolt M6×25	10～12	Instrument Bracket Base / Rear Turn Signal
Non-standard internal hex socket bolt M6	2～3	Clevis Nut / Left Air Intake Chamber of Air Filter
Non-standard internal hex socket bolt M6	3.5～4	Connect plastic parts/plastic parts to bushings
Non-standard internal hex socket bolt M6	6～8	Connect the plastic part to the iron bracket
Non-standard internal hex socket bolt M6	8～10	Foot pedal rubber
Non-standard internal hex socket bolt M6	11～12	Anti-scald plate/Hydraulic control unit bracket
GB70.1 M6 Hexagon Socket Head Cap Screw	9～11	21-inch front mudguard
Inner plum blossom shaft shoulder screw M6	6～8	Connect plastic parts with iron brackets, aluminum parts, etc.
Hexagon small/large flange internal Torx bolt M6	10～12	Rear shock absorber external gas cylinder bracket / Rear brake master cylinder / Guard bar / Rod end joint bearing
Hexagon small/large flange internal Torx bolt M6	12±1.5	Forward front oil outlet pipe bracket / Forward brake hose clamping sleeve / PKE main unit / Brake pedal spline rocker arm / Main water tank / Clutch rocker arm half cover / Rear brake master cylinder mounting bracket / Hydraulic control unit bracket / Fuel tank front mounting bracket / PKE main unit fixing bracket / Rectifier / Main bracket / Intake pipe assembly / Left rear cover / Air make-up valve bracket / Air cleaner upper housing / Thermostat / Engine oil inlet pipe / Engine oil outlet pipe / Oil cooler / Radiator
GB5789 M8	18～28	Front bumper mounting bracket
GB6187.1 M8	25±3	Large sprocket
GB70.1 M8 Hexagon Socket Head Cap Screw	25±3	Direction to install the pressure block/tail box mounting plate
GB70.1 M8 Hexagon Socket Head Cap Screw	20	Front shock absorber bottom tube
Non-standard slotted shoulder bolt with plum blossom slot M8	24±3	Disc brake rotor
Non-standard slotted shoulder bolt with plum blossom slot M8	30±3	Large sprocket
Non-standard slotted pan head bolt with column and plum blossom slot M8	25±3	Headrest bracket / Rear armrest / Rear fender bracket / Rear caliper / Subframe / Handlebar lock / Front footrest bracket / Muffler / Guard bar / Side case bracket

Non-standard slotted pan head bolt with column and plum blossom slot M8	18±3	Muffer Clamp
Non-standard nut M10×1.5	40±5	Shock Absorber Link/Side Stand/Main Frame
Hexagon Flange Socket Bolt M10	60±5	Directional spacer block
GB70.1 M10 Hexagon Socket Head Cap Screw	45±5	Front Caliper Bolt
Hexagon head bolt for disc brake oil pipe M10×1×20	24±1	Disc brake oil pipe
Disc brake oil pipe bolt M10×1－22	32±1.5	Hydraulic Control Unit
Disc brake oil pipe bolt M10×1－22	25±3	Caliper
Hexagon Flange Concave Ball BoltM10	55±5	Rear shock absorber nut
Non-standard slotted pan head bolt with column and plum blossom slot M10	50±5	Hanging Bolt
Non-standard slotted pan head bolt with column and plum blossom slot M10	45±5	Lower guardrail bracket
GB6187.1 M12×1.25	120	Engine Rear Mounting
GB6187.1 M12×1.25	85±5	Rear shock absorber straight connecting rod
GB6187.1M12×1.25	80～85	Main Bracket Shaft Nut
GB5789 Non-standard Bolt M14	150	Pre-hanging of motivation
Disc brake bleed screw M6	9±1.5	J.JUAN Caliper
Disc brake bleed screw M6	12.5±1.5	BRM Caliper
Hexagon socket head cap screw nut M8	25±1.5	Muffer flange
Hexagon Flange Concave Ball Bolt M12	65±5	Rear muffer
Rear Swingarm Shaft Self-Locking Nut（M22×1.5）	105	The left nut of the rear swingarm axle requires the application of threadlocker.
M22×1.0 Protruding Hexagon Lock Nut	130±10	Small sprocket
后平叉轴空心轴 Φ23×298	7±1.5	
Φ42×8－M30×1.5Six-slot Locking Round Nut	65	Right nut of rear swingarm shaft
Oxygen Sensor	18±1.55	
Hexagonal nut for tire pressure sensor	3～5	
Coupling Assembly Bolt	6～8	
Upper connecting plate decorative nut	100±10	
Combination screw for the upper tailpipe of the muffler	45±5	
Rear axle slotted nut (M24×1.5)	130±10	

Note: For those with special requirements, please refer to the corresponding disassembly steps; for the rest, refer to the requirements in the above table.

Cable/cable/pipeline /electrical components distribution diagram

1. Lighting distribution map

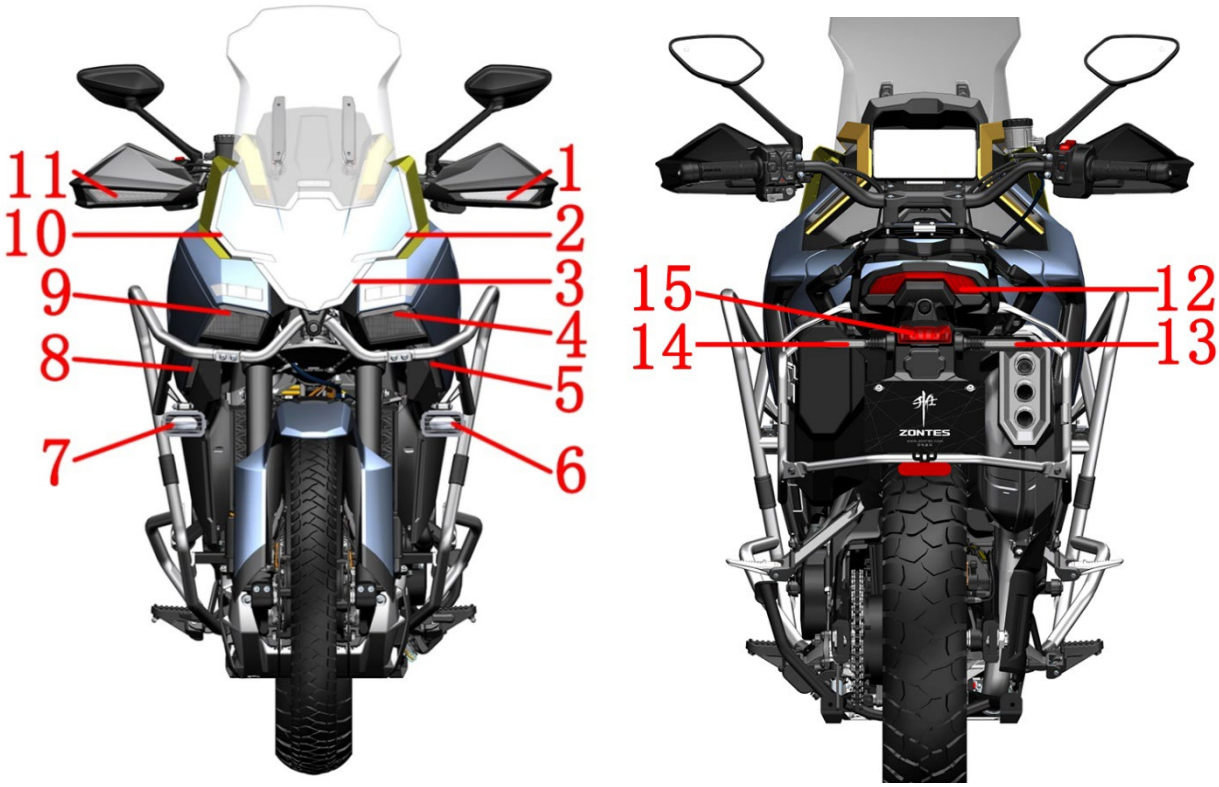

1-Left front turn signal 2-Left position light 3- Center position light 4 -Left headlight 5- Left corner light 6- Left fog light (high-end version) 7- Right fog light (high-end version) 8- Right corner light 9-Right headlight 10- Right position light 11-Right rear turn signal 12- Rear position light 13- Right rear turn signal 14- Left rear turn signal 15- Rear taillight/license plate light

2. Throttle and clutch cable

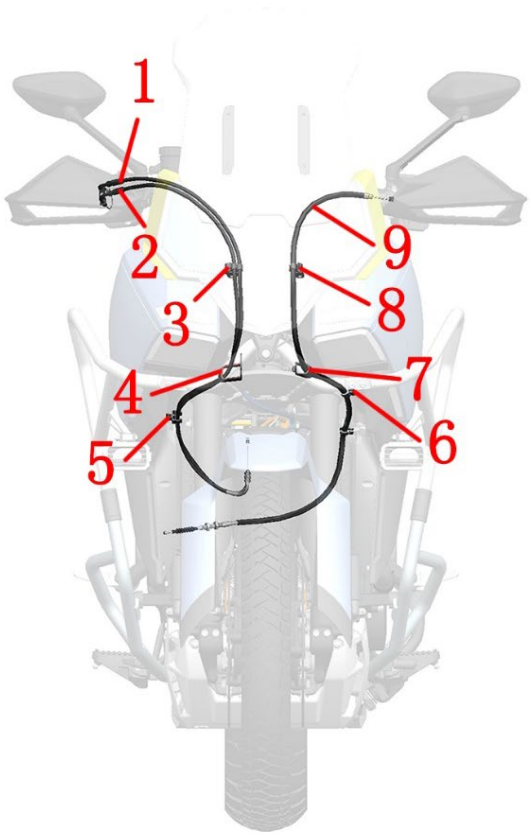

1- Refueling line 2- Oil return line 3-Right handlebar wiring bracket 4- Throttle cable limit bracket 5 - Throttle cable clamp 6 - Clutch cable clamp 7-Clutch cable limit bracket 8-Left handlebar wiring bracket 9-Clutch cable

3. Brake master cylinder and brake oil pipe

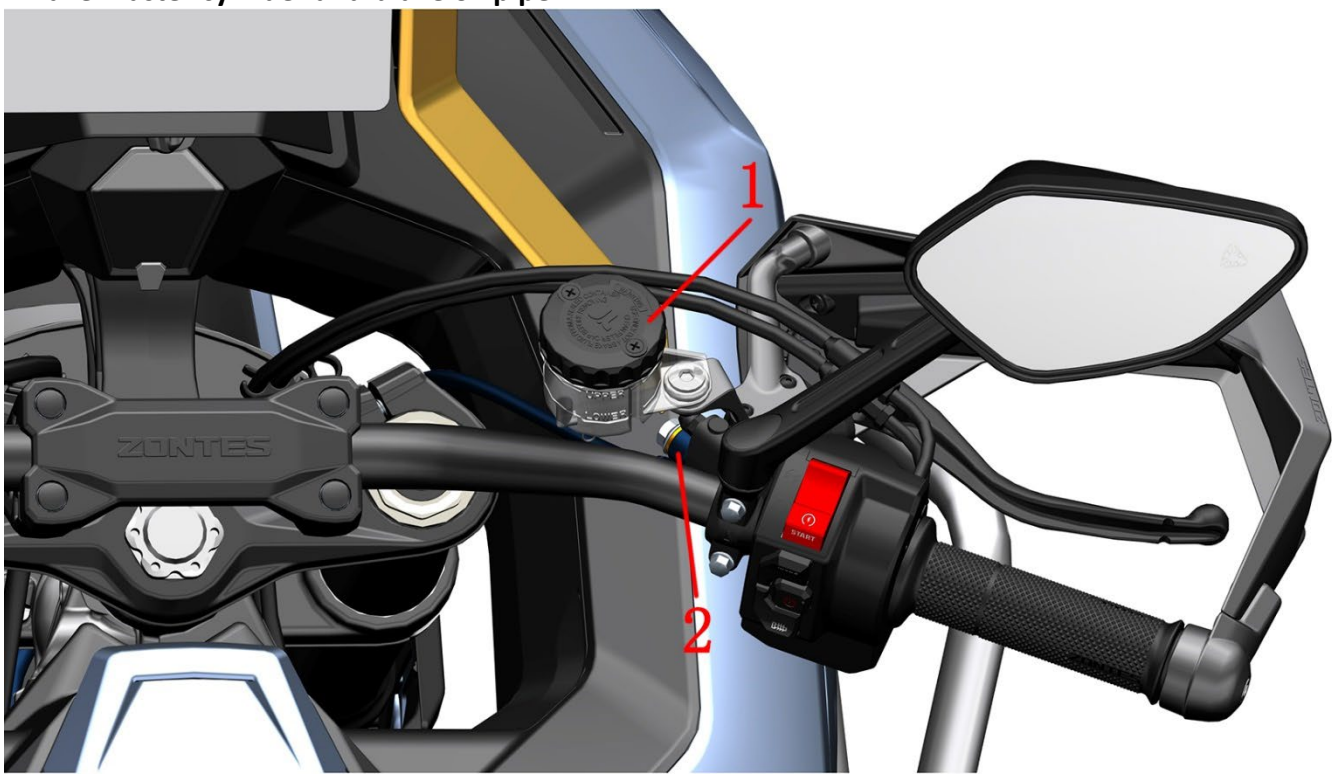

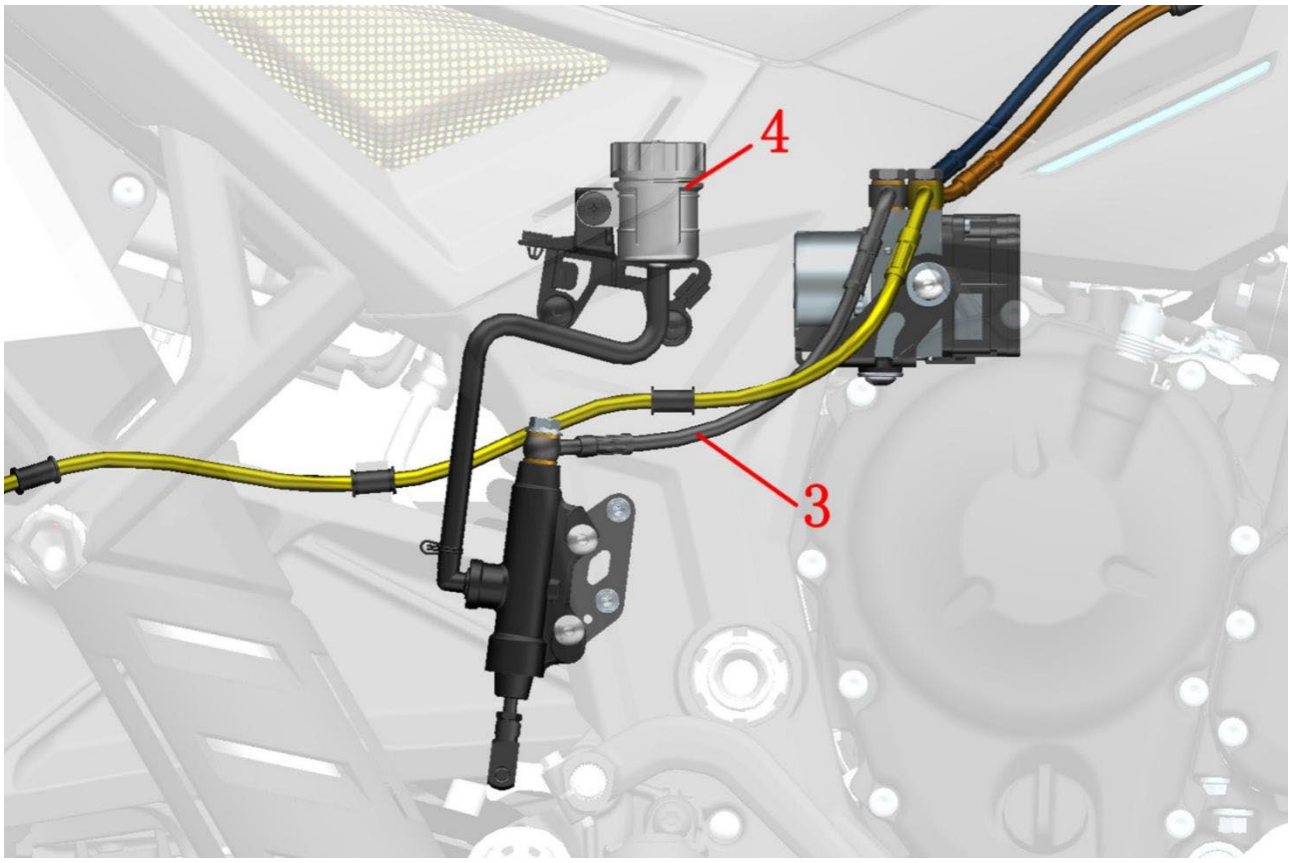

1-Front disc brake master cylinder 2-FMC-HU brake hose 3-RMC-HU brake hose 4-Rear disc brake master cylinder

4. Calipers, brake hoses and wheel speed sensors

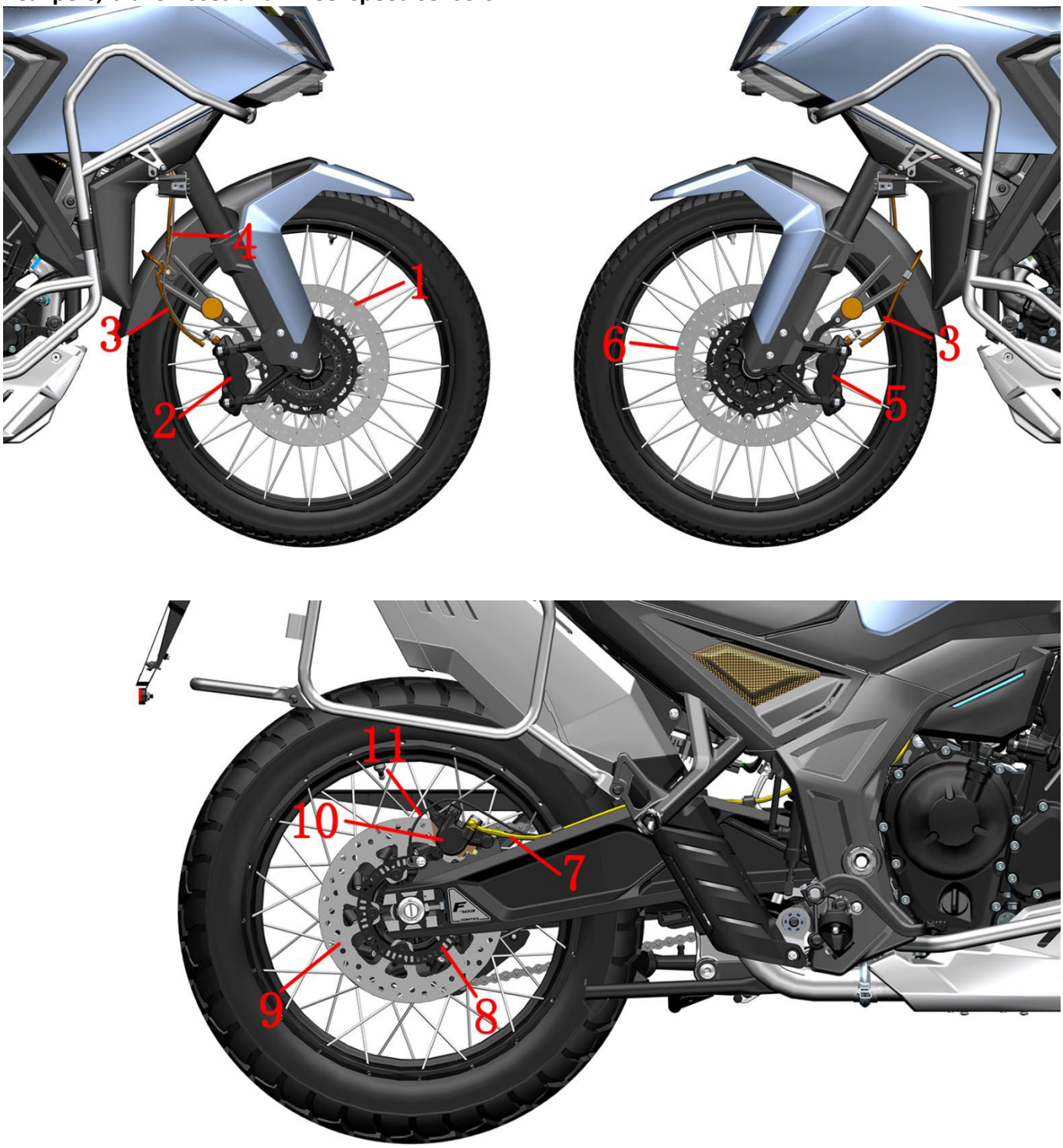

1- Brake disc assembly (front right) 2-Disc brake caliper (front right) 3-FC-HU brake hose 4-Wheel speed sensor (front wheel) 5-Disc brake caliper (front left) 6-Brake disc assembly (front left) 7-RC-HU brake hose 8 - Rear wheel A BS induction coil 9 -Brake disc (rear) 10-Rear disc brake caliper 11-Wheel speed sensor (rear wheel)

5. Braking system parts distribution diagram

5.1 J.JUAN braking system

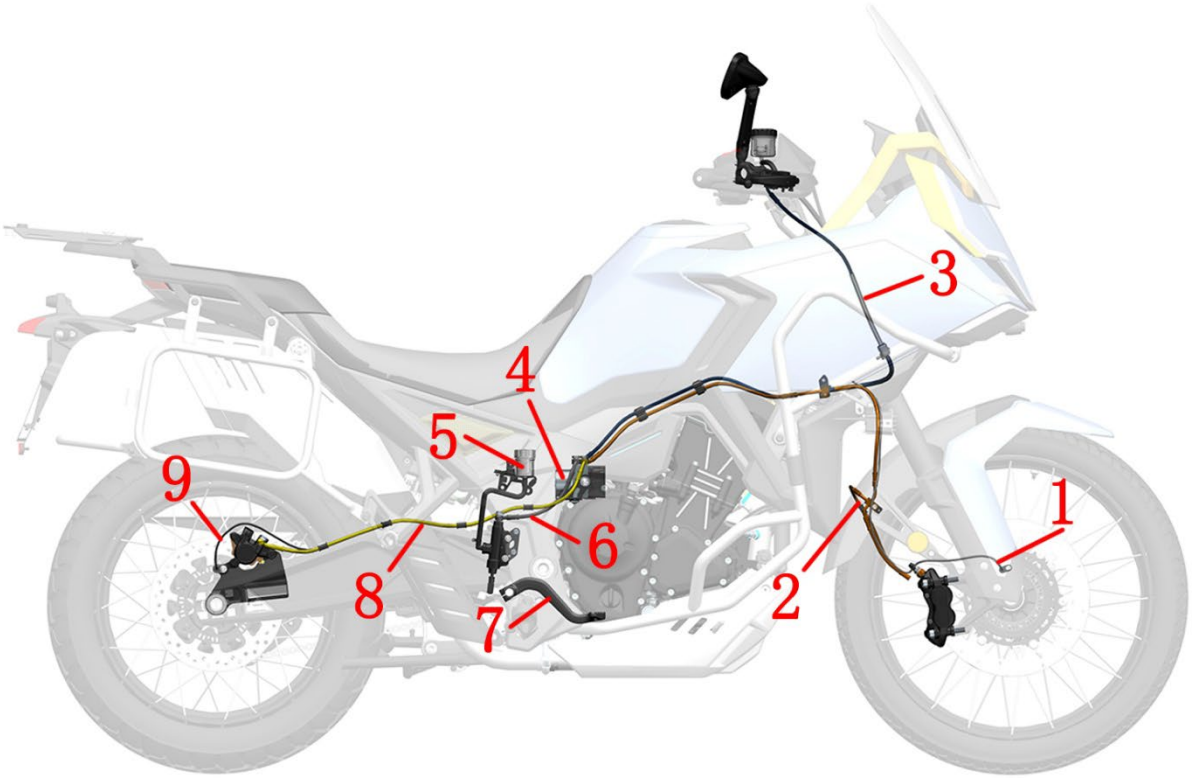

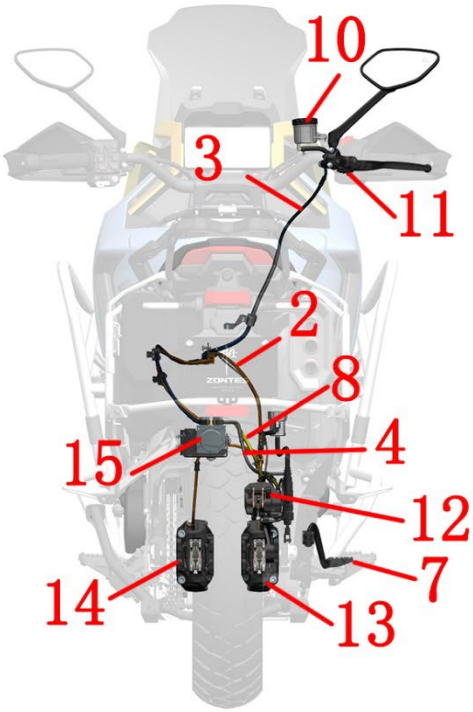

1- Wheel speed sensor (front wheel) 2- FC-HU brake hose 3- FMC-HU brake hose 4- RMC-HU brake hose 5- Rear disc brake master cylinder 6- Rear brake switch 7- Brake pedal 8- RC -HU brake hose 9- Wheel speed sensor (rear wheel) 10- Front disc brake master cylinder 11- Front brake switch 12- Rear disc brake assembly 13- Front disc brake assembly (right) 14- Front disc brake assembly (left) 15- Hydraulic control unit

5.2 Brembo braking system

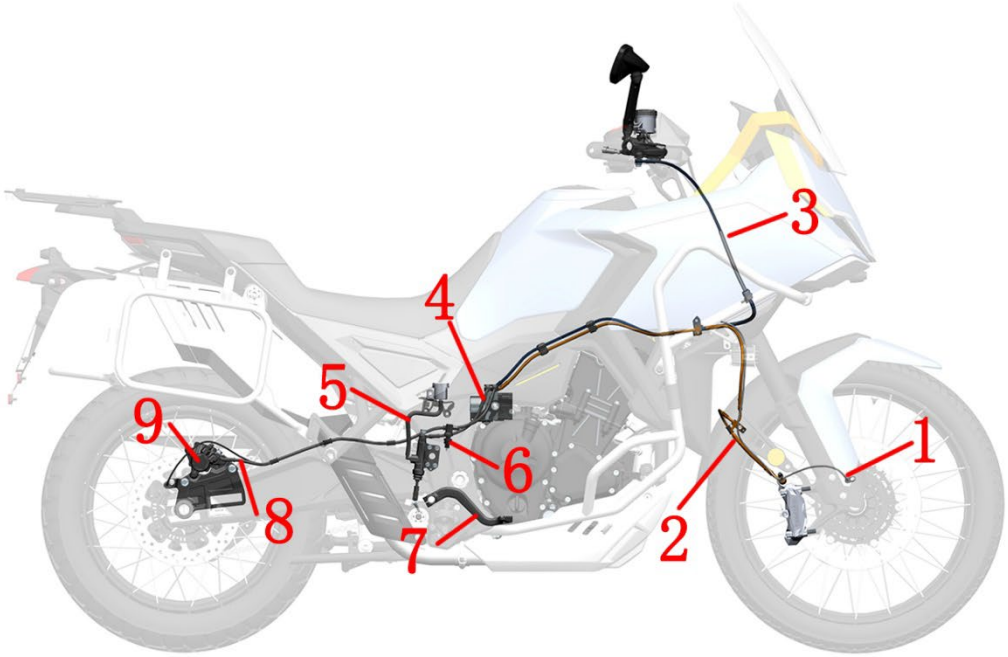

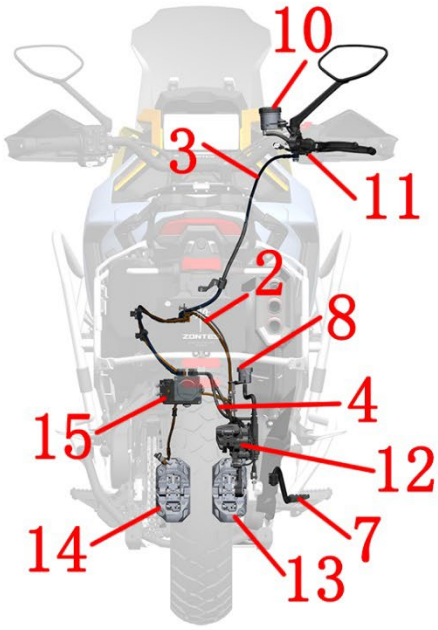

1- Wheel speed sensor (front wheel) 2- FC-HU brake hose 3- FMC-HU brake hose 4- RMC-HU brake hose 5- Rear disc brake master cylinder 6- Rear brake switch 7- Brake pedal 8- RC -HU brake hose 9- Wheel speed sensor (rear wheel) 10- Front disc brake master cylinder 11- Front brake switch 12- Rear disc brake assembly 13- Front disc brake assembly (right) 14- Front disc brake assembly (left) 15- Hydraulic control unit

6. Fuel supply system

6.1 Fuel evaporation

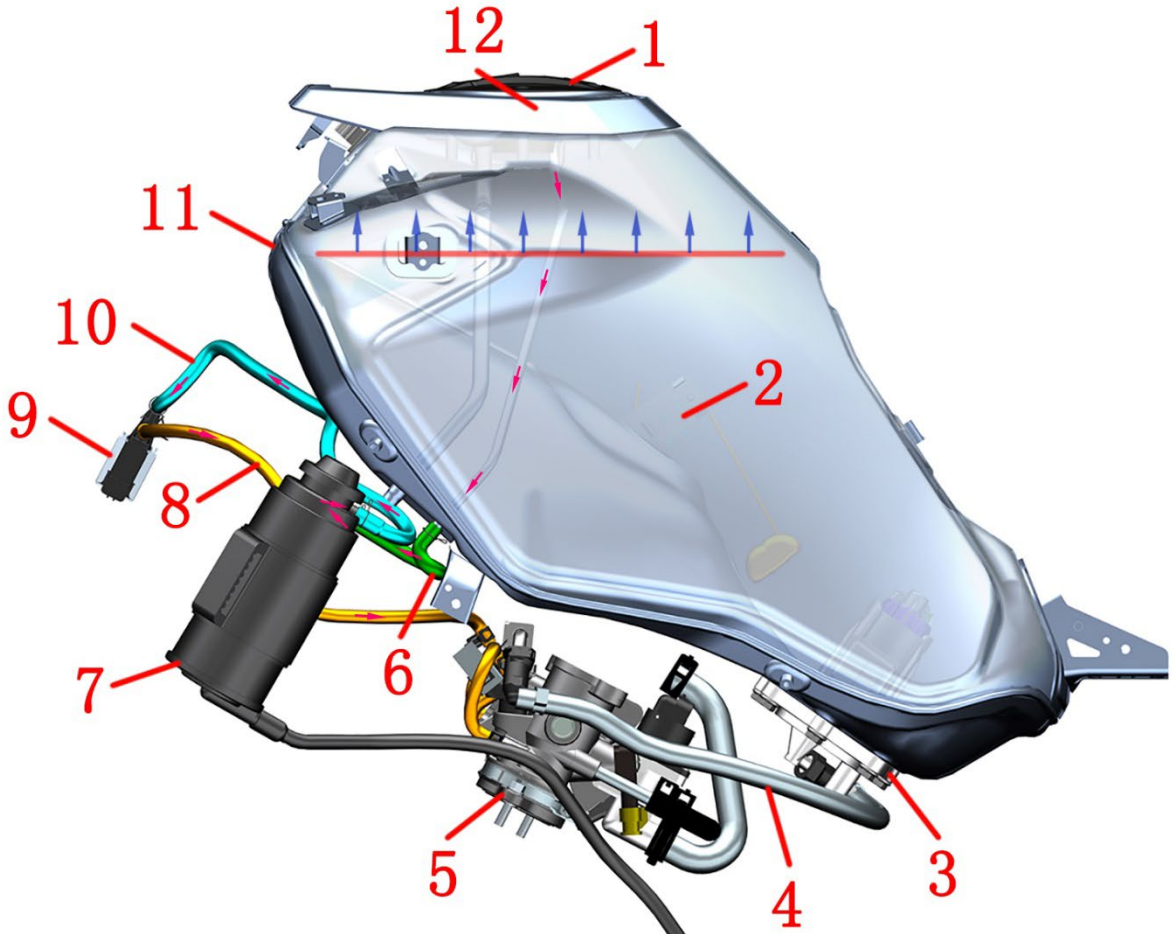

1-Electronic fuel tank lock 2-Fuel level sensor 3-Fuel pump 4- High pressure fuel pipe 5-Throttle body 6- Adsorption /vent pipe 7-Carbon canister 8-Solenoid valve outlet pipe 9-Carbon canister solenoid valve 10-Solenoid valve inlet pipe 11-Fuel tank 12-Oil-gas separator (inside the fuel tank lock)

Fuel evaporation:
Fuel and gas → Fuel and gas separator (inside the fuel tank lock) → Adsorption /vent pipe → Solenoid valve inlet pipe → Solenoid valve outlet pipe → Throttle valve body assembly → Intake manifold → Cylinder

6.2 Fuel supply

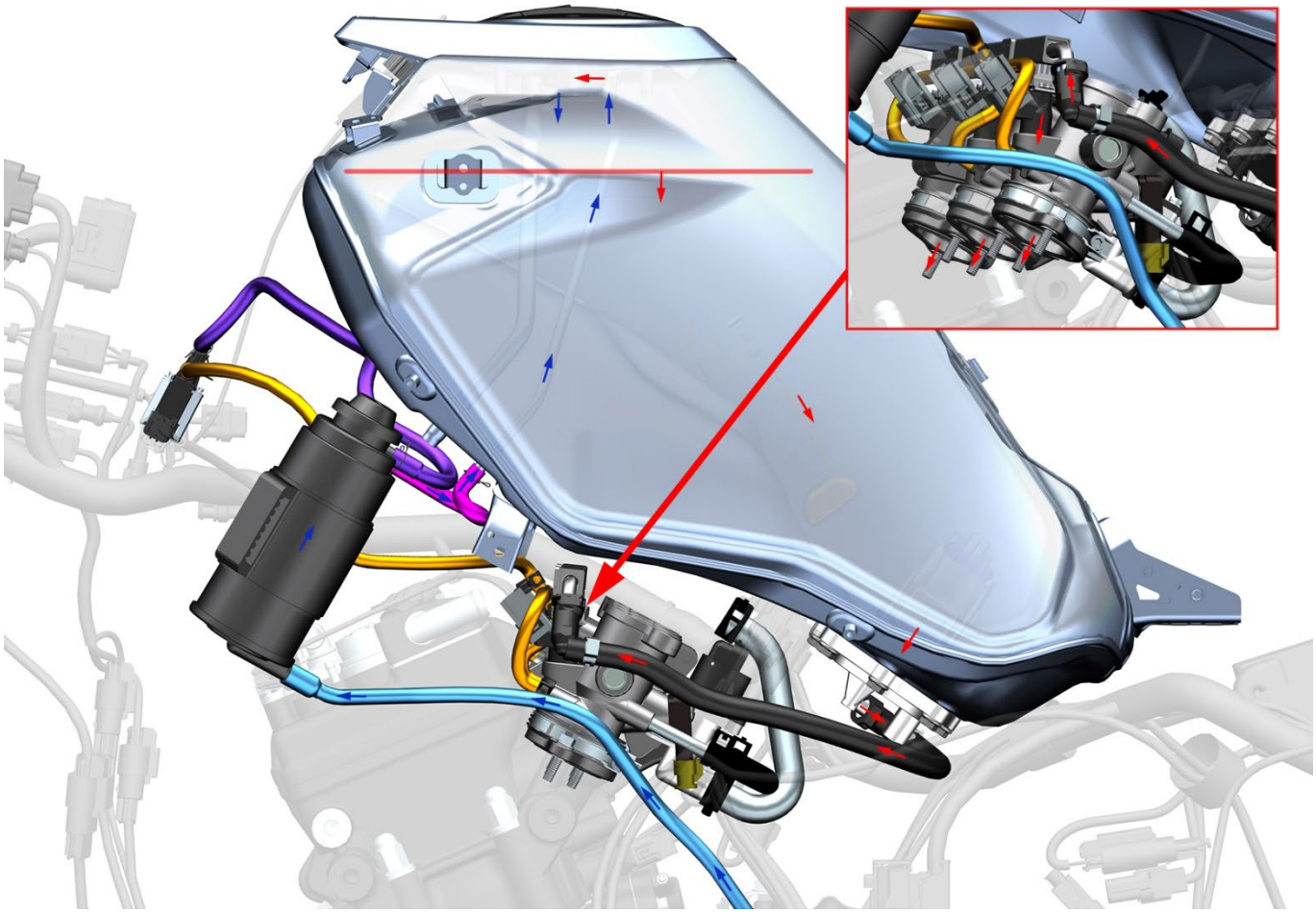

Fuel Supply System:
Air → canister→ adsorption/ventilation pipe→ air-air separator (inside the tank lock)
Fuel → fuel pump filter→ fuel pump→ high-pressure tubing→ injector → cylinder

7. Distribution of cooling system components

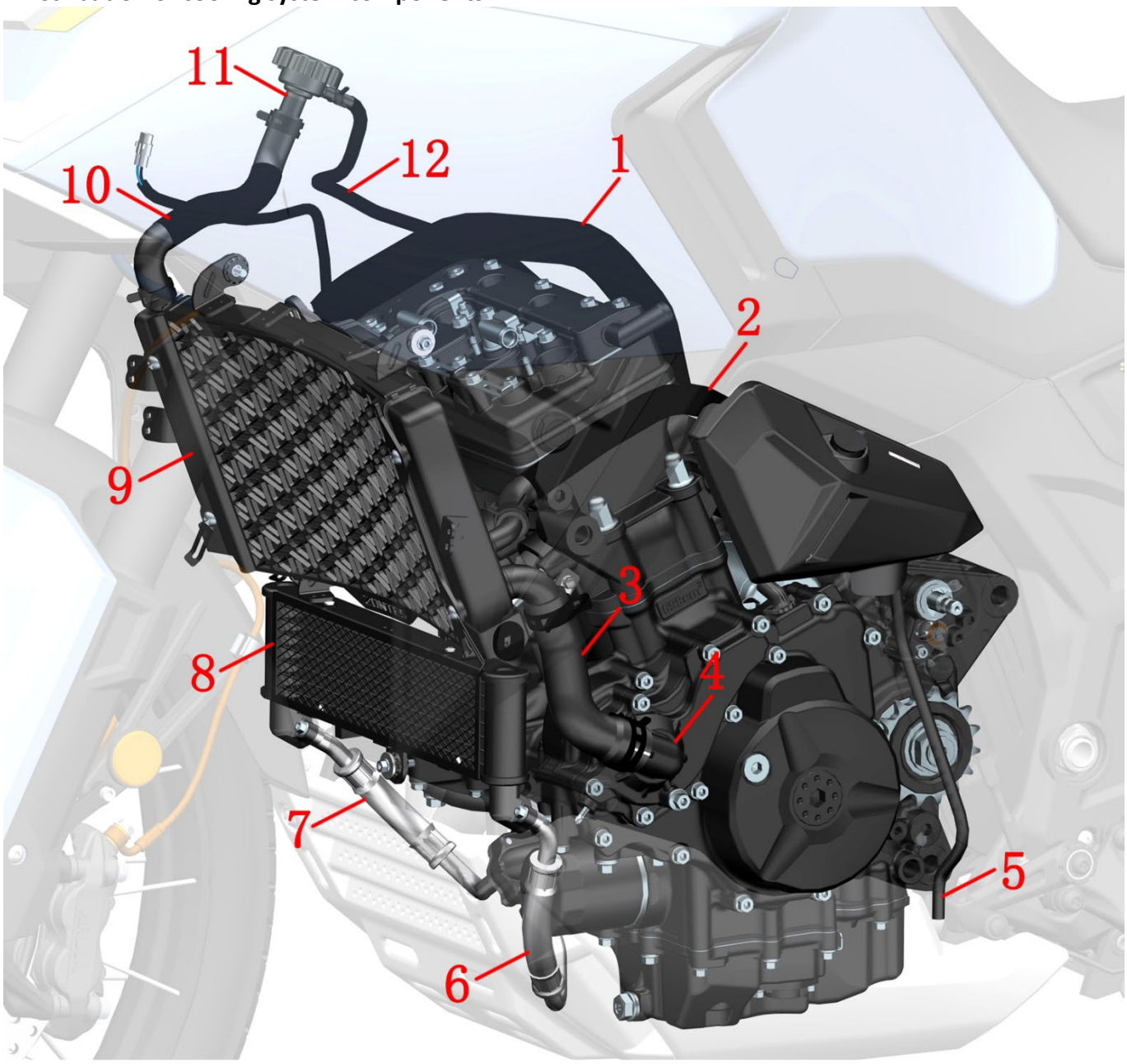

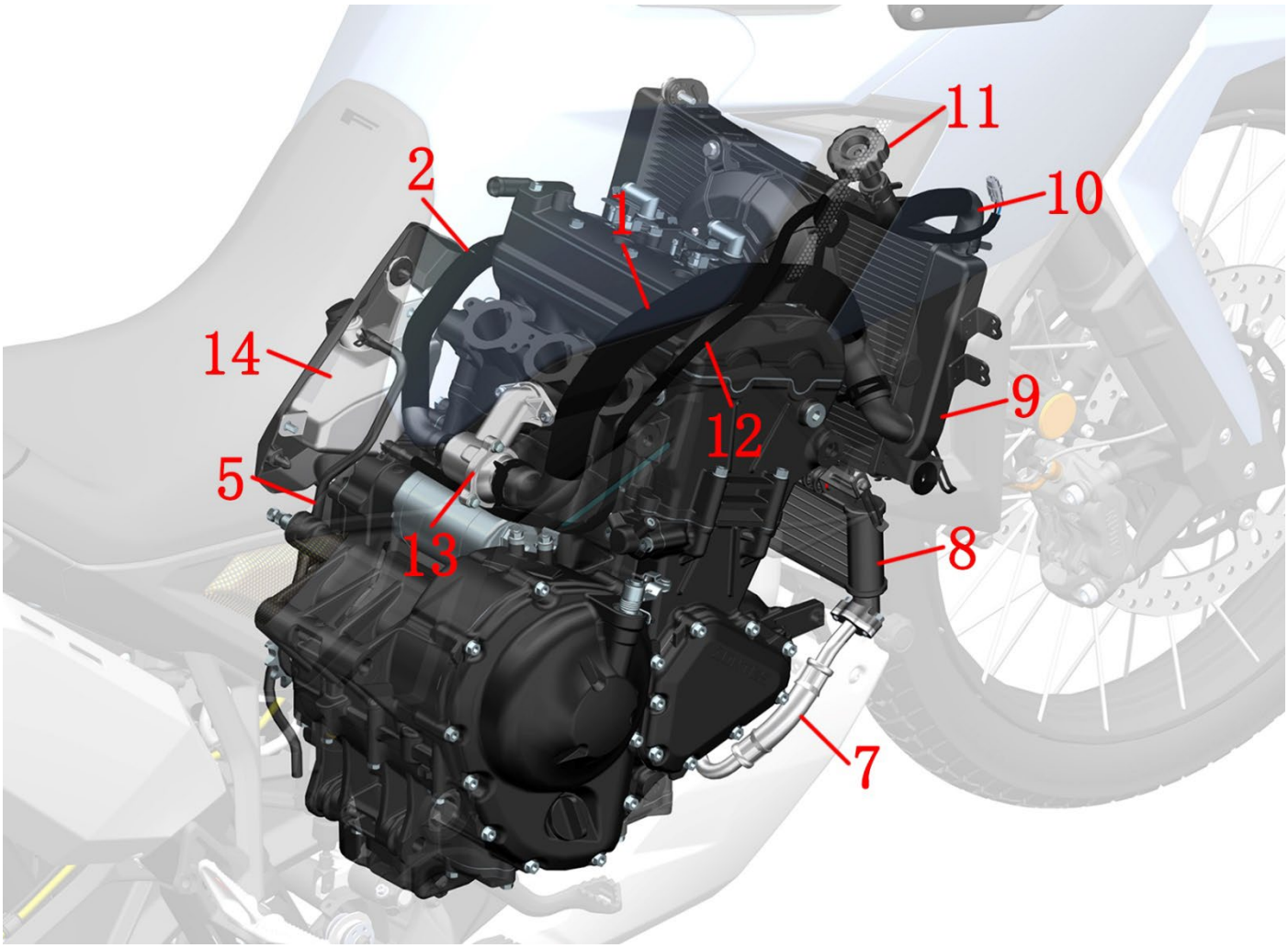

1-ZT703-F Main Water Tank Inlet Pipe 2-ZT703-F Small Circulation Water Pipe 3-ZT703-F Engine Water Inlet Pipe 4-Water Pump Cover Assembly 5-ZT310-R Auxiliary Water Tank Leaking Pipe 6-ZT703-F Engine Oil Outlet Pipe 7-ZT703-F Engine Oil Inlet Pipe 8-ZT703-F Oil Cooler 9-ZT703-F Main Water Tank 10-ZT703-F Water Tank Water Filling Port Connecting Water Pipe 11-ZT703-F Water Tank Water Filling Port 12- ZT703-F auxiliary water tank connected to water pipe 13-ZT703 thermostat 14-ZT703-F auxiliary water tank

8. Electrical device layout diagram

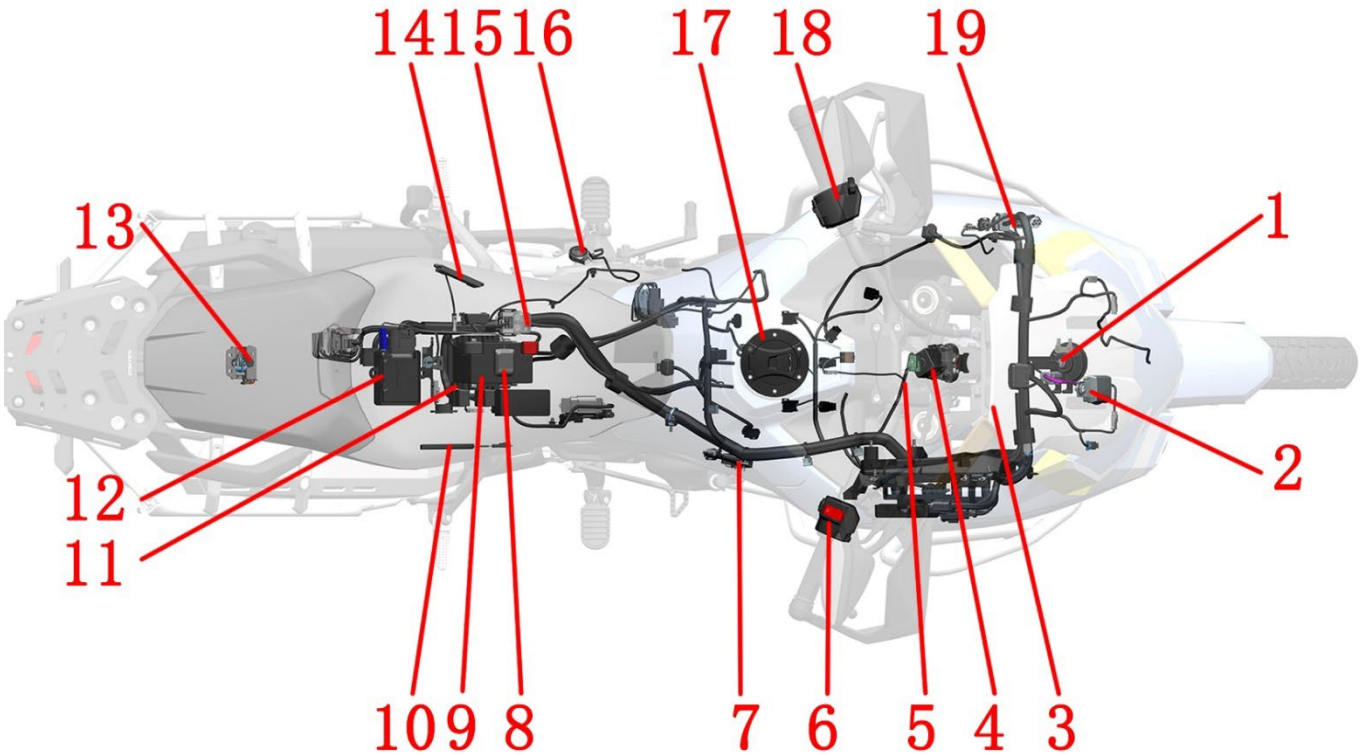

1-Horn 2-Windshield motor controller 3-TFT meter, 4-Faucet lock, 5-Canister solenoid valve, 6-Right hand handle switch, 7-Charging port base, 8-GPS antenna, 9-Lithium battery, 10- PKE antenna, 11-Rectifier, 12-PKE host, 13-Cushion lock, 14-Non-electric induction antenna, 15-Starting relay, 16-Side bracket flame-out switch, 17-Fuel tank lock, 18-Left handle switch, 19-Main cable

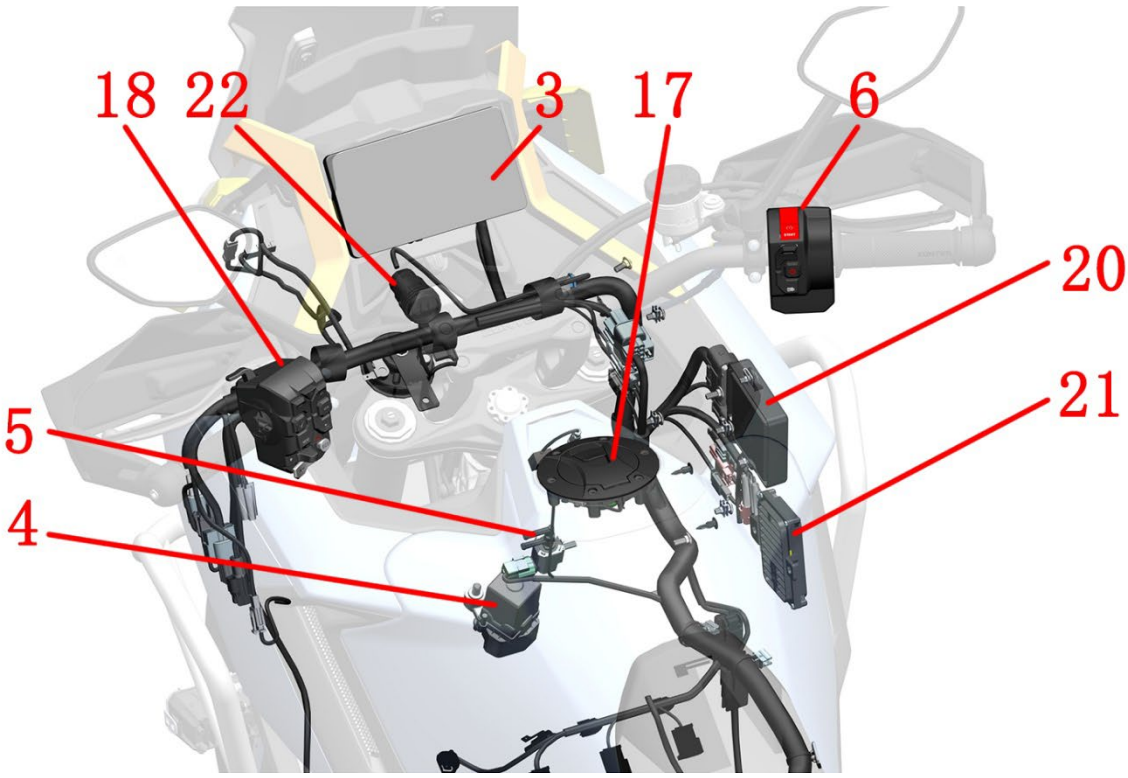

20-LCM Lighting Controller 21-Fog Lamp Controller 22-USB charging cable

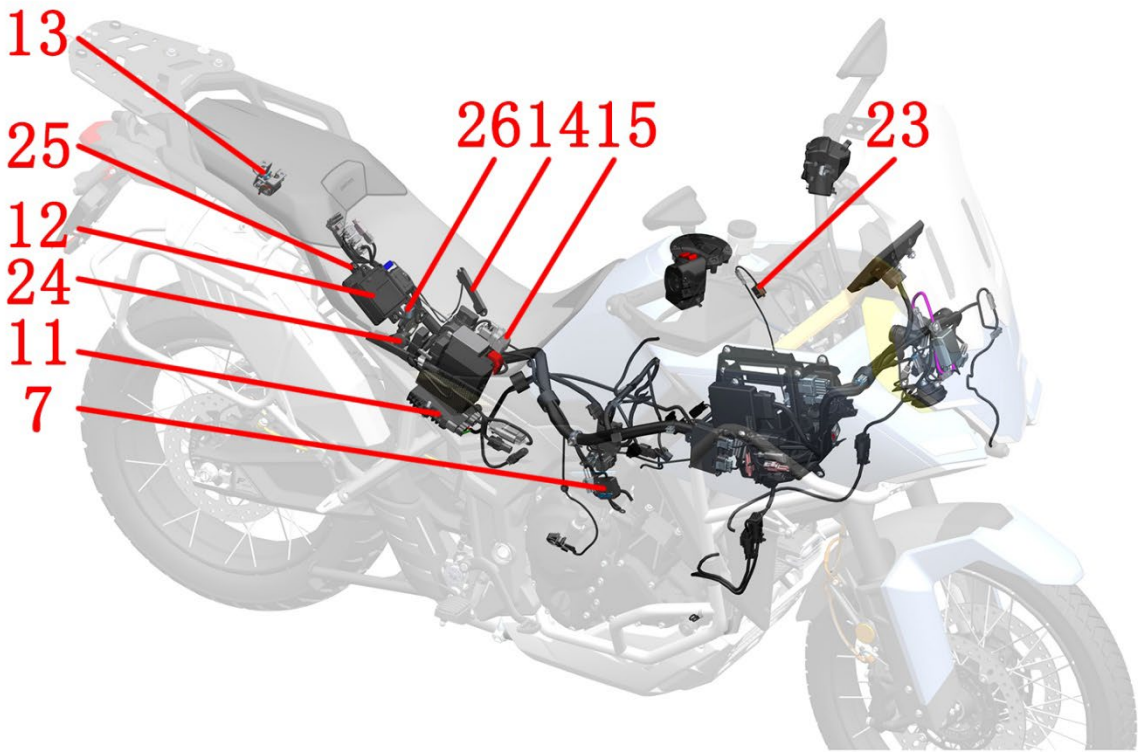

23 - Fuel tank lock protects the substrate 24 - Buzzer 25 - Engine controller (ECU) 26 - Dump switch

9. Intake and exhaust systems

9.1 Intake system

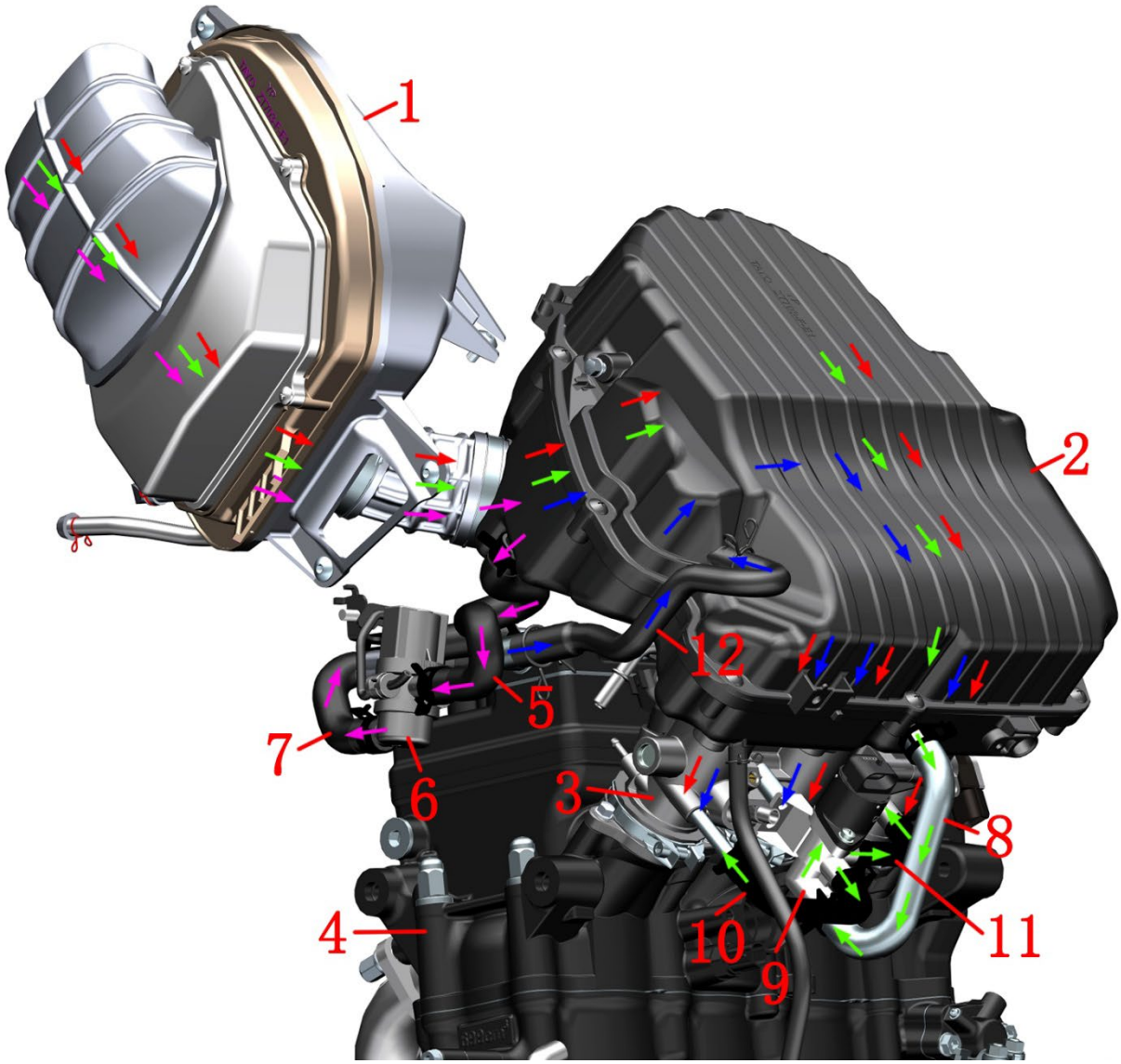

1-Left intake chamber assembly 2-Air filter assembly 3-Throttle valve body assembly 4-Cylinder head 5-Make-up valve rubber hose-4 6-Make-up valve 7-Make-up valve rubber hose-3 8-Stepper motor rubber hose-2 9-Throttle make-up valve 10-Stepper motor rubber hose-1 11-Stepper motor rubber hose-3 12-Exhaust gas snorkel

Air Intake System:
Main air flow direction of the air intake system (red arrow)
Left side intake chamber assembly→ air filter assembly→ throttle body assembly→ cylinder head

Secondary make-up valve gas flow direction (pink arrow)
Left intake chamber assembly→ air filter assembly→ make-up valve rubber hose-4→ make-up valve→ make-up valve rubber hose-3→ cylinder head

Throttle make-up valve gas flow direction (green arrow)
Left side intake chamber assembly→ air filter assembly→ stepper motor rubber tubing - 2→ throttle valve→ stepper motor rubber tubing - 1→ stepper motor rubber tubing - 3→ cylinder head

Air filter exhaust gas recirculation gas flow direction (blue arrow)
cylinder head→ exhaust gas snorkel→ air filter assembly→ throttle body assembly→ cylinder head

9.2 Exhaust system

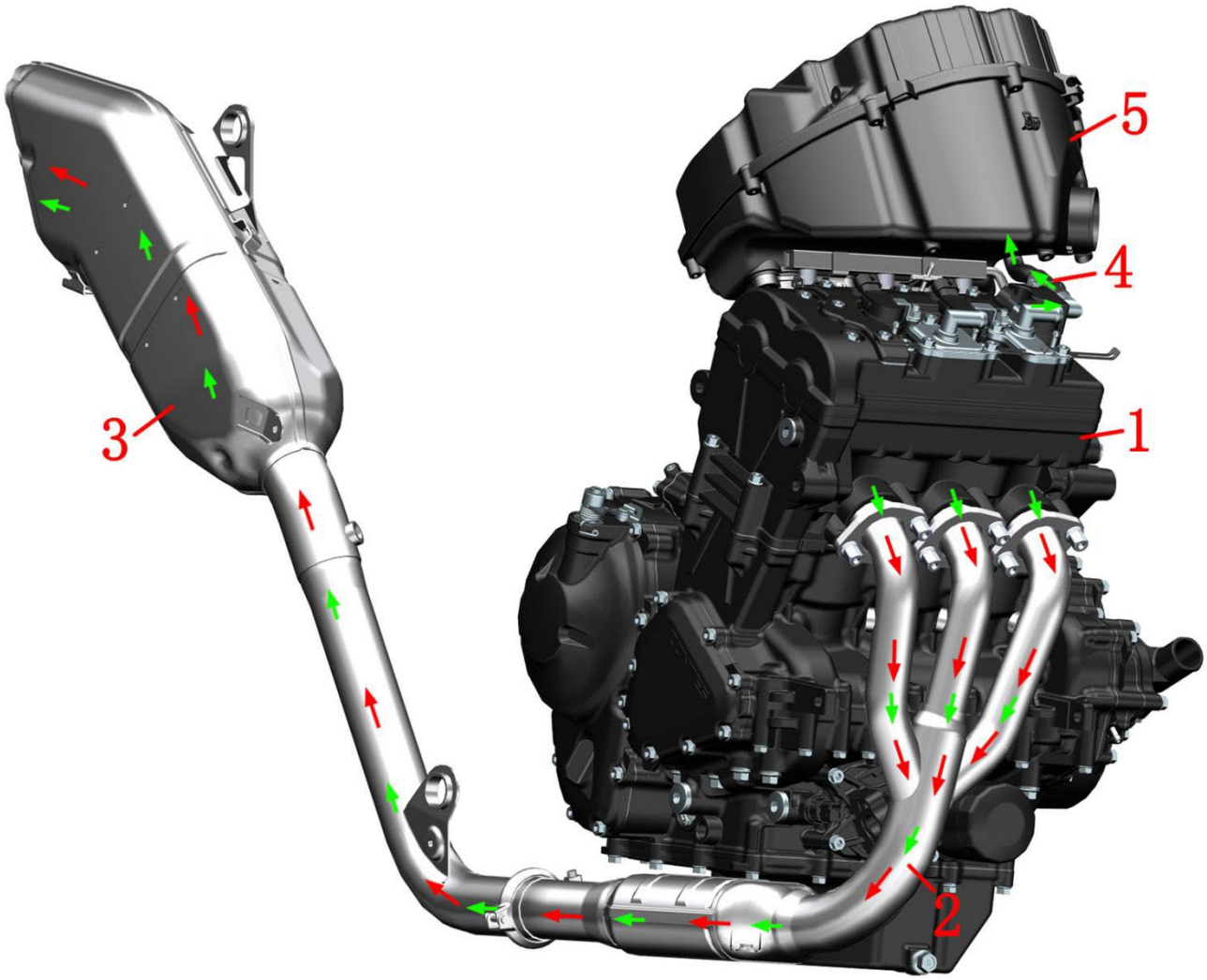

1-cylinder head 2-front muffler 3-rear muffler 4-exhaust gas snorkel 5-air filter assembly
Exhaust system:
The main exhaust gas emission flow direction
The cylinder head → a front muffler → a rear muffler

Secondary cycle exhaust emission process
Cylinder heads→ exhaust gas snorkels→ air filter assemblies→ cylinder heads→ front mufflers→ rear mufflers

Tools

125-piece tool set	**Torque wrench**	**On-board tools**	**Claw hammer**
Pull code	Rubber hammer	Dynamic balancing machine	Tire scraper
Oil pan	Measuring cup	Funnel	Taps, dies
micrometer	Depth gauge	Vernier calipers	Feeler gauge
Tire pressure gauge	Magnetic mount + dial gauge	PT300 Electrojet Brush Writing Diagnostic Instrument (16PIN)	17# hexagon

Hoop pliers	Inner circlip pliers	Circlip pliers	Clamp-on multimeter
Multimeter	Blow guns	14-side 65mm cap filter wrench (for M350 fine filter replacement)	T45/50 Torx socket with holes
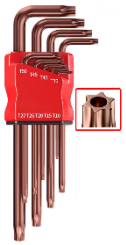			
T25/45/50 Torx wrench with holes			
Some of the above pictures are from the Internet, and the copyright belongs to the original author. Do not use for any other purpose			

Expansion Nail Description

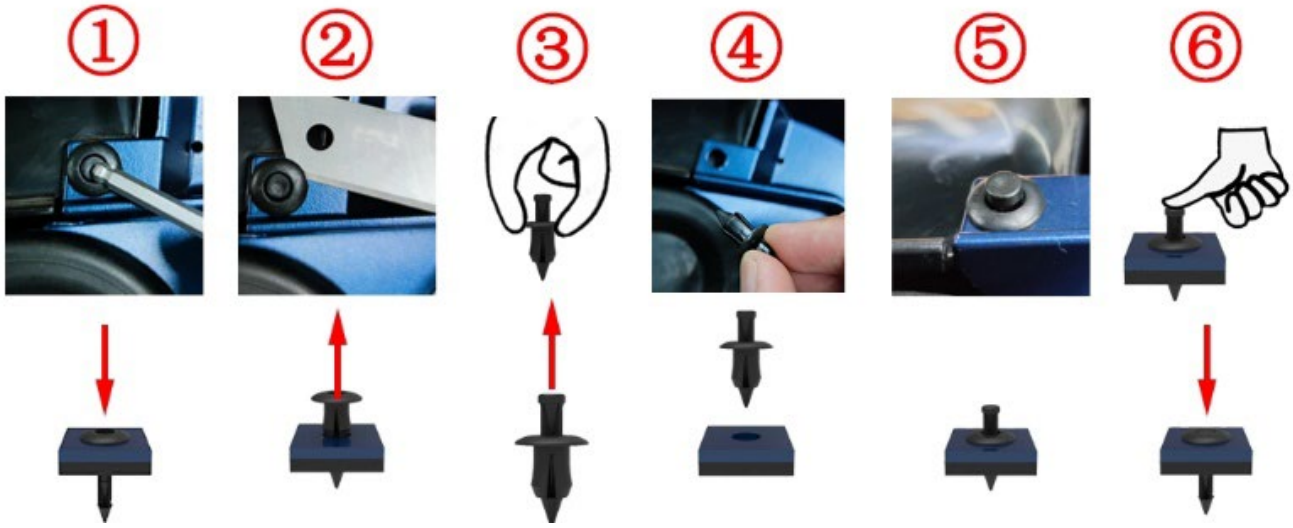

(1) Press the center cylinder with 4# hexagon or other tools, you can hear a sound or the center cylinder moves axially by 2mm;
(2) Use a blade, nail or carving knife to pry open the gap and remove it; If space allows, reach out to the back and push it out;
(3) Pinch the outer ring with two fingers and push the center cylinder up to the initial position;
(4) Pinch the center cylinder with two fingers to install the expansion nail to the installation position;
(5) The outer ring is attached to the connected parts; If it does not fit, it needs to be checked for misalignment;
(6) Press the center cylinder with your fingers or other tools, you can hear a sound or the top of the center cylinder is basically level with the top surface of the outer ring, indicating that the assembly is in place.

2. Maintenance

Pre-Service Notice

1. It is necessary to use good quality tools, or special tools and fixtures designed by our company. Using inferior tools may result in damaged parts, detached plating, inadequate assembly, etc.

2. The O-rings, paper gaskets, copper gaskets, and component sealing rings used for sealing must be replaced before assembly.

3. Fasteners with torque requirements need to use a torque wrench to check the torque; Refer to the general-purpose torque value recommended for general-purpose fasteners where torque is not required.

4. It needs to be cleaned before assembly; After assembly, it is necessary to check whether the assembly is correct and in place.

5. The vehicle should be parked and balanced, and safety should be paid attention to during disassembly and assembly. This includes, but is not limited to, the use of power tools, hand tools, pneumatic tools, hydraulic tools, handling. Protect against contact with skin, eyes, burns, electric shock, etc.

6. All kinds of oil, liquid, batteries, etc. that have been replaced need to be recycled and handed over to qualified institutions for disposal; It is forbidden to dump polluting the environment or water sources at will.

7. Swallowing or inhaling coolant and brake fluid will cause certain harm to the human body. Wash any exposed skin such as hands and face immediately and thoroughly after each addition. If swallowed, contact a poison control center or hospital immediately; If inhaled, immediately move into a ventilated environment. If it accidentally gets into your eyes, you should immediately rinse your eyes with plenty of running water and seek medical attention in time. Always keep out of reach of children and pets.

8. If you need to clean or wash the body parts of the vehicle, you should use neutral washing liquid or tap water or diesel, kerosene, etc. Acidic or alkaline wash liquid will cause irreversible corrosion on the surface of parts, such as paint, electroplating surface, anodized surface, etc.; Gasoline can cause premature aging or hardening of sealants, gaskets, rubber parts, etc., reducing the service life. Non-woven fabrics that do not leave residue should be used for wiping, as ordinary rags may affect the assembly or cause other adverse effects such as cloth shavings or wool.

9. The following are the instructions for disassembling and assembling expansion nails.

10. If there is a “ 📖 “ symbol on the right side of the step, you can click to quickly jump to the corresponding step.

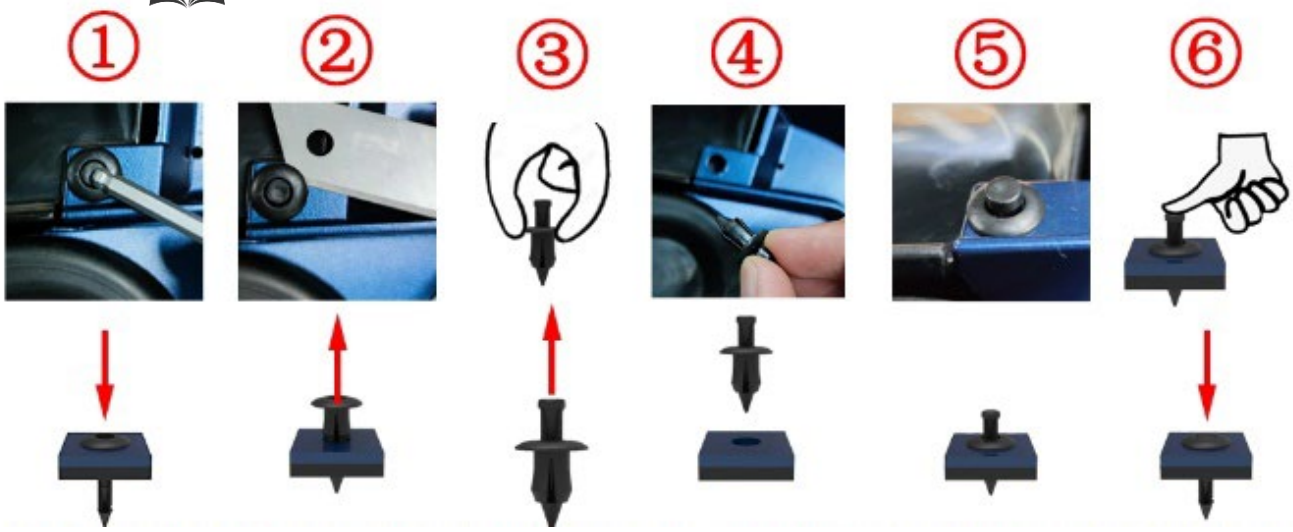

①Press the center cylinder with 4# hexagon or other tools, you can hear a sound or the center cylinder moves axially by 2mm (0.079 in);

②Use a blade, nail or carving knife to pry open the gap and remove it; If space allows, reach out to the back and push it out;

③Pinch the outer ring with two fingers and push the center cylinder up to the initial position;

④Pinch the center cylinder with two fingers to install the expansion nail to the installation position;

⑤The outer ring is attached to the connected parts; If it does not fit, it needs to be checked for misalignment;

⑥Press the center cylinder with your fingers or other tools, you can hear a sound or the top of the center cylinder is basically level with the top surface of the outer ring, indicating that the assembly is in place.

Only some of the basic requirements for the prevention of accidental injuries can be enumerated; It is not possible to exhaustively list all scenarios. Be vigilant during disassembly and assembly to prevent accidents.

Maintenance of periodic tables

I: Check (clean, lubricate, adjust or replace if necessary) R: Replace T: Fastening ★: Annotation

Item		Pre-ride check	Frequency*1						Annual Check	Regular replacement
			X1000km	1	5	10	15	20		
			X1000mi	0.6	3	6	9	12		
Expansion tank Antifreeze(Coolant)		I		I	I	I	I	I		Replace every 3 years or 30000 kilometers
Brake pad wear		I			I	I	I	I	I	Check for wear and tear
Rear fork wear-resistance block		I			I	I	I	I		30000 kilometers replacement ★Note 1
Fuel level		I								
Engine oil	☆	I		R	R	R	R	R	I	
Oil filter	☆			R		R		R	I	
Air filter (filter element)	☆☆				I	R	I	R		
Tire	☆	I			I	I	I	I	I	Check tire pressure and tread wear
Brake fluid level	☆	I			I	I	I	I	I	Replace every 2 years
Drive chain	☆	I			I				I	★ Note 1
Wheel spoke	☆☆	I		I	I	I	I	I	I	Check for looseness or detachment
Front shock absorber	☆☆	I				I		R	I	★Note 2 Replacing the oil seal, dust seal, and shock absorber oil
Rear shock absorber	☆☆	I				I		I	I	Check for leaks
Brake system	☆☆	I				I		I	I	Check the oil level in the cup
Brake hose				I	I	I	I			
Air filter oil pipe				I	I	I	I	I		
Electronic seat cushion lock, Electronic fuel tank lock										Clean and lubricate every 4000 kilometers
Idle speed						I		I		Start check
Fuel line					I					Check for leaks
Muffler	☆				I	I	I	I	I	★Note3 Figure 1
Clutch lever free play	☆						I	I	I	Follow the operation video
Gap of throttle cable（2024 version）	☆				I	I		I		Gap distance: 2.0~4.0mm
Internal mechanism of faucet lock	☆					I		I		★Note4
Bolts and nuts in steering mechanisms	☆☆			T	T	T	T	T	I	Figure 2
Steering bearings	☆☆						I			15000 kilometers to replenish butter
Vehicle fasteners, bolts、 nuts	☆☆			T	T	T	T	T		Figure 2
The axle sleeve and oil seal of the wheel and sprocket seat	☆☆				I	I	I	I	I	★ Note5
Brake hose	☆☆					I		I	I	Check for leaks
Spark plug	☆☆					I		R		
Windshield components	☆☆				I					★Note6
Rear fork needle roller bearing	☆☆						I			15000 kilometers to replenish butter
Multi-link suspension needle roller bearing	☆☆						I			15000 kilometers to replenish butter
Valve clearance				Check and adjust every 40000 kilometers						★Note7

☆This service is provided by a dealer or a qualified maintenance unit, and can be implemented by the owner if he or she has the right tools, service information and a certain understanding of the machinery.

☆☆For safety reasons, this service should be provided by a dealer or qualified repair unit.
★Note 1: Clean and lubricate the chain every 500~1000 kilometers, and check the wear of the anti wear block on the upper and lower parts of the fork.
★Note 2: Maintain the shock absorber every 20000 kilometers (12000 miles) by replacing the oil seal, dust seal, and shock absorber oil. Single front shock-absorbing assembly total shock-absorbing oil consumption is 440ml. It is recommended that all the shock absorbing oil be completely discharged out of the measuring cup and finally poured into total damping oil at a time. It is recommended to use 7.5W hydraulic oil.
★Note 3: If the motorcycle is hit or scratched by external force while reversing, the appearance, installation point firmness, and whether the muffler buffer rubber is deformed should be carefully checked first, and whether there is any air leakage after the engine idles. Internal abnormal noise or severe appearance damage usually require replacement, and the suspension ears, brackets, buffer rubber, bolts, and damaged parts involved must be replaced before continuing to ride.
★Note 4: For inspection, cleaning, lubrication, and maintenance operations every 10000 kilometers (6000 miles), please refer to the official website's "Dragon Head Lock Maintenance Video".
★Note 5: Check the wear of the oil seal lip and add lubricating grease if necessary.
★Note 6: Check the windshield lift function every 5000 kilometers (3000 miles); Check if the windshield branch is stuck/dry grinding and has abnormal noise; Check if there is too much dust and debris on the guide rail, clean it in a timely manner, and add specialized lubricating grease.
★Note 7: Valve clearance (engine cooling state) inlet: 0.1~0.22mm, exhaust: 0.2~ 0.33mm.
Check the front disc brake caliper bolts, front shock absorber bottom barrel bolts, upper and lower plate bolts, disc brake disc bolts, sprocket nuts, chain adjuster nuts, front pedal bolts, shift lever bolts, rear axle nuts, side bracket kill switch bolts, rear flat fork axle nuts, upper plate decorative nuts, and multi-link nuts for looseness. Check whether the rear axle cotter pin is abnormal.

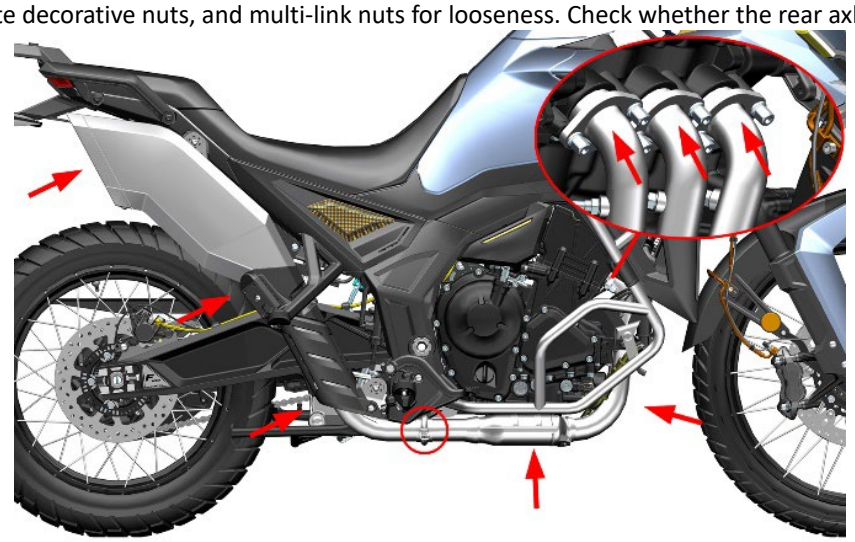

Figure 1

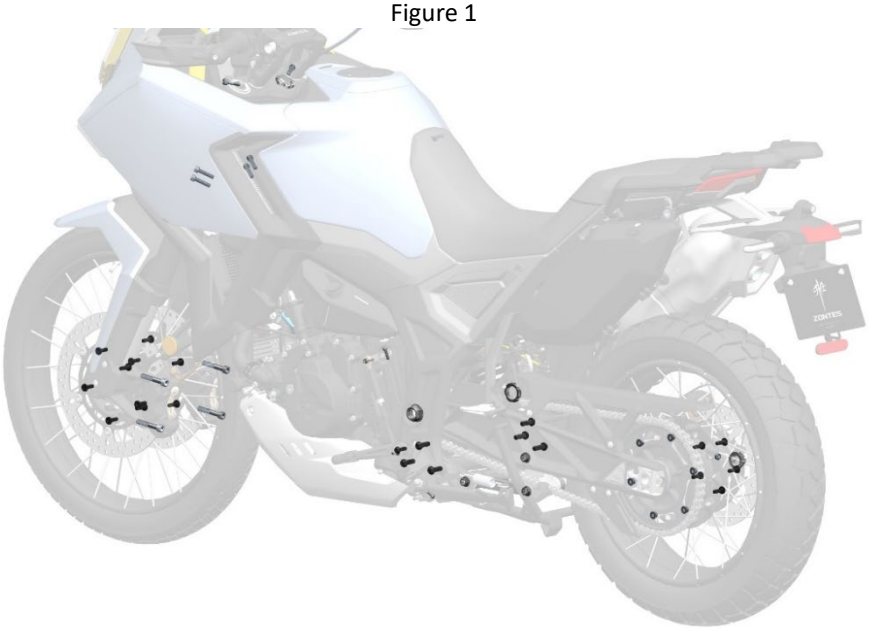

Figure 2

List of daily vehicle operation inspection items

NO.	Check the items	Check the contents
1	Neutral light	Lights up when neutral
2	Turn signals	The switch is normal and the flashing is normal
3	horn	The switch is normal, the volume is normal, and the sound quality is good
4	Brake lights	Lights up normally when braking
5	Headlamps	The switch is normal and the light is normal
6	Steering mechanism	Flexible steering, no overtight, too loose, no interference
7	Rearview mirrors	Clear vision without loosening
8	Braking system	The free stroke is normal, the braking effect is good, and the hydraulic system is leak-free
9	Transmission chains	Tightness is normal
10	Front and rear tires	Normal air pressure, no scratches and excessive wear
11	fasteners	No loosening
12	lube	Sufficient and good lubrication
13	Leakage	There are no leaks in the engine, fuel tank, shock absorber and battery
14	Ministries interfered	There is no excessive wear, abnormal noise and interference in all parts
15	Instruments, control parts	The signal devices on the instrument are working normally, and the displayed vehicle status should be normal (if it has a self-test function); Each control part can be operated normally and function normally
16	Battery level display	The remaining power is sufficient
17	OBD faulty lamp	The fault lamp should have no fault prompt
18	other	Check as needed

Air filter element replacement

Note:

●Please replace the air filter element of the vehicle in strict accordance with the vehicle maintenance cycle.

Steps:

1. Remove the corresponding parts

a. Refer to the "Vehicle Cover Disassembly" to remove the left envelope panel.

2. Replace the filter element of the air filter

a. Use the cross batch to remove the 5 self-tapping nails (1) on the left air intake cavity of the air filter, and take out the outer cover of the left air inlet cavity (2) and the air filter element (1) inturn.

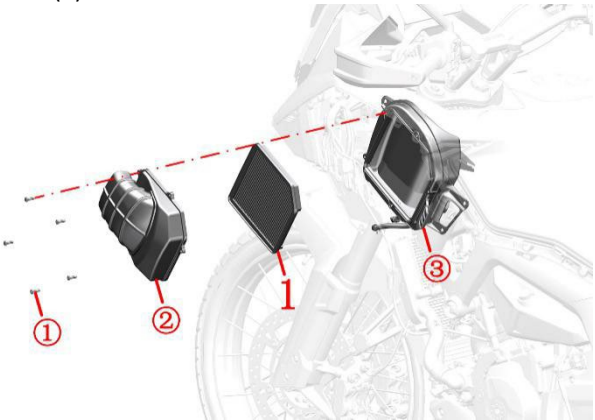

b. Install the new air filter element (1) back into the left intake chamber ③, then install the outer cover ② of the left intake chamber back and secure it with 5 self-tapping screws ①, with a torque of 2.1 ～ 3 N.m.

c. Arrange the wiring harness and harness joints.

3. Check the waste oil pipe

a. Wipe the surface of the waste oil pipe and visually see if there is any liquid. If so, remove the waste oil pipe clamp with pliers, clean the waste oil pipe, and then put it back on. Pay attention to increase the frequency of inspections when the air humidity is high.

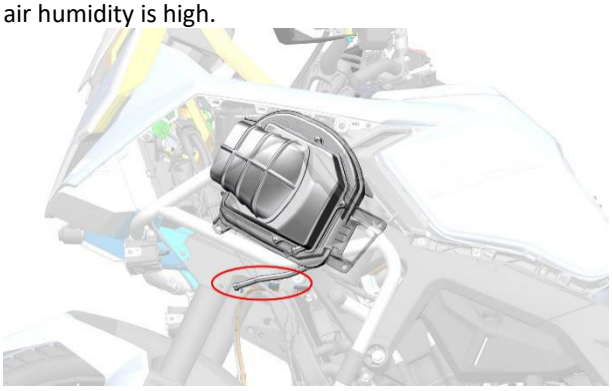

4. Reassemble the corresponding parts

a. Refer to the removal procedure to put the left bracket back on.

WARNING

●Every 10,000 km (6,200 miles), the air filter and engine air inlet filter should be replaced.

●The air filter element and engine air inlet filter should be cleaned regularly according to the provisions of the regular maintenance and lubrication table.

● If you often ride in wet or dusty areas, you should have your air cleaner filter accessed more frequently. Always check the air filter drain line frequently.

●If the filter element is damaged, it must be renewed, otherwise the dirt will be towards the engine, causing engine damage.

●Make sure the filter is in place.

CAUTION

● If the air filter is clogged with dust, it will increase the intake resistance and decrease the output power.

●If the replacement cycle is not reached, if there is no damage and the surface of the filter element is relatively clean, you can use a dust gun to blow air from the clean side of the filter element to blow away the dust on the surface of the filter element.

● Do not allow water to enter the air filter when washing the vehicle.

Muffler overhaul and maintenance

1. Disassembly of the engine guard

a. Lay down the main bracket to keep the vehicle firmly in place. If the vehicle has been started in a short period of time, please leave the vehicle for a period of time before proceeding with the following operations.

b. Use the plum T25 hexagon inside hexagon to remove the 2 bolts (1) of the 2 M6×16 in front of the engine guard, and remove the flanging bushing. Standard torque: 6 - 8 N.m

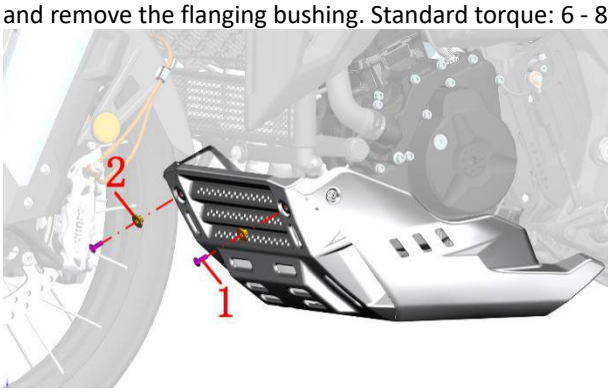

c. Use the plum T25 hexagon inside hex to remove the 3 bolts (1) and flanging bushing (2) of the engine guard, and remove the engine guard. Standard torque: 6 - 8 N.m

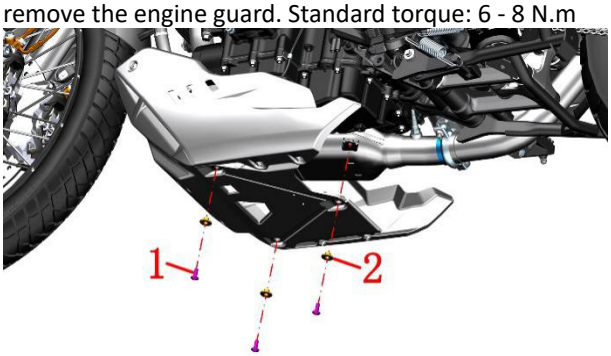

2. Check the muffler

a. Check whether each part of the muffler is damaged, scratched, etc., and check whether the exhaust port is leaking. Check the connection between the rear end of the muffler and the front end of the muffler for air leaks and check for loose muffler clamps.

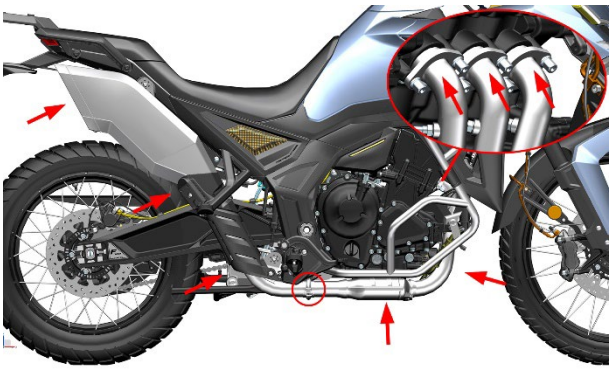

b. If there is a slight air leakage at the connection between the engine and the muffler, you can first try to tighten the exhaust nut (3) with 6# hexagon socket; standard torque:25±1.5. If the problem is not resolved, the muffler needs to be removed and replaced with a new engine exhaust gasket (4). The specific disassembly method can refer to the disassembly of the muffler.

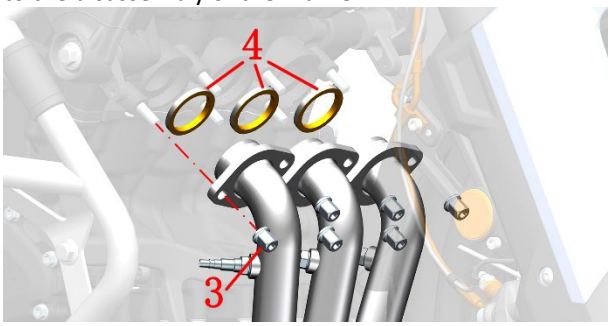

c. If there is a slight air leakage at the connection between the rear muffler and the front muffler, you can try to tighten the stainless steel clamp of the muffler (5) with 6# hexagon socket (Some vehicles produced in the early stage) or T45 Torx hexagon socket; standard torque:18±3 N.m If the problem cannot be solved, replace the muffler graphite washer with a new one (6). The specific disassembly method can refer to the disassembly of the muffler.

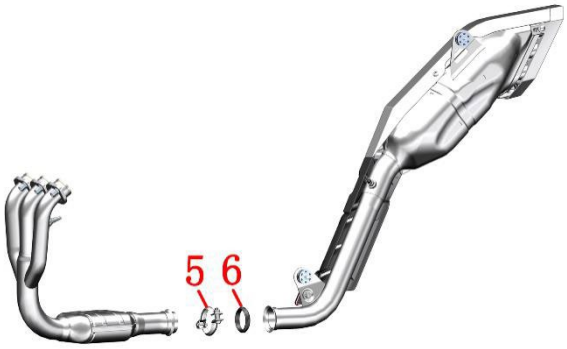

3. Check the muffler installation bolts

a. Check whether the two bolts ⑦ and ⑧ connecting the rear muffler to the frame are loose, and use a T50 wrench with a center hole (for some early-produced vehicles) or a 14# socket to tighten bolt ⑦, and a T45 wrench to tighten bolt ⑧. The standard torque for bolt ⑦: 65±5 N.m. The standard torque for bolt ⑧: 25±3 N.m.

4. Disassembly of the muffler

a. Refer to "Removal of Engine Guard" to remove the engine guard.

b. Refer to "Disassembly of Covers" to remove the left and right panels and the lower part of the left and right surrounds.

c. Find and unplug the three connectors of the oxygen sensor from the surrounding inner lining, and untie the two cable ties that hold the oxygen sensor harness in place.

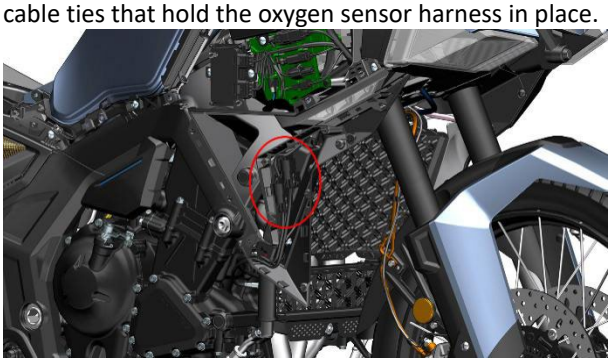

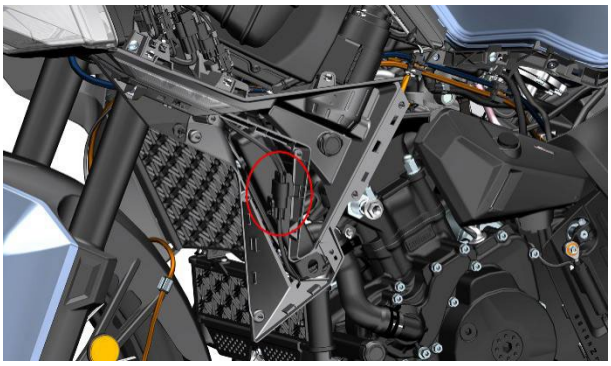

d. Use the 8# sleeve to remove the 4 bolts (9) on the inlet and outlet pipes of the engine; Then use the 8# sleeve to remove the 1 bolt (10) that holds the oil cooler in place. Then rotate the oil cooler to the appropriate position in the direction of the front of the motocycle. Note: Inlet and outlet tubing. Standard torque of bolt ⑾: 12±1.5 N.m.
Disengaging the oil cooler may cause a small amount of oil to drip off.

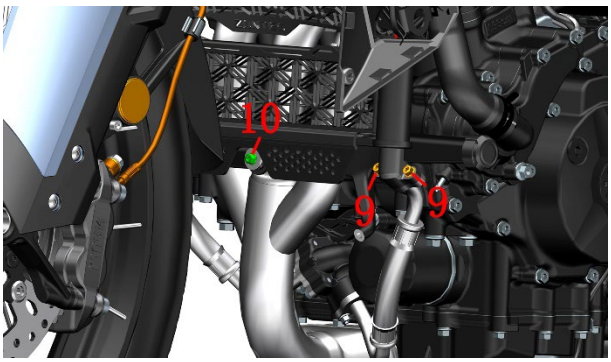

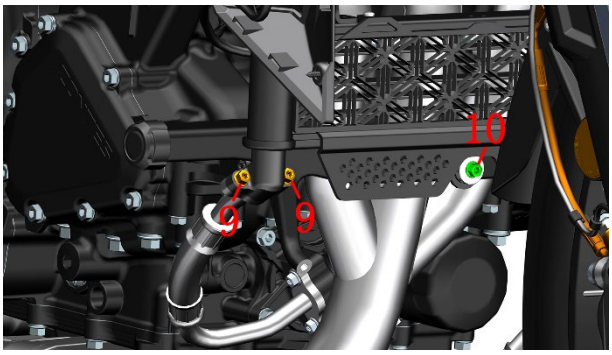

e. Use a T50 pattern wrench with a middle hole to remove the 2 bolts (11) on the lower guard bar mounting bracket and remove the lower guard bar mounting bracket. Standard torque of bolt ⑾: 45±5 N.m.

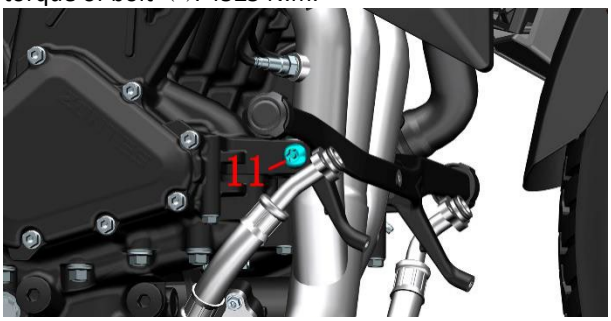

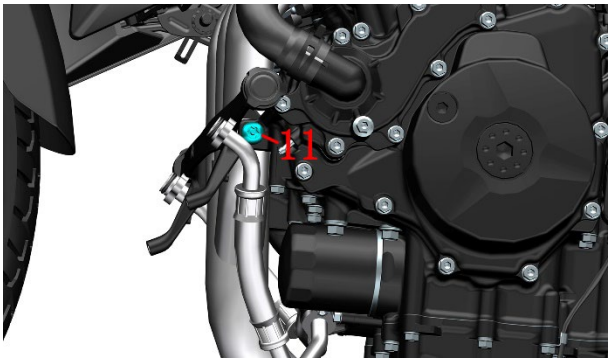

f. Use 6# hexagon socket to remove 6 exhaust port nuts (3). Standard torque:25±1.5.

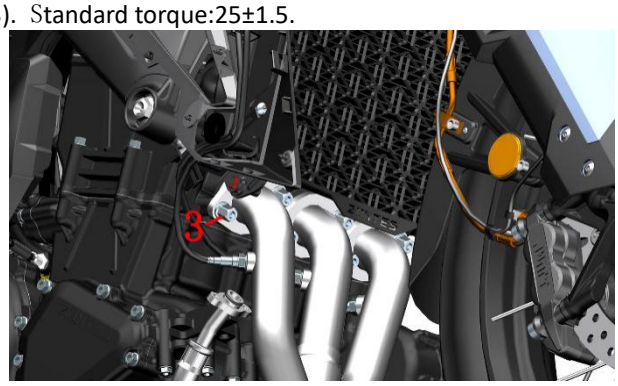

g. Use a T50 wrench with a center hole (for some early-produced vehicles) or a 14# socket to remove bolt (7), and a T45 wrench to remove bolt (8). Remove the muffler. Note: When removing bolts (7) and (8), support the front of the muffler; when completely removing them, ensure that the engine exhaust port gasket (4) at the connection between the muffler and the engine is not left behind. The standard torque for bolt (7): 65 ± 5 N.m. The standard torque for bolt (8): 25 ± 3 N.m.

5. Reassembly of muffler and engine guard

a. After the muffler is overhauled and maintained, make sure that all bolts are tightened and there is no omission, and then install the engine guard plate back.

DANGER

● It is forbidden to touch all metal surfaces of the muffler during engine operation or after riding to prevent burns.
● The vehicle must be parked on a level, stable ground or lifting platform.
●If a new exhaust port gasket needs to be replaced, the muffler must be completely cooled before operation.

WARNING

● Do not hit the throttle for a long time.
●Heavy load and long-term low-speed driving will cause damage to the engine and muffler.
●It is forbidden to use leaded gasoline to avoid the failure of the catalyst and the loss of exhaust gas purification ability.

CAUTION

●If you need to remove the front muffler or rear muffler for other operations, it is recommended to cover the air intake and outlet holes of the front and rear muffler with masking paper to prevent foreign objects from entering.

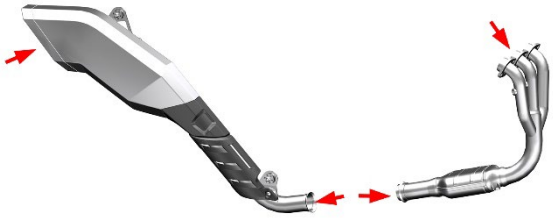

● Keep the drain hole at the bottom of the muffler clear to prevent condensate from accumulating inside the muffler.

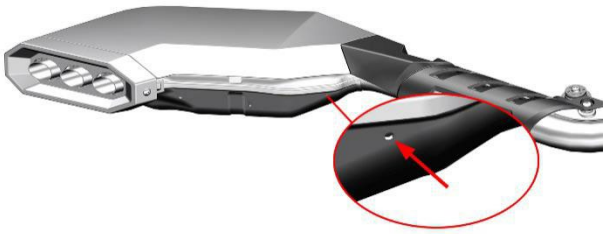

●Oil, mud and other stains on the surface of the muffler should be cleaned up in time.

Inspection and replacement of spark plugs

Note:
●Before disassembly, use a dust blowing gun to blow off the dust near the spark plug.
●After removing the spark plug, it is necessary to prevent foreign matter from falling into the engine.

1. Disassemble the spark plug

a. Refer to the steps of "Replacing High-pressure Fuel Pipes" to remove the fuel tank.

b. Refer to "Removing the Air Filter" to remove the air filter. And put the wiring harness in order.

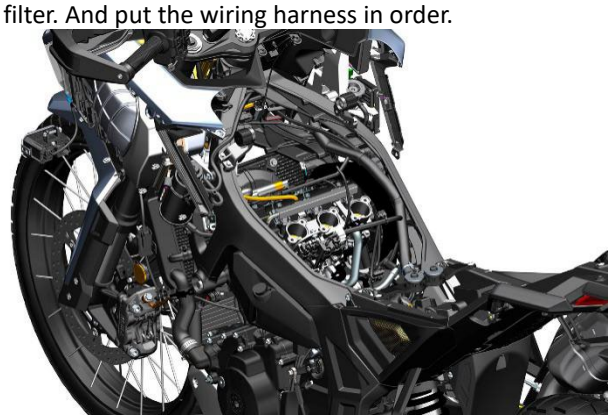

c.Unplug the 3 connectors on the ignition coil. And tidy up the wiring harness.

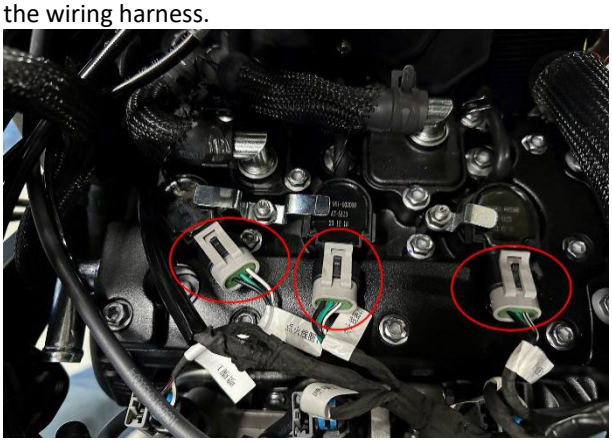

d.Use a 10# sleeve to remove 2 ignition coil pressure plates, and take out 3 ignition coils. The standard torque for the nut is 12 N.m.

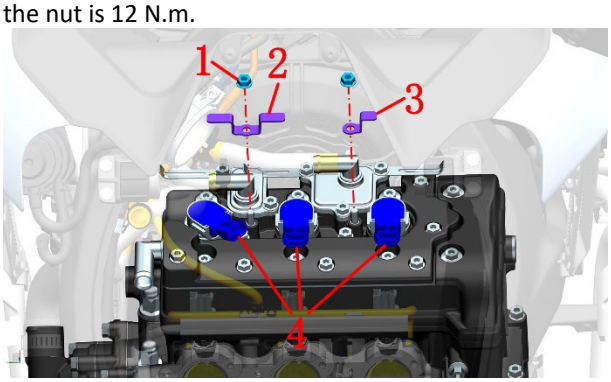

e. Use a blow gun to blow off dust, debris, etc. near the spark plug.

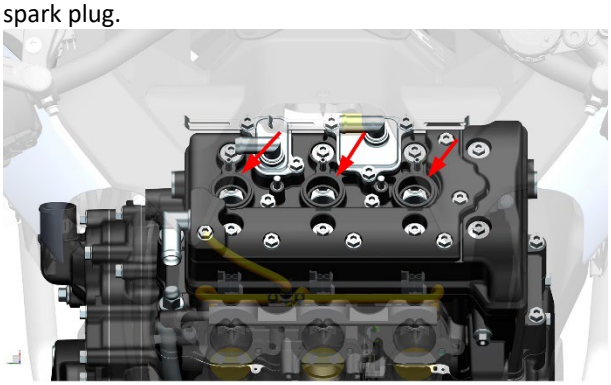

f. Remove the spark plug by rotating counterclockwise with the vehicle's own on-board tool or the special 14# spark plug sleeve.

g. After removing the spark plug, seal the spark plug mounting hole with masking paper or other soft plastic bag to prevent foreign matter from entering the engine.

2. Check the spark plug

a. Check whether the insulator is cracked or damaged, and whether the central electrode is worn, fouled, corroded, over-carbonized or discolored (the color of the ceramic insulator around the intermediate electrode of the spark plug should be light brown). If so, replace the spark plugs with new ones.

b. Clean the electrode with a special spark plug cleaner. Use a hard wire or steel needle to remove the attached carbon deposits.

c. Check the gap between the center electrode and the side electrode with a feeler gauge.

d. If necessary, the gap can be adjusted by bending the side electrode, and pay attention to the strength when adjusting.

e. Clean the surface of the spark plug gasket and the joint surface, and wipe off the dirt on the thread.

f. Screw it back onto the engine by hand, and then use the tool to rotate clockwise to the standard torque.

Spark plug model: BN8RTIP-8 spark plug

The resistance value between the wiring screw and the central electrode: 3~7.5KΩ

Clearance: 0.7-0.9mm (0.031-0.035 in)

Torque: 13N.m.

3. Install the spark plugs

a. Refer to the spark plug disassembly procedure to restore the spark plug and all parts.

DANGER

●The vehicle must be parked on a level, stable ground or lifting platform.

●It is necessary to wait for the engine to cool down completely before operation..

WARNING

●Never pull or tap the center electrode.

●If the engine is damaged by replacing the spark plug with improper calorific value or inferior quality, it is not within the scope of the three guarantees.

●The torque of the spark plug should not be too large, and the threads should be manually screwed in before tightening. If there is no torque wrench to replace the new spark plug, you can use your hand to screw it until there is resistance, and then rotate it 1/2 turn, if you use the old spark plug to screw it until there is resistance, then rotate it 1/8 turn; If possible, it should be corrected to the standard torque as soon as possible..

●Attention and sequence when disassembling the plastic buckle to avoid buckle breakage.

Overhaul and maintenance of cooling systems

DANGER

● The vehicle must be parked on a level, stable ground or lifting platform.

●Operation can only be carried out after the engine and muffler have cooled down.

●Swallowing or inhaling coolant can be harmful to the human body.

CAUTION

●Regularly check the coolant level and always keep it at a position not lower than the "L" line.

●It is recommended to replace the coolant every 3 years or 30,000 kilometers (18,641 miles).

●Swallowing or inhaling coolant can cause some harm to the human body. Wash your hands, face, and any exposed skin immediately and thoroughly after each addition of coolant. If swallowed, contact a poison control center or hospital immediately; If inhaled, immediately move into a ventilated environment. If it accidentally gets into your eyes, you should immediately rinse your eyes with plenty of running water and seek medical attention in time. Always keep out of reach of children and pets.

●The engine coolant must be suitable for aluminum radiators, based on ethylene glycol. Use a coolant suitable for aluminum radiators, which consists of a coolant concentrate mixed with distilled water in a certain proportion. If water needs to be added, only distilled water can be added, as other water quality may corrode the engine cooling system or cause more serious consequences.
●Select the appropriate antifreeze according to the lowest possible temperature in the local area. This vehicle is equipped with Total -35°C (-31F) green antifreeze. The total amount of coolant is: 1900ml, of which 1650ml needs to be added to the main water tank and 250ml needs to be added to the auxiliary water tank.
● The coolant may damage the paint surface, you should be careful when adding it, and a small amount of splashing should be wiped off immediately with a clean soft cloth.

1. Check the coolant

a. Place the vehicle on flat ground and inspect it with the engine cold.

b. Check the coolant level height in the auxiliary tank from the gap reserved by the decorative cover of the auxiliary water tank on the left side of the vehicle.

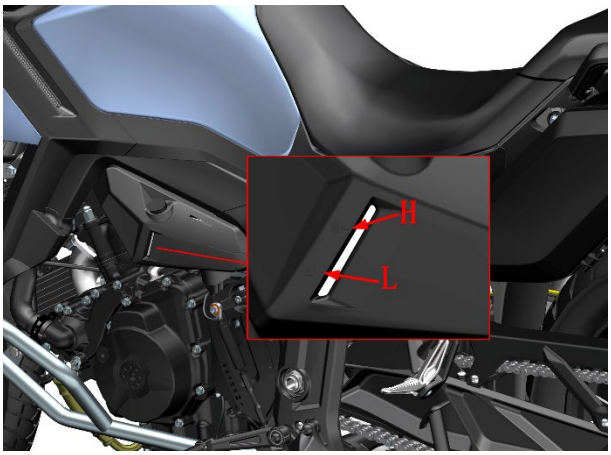

2. Addition of coolant (antifreeze) to the auxiliary tank

If the water level of the auxiliary tank is lower than the "L" line, an appropriate amount of coolant needs to be replenished. If there is no coolant in the auxiliary water tank, it is necessary to check whether the cooling system has leakage first, and it must be repaired before it can be replenished.

a. Open the lid of the auxiliary water tank and add coolant to the auxiliary tank with the help of the funnel, taking care to add a small amount between "H" and "L" several times.

3. Addition of coolant (antifreeze) to the main water tank

a. Refer to "Vehicle Cover Removal " to remove the vehicle's guard bar and right bumper panel.

b. According to the disassembly of the vehicle cover, remove the right surrounding panel and the right surround lower assembly. Unplug the two connectors of the fog lamp drive box.

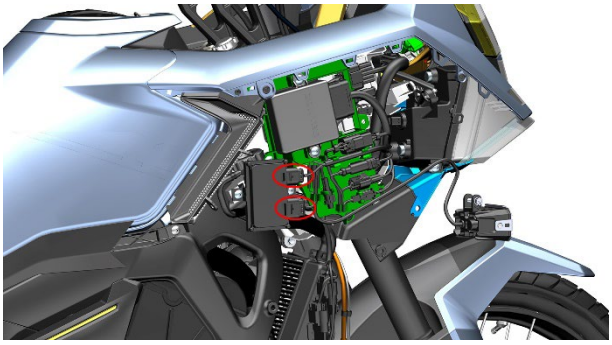

c. Arrange the wiring harness next to it, use the plum T25 hexagon to remove the 2 shoulder bolts (1) that fix the fog lamp drive box and remove the fog lamp drive box (2). standard torque is 2～3N.m.

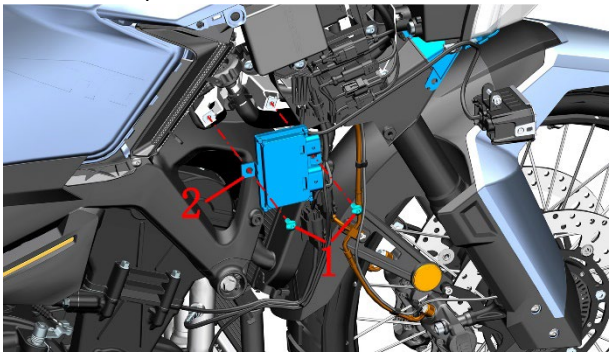

d. Remove the main tank filler (3) by pressing down and rotating counterclockwise.

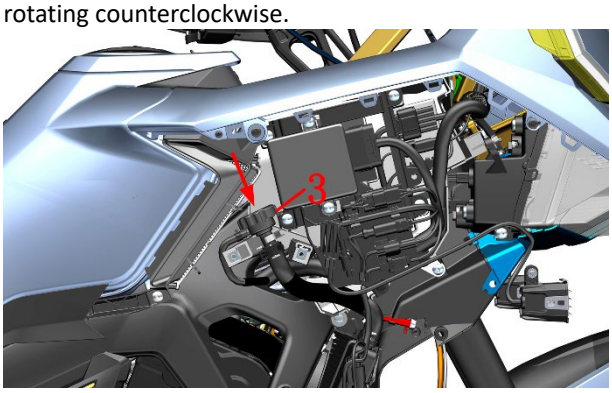

e. Wear waterproof gloves and use the extended funnel to add coolant to the main tank inlet. Until the level of the water filler no longer drops.

f. Turn on the vehicle and start the engine, let the engine idle for a while, Properly intermittently feed and drain oil for 3000-4000 rpm to speed up the rise of water temperature, continue to add coolant after the liquid level of the water

nozzle drops, and when the water temperature rises above 90℃ (194F), repeat the operation of refueling and draining oil and replenishing coolant, and wait until the liquid level no longer drops. Note: Do not touch the coolant in the vehicle with your hands after starting the vehicle to prevent burns.

g. Press down on the main tank filler and rotate clockwise to tighten the main tank filler.

h. Subsequently, all parts are put back in according to the disassembly procedure.

4. Drain the coolant

a. After placing the vehicle in a flat area, place a suitable oil tray under the drain bolt. Use the 10# sleeve to remove the drain bolt (4) on the water pump cover and remove the copper pad (5). Standard torque is 20±1.5 N.m.

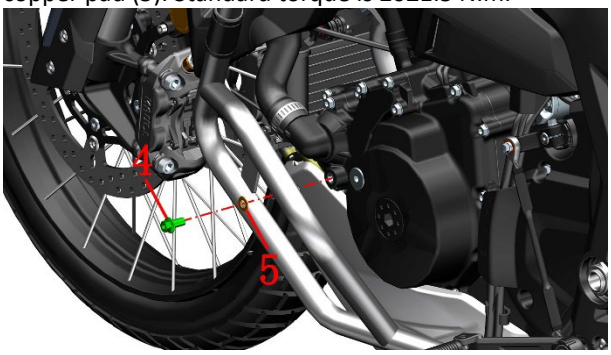

b. You can refer to the steps to add coolant to the main water tank and unscrew the water nozzle cap to accelerate the outflow of coolant.

c.Wipe all the joint surfaces clean with a non-woven fabric, check whether there are scratches on the joint surfaces of the drain bolts, and replace them with new ones if so. The copper pad needs to be replaced every time it is disassembled.

5. Check if the fins of the radiator tank are deformed or if the air ducts are blocked

a. Refer to the "disassembly of the vehicle covering" to remove the left surround lower assembly and the right lower bracket assembly.

b. Remove the 4 bolts (6) that fix the radiator guard and remove the 2 wire clamps (7), and then use compressed air or low-pressure water guns, brushes, etc. to remove sediment, insects and other dirt on the surface of the radiator. When using compressed air, be careful not to get too close to the fins. It is forbidden to directly flush the radiator with a high-pressure water gun, so as to avoid the deformation of the fins and the blockage of the air duct. Standard torque for bolt is 4～5 N.m.

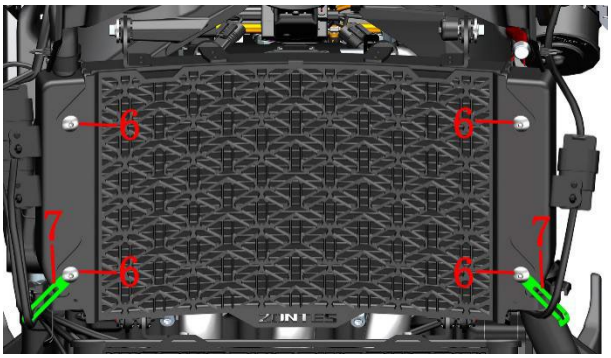

c. Use a flat carving knife or a small flathead screwdriver to straighten the deformed fins. If the fins are deformed by more than 20%, a new radiator will need to be replaced.

6. Overhaul and maintenance of oil coolers

It is recommended to check the oil cooler every time you change the oil.

a. Refer to "Removing the Engine Guard" to remove the engine guard.

b. Use a clean cloth to wipe the connection between the oil cooler and the inlet/outlet oil pipe to check for oil leakage.

c. If there is slight oil leakage, place the oil drain tray under the corresponding oil pipe, then use the 8# sleeve to remove the oil pipe that has leaked oil, replace the 13.8×2.5 acrylic glue O-ring on the oil pipe and install the oil pipe back again. and tighten the fixing bolts of the tubing; The torque is 12±1.5 N.m. Note: This operation should be performed with the engine cooled down.

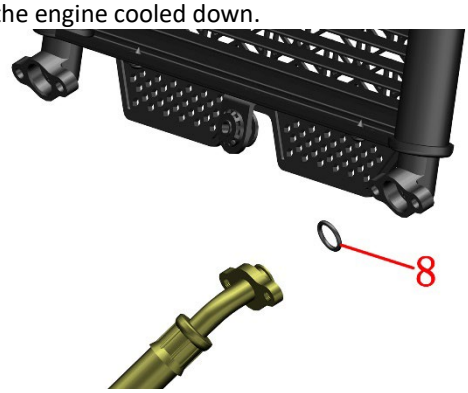

d. If the oil leakage phenomenon cannot be solved by replacing the O-ring (8) on the oil pipe, the corresponding oil leakage oil pipe needs to be replaced.

7. Check the water/oil pipes for leakage and aging

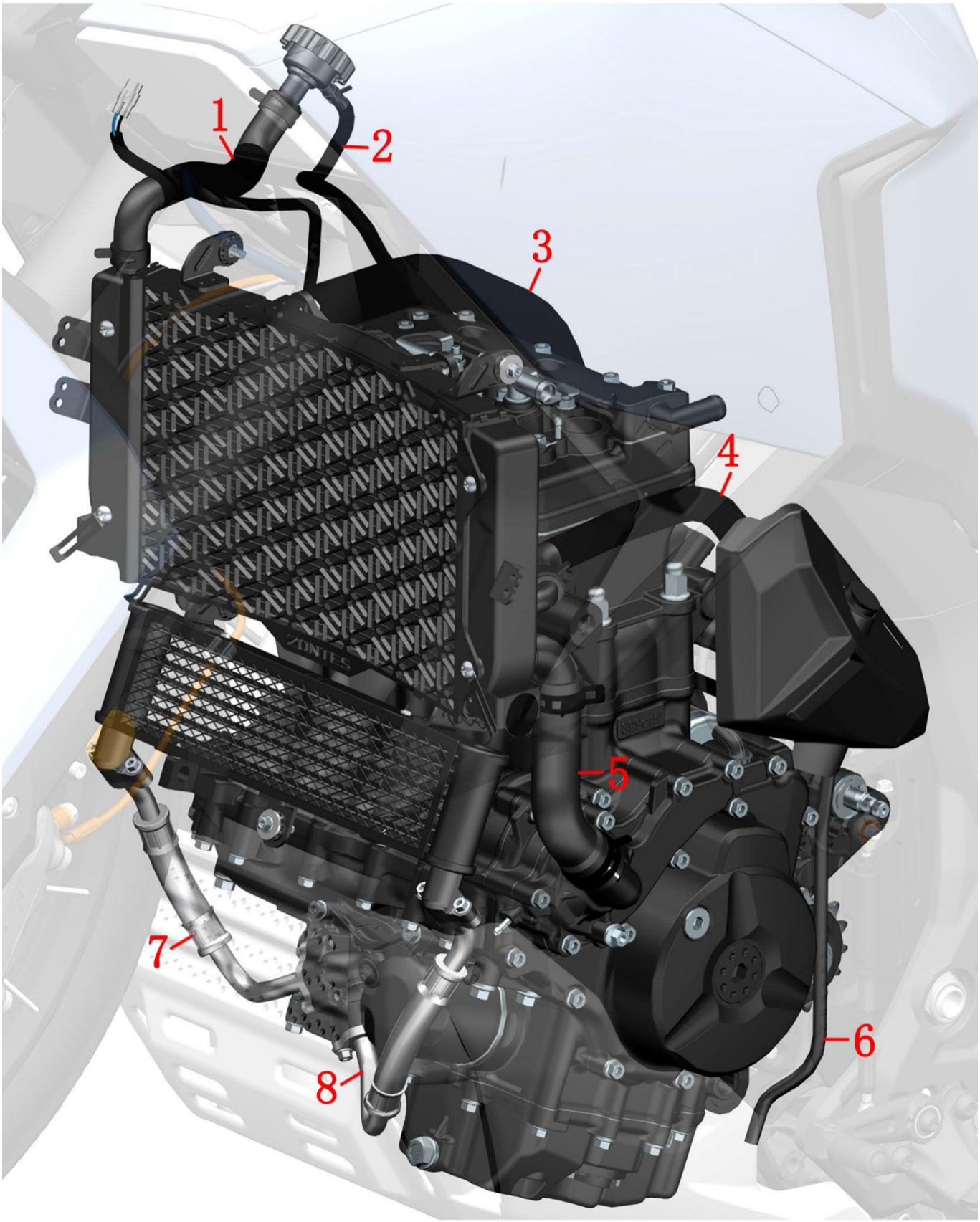

1-ZT703—F The connecting water pipe of the water tank filling port2-ZT703—F Connecting water pipe for the auxiliary tank3-ZT703—F Main tank inlet pipe4-ZT703—F Small circulating water pipes5-ZT703—F Engine water inlet pipe6-ZT310—R Leaky pipe in the auxiliary tank7-ZT703—F Engine inlet pipe8-ZT703—F Engine outlet pipes

Engine Oil and Filter Replacement

DANGER

●The vehicle must be parked on a level, stable ground or lifting platform.
●Operation is required to wait for the engine and muffler to cool down.
●Add oil to prevent oil from dripping onto the surface of the muffler.
●Motor oil should be kept away from children and pets. Short-term exposure to motor oil may irritate the skin. Please wear long-sleeved clothes or sleeve covers, and wear anti-shake gloves before changing the oil. If it gets on the oil, clean it thoroughly with soapy water.
●The replaced waste engine oil must be collected and handed over to a professional organization for proper disposal, and it is forbidden to dump it at will, dump it into the garbage bin or dump it directly on the ground.

WARNING

●The engine oil and gearbox oil should be changed according to the periodic table specified in the instructions.
●It is necessary to buy a regular and qualified engine oil, as poor quality engine oil will exacerbate engine wear, and in severe cases, it will lead to engine failure and shorten the service life.
●The amount of oil should be as required, too much or too little can cause engine damage.

CAUTION

●Copper gaskets and combination gaskets need to be replaced after dis-assembly; Both O-rings and gaskets are recommended to be replaced.
●The O-rings need to be assembled in place to avoid trimming.
●After removing the dipstick and fuel filler nut, it is necessary to prevent foreign objects from falling into the engine.

1. Put the oil

a. Start the vehicle, idle for 3-5 minutes, then turn off for 3-5 minutes (when the temperature is below 10°C (50F), the idle running time is appropriately extended)

b. Use the main bracket to park the vehicle securely.

c. Refer to "Removing the Engine Guard" to remove the engine guard. Note: Do not touch the muffler when disassembling to prevent burns.

d. Place the oil pan under the drain bolt.

e. Use the 14# sleeve to remove the drain bolts and gaskets. Note: Do not touch the engine oil directly with your hands when it comes out to prevent burns. Standard torque is 40±3 N.m.

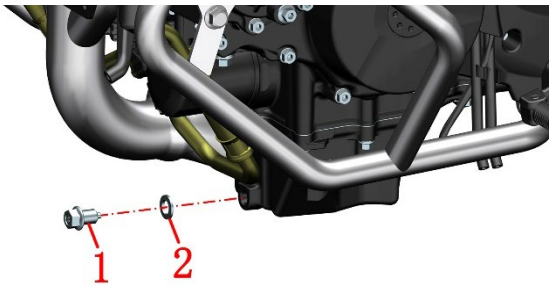

f. Unscrew the engine fuel filler cover counterclockwise, remove the fuel filler cover and O-ring, and use a clean non-woven fabric to place it on top of the fuel filler port to prevent foreign objects from entering the engine.

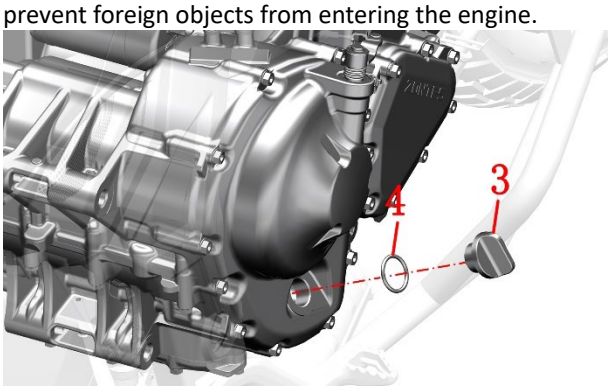

g. After waiting for the oil to flow out completely, use a clean non-woven fabric to wipe the oil drain bolts; Check whether there are scratches on the joint surface of the oil drain bolt, and replace it if so. Then use a clean non-woven fabric to wipe the joint surface of the engine and oil drain bolts.

h. Replace the gasket with a new one, and use the 14# sleeve to install the drain bolt and gasket back on the engine case. Torque: 40±3 N.m

2. Replace the Fine Filter

a. Use a 14-sided, 65mm cap filter wrench + a 1/2" (12.5mm) ratchet wrench to remove the fine filter. The Skadden model number of the filter wrench is 97401.

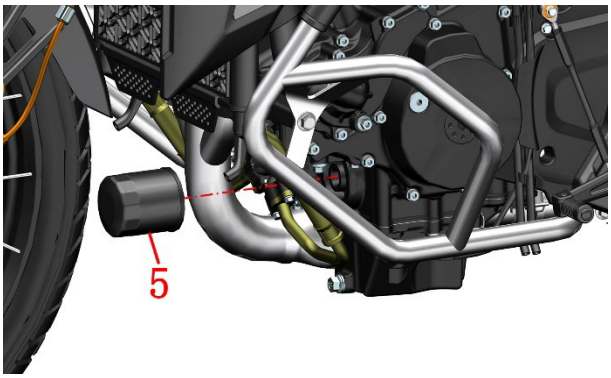

b. Drain the oil from the filter.
c. Use a clean non-woven fabric to wipe off the remaining oil and impurities on the engine.
d. A layer of oil is applied to the new fine filter seals and installed on the engine. Torque: 20±2 N.m.

3. Add oil

a. If the filter is replaced, 3.4 liters of motorcycle engine oil with a viscosity of SN10W-50 or higher should be used in a measuring cup, and 3 liters in a measuring cup if the filter element is not replaced.

b. After removing the filler cap, use the funnel filler cup to add oil to the filler port of the right crankcase lid of the engine.

c. Use a non-woven fabric to clean the filler port.

d. Check whether the O-ring is damaged or aged, wipe it clean if not, and replace it if so. The specifications of the O-ring used in the dipstick are: ϕ25×ϕ3.1.

e. Wipe the oil cap clean and rotate the oil cap and O-ring clockwise by hand to replace the right crankcase cap of the engine.

4. Confirm the Oil Level

a. After starting the vehicle to idle for a few minutes, check whether there is leakage in all disassembled locations, and if so, it needs to be checked.

b. After idling for 5 minutes, turn off the engine for 3 minutes, check whether the oil level meets the standard, and if it does not meet the standard, it needs to be withdrawn or replenished to the standard. The inspection method is: keep the vehicle upright, observe the oil inspection window, and be able to see the oil level and liquid level from the oil inspection window, which means that it meets the standard.

c. After confirming that everything is correct, replace the engine guard plate as described in the removal procedure.

Brake, Clutch, cable clearance adjustment

Adjust the clutch handle and clutch line

1. Check

a. Check whether the rubber sleeve and clutch cable of the left hand are damaged.

b. Whether the free stroke is too large, too large is easy to cause wear and failure of the clutch and shift mechanism (free stroke: 2~4mm).

c. Whether the clutch cable comes out of the card slot.

d. Clutch handle free travel: 10~15mm.

Check the clutch cable for bending or breakage. Replace if necessary. Lubricate the clutch cable with commercially available cable lube to prevent premature wear and corrosion.

2. Adjust the clutch cable clearance

Fine-tuning:

After removing the protective sleeve ①, loosen the nut ③ with pliers, rotate the adjusting screw②, and finally tighten the lock nut ③. After adjustment, pay attention to the slots of the nut ③, the adjusting screw ② and the rocker arm seat should be staggered to prevent the cable from coming out. Note: The openings of adjusting screw ② and nut ③ must face downward.

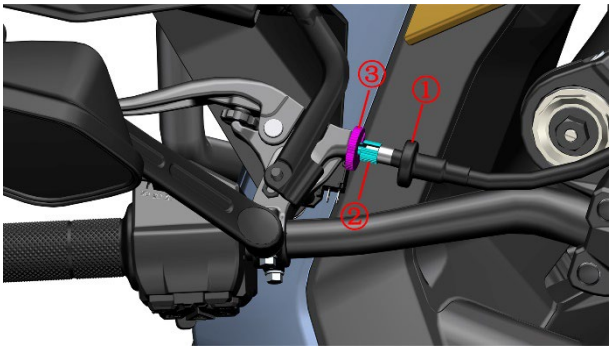

Big Tweaks:

If the fine-tuning cannot meet the requirements, loosen the nuts ③ and ② with an open wrench, rotate the adjusting screw ①, and finally tighten the lock nuts ③ and ② again.

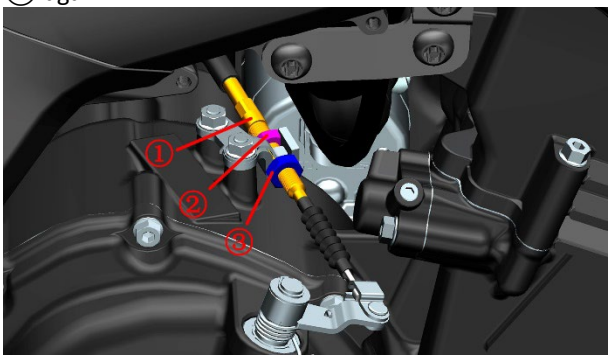

c.If neither of these adjustments is effective, a new clutch cable will need to be replaced.

3. Lubricate the clutch cable

If there is a large rotational resistance and the clutch bending and loose strands of the core are excluded, an appropriate amount of lubricating oil, such as sewing machine oil, can be added. ***Pay attention to choose a cable with good low temperature resistance to prevent freezing in winter and causing the cable to be unable to move.***

a. Screw the slotted nuts and bolts to the slotted place with the clutch rocker arm and take out the clutch line.

b. Use a syringe to draw a small amount of sewing oil into the gap between the clutch cap and the core, and turn the throttle as you inject.

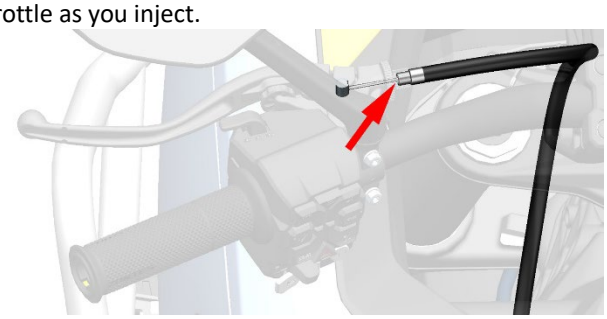

c.If lubrication does not solve the problem of high resistance, the throttle cable needs to be replaced.

⚠WARNING

●Excessive free stroke is easy to cause wear and failure of the clutch and shift mechanism.

●After adjustment, be sure to stagger the slotting on the nut, adjusting screw and rocker arm to prevent the cable from coming out of the slot.

●Do not use viscous oil to lubricate the cable, to prevent the viscosity from affecting the free movement of the cable.

4. Adjust the clutch handle

In order to accommodate more drivers driving this model, it is equipped with an adjustable clutch handle. Push the end of the handle to the end in the direction of the arrow, and rotate the adjustment wheel by hand in the direction of the arrow, increasing the distance between the handle and the rubber sleeve, and vice versa.

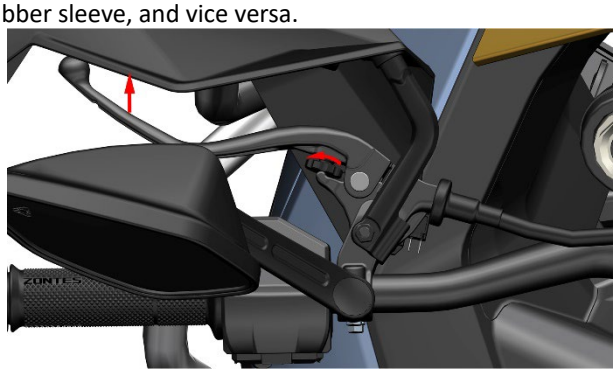

5. Replace the clutch handle

Remove the handle guard by referring to "Fork Assembly".

a. Pull out the two plugs of the front brake switch in the direction of the arrow, without distinguishing between the positive and negative poles.

b. Remove the bolts on the clutch switch with a Phillips screwdriver and remove the clutch switch. Standard torque is 1～1.5 N.m.

c. Replace the new switch, pay attention to aligning the limit hole between the switch boss and the brake main cylinder. Standard torque is 1～1.5 N.m.

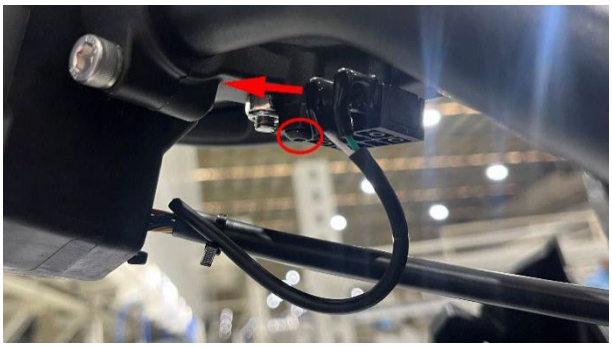

d.Remove the stud with a 10# socket or torx wrench to replace the clutch handle. Standard torque is 8～10 N.m.

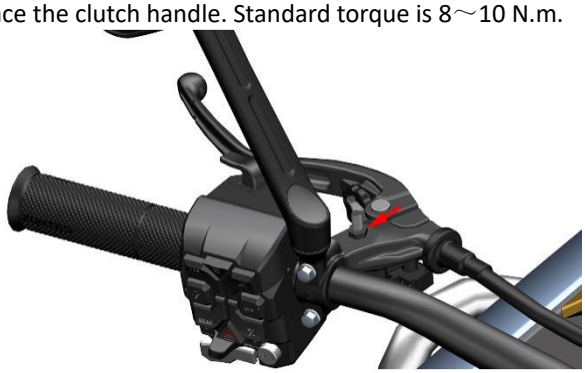

Adjust the brake lever, brake pedal, throttle cable

1. Check

a. Check whether the rubber sleeve and throttle cable of the right hand handle are damaged.

b. Check whether the right hand handles the rubber sleeve smoothly and whether it can automatically return to its position.

c. Hold the steering handle with both hands, turn to both sides, and turn the right hand handle rubber sleeve at the same time, and confirm whether the throttle can be reset normally at a certain steering angle every turn. If it cannot be reduced, it is necessary to lubricate the cable or the inside of the right handlebar; Or replace it with a new throttle cable, or a rubber sleeve for the right hand.

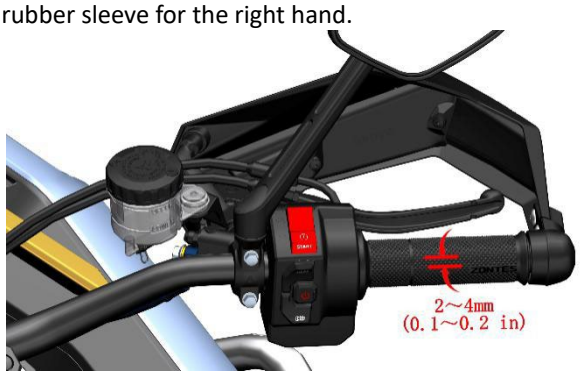

d. After starting the engine, turn the steering knob left and right to ensure that the idle speed remains unchanged during the steering process, and then turn off the engine.

e. Turn the right hand handle to check whether the cable gap is 2~4mm (0.1~0.2 in).

2. Adjust the throttle cable clearance

Fine-tuning：

After removing the protective cover, fix the adjusting solenoid ② with an 8# open-end wrench, and then loosen the nut ① counterclockwise with a 10# open-end wrench. Rotate the adjusting solenoid ② clockwise to reduce the free stroke, and expand counterclockwise; Adjust the gap to the specified value. After adjusting the clearance, lock the nut ①.

Torque：3.8 N.m（0.4 kgf.m,2.8 lbf.ft）.

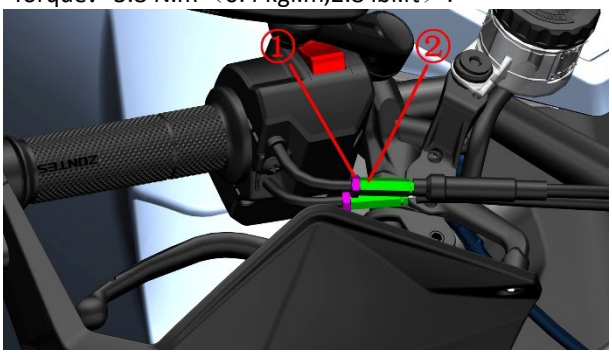

Big Tweaks：

If the above adjustments cannot achieve the desired effect, you can remove the throttle body assembly according to the description in "Removing the Throttle Body Assembly and Cleaning the Carbon Deposition". Use a 10# open-end wrench to loosen the 2 nuts on the bracket to adjust.Torque：3.0 N.m（0.3 kgf.m,2.2 lbf.ft）.

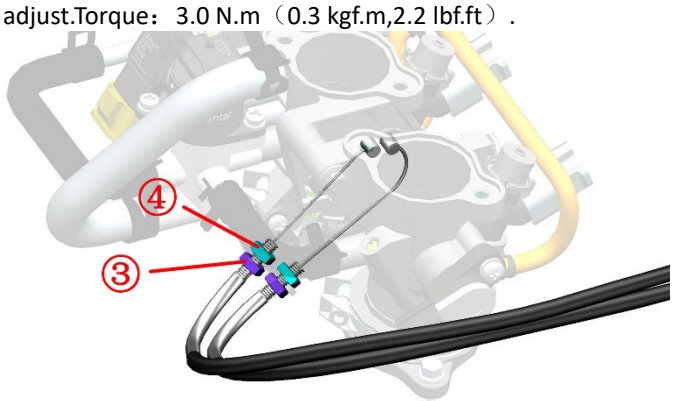

If neither of these adjustments is effective, a new throttle cable will need to be replaced.

3. Cables for lubricating the throttle

If there is a large rotational resistance and the throttle line is bent and the core is scattered, an appropriate amount of lubricating oil, such as sewing machine oil, can be added.

a. Use a Phillips screwdriver to remove the three bolts behind the handle switch and remove the upper part of the switch. Standard torque is 1～1.5 N.m.

b. Use a syringe to absorb the sewing machine oil and inject a small amount of oil into the gap between the throttle cap and the core several times, and turn the throttle while injecting.

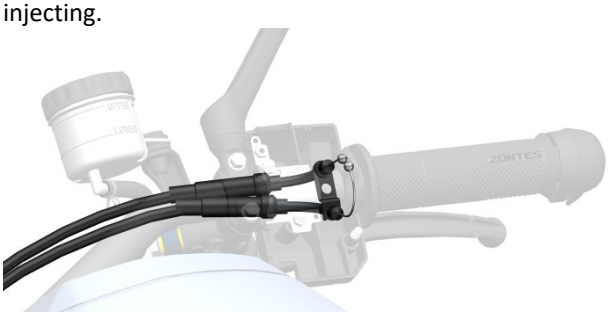

c. If the fault of high resistance cannot be solved after lubrication, the throttle cable needs to be replaced.

WARNING

●After the clearance adjustment of the throttle cable is completed, ensure that the throttle handle can automatically turn back to the closed position, and the engine idle speed cannot be increased due to adjusting the cable.
●After adjustment, the engine idle speed cannot increase when the front of the motocycle is turned.
●Do not use viscous oil to lubricate the cable, to prevent the viscosity from affecting the free movement of the cable.

4. Adjust the brake lever and brake pedal

Adjust the brake lever and brake pedal according to the section "Servicing - Braking systems".

5. Replace the brake lever and brake pedal

Replace the brake lever and brake pedal according to the section "Servicing - Braking System".

Idle Speed

Attention:

●Before checking the idle speed, other engine maintenance items should be checked and the condition is normal before proceeding.
●The following items should be checked before checking the idle speed:

The maintenance indicator light "🔧" should not be lit.

The spark plug status has been checked.

The air filter and air inlet filter have been inspected or replaced.

Check the throttle clearance.

●The limit screws on the valve body are not allowed to be adjusted without permission.

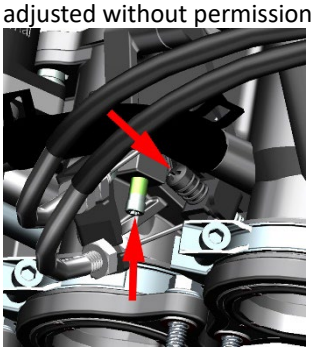

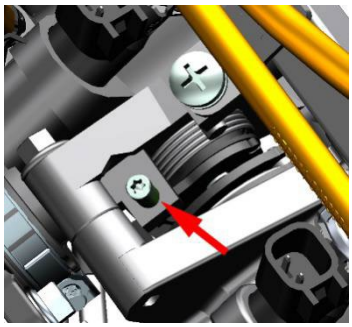

Check the idle speed:

Checking the idle speed of the engine should be done with a hot engine.

Idle speed: 1500±100 rpm.

If the idling speed is not within the standard range or the idle speed is turned off, it should be checked and handled by professional service personnel at the Zontes special maintenance point or qualified maintenance unit.

Abnormal idle speed or flameout should be checked or repaired according to the troubleshooting process in the chapter "EFI System" in this manual. Fuel evaporative pollutant control system.

Fuel evaporative pollutant control system

703F fuel evaporates

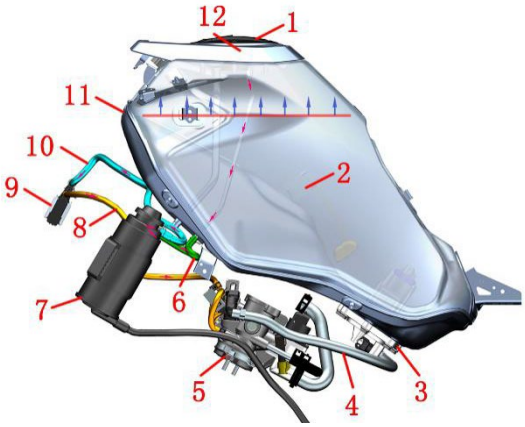

1-Fuel Tank Lock 2-Fuel Level Sensor 3-Fuel Pump 4-High Pressure Fuel Hose 5-Throttle Valve Body Assembly 6-Adsorption/Snorkel 7-Carbon Canister 8-Solenoid Valve Outlet Pipe 9-Carbon Canister Solenoid Valve 10-Solenoid Valve Intake Pipe 11-Fuel Tank 12-Air- Fuel Separator (Inside Tank Lock)

Fuel evaporation:

Fuel→Fuel separator (inside the tank lock) → adsorption/breather pipe→ solenoid valve inlet pipe→ solenoid valve outlet pipe→ throttle body assembly→ intake manifold→ cylinder

The fuel evaporative contaminant control system can only be inspected after the cover is removed.

Inspect the canister for cracks or damage.

Inspect the adsorption/snorkel for cracks or damage.

Check whether the canister solenoid valve is working properly.

Check whether the inlet and outlet pipes of the solenoid valve are cracked or damaged.

Check that each hose is bent for unsmooth airflow.

Fuel lines

Attention:

●When disassembling the high-pressure Fuel pipe, a small amount of fuel will flow out, and it needs to be undertaken with an Fuel tray.
●Work should be carried out in an open and ventilated place. Smoking, phone calling, and all other behaviors that may cause sparks are prohibited at the work site.

1. With the help of an endoscope with LED light, the fuel line is inspected for leaks

703F

The picture above is a schematic of the equipment with LED endoscope, the picture comes from the Internet, and the copyright belongs to the author of the original picture. Do not use for any other purpose.

2. Replace the high-pressure fuel line

a. Remove the cushion first. Use a 5# hexagon tool to remove 6 bolts, use a cross batch to remove the expansion nails, pay attention to unplug the fuel tank lock first, and then remove the fuel tank lock and fuel tank decorative cover. Standard torque is 3～4 N.m.

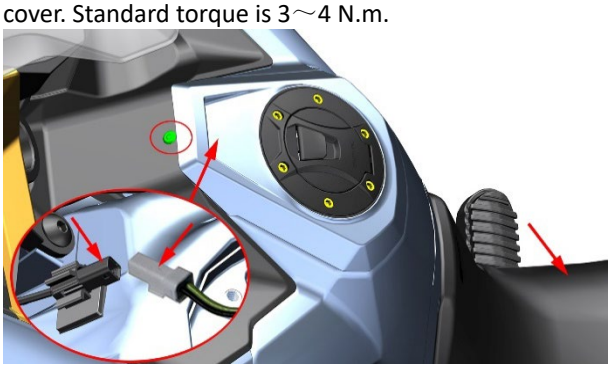

b. After pulling out the 9 buckles of the left and right surrounding panels, remove the left and right surrounding panels respectively.

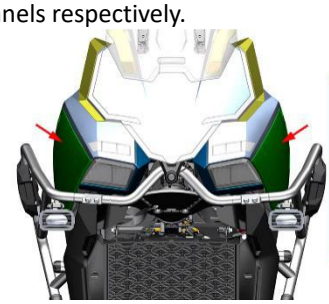

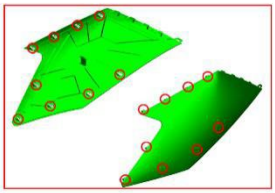

c. Remove the 2 torx groove plate head bolts (3) with a hole torx wrench, and remove the 2 fuel tank flat pads (4) and glue pressing (5). Remove 2 inner torx shoulder bolts (1) with T25 torx socket sockets. Remove 2 expansion nails (2) with a cross batch. Standard torque for bolt ⑴: 6～8 N.m. Standard torque for bolt ⑶: 25 ± 3 N.m.

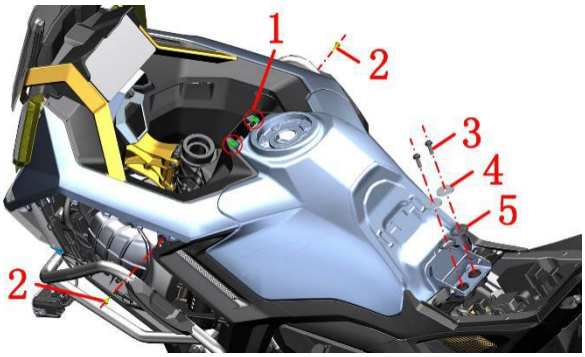

d. After pulling out the three buckles of the left and right fuel tank decorative covers, remove the left and right fuel tank decorative covers respectively.

e. Use a 4# hexagon tool to remove 2 hexagon shoulder bolts⑴. Standard torque for bolt ⑴: 6～8 N.m.

f. Use the hexagon tool to remove the 2 expansion nails in the direction pointed by the arrow pointing to the lower part of the left surround, and remove the right side in the same way.

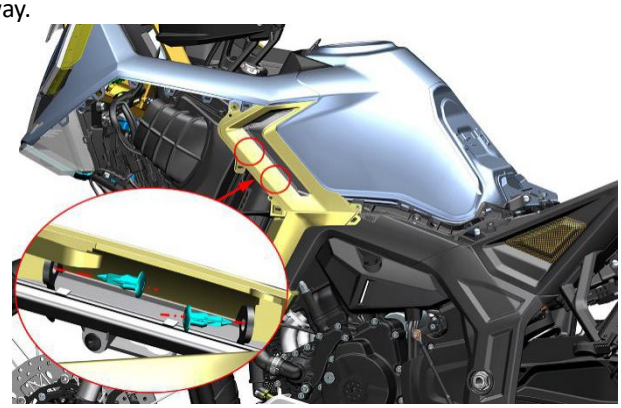

g. Gently pull the lower part of the left envelope in the direction pointed by the arrow with your hand, and remove the self-tapping screws behind the envelope with a cross batch. Lift it up slightly and remove the lower part of the envelope. The right side is removed in the same way.

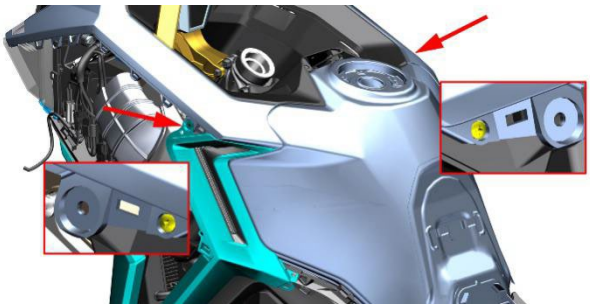

h. Gently support the tail of the fuel tank with your hand, pull out the fuel pump plug (3), start the engine and idle until the engine turns off. Turn the engine off switch to "", and lock the car after powering off. Press the anti-disengagement latch in the direction of the arrow and pull out the high-pressure fuel pipe (2). Press the anti-disengagement latch in the direction of the arrow, pull out the plug of the fuel level sensor (1), clamp the clamp on the carbon tube snorkel with needle-nose pliers, unplug the snorkel, and remove the fuel tank assembly. Standard torque for bolt (1): 6～8 N.m.

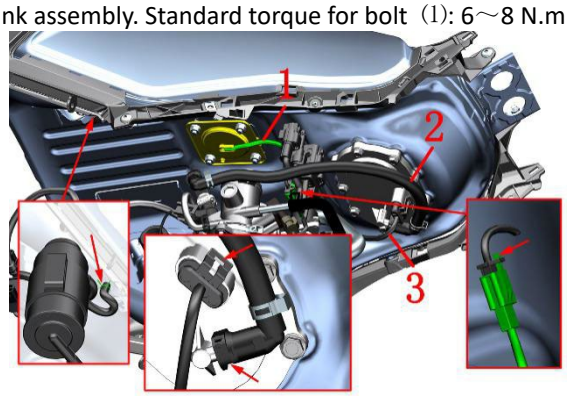

i.Refer to the steps of removing the air filter, remove the air filter first, press the anti-release lock in the direction of the arrow, and then pull out the high-pressure fuel pipe. After replacing the high-pressure fuel pipe with a new one, follow the disassembly steps to restore.

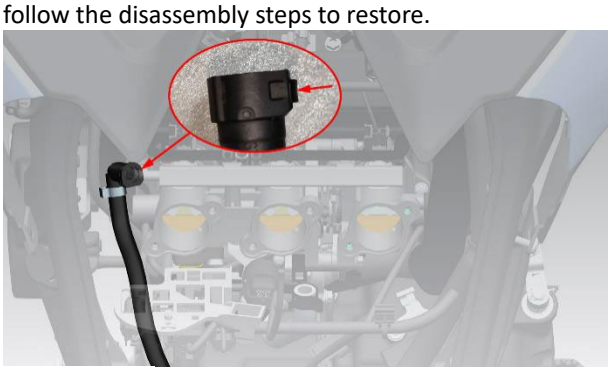

3. Fuel pump

3.1 Fuel pressure is measured using an fuel pressure gauge

a. Refer to the a~h steps of "replacing the high-pressure fuel pipe" in the fuel pipe, first unplug the fuel pump, start the engine and idle until the engine stalls. Turn the engine off switch to "", and lock the car after powering off. After wearing waterproof and oilproof gloves, press the anti-release latch, and then pull out the high-pressure fuel pipe at the end of the oil pump in the direction of the arrow.

b. Connect the high-pressure fuel pipe of the motocycle to the pressure gauge, and find a high-pressure fuel pipe to connect the pressure gauge and the fuel pump.

Start the vehicle and let the engine idle and measure the fuel pressure.

The standard pressure for the 2024 model is: 350±10kPa (3.57±0.1Kgf /cm2, 50.75±1.45psi). The standard pressure for the 2026 model is: 300±10kPa (3.06±0.1Kgf /cm2, 43.5±1.45psi). Check valve performance: holding pressure for 1 minute, the pressure should be ≥ 240kPa (2.45 Kgf/cm2, 34.8 psi).

3.2 Simple Tested fuel pumps

If there is no special instrument and equipment, a simple test can be done.

After unlocking the vehicle in the flame-off state, the flame-off switch will be hit “”, and the engine will not be started, and the fuel pump should be able to hear the working sound; Or pinch the high-pressure tubing from the bottom by hand, you should be able to feel the obvious pressure, and pay attention to avoid the muffler area to prevent burns. If the engine is in the starting state, the vehicle will be powered off for more than 10 seconds and then check according to the above operation.

4. Abnormal fuel pressure disposal

If the fuel pressure is higher than the standard value, the fuel pump needs to be replaced. If it is below the standard value, the following items should be checked:

a. Whether the fuel line is leaking;

b. Whether the snorkel pipe of the fuel tank is blocked or excessively bent;

c. Whether the fuel pump filter screen is blocked;

d. Whether the fuel pump is faulty;

e. Whether the fuel is insufficient.

WARNING

●When pulling out the executive tubing, pay attention to pulling it out in the direction of the axis, and do not press or push or pull the protruding part of the fuel pump and high-pressure fuel rail.

●All actions that may cause a fire, such as smoking and dialing mobile phones, are prohibited at the demolition site.
●The fuel pump is a precision component, which needs to be assembled in a dust-free workshop and requires strict testing, so it is forbidden to disassemble it by itself.

CAUTION

●After reinstalling the battery, the EFI system needs to be reset. For specific operation, please refer to the precautions in the driver's manual or the throttle valve body section of this manual.

Chain, rear flat fork wear block

Attention:

●Before lubricating the chain, it is necessary to ensure that the chain is completely dry. The chain is then lubricated with a special lubricant.

●Never use a new chain on a worn sprocket, or the new chain will wear out quickly.

●The open type is convenient for after-sales chain replacement, and the vehicle is original without opening. A special chain installation tool is required, and the tool needs to be purchased by yourself.

Maintenance and Inspection

1. Check

●Turn off the vehicle and lower the side brackets to shift the transmission into neutral. Check the slack in the middle of the lower part of the chain between the sprockets.

●Check whether the sprockets on the engine and the sprockets on the rear wheels are damaged, and replace them if necessary.

●Check whether the bolts on the sprocket are loose, and if so, tighten them to the specified torque.

Check whether the chain wear block on the rear flat fork is damaged and replace it if necessary.

● Check whether the chain is not properly adjusted.

●The chain is dry, badly corroded, or heavily dirty.

● Whether the chain has reached the end of its service life, the normal maintenance service life of the oil seal chain is 1 to 15,000 kilometers.

●Every 500-1000 kilometers when cleaning the oil seal chain, be sure to check the convex surface and plane on the rear flat fork wear block, when the plane is the chain inside and outside the chain plate contact has a deep groove of up to 1mm, it is necessary to replace the new rear flat fork wear block, to avoid the rear flat fork wear block is worn through the chain.

● When replacing the new oil seal chain, it is necessary to check the wear and tear of the rear flat fork wear block, such as the rear flat fork wear block is worn to a very thin by the chain, and there is a 1mm groove in the contact between the inner and outer chain plates of the chain, the new rear flat fork wear block must be replaced to avoid the rear flat fork wear block being worn through the chain and damaged by the chain.

2. Maintenance

●Wash the chain with a chain cleaner or neutral detergent designed for use with seals. If the chain is too dirty, clean it with a soft-bristled brush first.

●Wipe off water and neutral detergent and dry the chain

●Use chain oil, lubricating oil seals, rollers and inner and outer chain plates for motorcycle sealing chains.

●After fully lubricating the chain, wipe off the excess chain oil and let it stand for more than half an hour to allow the chain oil to fully penetrate and lubricate.

●Keep the chain lubricated

Replace the chain

a. Grind one end of one of the pins on the chain, remove the chain connecting rod, and remove the chain.

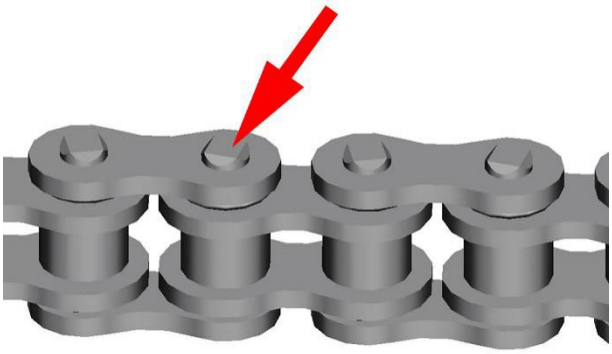

b. Purchase an open type chain for installation. Note: Special chain installation tools need to be used for installation, and the tools need to be purchased by themselves.

c. When using the open oil seal chain with union joint, it is necessary to use special tools to rivet, before riveting, it is necessary to evenly apply special lubricating oil to the oil seal of the pin shaft, the oil seal and chain link need to be clean and free of debris, when riveting the hole, it is recommended to rivet the hole many times, the pin hole can not be broken or cracked, and the size of the hole must ensure that the chain link at the riveting place rotates flexibly and the outer chain plate will not deviate or fall off in normal riding.

Adjust the chain

Adjust the slack of the transmission chain to the appropriate range. Check the tightness of the chain before each ride and adjust it if necessary.

a. Support the whole vehicle with the main support.

b. Shift the transmission gear to neutral.

c. Measure the tightness of the drive chain as shown in the figure (tightness: 35~45mm).

d. The tightness of the drive chain is incorrect, and it should be adjusted according to the following procedures.

Remove the latch with a vise and loosen the rear axle bolt with a 30# sleeve.

To lock the drive chain, rotate the bolts on the rocker arm toward the rear axle.

To loosen the tight drive chain, rotate the bolts on the rocker arm toward the front axle and push the rear wheel forward.

After completing the adjustment, fix the nut and the rear axle nut, install the latch into the corresponding hole, and bend the latch at least 120 degrees with a vise. The standard torque of the rear axle nut: 120~130N.m (12.2~13.3 kgf.m, 89~96 lbf.ft).

Replace the rear flat fork wear block

Replace the rear fork and remove the rear fork wear block according to the "Fork Assembly" in this book.

DANGER

●In order to ensure safety, the inspection and adjustment of the transmission chain should be done in advance before driving.
● Never adjust the chain while the engine is running.
●The slack of the transmission chain is too large, if the chain is off the chain, the engine may be damaged, or the rear fork is deformed or broken by the chain cutting damage caused by too much slack and high-speed movement, please check and adjust the chain slack when using the motorcycle.

WARNING

●Make the transmission chain reach the appropriate relaxation (35~45mm). At the same time, in order to ensure that the front and rear of the wheel are in a straight line, the scale plates on the left and right sides are adjusted to the same position of the scale mark on the rear flat fork.
●The transmission chain of this motocycle is refined with special raw materials. It is highly recommended to use our oil seal chain for the replacement of transmission chains. If the strength or quality of other transmission chains is too low, the chain may break and the vehicle may be damaged or people may be injured. After the oil seal chain is worn and stretched to the service life, it cannot be removed for one or two sections and then riveted, which seriously exceeds the fatigue life of the chain, and the chain may be damaged or injured if the chain is broken.
●The rear flat fork wear block fails, the chain moving at high speed will not only cut and damage the rear flat fork, but also the chain will be damaged at the same time, and the rear flat fork or chain break may damage the vehicle or injure the personnel.

Braking system

Attention：

●The arrangement of the brake hose on the vehicle is detailed in the distribution diagram of the brake system accessories in the "Vehicle Information" chapter of this manual.

Remark:

In order to facilitate after-sales tracking, all those who need to purchase brake hoses, disc brake calipers and disc brake main cylinders, and hydraulic control units need to be reviewed by our company before purchasing. Domestic customers can only purchase after filling in the frame code and engine on the official website.

●Brembo calipers can be found in this section, and the following is a demonstration of the J.JUAN calipers.

J.JUAN Diagram of braking system components：

Brembo Diagram of braking system components：

Attention:

●This inspection should be handed over to a qualified maintenance unit to complete.

●Regularly check whether the liquid level of the brake fluid is 3/4 of the way through the observation window.

●If brake fluid is swallowed, contact a poison control center or hospital immediately; In case of accidental contact with eyes, rinse with water and seek medical attention immediately.

●Keep brake fluid away from children and pets.

●It is strictly forbidden to flush the main pump directly with high-pressure water.

1. Check the brake components

a. Check whether the liquid level of the front disc brake main pump and the rear disc brake main pump is above the "LOWER" line. Check the oil pipe joints for brake fluid leakage. Observe the color of the brake fluid, the normal should be light yellow, if the color becomes darker, it is recommended to replace the brake fluid.

b. Park the vehicle on flat ground or lifting platform and put down the main bracket. Check the tubing joints of the main pump, ABS hydraulic control unit and caliper for brake fluid leakage. If the brake fluid level in any of the tanks falls below the lower limit level mark, or if the free travel of the brake handle and pedal exceeds the standard, the brake pad wear must be checked. If the brake pads are barely worn, there may be a leak. Please hand it over to the Zontes special repair shop for maintenance. With the help of an endoscope with LEDs, it is easy to inspect the tubing joints of the ABS hydraulic control unit and the main pump, or to remove the corresponding cover for inspection.

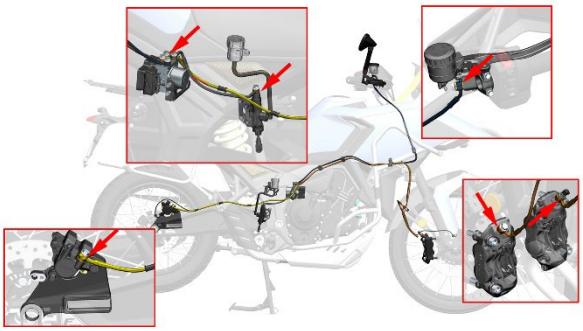

c. Measure the thickness of the front and rear brake discs, if it is less than 4.0mm, it needs to be replaced. Suspend the front wheels in the air and rotate the front wheels by hand to observe whether there is obvious damage on the surface, such as pits, deep scratches, grooves, etc., if any, it is recommended to replace them. Feel with your hand if there is a noticeable sound of grinding the brake disc when turning the front wheel. Observe whether the brake disc swings when turning the front wheel from the front; If there is oscillation, it needs to be removed according to the steps of removing the brake disc, placed on the standard platform, measured with a dial gauge or checked with a feeler gauge to check the gap between the brake disc and the standard platform; If the > is 0.08mm, a new brake disc will need to be replaced. Check the rear brake disc in the same way.

WARNING

●Check the brake disc before operating the brake disc until it has cooled down.

●It is forbidden to reduce the temperature of the brake disc by spraying water, which may cause the brake disc to deform and produce abnormal noise.

●If you use a brake disc lock, check whether it has been removed before driving the vehicle.

●The sediment attached to the brake disc should be cleaned diligently.

d. Check the brake caliper bolts

Check the M10×1.5×60 fixing bolt of the left front and right front disc brake calipers with an 8# Allen socket and torque wrench, the standard torque of the bolt is 45±5N.m (4.6±0.5 kgf.m, 33±4 lbf.ft).

e. Check brake pad wear from the front. If it is almost worn to the substrate position, it is necessary to replace the brake pads with new ones in pairs.

J.JUAN brake pads

f. Check the rear caliper brake pad wear from the rear. If it is close to wear to the base plate, it is necessary to replace the brake pads with new ones in pairs.

J.JUAN brake pads

DANGER

●Brake pads should be inspected and maintained regularly by a qualified service unit.

●Do not drive immediately after replacing the brake disc or brake pad with a new one. Be sure to grasp and release the brake handle or pedal a few times to allow the brake disc and pads to fit well and restore normal grip and allow the brake fluid to circulate steadily.

●After replacing the brake disc or brake pad, the braking distance may be longer than the original braking distance, and it needs to be used for about 300 kilometers (200 miles), and the best braking effect can be achieved after the brake disc and brake pad are fully run-in. Before fully running-in, it is necessary to leave enough braking distance to ensure driving safety.

WARNING

●The brake pads must be replaced in pairs, and replacing only one side will cause the brake to be uneven.

● If the brake pad is not in the right position, it is forbidden to operate the brake handle or pedal. Failure to do so will make it difficult for the piston to return and may result in brake fluid leakage.

2. Check the front and rear brake switches

2.1 Check the brake switch

Hold the brake handle of the front main cylinder and press the pedal rocker arm of the rear brake main cylinder to observe whether the rear brake light is on. If it is not lit, it is necessary to check: whether the brake switch is faulty; whether the rear brake light is faulty; whether the fuse has been blown or not; whether the line is open.

2.2 Replace the brake switch

Front brake switch：

a. Pull out the two plugs of the front brake switch in the direction of the arrow, without distinguishing between the positive and negative poles.

b. Remove the two bolts with the T7 inner torx wrench and remove the front brake switch.

c. Replace the new switch, pay attention to aligning the limit hole between the switch boss and the brake main cylinder. Standard torque: 1～1.5 N.m.

Rear brake switch:

Remove the seat cushion, the right decorative cover of the fuel tank, and the right cover of the main frame, and unplug the plug on the switch.

a. Rotate the nut on the rear brake switch to the switch head, and disassemble the spring from the rear brake switch.

b. Replace the switch with a new one. In order to prevent non-touching, the switch modulation spring is hooked just in place by adjusting the nut, and the adjusting nut can be rotated down half a turn.

Check that the brake light switch is working properly. If the switch reacts too slowly, hold the brake light switch and rotate the adjustment nut in a counterclockwise direction, and if the switch responds too quickly, rotate the adjustment nut in a clockwise direction.

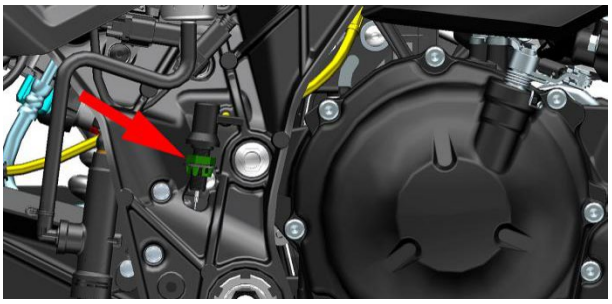

3. Lubricate the brake handle and brake pedal moving parts

3.1 Lubricate the front brake handle

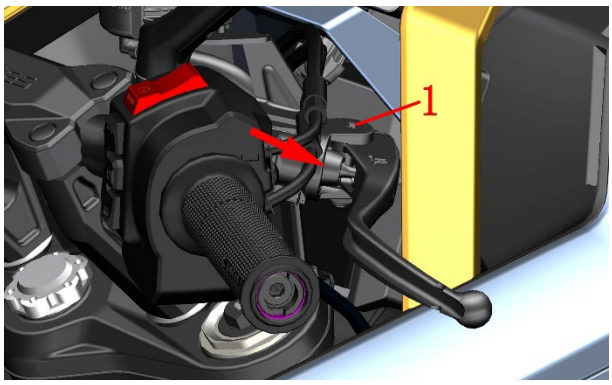

a. Remove the handle cover first.

b. After grasping the handle, use the 5# hexagon counterclockwise rotation to remove the bolt (1); Remove the brake lever.

c. Wipe the handle pusher head and the outer end of the piston (the position shown in the arrow) with a clean non-woven fabric, and evenly apply high vacuum silicone grease.

d. Wipe the bolts clean (1) and evenly apply high vacuum silicone grease.

e. Reloading.

3.2 Lubricate the rear brake pedal

a. Remove the bolts on the brake pedal with an 8# sleeve and remove the brake pedal. Standard torque: 12±1.5 N.m.

b. Break the buckle pointed to by the arrow, then release the two springs on the pedal spline rocker arm and remove the pedal spline rocker arm.

c. Wipe the grooves (the locations shown in the circles in the figure) with a clean non-woven fabric and apply the lubricating grease evenly.

d. Reloading.

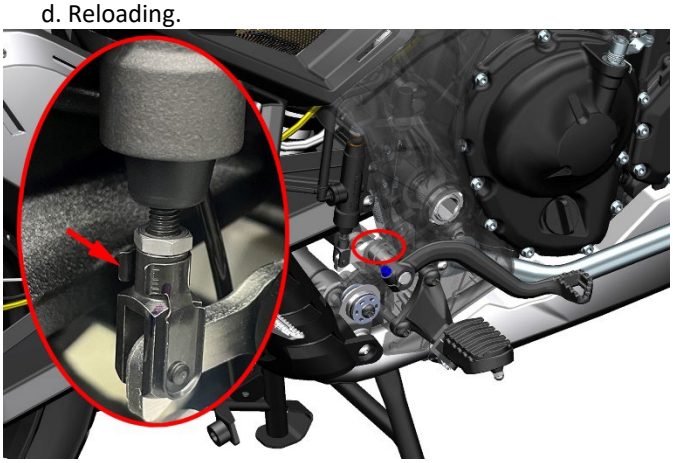

3.3 Replace the brake lever and brake pedal

Brake handle: The brake handle can be removed by removing the bolt (1) and nut (2) according to "Lubricated brake handle".

Brake pedal: Refer to "Lubricated rear brake pedal" and replace the brake pedal after removing it.

4. Adjust the brake lever and brake pedal

Brake Handle:

In order to adapt to the wider range of drivers driving the model, it is equipped with a brake lever that can be adjusted. Rotate and adjust the twist in the direction of the arrow, the distance between the handle and the handle rubber sleeve will be larger, otherwise it will be reduced.

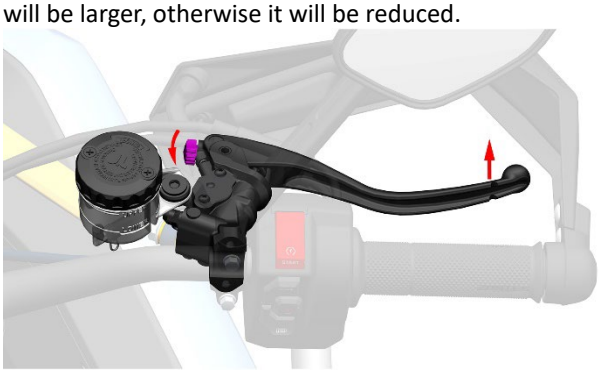

Brake pedal:

Fine-tuning: Use a 10# open-end wrench to adjust the nut on the main cylinder of the rear brake and adjust the brake pedal.

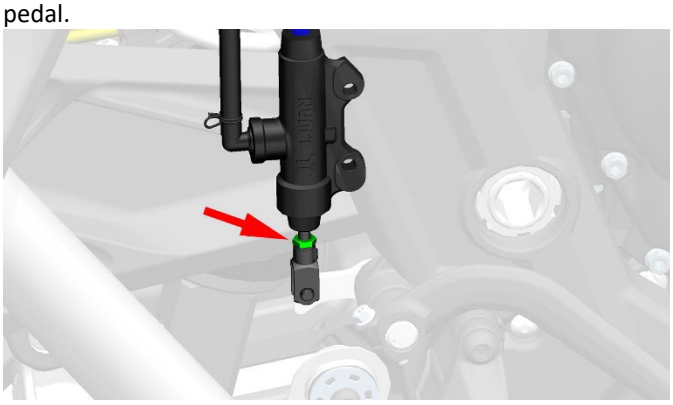

Big adjustment: Loosen the bolt on the brake pedal, adjust the brake pedal to the angle that the driver is comfortable with, and then tighten the bolt.

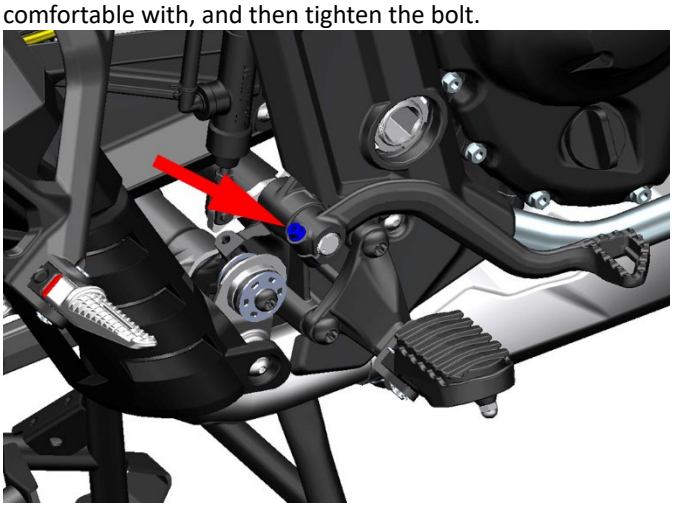

5. Replace the brake pads

DANGER

●Brake pads should be inspected and maintained regularly by a qualified service unit.

●Do not drive immediately after replacing the brake pads with new ones. Be sure to grasp and release the brake handle a few times to allow the brake discs and pads to fit well and restore normal grip and allow the brake fluid to circulate steadily.

●After replacing the new brake pads, the braking distance may be longer than the original braking distance, and it takes about 300 kilometers (200 miles) to achieve the best braking effect after the brake disc and brake pads are fully run-in. Before fully running-in, it is necessary to leave enough braking distance to ensure driving safety.

WARNING

●The brake pads must be replaced in pairs, and replacing only one side will cause the brake to be uneven.

● Brake pads must be properly assembled.

● Do not operate the brake handle after removing the brake pads.

5.1 Replace the front brake pads

The disassembly and assembly methods of the front left radiation caliper and the front right radiation caliper are the same, and the front right radiation caliper is an example.

a. Pull out the circlip ① with needle-nose pliers and remove the two circlips.

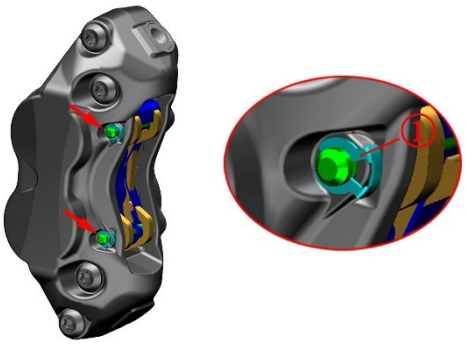

b. Use a T25 hexagon torx wrench to remove the upper pin ② and then remove the lower pin in turn.

c. Remove the shrapnel ③ and remove the brake pad ①.

d. Clean the dust and other foreign objects on the outer edge of the piston and the pin shaft.

e. Use a Phillips screwdriver to remove the bolts on the front disc brake main pump assembly, remove the upper cover, and pay attention to protect the rubber sleeve of the upper cover.

f. Push the piston in the direction of the arrow to the end.

g. Restore the front disc brake main pump assembly, and be sure to accurately assemble it in place.

h. Install the two brake pads ① back into the caliper, and the shrapnel ③ into the middle of the two brake pads. The direction of the arrow in the shrapnel should be upwards when assembling.

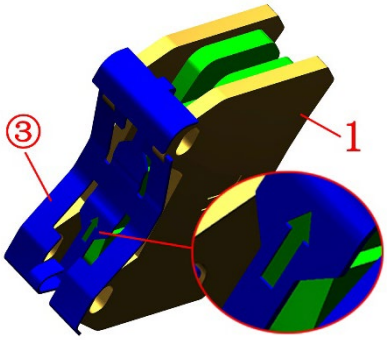

i. hold down the piece at the point of arrow ⑤ to the direction of the arrow with your hand, and fix the brake pad ① with the pin ② inserted into the hole. Tighten the pin ② with a T25 hexagon torx wrench. Standard torque is 17 N.m.

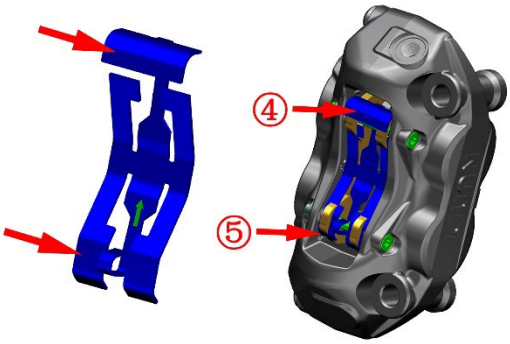

J. hold down the piece at the point of the arrow ④ to the direction of the arrow with the hand, and insert the pin ② into the hole position to fix the brake pad (1). Tighten the pin ② with a T25 hexagon torx wrench. Standard torque is 17 N.m.

k. Attach the two circlips ① back to the pin shaft. The snap snaps and fits into place. When assembling the circlip, it is necessary to pay attention to the flange should be facing outward, and if the circlip is deformed, it can be corrected with appropriate force with a hammer.

l. Hold the brake lever repeatedly until braking force is restored.

5.2 Replace the rear brake pads

a. Pull out the circlip ① with needle-nose pliers and remove the circlip. Use a T25 Torx wrench to remove the bolt ②. Remove the two disc brake pads.

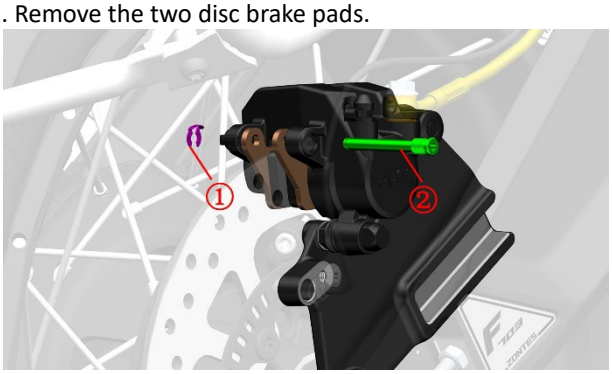

b. With the help of a tool, push the piston in the direction of the arrow to the end. If the resistance is very large, you can refer to the method of adding brake fluid to the front brake main cylinder, remove the upper cover and then push it. If the spring blade on the caliper falls off, it needs to be replaced in the direction shown.

c. Grasp the outer brake pad with the left hand, insert the pin ② with the right hand, and be careful not to insert it to the end. After the inner brake pad is put in place, insert the pin shaft to the end and lock the pin ② with a T25 torx wrench, and replace the circlip ① with needle-nose pliers. Note that the side with grooves is facing the brake disc; The black metal back panel faces the calipers. Standard torque is 17 N.m.

J.JUAN brake pads

d. Repeatedly pinch and release the brake handle to check whether the brake returns to normal hydraulic resistance.

5.3 Brake pads rattle

The main reasons for the abnormal noise of brake pads are as follows:

a. The brake pads are worn to the limit, if the brake pads are new, check whether there are foreign objects caught between the brake disc and the brake pads. It can be restored after replacing the brake pads with new ones or removing foreign objects.

b. Use non-original brake pads with too high hardness, and replace them with original parts.

c. The brake disc bolt is loose, and the fastening bolt can be restored to normal.

d. Failure of the braking system, such as rust of the sliding shaft of the caliper, which causes it not to reset, and the brake pads and spring pads are not installed correctly. Rust removal or reassembly correctly.

e. The run out of the brake disc is out of tolerance, and the new brake disc can be restored to normal.

6. Replace the brake disc

DANGER

●The vehicle must be parked on a level, stable ground or lifting platform.
●After replacing the brake disc and brake pad or reassembling the front and rear wheels, the brake handle should be operated repeatedly until the brake restores the braking effect.
●Soiled disc brake discs and disc brake pads will reduce the braking effect, please replace the disc brake pads with new ones and clean the contaminated brake discs.

WARNING

●Do not operate the brake handle after the brake disc or rim assembly is removed.
●The runout ≤ 0.08mm（0.003 in） of the new brake disc should be checked before assembly.

6.1 Replace the front brake disc

The front brake disc can be removed by referring to the steps described in this manual "Fork Assembly" to remove the front wheel assembly.

6.2 Replace the rear brake disc

The rear wheel assembly can be removed by referring to the description of the steps for removing the rear wheel assembly in this manual, "Fork Assembly".

Brake hoses

Note:
●This inspection should be handed over to a qualified maintenance unit to complete.
●Regularly inspect the brake hose according to the maintenance schedule.

Referring to steps 1 and 2 of the braking system to check the brake fittings, the oil pipe joints of the ABS hydraulic control unit and the main pump can be easily checked with the help of an endoscope with LEDs, or the corresponding covers can be removed for inspection.

Brake fluid

Note:
●This inspection should be handed over to a qualified maintenance unit to complete.
●It is strictly forbidden to flush the main pump directly with high-pressure water.
●After disassembly, make sure that all parts are properly replaced.
●It is strictly forbidden to mix with water, dust, impurities and silicic acid or petroleum liquids, otherwise it will cause serious damage to the braking system.
●This vehicle uses DOT 4 brake fluid, and it is forbidden to mix it with other brake fluids.
●Wear protective gloves/protective clothing/protective eye shield/protective mask.
●The brake fluid must be used in time after opening, and it must be sealed and moisture-proof when stored; It is recommended not to exceed 1 month. Inferior or damp brake fluid can adversely affect the braking system, which can lead to brake failure if the impact is severe.
●Brake fluid should be avoided from dripping onto the paint surface of the covering parts or the surface of the parts, and if accidentally splashed, rinse with water immediately.

DANGER

●If brake fluid is swallowed by mistake, contact a poison control center or hospital immediately; In case of accidental contact with eyes, rinse with water and seek medical attention immediately.
● Keep brake fluid away from children and pets.
● The vehicle must be parked on a level, stable ground or lifting platform.

1. Brake fluid is added to the front and rear disc brake main cylinders

1.1 Add front brake master cylinder brake fluid

a. Place the vehicle.

b. Wrap the main pump around with oil-resistant plastic film to prevent brake fluid from dripping onto the surface of the parts and damaging the paint layer.

c. Remove the two bolts with a Phillips screwdriver and remove the upper cover. Be careful not to lose the sealant sleeve. Standard torque is 1.5～2 N.m.

d. Use the brake fluid moisture content tester to measure the water content, if it is > 2%, all brake fluid needs to be replaced; If 2% is ≤, add freshly opened DOT 4 brake fluid to 3/4 of the clear viewing window of the front disc brake main cylinder. It is recommended that the water content should be less than 1.5%. TOTAL Total HBF 4 (DOT 4) brake fluid 0.22L (0.23 US qt, 0.19 Imp qt, 0.06 US gal, 0.05 Imp gal) is added to the factory.

The picture above shows the brake fluid moisture content tester, the picture comes from the Internet, and the copyright belongs to the author of the original picture. Do not use for any other purpose.

e. Clean up the foreign matter before reassembling.

1.2 Add rear brake master cylinder brake fluid

a. Remove the seat cushion and the right cover as shown in the picture.

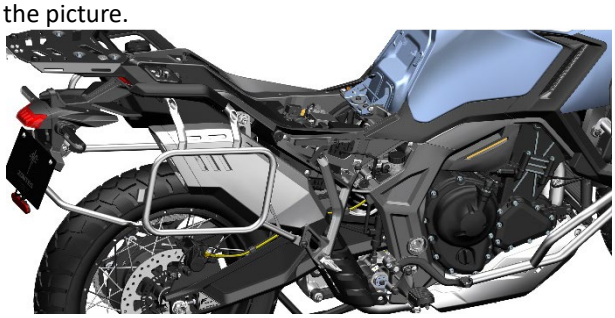

b. Remove the expansion nail with a Phillips screwdriver and pull out the main pump. Wrap the main cylinder around the main cylinder with an oil-resistant plastic film to prevent brake fluid from dripping onto the surface of the parts and damaging the paint layer.

c. Unscrew the upper cover of the main pump counterclockwise and take out the rubber sleeve inside. Add the right amount of brake fluid.

2. Change the brake fluid

Follow the steps on the previous page to add brake fluid, and if the measured water content is > 2%, the brake fluid needs to be replaced. This test should be done every 5,000 kilometers (3,106 miles) or every 12 months. It is recommended to replace the brakes fluid every two years. If the brake fluid is not replaced for a long time, it will form flocculent materials to block the oil pipe, the oil hole of the disc brake main cylinder or the piston to stagnate, resulting in poor braking effect or failure, and then affecting driving safety.

2.1 Replace the front brake fluid

a. Wrap the front brake around the main pump with oil-resistant plastic film.

b. Take the front right caliper as an example. Pull out the rubber cap ① of the air defer nozzle and put on the 8# plum wrench. Slip a 6mm (0.23 in) hose into the vent nozzle ②, being careful not to remove the torx wrench.

c. Put the other end of the hose into the oil can.

d. Refer to the steps to add brake fluid to remove the upper cover of the front brake main cylinder.

e. Turn the 8# torx wrench counterclockwise with your right hand to release the air vent, and pinch the front brake handle with your left hand slowly and at a constant speed to the end and keep it still. Lock the deflation valve clockwise and slowly release the handle.**Pay close attention to the fluid level of the front brake main cylinder, and add it in time when it is too low to avoid air bubbles entering the brake hose.**Repeat the previous steps until clear, clean, light yellow brake fluid comes out.

f. Observe whether the liquid level height of the main pump is at 3/4 of the transparent inspection place, if it is no longer necessary to add or use a syringe to draw out or discharge.

g. Unplug the 6mm (0.23 in) hose after the brake fluid is replaced; Use a torque wrench to tighten the bleed nozzle to the standard torque. The braking torque of the J.JUAN braking system is 9±1.5 N.m; that of the Brembo braking system is 12.5±1.5 N.m After that, the rubber cap is back to the venting nozzle.

h. Replace the old brake fluid in the front left caliper in the same way. **Pay close attention to the fluid level in the front brake main pump.**

i. Replace the upper cover of the main pump.

j. Repeatedly pinch and place the brake handle to check whether the braking returns to normal hydraulic resistance.

⚠WARNING

●The discharged brake fluid should be properly disposed of and no further use should be prohibited. It is forbidden to pollute the environment by dumping at will; or feel free to place, etc. It should be handed over to a qualified recycling unit for proper disposal.

●The steps of discharging the brake fluid must be strictly implemented and must not be disordered; Avoid air bubbles from entering the brake line.

●When pinching and placing the brake handle, it must be slow and uniform to avoid air bubbles entering the brake line.

●The brake handle can only be released after the air release valve is locked in place, and semi-locking is prohibited; And don't overexert yourself.

2.2 Replace the rear brake fluid

Refer to the previous steps to add the brake fluid of the rear brake main cylinder and remove the upper cover and sealant sleeve of the rear brake main cylinder.

Refer to the method of the front right caliper, and change the brake fluid in the rear brake caliper.

3. Brake system exhaust

If the brake handle is soft and the braking performance is significantly reduced, you should first check whether the brake fluid level of the main cylinder is lower than the "LOW" line and whether the braking system is leaking. If the problem persists after excluding the above two items, you can try venting the operation. The exhaust operation is similar to that of changing the brake fluid at the front. Changing the brake fluid requires a steady flow of clean, transparent light yellow brake fluid, and a foamy brake fluid during the exhaust operation.

After the exhaust is completed, it is necessary to check whether the brake fluid level of the main cylinder meets the standard.

WARNING

●The discharged brake fluid should be properly disposed of and no further use should be prohibited. It is forbidden to pollute the environment by dumping at will; or feel free to place, etc. It should be handed over to a qualified recycling unit for proper disposal.
●During operation, it is necessary to pay close attention to the liquid level height in the main pump, and it is necessary to replenish it in time to avoid air entering the brake hose.

Rims and tires

DANGER

●Check the condition and pressure of your tires before driving.
●When the tire is worn to the limit or there are cracks and wounds on the surface, it should be replaced in time.
●When using new tires, you need to pay special attention to driving safety, and new tires that are not run in well may slip and cause the vehicle to lose control.
●Avoid sudden acceleration, sharp turns, and emergency braking within 150 kilometers (100 miles) after replacing new tires.
●The high-seat version is equipped with 90/90-21 front wheels and 150/70R18 rear tires as standard. The low-seat version comes standard with 120/70R19 wheels at the front and 170/60R17 at the rear. When changing tires, you should change to standard tires, and problems may occur when using non-standard tires.
●It is not recommended to repair the tire by external repair, and the tire needs to be disassembled for internal repair. Temporary emergency can be used external compensation, but the speed should be reduced, and as soon as possible to the maintenance unit for internal compensation. If there are bumps, punctures, scratches on the sidewall, and large holes in the tread damage, it should be replaced directly. After repairing the tire, the dynamic balance should be re-done.
●Do not install an inner tube inside the tubeless tires of this motorcycle. Too much heat can cause the inner tube to burst. This motorcycle can only be used on tubeless tires. Rims are designed to use tubeless tires, and when accelerating or braking hard, the tires with inner tubes can slide on the rims, causing rapid air bleats.
●In order to ensure the safe operation of the motorcycle, it is necessary to ensure that the wheels are absolutely round and the spoke tension is appropriate. Loose spokes and wheel out-of-rounding can cause instability at high speeds and may cause loss of control of the vehicle.

The wheels do not need to be removed to perform the maintenance work recommended in the maintenance schedule.

1. Check the rim and spokes for damage.
2. Tighten the loose spokes according to the standard torque; It is recommended to be handled by a special repair shop of Zontes.
3. Rotate the wheel slowly to see if it "wobbles". If it is found to be wobbly, the rim is not round or "absolutely" round. If the shaking is obvious, please hand it over to the Zontes special maintenance shop for maintenance.

WARNING

●Check the tire pressure regularly, the standard is 250kPa (2.55 kgf/cm^2, 36 PSI) at normal temperature for the front and rear wheels; The maximum tire pressure must not be greater than 290 kPa (2.96 kgf/cm^2,42 PSI) in the cold state.
●When the tire pressure drops, check whether the tire has nails and small holes; Whether there is a collision on the side of the rim that has caused deformation or cracks.
●When using a tire scraper to remove a tire, be careful to avoid the valve position. Pay attention to protect the contact area between the rim and the tire lip, if it is scratched, it may cause air leakage.
●If the tire pressure is too high, the contact area with the ground is reduced, and it is easy to slip and lose control, and it is also more likely to cause a puncture in summer. Too low can lead to steering difficulties, accelerated wear and increased engine load and increased fuel consumption.
●Frequent exposure to the sun will cause tire cracking and aging, so it is recommended to park the vehicle in a dustproof, sunscreen and ventilated place; Or cover the motocycle to protect the body parts, but also better protect the tires. If you do not drive for a long time, you should support the vehicle firmly and let the tires hang in the air to avoid deformation caused by long-term load in contact with the ground.
●It should not be used because tire self-replenishment may block the air hole of the tire pressure monitoring sensor, causing difficulty in inflation or tire pressure monitoring failure.

1. Check the tires

Check your tires and check your tire pressure using an air pressure gauge before each unpaved ride and when you return from your unpaved ride. If you're only riding on the road, check the pressure at least once a month or when you notice a lack of tire pressure. Check the tire pressure while the tires are cooling.

a. Park the vehicle on a flat and stable ground or lifting platform and put the main bracket down. Inspect the tire for cuts, cracks, exposed fabric or tire lines, or nails or other foreign objects embedded in the side or tread of the tire. Also check the sidewall of the tire for any abnormal bulges or bulges.

b. Prop up the front wheel with a suitable tool, let the front tire float in the air, and then turn the tire to carefully check whether there is any abnormality, such as eccentric grinding, nails, cracks, etc. Clean up small stones or other foreign objects embedded in the tread. Check whether the tread and sidewall have been worn to the mark, if it is close to or has been worn to the mark, it should be replaced with a new tire of the same specification in time. Use the tire pressure gauge to measure the tire pressure when the tire is cold, and replenish or deflate to the standard value.

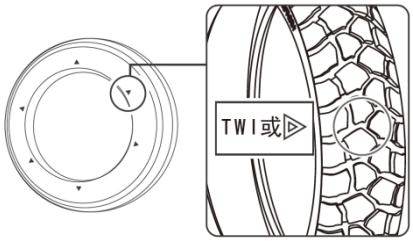

The sidewall triangle (△T.W.I.) markings indicate the position of the wear strips. If it is worn to the marked point, it means that it has been worn to the limit, and it will be a safety hazard to continue driving, and it must be replaced with new tires of the same specification.

c. The rear tire inspection is consistent with the front tire and will not be repeated here.

2. Replace the tires

a. Replace the front tire

The front wheel assembly can be removed by referring to the step-by-step description of removing the front wheel assembly in this manual "Front Fork Assembly". Use a tire scraper to remove the tire, pay attention to avoid the valve position when disassembling, and never use a crowbar to pry the tire at the valve position to avoid damaging the tire pressure sensor. Before press-fitting the tire, it should be installed according to the direction of rotation indicated on the sidewall, and the yellow marked tap should be aligned with the valve position. After replacing the new tires or repairing the tires, you need to rebalance the dynamic to avoid the front wheel shaking caused by imbalance affecting the driving experience.

b. Replace the rear tire

The rear wheel assembly can be removed by referring to the description of the steps for removing the rear wheel assembly in this manual, "Fork Assembly". Other operations are similar to changing the front tire and will not be repeated here.

Steering mechanism

Attention:

●Regularly inspect the steering mechanism according to the requirements of the regular maintenance schedule.

●Park the vehicle on a flat and stable ground or lifting platform and put the main bracket down.

●Too little clearance of the steering mechanism will lead to inflexible steering and accelerate bearing wear. If it is too large, it will cause driving shaking, and there will be abnormal noise when braking.

1. Check the steering mechanism

a. Support the front wheels with appropriate tools, allow the front tyres to hang freely in the air, turn the handlebars left and right, and check if the rotation is smooth and flexible, and if the cables are taut.

b. Keep the front wheel suspended, wiggle the front wheel assembly in various directions – front and back, left and right – and verify if the fork assembly is properly aligned or if there is any radial play.

2. Adjust the steering mechanism

If the steering is not flexible or loose, the axial bearing clearance should be adjusted.

After hitting the direction handle to a suitable position, use the 38# sleeve to remove the nut on the coupling plate in the counterclockwise direction and remove the gasket. Use 6# hexagon to loosen the bolts on both sides of the lower upper plate. Pull out the steering handlebars and the upper panel assembly upwards. If it is difficult to pull out, you can use a flathead screwdriver to groove the upper plate and pry it open slightly, and then pull it out at the same time. Move the orientation handlebars and the upper plate assembly out of the way. Standard torque is 25±3 N.m.

b. Other parts are hidden here for ease of explanation. Move the washer (1) up first, and then loosen the adjusting nut (2a).

c. If the steering is heavy, loosen the adjusting nut (2b) anticlockwise. Tighten clockwise to 35 N.m (3.6 kgf.m, 26 lbf.ft), then 1/4 turn anticlockwise, then 13 N.m (1.3 kgf.m, 10 lbf.ft).

d. If there is looseness, screw it directly clockwise to 35N.m (3.6 kgf.m, 26 lbf.ft), then loosen it anticlockwise 1/4 turn, and then tighten it to 13N.m (1.3 kgf.m, 10 lbf.ft).

e. After adjustment, confirm whether the steering is restored, if it returns to normal, rotate the nut (2a) clockwise, and align the anti-loosening washer (1) with the grooves of the nut (2a) and (2b) after touching the rubber gasket (3).

f. Assemble the components back in the opposite direction.

g. The front wheel is suspended in the air, and the steering handle is straightened, and the steering mechanism is smooth and free of stagnation by gently pushing and pulling the direction with your hand. The fork assembly should be able to slowly deflect to the bottom under its own weight when slightly tilted to one side, and readjust if it is fast to the end.

3. Maintain steering bearings

If the clearance of the steering bearing cannot be restored by adjusting the steering bearing, the steering bearing needs to be removed and checked for wear or rust of the bearing and housing ring, lack of grease, etc.

Refer to the steps for replacing the lower plate in this manual "Fork Assembly", which will not be repeated.

4. Fault

If you feel more strenuous to turn the handlebar normally, you need to investigate the following reasons:

a. Whether the steering mechanism is too tight, refer to the previous steps to adjust the steering mechanism to solve;

b. The bearing of the steering mechanism is rusty, the seat ring or the steel ball is damaged, and it needs to be disassembled and replaced;

c. If the front tire pressure is insufficient, it needs to be charged to the standard tire pressure, which is 250kPa (2.55 kgf/cm2, 36 PSI) at room temperature;

d. The lower plate column is deformed and needs to be removed and replaced.

Front shock absorber

Attention：

●Every 10,000 km (6,200 miles) and 20,000 km (12,400 miles) or every 12 months, the fork should be checked for leakage or deformation and bending, and whether the shock absorption rebound is normal.

●Before each ride, check whether there is leakage in the front shock absorber and whether the fasteners are loose to ensure driving safety.

●Bolt torque at the hollow shaft of the front wheel of the shock absorber bottom barrel: 20N.m (2.0 kgf.m, 15 lbf. ft).

●Replace the hydraulic oil should use kerosene or diesel to thoroughly clean all parts, use a graduated cylinder to measure hydraulic oil and pour it at one time, to avoid mixing different hydraulic oils.440ml(14.8 US oz， 15.4 lmp oz, 26.8 cu-in). For the 2024 and 2026 models with 19-inch wheels, 7.5W is recommended; for the 2026 model with 21-inch wheels, the recommended kinematic viscosity of the oil is 32.

●After passing on dusty or muddy roads, the foreign objects on the fork pipe (exposed chrome section cylinder) should be cleaned up in time to avoid scratching the dust or oil seal causing leakage; Can be wiped clean with a soft cloth.

● Do not use a high-pressure water gun to flush directly against the dust seal at close range.

●If the vehicle is not driven for a long time, it should be parked in a ventilated and dry environment, as the dark and humid environment will easily cause rust on the fork pipe and rust other parts on the vehicle. Coastal areas should be dampened more frequently before maintenance than inland areas. After wiping it clean, you can spray a small amount of anti-rust oil to prevent rust.

1. Check the appearance

a. After the vehicle is parked firmly, let the front wheels hang in the air, and rotate the direction to observe whether there is leakage in the front shock absorber, and whether there are scratches, pits, rust on the surface of the fork tube. Shallow scratches, small pits, and slight rust can be smoothed with fine sandpaper of about 2000 mesh. Wipe off dust or foreign objects from the dust seal. If there is a dust jacket, remove it before checking.

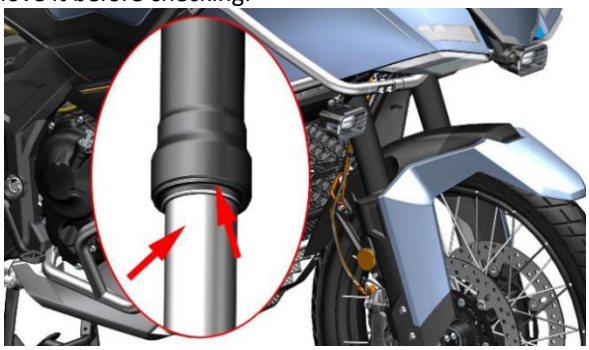

b. Check whether the bottom barrel is peeling off the paint, and whether the mounting points of the front fender, front wheel hollow shaft and front brake caliper are broken or cracked. Check the bottom of the bottom barrel for leaks.

c. If a large amount of hydraulic oil is attached to the fork tube, wipe it clean before riding observation. If there is no oil stain or slight oil stain, it is the hydraulic oil accumulated during the assembly of the dust seal, and it can be judged that the oil seal is not leaking. If a small amount of oil stains or sludge mixture is attached, wipe the surface of the fork tube and oil seal after removing the dust seal, compress it once, absorb the shock before wiping it clean, and then press it; Repeat 10 times. Observe whether there is still on the fork tube, if there is, the front shock absorber oil leakage needs to replace the dust seal and oil seal, if not, a small amount of hydraulic oil accumulated during assembly is normal.

d. Check whether there is leakage at the bottom of the bottom cylinder with the help of a mirror or mobile phone lens, if there is a slight leakage, check whether the bolt is loose, where the bolt torque is 20~26N.m (2~2.7 kgf.m, 15~19 lbf.ft). If there is still leakage after tightening, the gasket should be replaced.

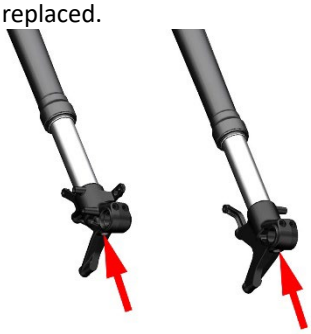

2. Check the shock absorption performance

Pinch the front brake handle and press down hard in the direction of the handle, after letting go, it should be able to compress smoothly and then return to normal, repeat the operation several times to check. If there is blockage, it is necessary to remove the shock absorber for investigation. If there is a collision with the front wheel or a high-speed hurdle, the shock absorption should be checked for deformation. Check the damping performance according to the maintenance periodic table. It is necessary to prevent the vehicle from rolling over during operation.

3. Adjust the preload

For detailed steps, please refer to the assembly video "ZT703-F Front and Rear Shock Absorption Adjustment Video Tutorial" and the "User Manual" delivered with the vehicle.

4. Shock absorber before disassembly

Remove the front shock by referring to the steps for removing the front shock absorber in this manual "Fork Assembly".

5. Rectify the front fork tube

If the front wheels of the vehicle cross the hurdle at high speed or after the impact, check whether the fork tube is deformed. Take the left shock absorption as an example, use the end face of the front axle of the shock absorbing bottom cylinder and the end face of the front fender installation point to fix the shock absorption; Or remove the fork tube. Use the dial gauge to detect the deformation of the fork tube in the axial direction, and turn the fork tube to measure different positions.

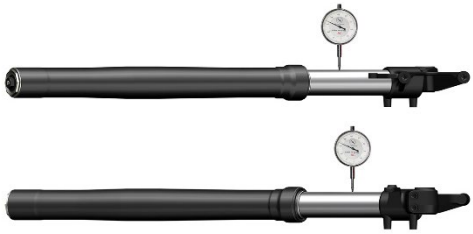

The slight deformation of the deformation < 0.2mm (0.008 in) can be supported by a V-shaped iron block to support the fork tube and place soft rubber or rubber, copper sheet, etc. on the contact surface to prevent the fork tube from scratching, use the press slowly, small pressure and small stroke to straighten it many times, and measure while straightening, and the radial runout should be < 0.05mm (0.002 in) after correction. If the original bending deformation part is out of circle after correction, it should be replaced. If the deformation is too large, the shock absorber should be replaced.

6. Troubleshooting

a. If there is a significant impact sound when driving on uneven roads or when braking urgently, the following items need to be checked:

whether the shock absorber spring is broken and the elastic force is reduced;

whether there is insufficient hydraulic oil or air entering it;

whether there is too much hydraulic fluid;

whether the spring is axially bent and rubs against the fork tube.

b. The following items should be checked if the shock absorption is too hard:

whether there is too much hydraulic fluid;

whether the fork tube is bent and deformed;

whether the springs have been modified.

c. The following items should be checked if the shock absorption is too soft:

whether the hydraulic fluid with low viscosity has been changed;

whether the spring force decreases;

whether there is too little hydraulic fluid.

Rear shock absorber

Attention：

●Every 10,000 km (6,200 miles) or every 12 months, the fork should be checked for leakage and normal shock rebound.

●If there is a lot of sediment attached to the shock absorption, it should be cleaned in time to prevent the soft and large stones from scratching the chrome parts and causing rust.

● Non-professionals should not disassemble the rear shock absorber by themselves.

●It should be maintained according to the regular maintenance table.

1. Check

a. One person straightens and stabilizes the vehicle, and one person presses the rear armrest in the back to observe whether the rear shock absorption can be smoothly recovered.

b. Check whether the shock absorber bolt is loose.

c. Check whether there is leakage at the weld at the bottom of the shock absorption.

2. Adjust the preload

For detailed steps, please refer to the assembly video "ZT703-F Front and Rear Shock Absorption Adjustment Video Tutorial" and the "User Manual" delivered with the vehicle.

3. Replace the rear shock absorber

Remove the rear shock absorber by referring to the "Fork Assembly" in this book.

Bolt/Nut/Fasteners

Attention：

●Regularly check the body fasteners according to the maintenance schedule.

Check the fasteners in the critical areas

Check whether the front disc brake caliper bolts, front shock absorber bottom barrel bolts, upper and lower plate bolts, disc brake disc and sprocket bolts, rear axle nuts and cotter pins, and side bracket stop switch bolts are loose. Check whether the rear axle cotter pin is abnormal. Check whether the retaining rings on both sides of the main bracket are complete.

Side brackets

Attention

●Park the vehicle on a flat, stable ground or lift platform and lower the main bracket.

●When disassembling and installing the spring, it is necessary to prevent personal injury caused by the sudden flying off of the spring.

1. Check

① Parking position ② Driving position

a. Check whether the side bracket spring is damaged and whether the elastic force is normal.

b. Check whether the side bracket rotates normally. Turn to the angle of Figure 1 should be able to automatically turn to the parking space under the spring elastic force; At the angle of Figure 2, it can automatically turn to the parking space. If necessary, the side brackets can be removed for lubrication.

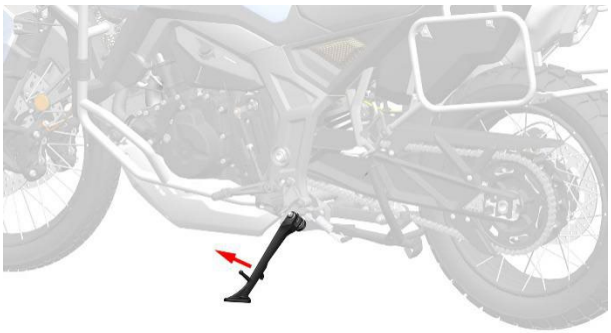

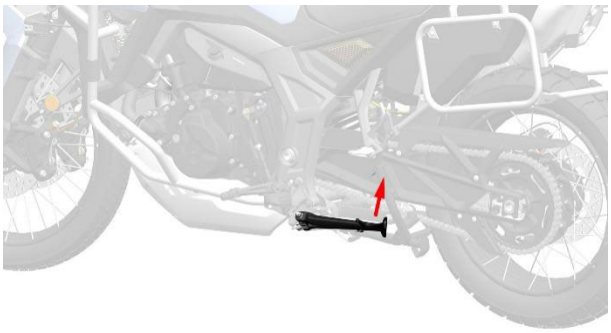

c. Check whether the ignition switch function is normal

Lowering the side bracket (parking position) should not be able to start the vehicle; If the side bracket (driving position) is retracted, the front or rear brake handle should not be able to start the vehicle; After starting the vehicle, the side bracket should be automatically turned off, otherwise the fault of the stop-off switch or brake switch needs to be investigated.

d. Check whether the side bracket mounting plate is deformed or cracked.

2. Lubrication

a. Retract the side bracket so that the spring is in the shortest position for easy removal.

b. The coarse steel wire can be rolled into a circle and sleeved into the spring hook, and it should be noted that the steel wire can not be loosened or spread out during the pulling process.

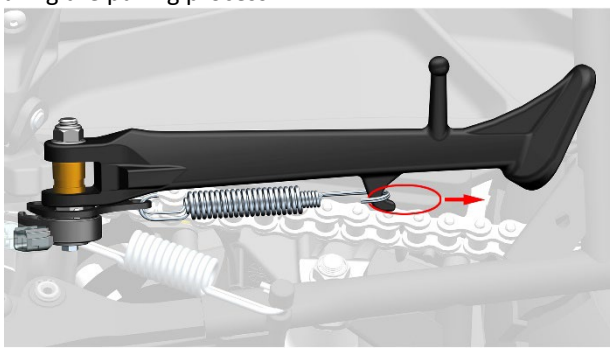

2024 model

c. Grasp the side bracket (8) with one hand, pull the other hand in the direction of the arrow, and remove the spring (9).

d. Put down the side bracket, remove the bolt fixing the ignition switch with an 8# sleeve or torx wrench, and remove the ignition switch, copper pad (3) and side bracket pull hook (4). After grasping the side bracket (8), fix the bolt (5) on the inner side with a 14# open-end wrench, remove the nut (7) counterclockwise with a 14# sleeve on the outer side, remove the bolt (5) and then remove the side bracket (8). Standard torque of nut ⑦: 40±5 N.m.

Remove the side bracket bushing (6) from the foot bracket.

f. Use diesel or kerosene, or a clean rag to wipe off any remaining grease. Apply an appropriate amount of grease to the inner two mounting planes of the side bracket (8) and the outer cylindrical surface of the bushing (6), and try not to apply it to the threaded hole.

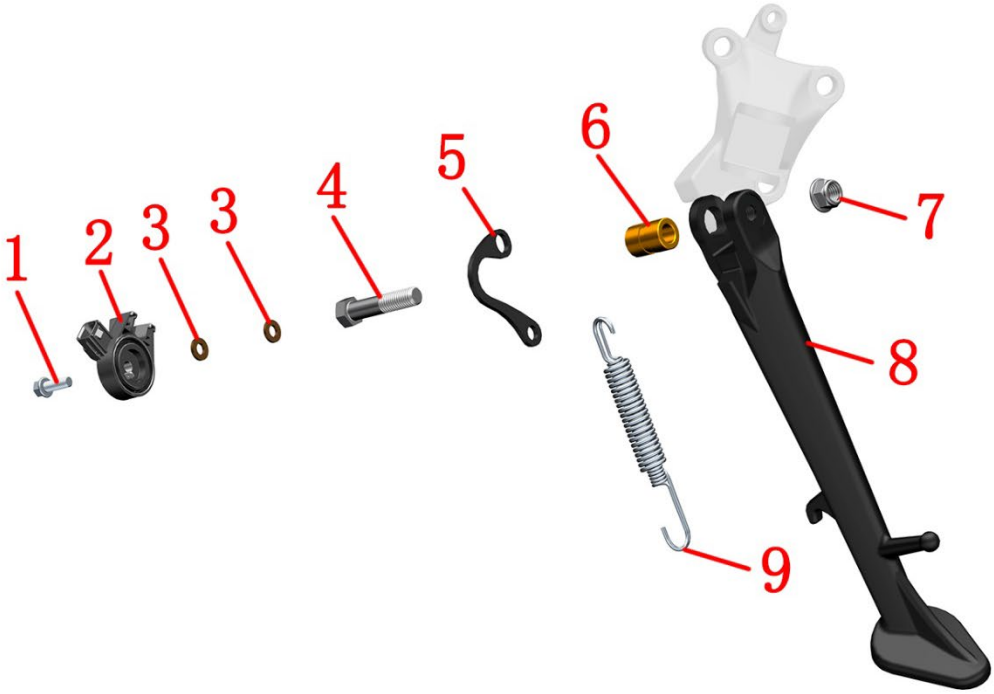

2026 model

c. Hold the side bracket（8）with one hand and pull in the direction of the arrow with the other hand to remove the spring（9）.

d. Lower the side bracket, use a 14# open-end wrench to secure the bolt（1）on the inside, then use a 14# socket wrench to remove the nut（4）counterclockwise on the outside. After removing the bolt（1）, remove the side bracket（8）. If necessary to remove the magnetic steel, use an # Allen wrench to remove the bolt（7）, remove the washer（6）, and then remove the magnetic steel（5）. Standard torque of nut（4）: 40±5 N.m, standard torque for nut（7）: 1～1.5 N.m.

e. Remove the side bracket bushing（2）from the footrest bracket.

f. Use diesel or kerosene, or a clean rag to wipe off the residual grease. Apply an appropriate amount of grease to the two mounting planes on the inside of the side bracket（8）and the outer cylindrical surface of the bushing（2）, and try not to apply it into the threaded holes.

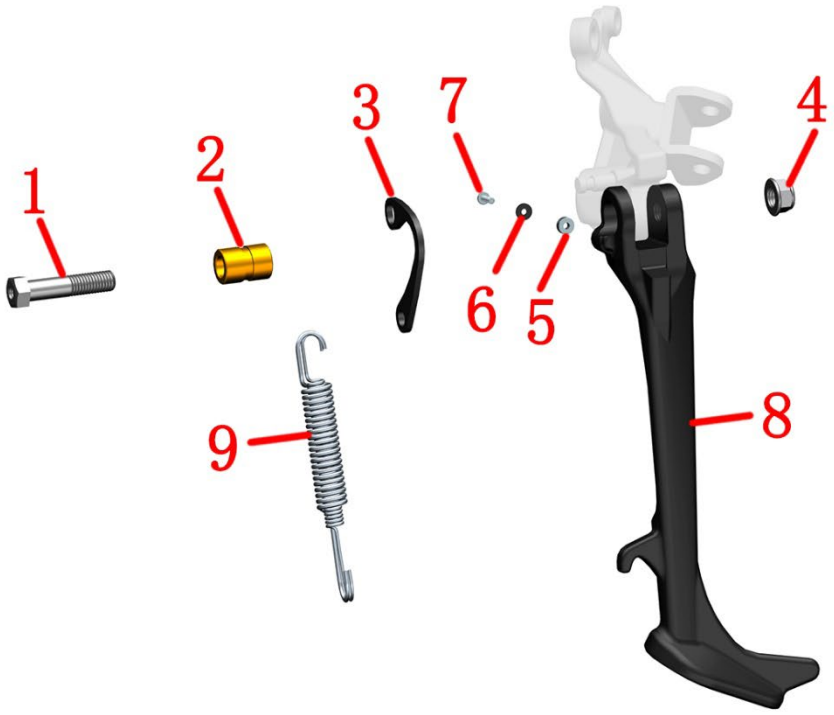

Main bracket

Attention

●Park the vehicle on a flat, stable ground or lift platform with the side brackets down.

●When disassembling and installing the spring, it is necessary to prevent personal injury caused by the sudden flying off of the spring.

1. Check

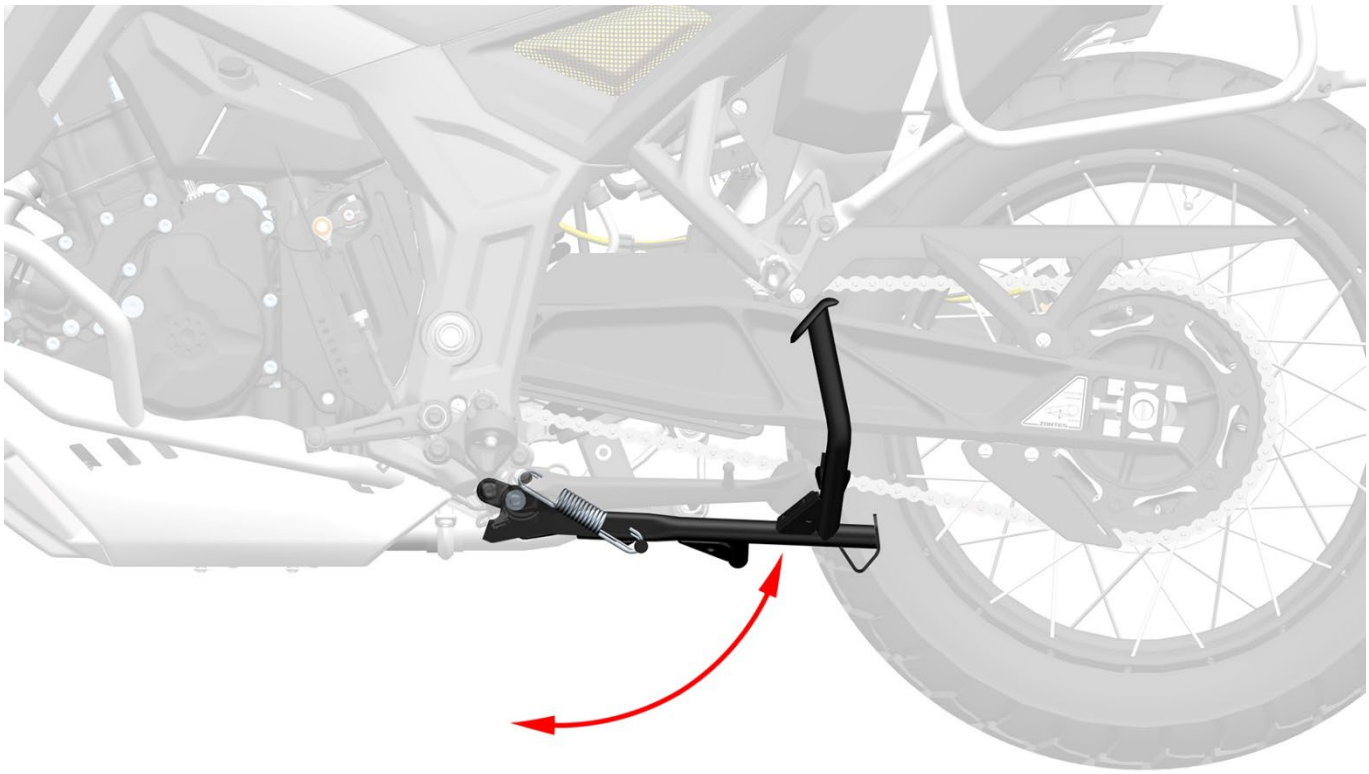

a. Straighten the vehicle, step on the main bracket labor-saving lever with your feet, and check whether the spring elasticity is normal. The main bracket should be able to quickly return to the driving position under the action of the spring's own elastic force.

b. Check whether the buffer adhesive is aging and failing.

c. Check whether the return spring column of the main bracket is deformed.

d. Check whether the main bracket is obviously deformed and whether the welding part is cracked.

e. Check whether the circlips on both sides are missing.

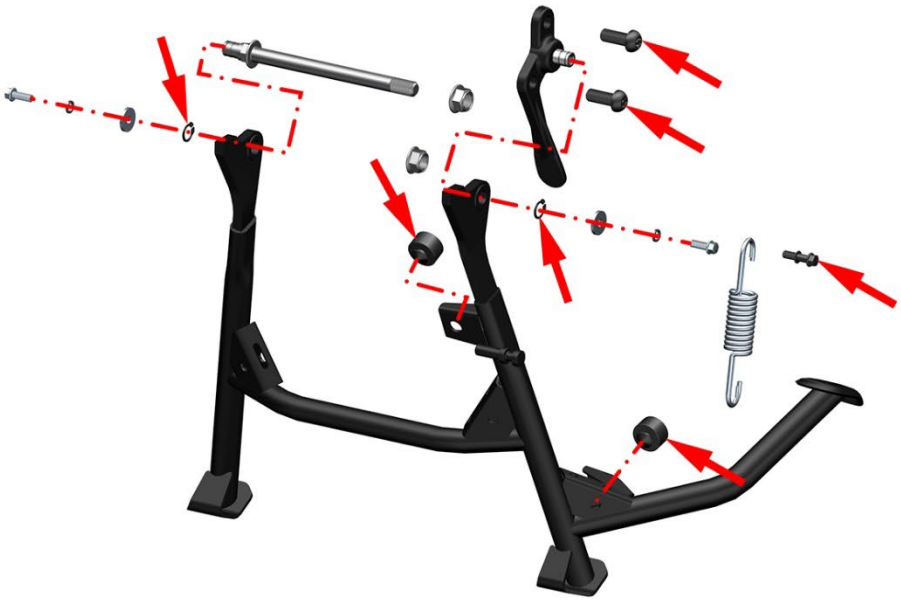

Inspect the parts indicated by the arrows in the picture above, and the disassembly method is detailed below.

2. Disassemble the main bracket

a. Use the T50 plum blossom socket with holes to remove the 3 bolts first, remove the left pedal assembly from the motocycle, pay attention to flip it to the back and unplug the power out switch. Standard torque: 65±5 N.m.

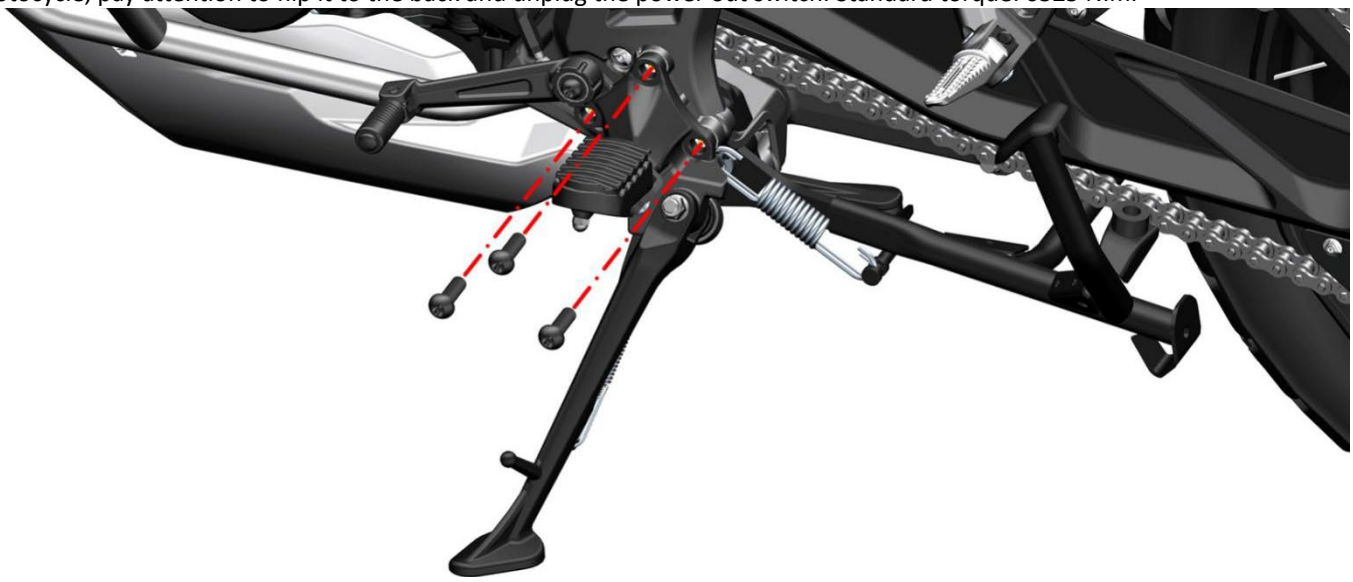

b. Remove the bolt with the 8# sleeve and remove the spring pad and flat pad. Standard torque: 12±1.5 N.m.

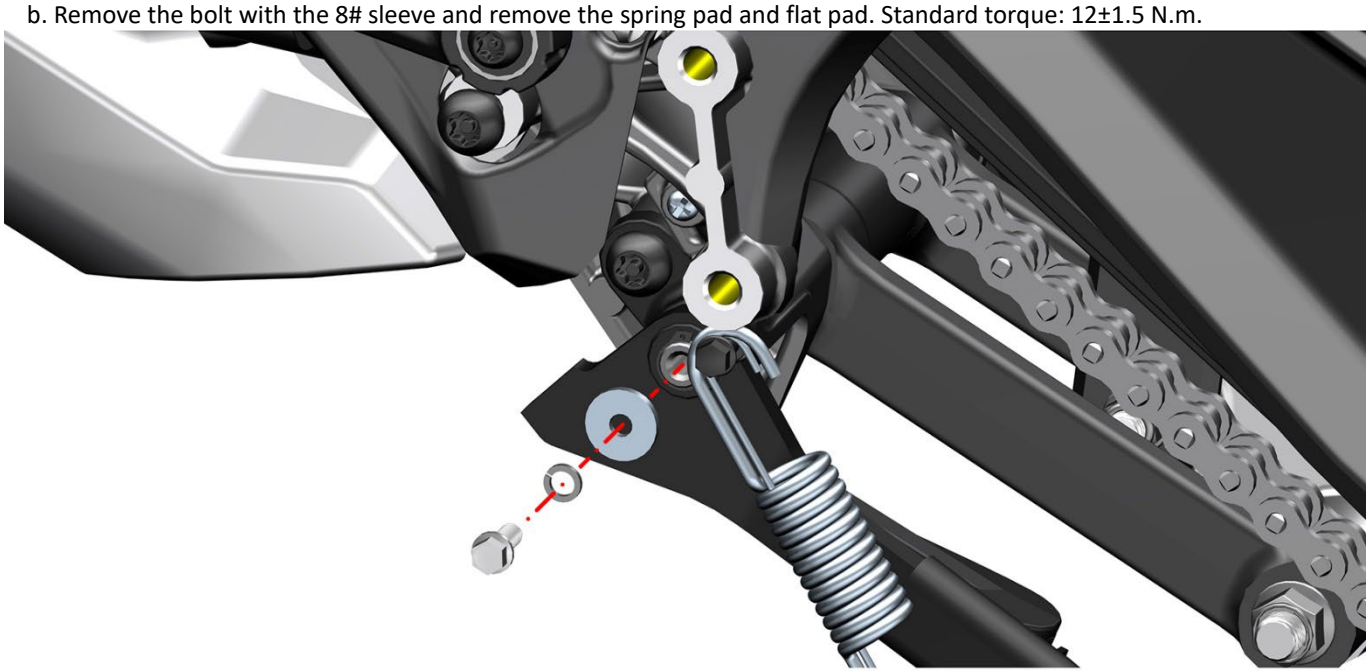

c. Refer to the method of removing the side bracket spring to remove the main bracket spring. After removing the bolt on the front of the main bracket (a) in a counterclockwise direction with a T50 plum blossom socket with holes, rotate the main bracket down until the other bolt is exposed (b in the figure). Standard torque: 65±5 N.m.

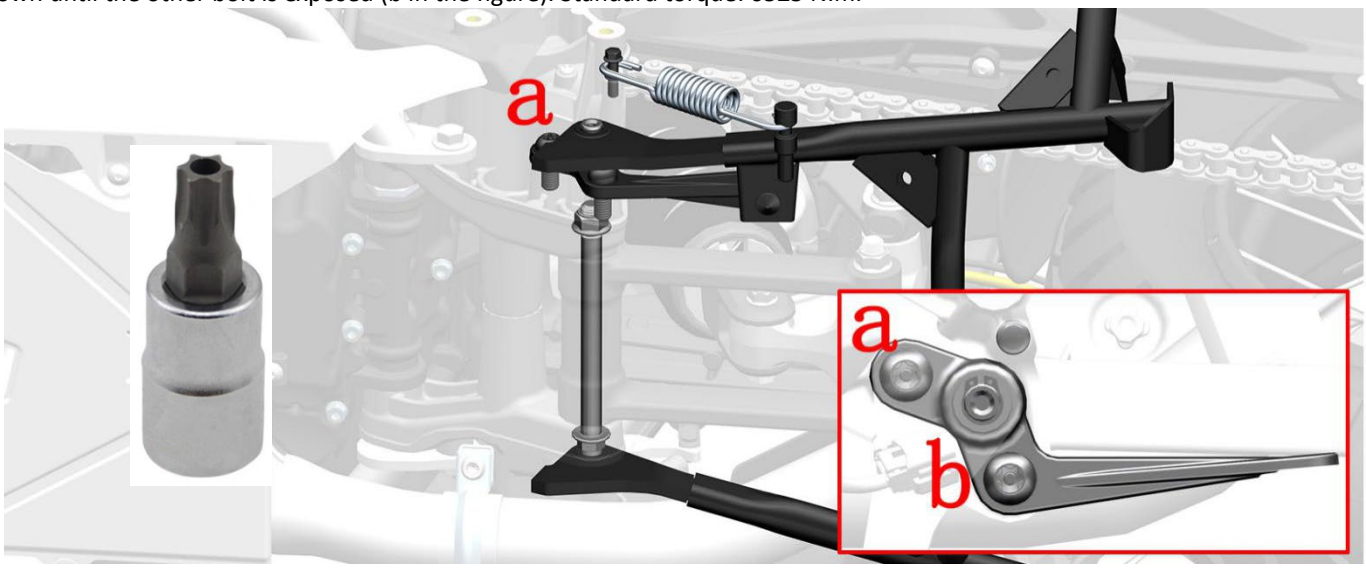

d.Use the external circlip pliers to remove the circlips on both sides.

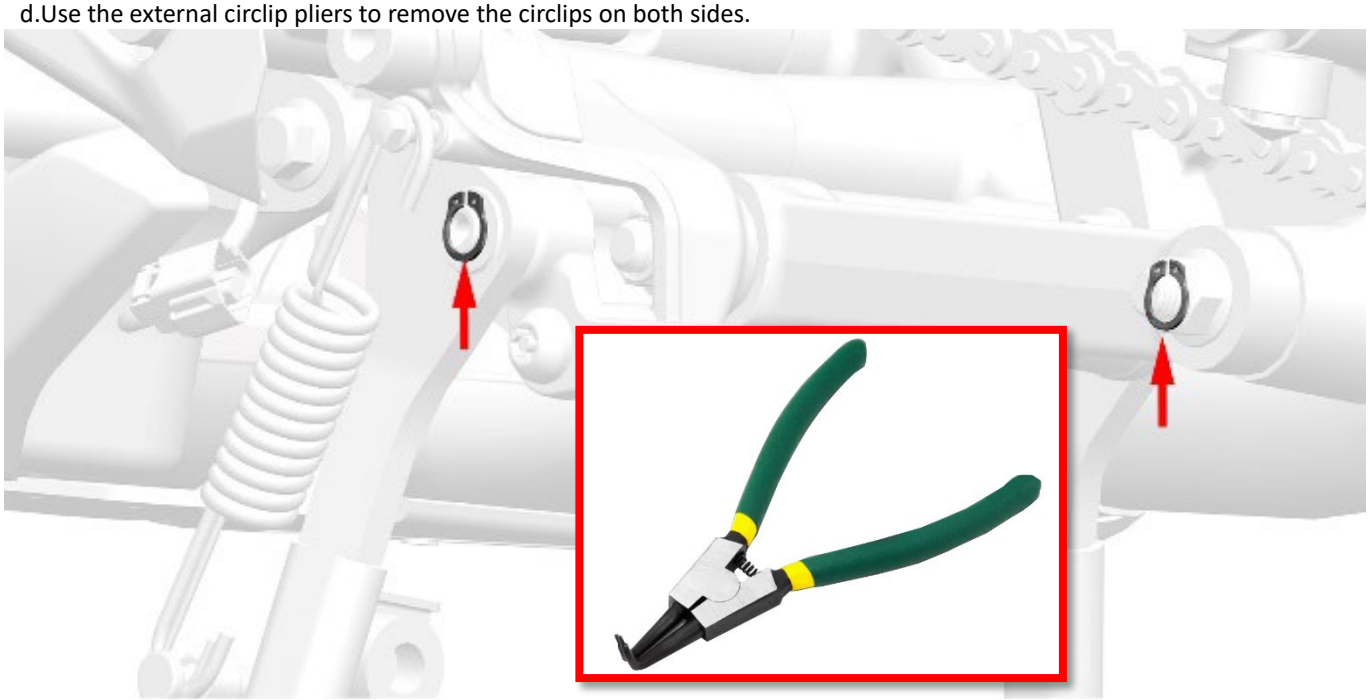

Rotate the main bracket assembly block up and inward, retreating into the gap in the left frame. The main bracket can be removed from the vehicle by panning it to the right side of the vehicle.

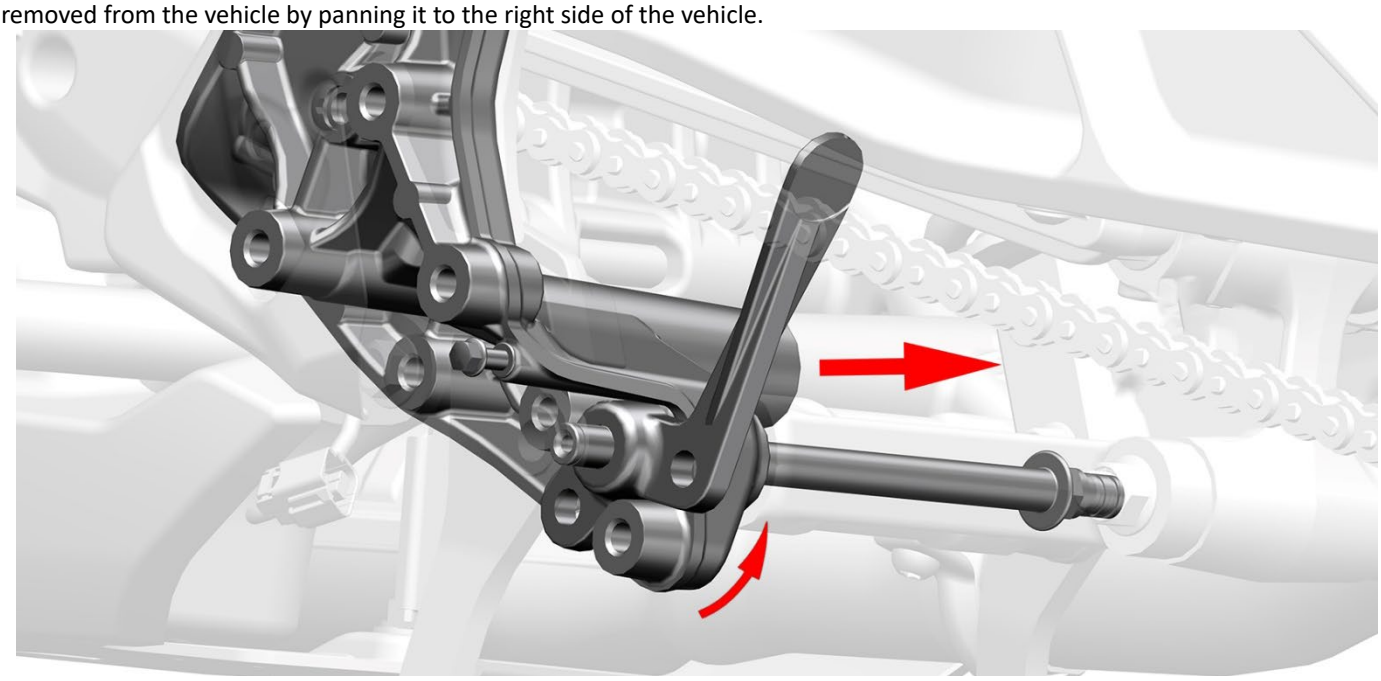

3. lubrication

After removing the main bracket, apply an appropriate amount of grease to the main bracket assembly block and the cylindrical surface of the main bracket shaft, and choose a grease suitable for the lowest local temperature.

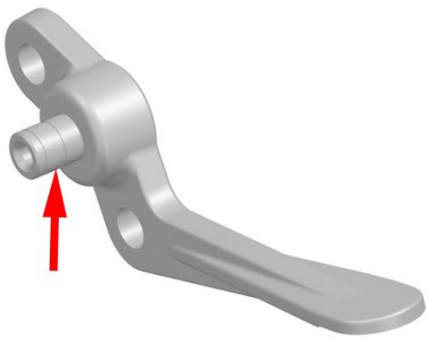

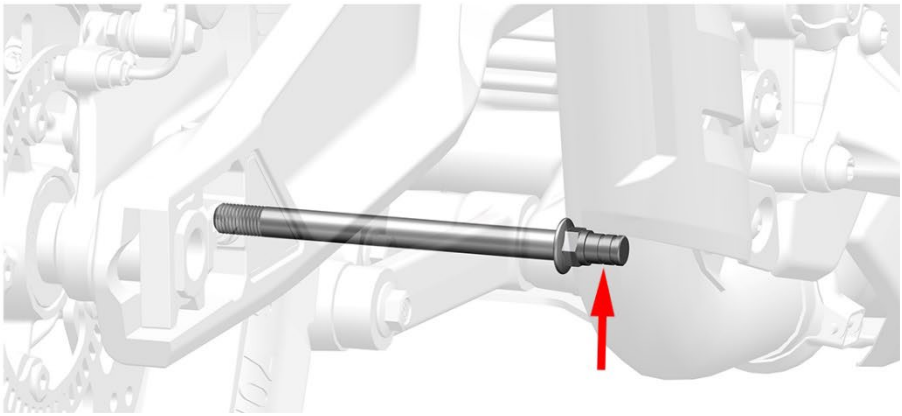

Replace the main bracket return spring post

Refer to the steps of removing the side bracket and foot pedal mount, and remove the main bracket counterclockwise with the 8# sleeve to reset the spring column. It is recommended to apply an appropriate amount of thread fastening glue before assembly. Torque: 12 N.m.

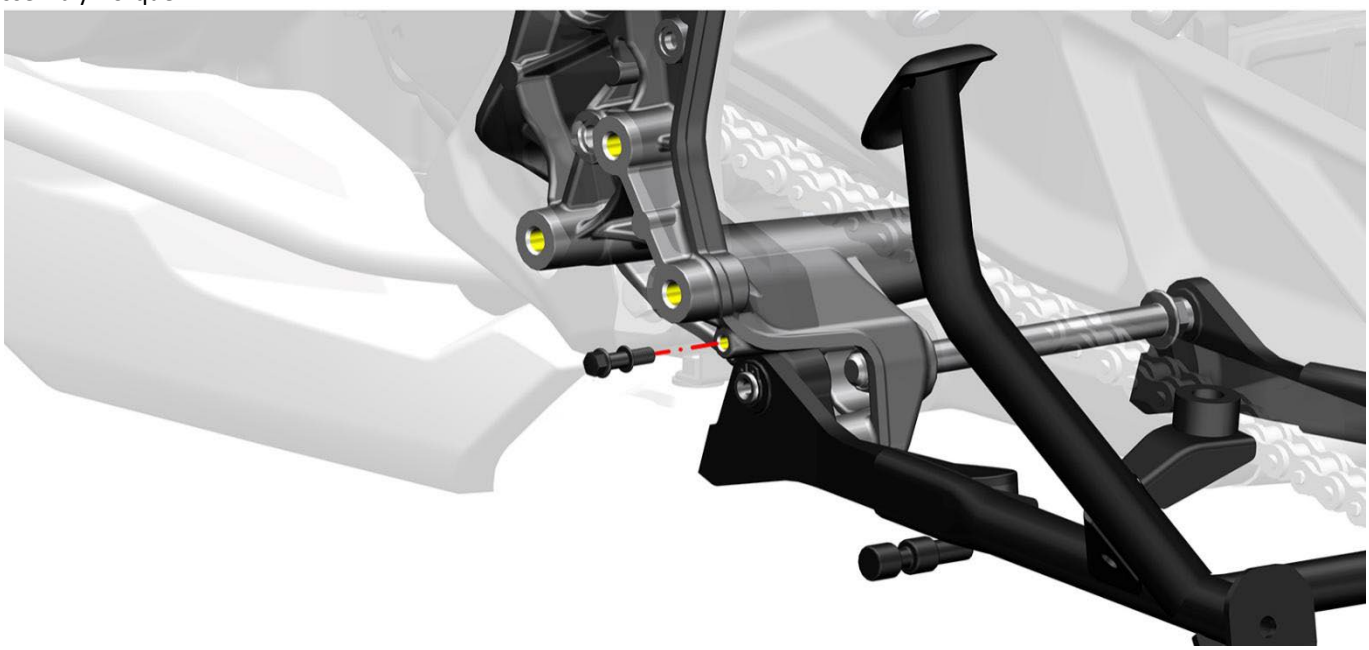

Shift lever rocker arm height adjustment

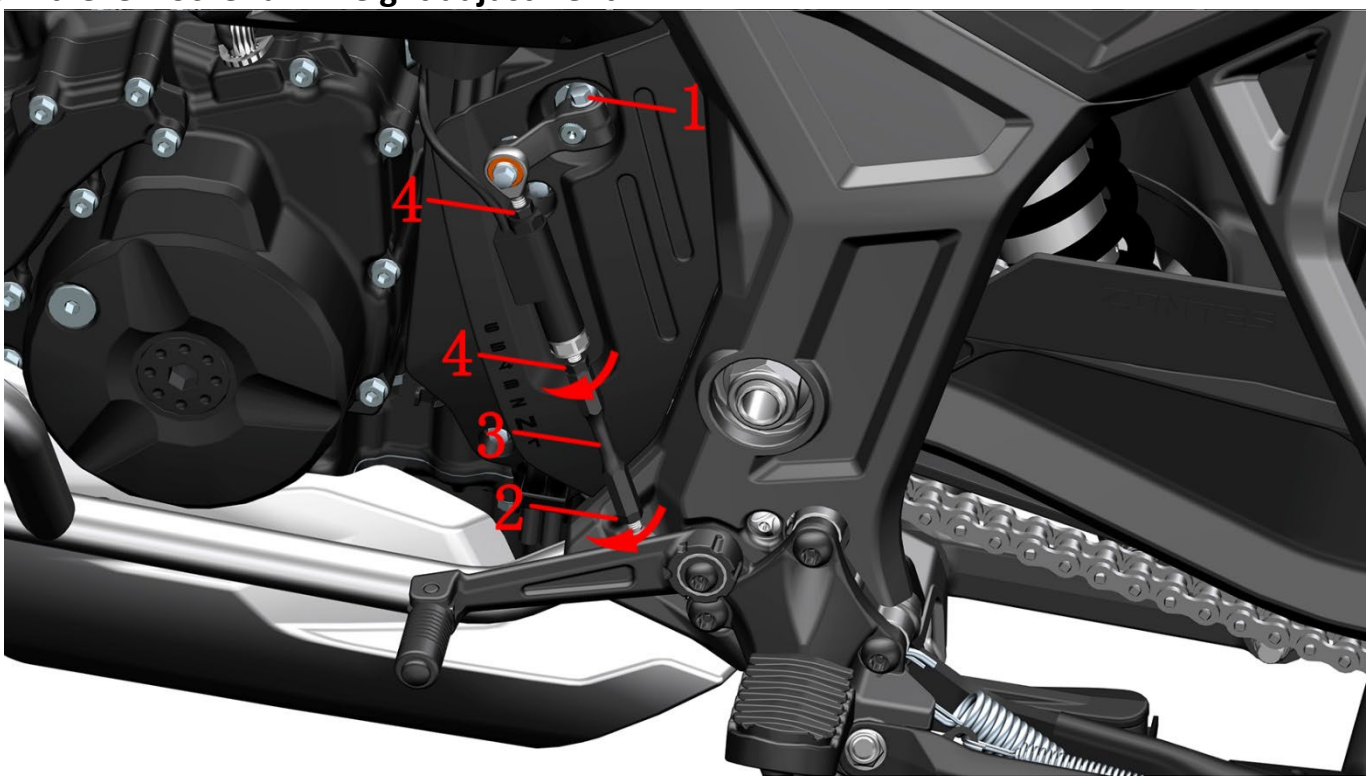

1-M6×22 bolt 2-GB6170 M6 3-adjusting screw 4-GB6170 M6-LH

If you need to fine-tune the height of the shift lever rocker arm, you can fix the adjusting screw (3) with 10# open wrench, and then loosen the nut (2) and (4) in the direction of the arrow, rotate the adjusting screw to make the shift rocker arm reach the appropriate height, and then lock the nut.

If the above method can not adjust the appropriate position can be 8# box wrench or short sleeve to remove the bolt (1), use a flat-head screwdriver to slightly open the middle slot of the spline rocker arm and pull it out, adjust to the appropriate height before assembly, pay attention to align the groove in the middle of the spline.

Inspection of sound, light and electric devices

Attention:

●Before driving, check whether the lights of the motocycle are normal, including turn signals, taillights, brake lights, headlights, etc. Whether the horn is normal. Whether the windshield lift is normal.

1. Check

2024 model

For details, see the luminaire distribution diagram in the vehicle information of this manual.

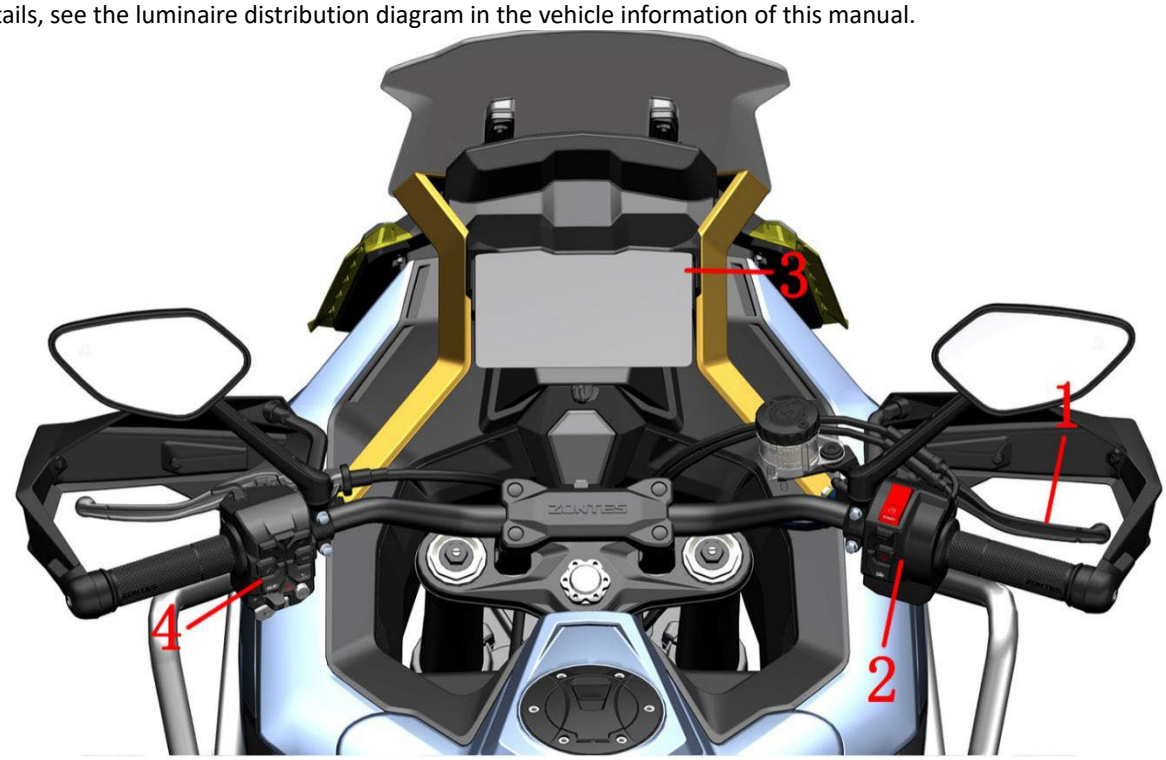

1. Front brake handle 2. Right hand handle switch 3. Meter 4. Left hand handle switch

a. Park the vehicle on flat ground or on a lifting platform, put down the main bracket and put away the side brackets.

b. The function of the right-hand handle switch is shown in the figure below

MODE

It is used to adjust the vehicle operation mode, E/S mode.

⏻Power on button

Press the button and the vehicle will turn on

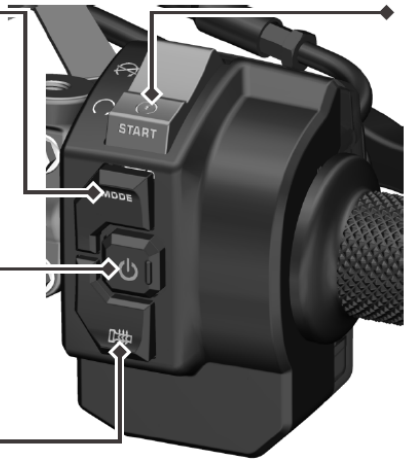

Flame-out ignition switch

This switch is installed on the right-hand handle switch, which is a rocker type switch, and the rocker shaft is located in the center of the rocker. When the switch is in the "⊗" position, the vehicle is turned off, when the switch is in the "⊙" position, the ECU is powered on, the oil pump is self-checked, at this time pinch the clutch, press the switch, when it is in the "⊙" position, the engine is ignited.

Electric hot handlebar button ✶

Press to turn on the electric heating handlebar function.

✶ This function is only available for models with heated handle.

c.The function of the left-hand handle switch is shown in the figure below

TCS Switch

Used to enable and disable the TCS function. By default, the TCS function is on. Press and hold the TCS switch to turn off the TCS function, and press and hold the switch again to turn the TCS function back on.

Return/Exit Switch

Press once to return to the previous meter screen menu or exit the current function selection.

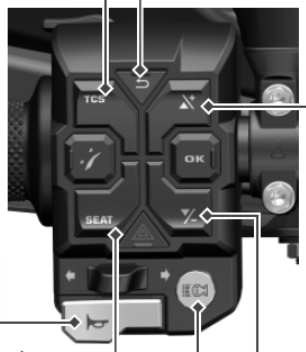

Right Select Switch

Select up/right in gauge screen options.
The windshield rises in windshield mode.

Horn Button

Press the button to sound the horn.

Left Select Switch

Select down/left in instrument screen options.
The windshield lowers in windshield mode.

SEAT Switch

Press briefly to unlock the seat.

Fog light switch

Short press to turn on fog lights, then short press to turn off fog lights. Do not turn on the fog lights for a long time while idling, as it may cause voltage alarms.

High and low beam overtaking light buttons

By default, turn on the low beam, turn on the high beam up, and press down to turn on the overtaking lights

High beams

Low beams

Overtaking lights

Windshield Button

Press the windshield button once to enter the windshield control mode. During this mode, use the "" button to raise the windshield and the "" button to lower the windshield.

You can manually exit the windshield control mode by pressing the"" button, or it will automatically exit after 3 seconds of inactivity.

If you notice that the windshield's range of motion is reduced, press and hold the windshield button for 3 seconds and then release it. The windshield will perform an automatic calibration.

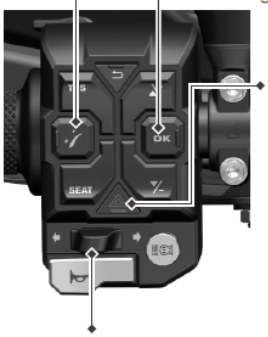

OK BUTTON

Press to confirm your selection.

Hazard warning lights

Press to turn on the hazard warning light, and press again to turn off the hazard warning light.

Turn signal operation

The switch is pushed to the left"" and the left turn signal flashes. When pushed to the right "" , the right turn signal flashes, and the corresponding turn indicator on the dashboard surface lights up at the same time.

2026 model

For details, see the luminaire distribution diagram in the vehicle information of this manual.

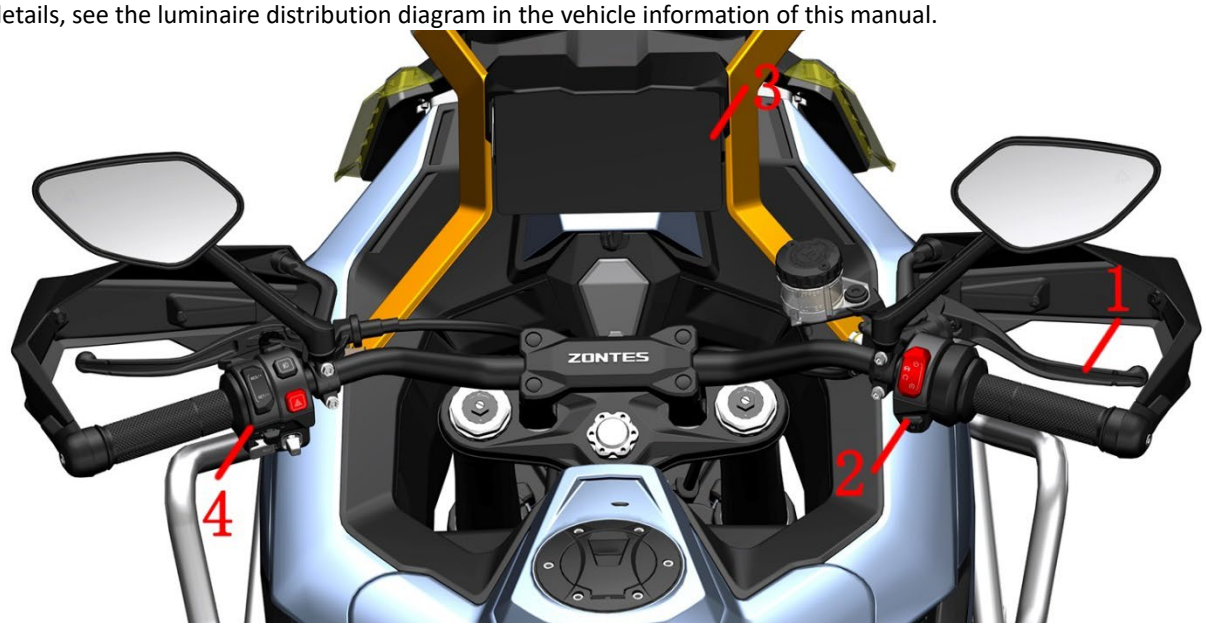

1. Front brake handle 2. Right hand handle switch 3. Meter 4. Left hand handle switch

a. Park the vehicle on flat ground or on a lifting platform, put down the main bracket and put away the side brackets.

b. The function of the right-hand handle switch is shown in the figure below

开机键

短按：车辆开机。

长按：车辆关机。

熄火点火开关

此开关装是一种摇板式开关，拨在“”位置时，电路接通，电机才能发动。若把开关拨在“”位置，起动电路完全切断，电机不能起动（此方法可以紧急熄火）。

电起动开关

按下此按钮能接通起动电路，在起动时必须收起侧停车架，确认发动机熄火开关处于位置后，并握紧刹车手柄，方能起动。

⚠注意

▪ 连续起动发动机，每次起动时间不要超过5s，因为大量放电会使电路和起动电机异常发热，试开几次后仍不能起动时，应停下检查供油系统和起动电路系统。

M开关

仅在熄火开关处于按下状态，且转把开度为0，巡航功能未运行时，短按M按钮，切换驾驶模式。以下为5种驾驶模式，可循环进行切换。

：SPORT（运动）模式

：ROAD（道路）模式

：RAIN（雨天）模式

：OFF ROAD（越野）模式

：RIDER（骑手）模式

c.The function of the left-hand handle switch is shown in the figure below

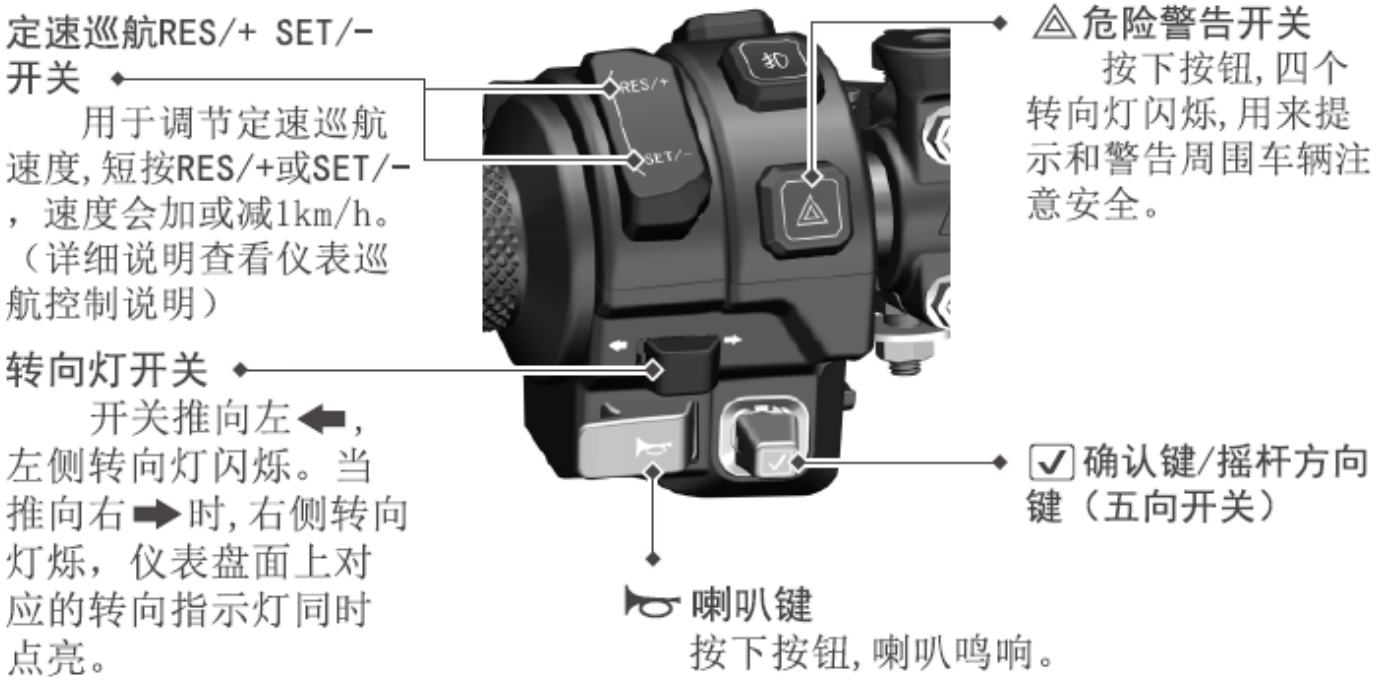

d.Check the battery voltage

Open the cushion, lift the protective rubber case of the positive and negative electrodes of the battery, and use a multimeter to measure the battery voltage.

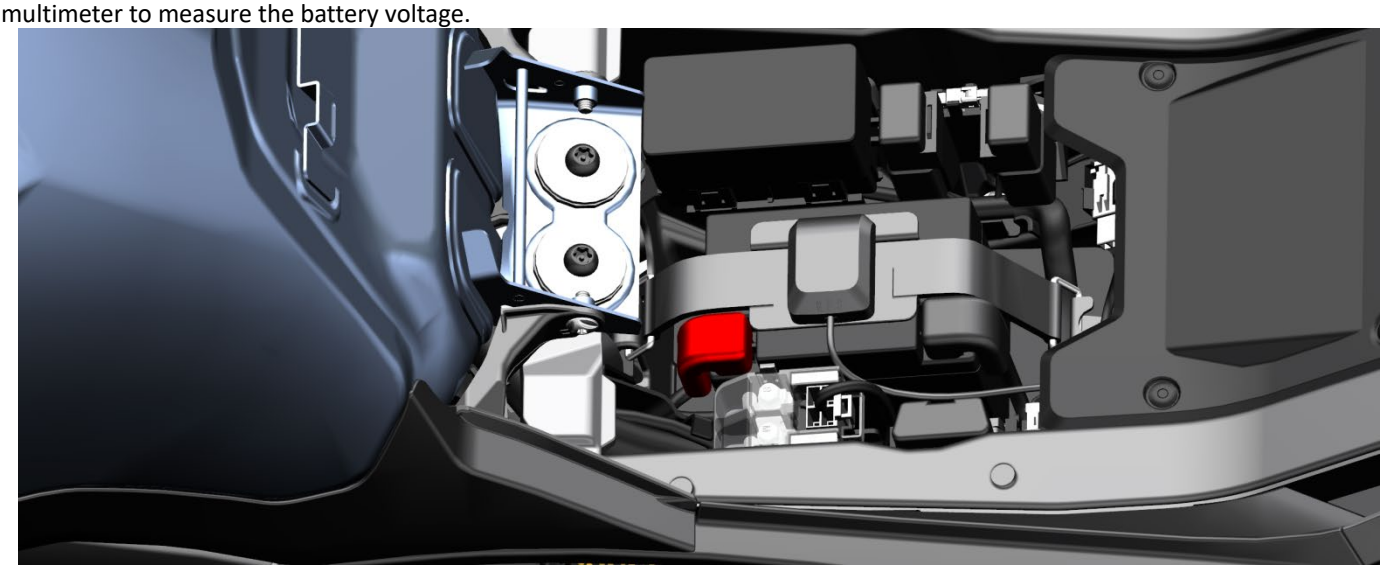

The charging voltage of the charger shall not be higher than 15V. When you do not use the motocycle for a long time, you should charge it regularly according to the requirements of the driving manual. If the battery loss effect is properly handled by a professional recycling agency, do not discard it at will to avoid pollution to the environment.

2024 model charged

If the battery feed does not start, it can be charged through the PKE charging port for 2024 model.

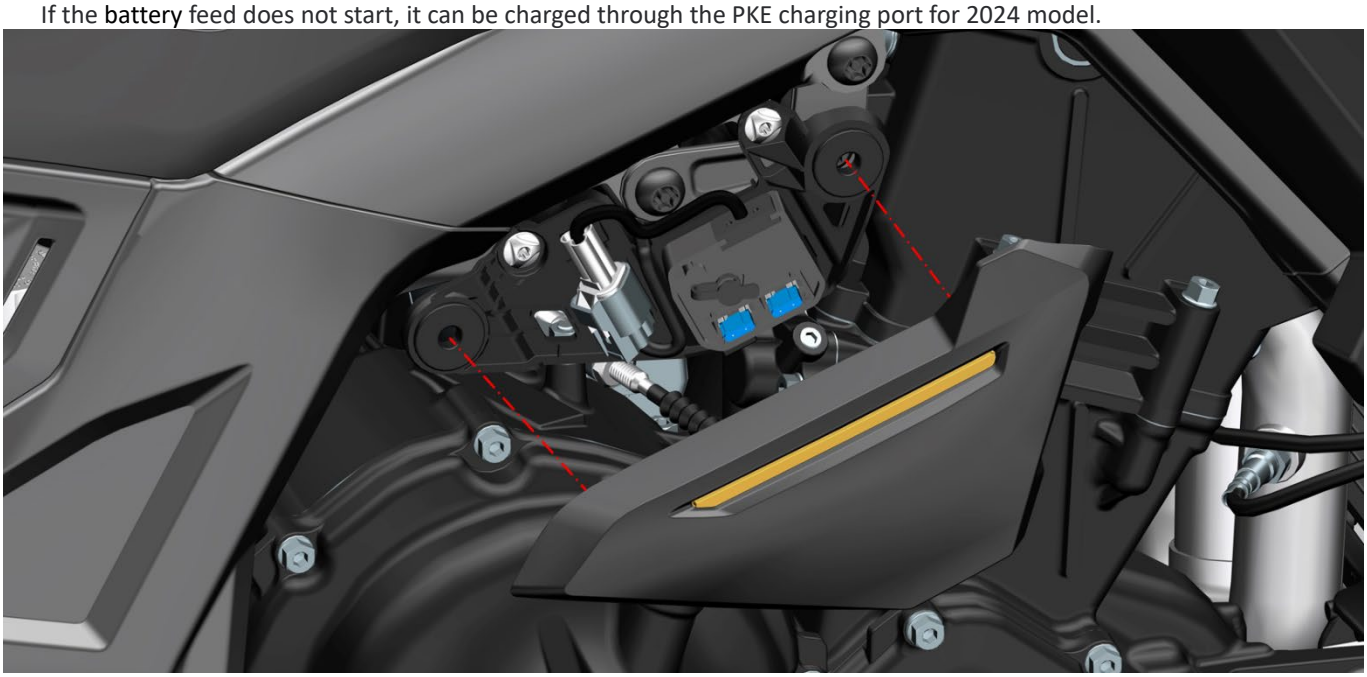

Remove the rubber plug and insert the DC plug of the charger that comes standard with the original factory. Then plug the AC socket into a 110-220V power supply. If the battery is damaged by using an inferior charger, it is not within the scope of the three guarantees.

●Note: When reassembling the battery or fuse, please remember to reset the EFI hardware, as detailed in the service information in this section.

2026 model charged

If the battery is depleted and cannot start, the battery can be charged through the Type-C port of the bidirectional USB charger. After opening the dust cap of the vehicle charging port, use a power bank or charger to connect to the Type-C charging port for charging.

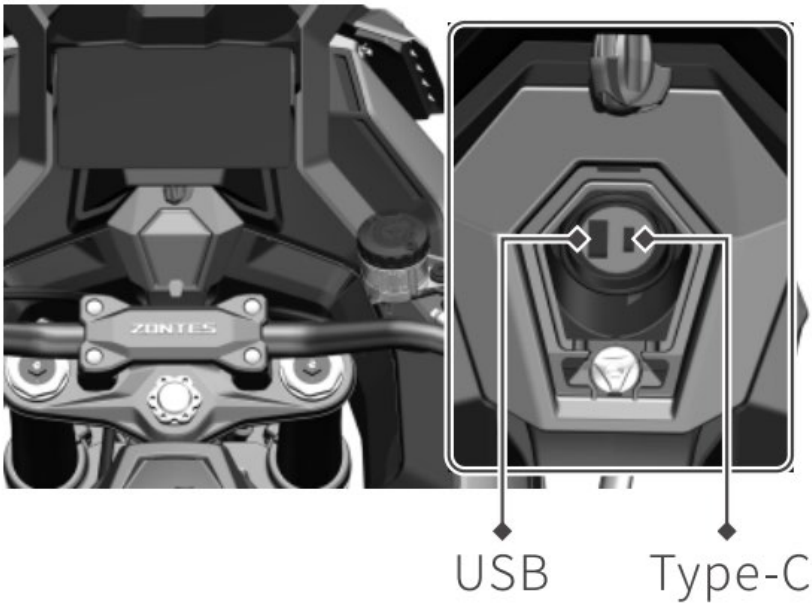

- The USB port cannot charge the battery in reverse; only the Type-C port can charge the battery.
- Use a charger or power bank to charge the vehicle battery via the Type-C port, noting that the maximum charging power is 30W, and it supports AFC/FCP/PD2.0/PD3.0 charging protocols.

2. Headlamp light height adjustment

Attention

●Headlights that are too high or too low can affect safe driving. The height of the lights should be adjusted according to the presence or absence of occupants and changes in the weight of the driver.

●It is strictly forbidden to adjust the height of the lights during riding. It is recommended to find a smooth road surface with a straight line distance of about 150 meters at night without affecting traffic safety.

The headlamps have two independently adjustable sections, which are adjusted for the high beam and low beam, which are visible by removing the left and right surround panels. (Height adjustment of both left and right headlights).

Break the panel outward from the arrow indication, then move up to remove the left panel from the motocycle, and remove the right panel as described above.

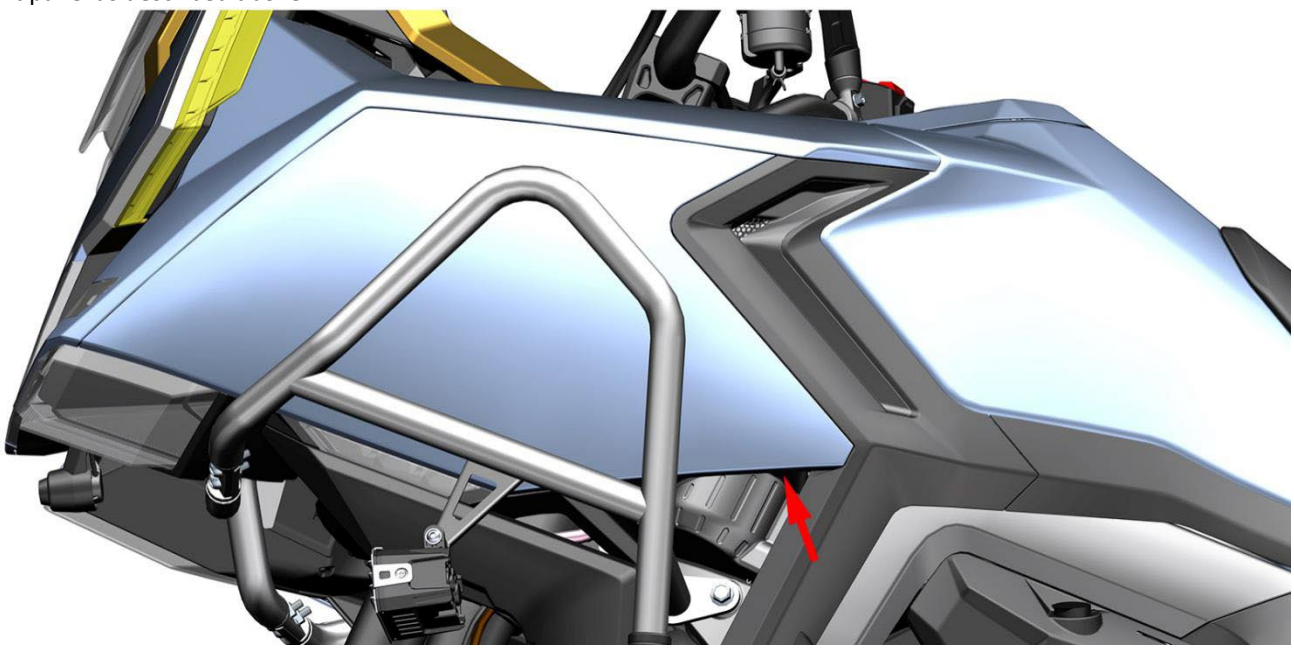

Use a Phillips screwdriver with a diameter of 6mm and a length of 150～200mm to align the sawtooth of the dimming bolt, rotate it counterclockwise to turn it down, and turn it clockwise to turn it up.

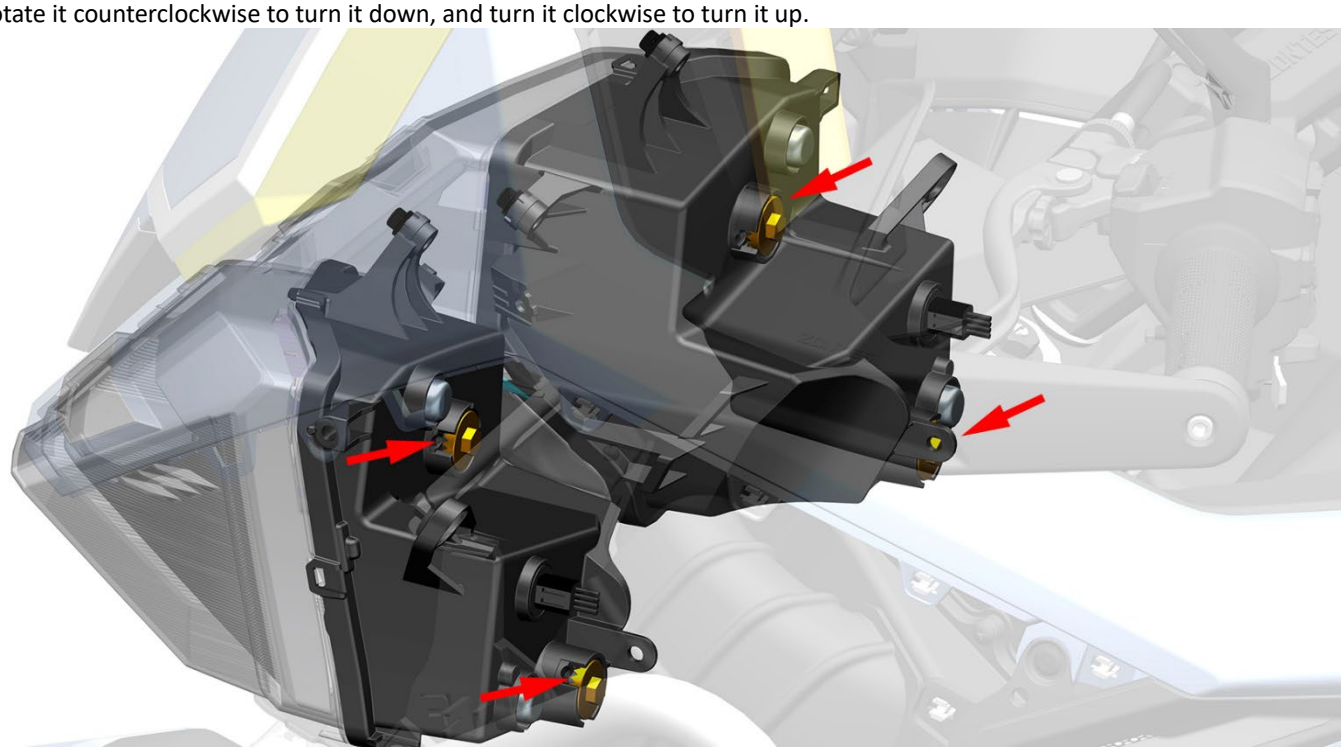

3. Fuse box

Attention：

●If the fuse is blown, the fuse of the same specification must be replaced, and it is forbidden to use wires such as copper and iron wires for direct connection.

●If it is fused again after replacement, it is necessary to check the fault of the vehicle cable before replacement.

●This vehicle uses a small fuse. It is about 11mm wide, 17mm long, and 4mm thick.

●You can use the buzzer of the multimeter to connect the exposed metal part of the upper part of the fuse to determine whether it has been blown or not, or use a tool to unplug it and observe.

2024 model

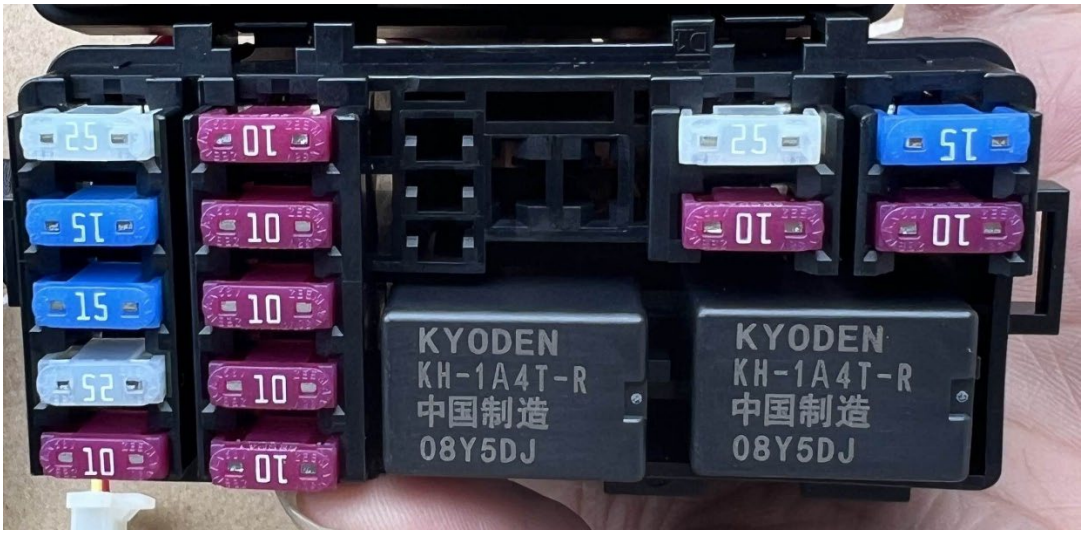

2026 model

4. Troubleshooting

If the button does not move, it is directly judged to be a switch problem. If there is no response when pressed, it is necessary to determine the problem of the switch, line, or electrical device itself.

4.1 Horn

Attention：

●When adjusting or checking the horn, the interval should be more than 5 seconds, and continuous beeping may cause ablation of the inner coil of the horn.

●The horn is a riveted structure, which is difficult to recover after disassembly.

●The nut on the bracket (where the arrow indicates) is forbidden to be adjusted.

a. If the horn switch does not sound, you should refer to the troubleshooting process of the left handle switch on the next page

b. The sound of the horn is abnormal

If the voice is low, hoarse, etc., first confirm whether the power is sufficient, and then turn on the headlights to judge whether the power is sufficient according to the brightness of the light. The sound of starting the engine to pull up the rpm is normal, and the low rpm is not normal can also be judged as the battery is insufficient. The battery needs to be charged.

If the multimeter detects that the battery is sufficient, you can connect it to a battery with sufficient power. If the fault is still there, unplug the two plugs of the horn first, directly connect two external wires to touch the horn, if there is a sound, the horn is normal, you need to check the line between the horn and the LCM controller; If there is no sound, the horn is faulty and needs to be replaced.

If you need to remove the horn, if the bumper has been installed, insert a T25 wrench into the front mounting bracket of the bumper above the front fender to remove the bolts. Pull out the horn and unplug it to remove it.

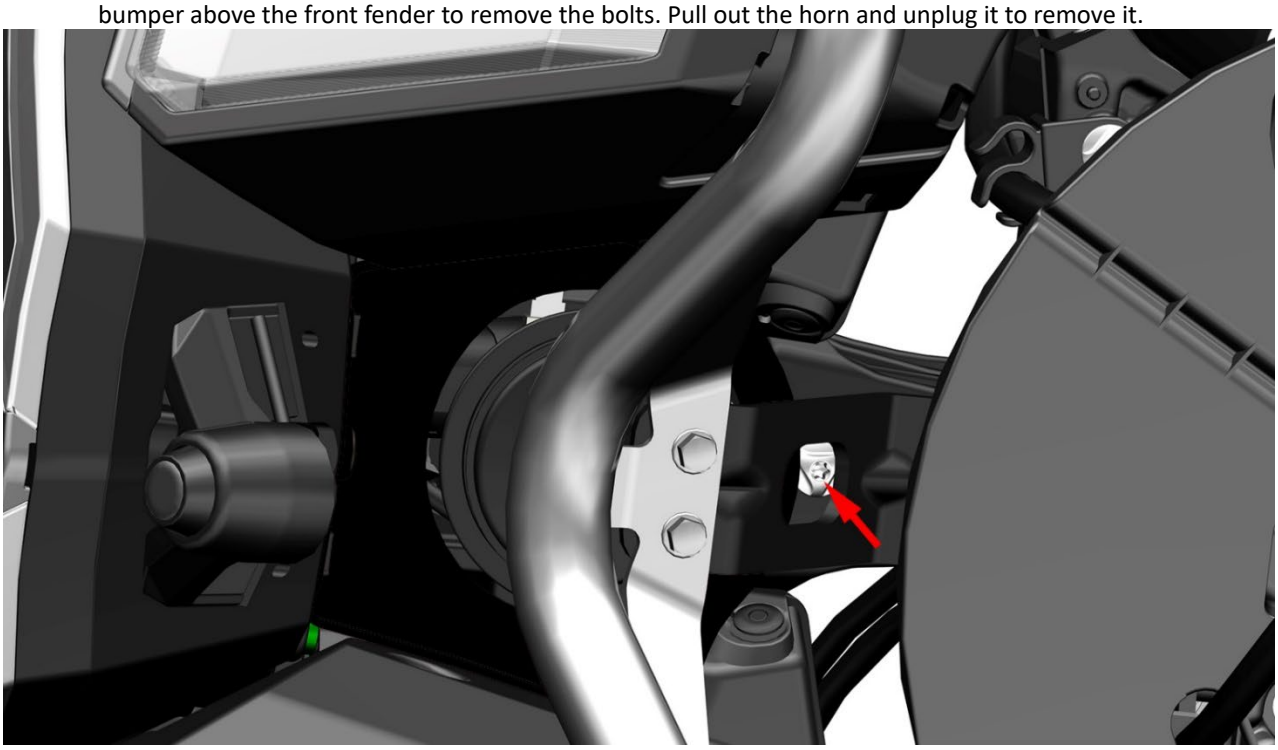

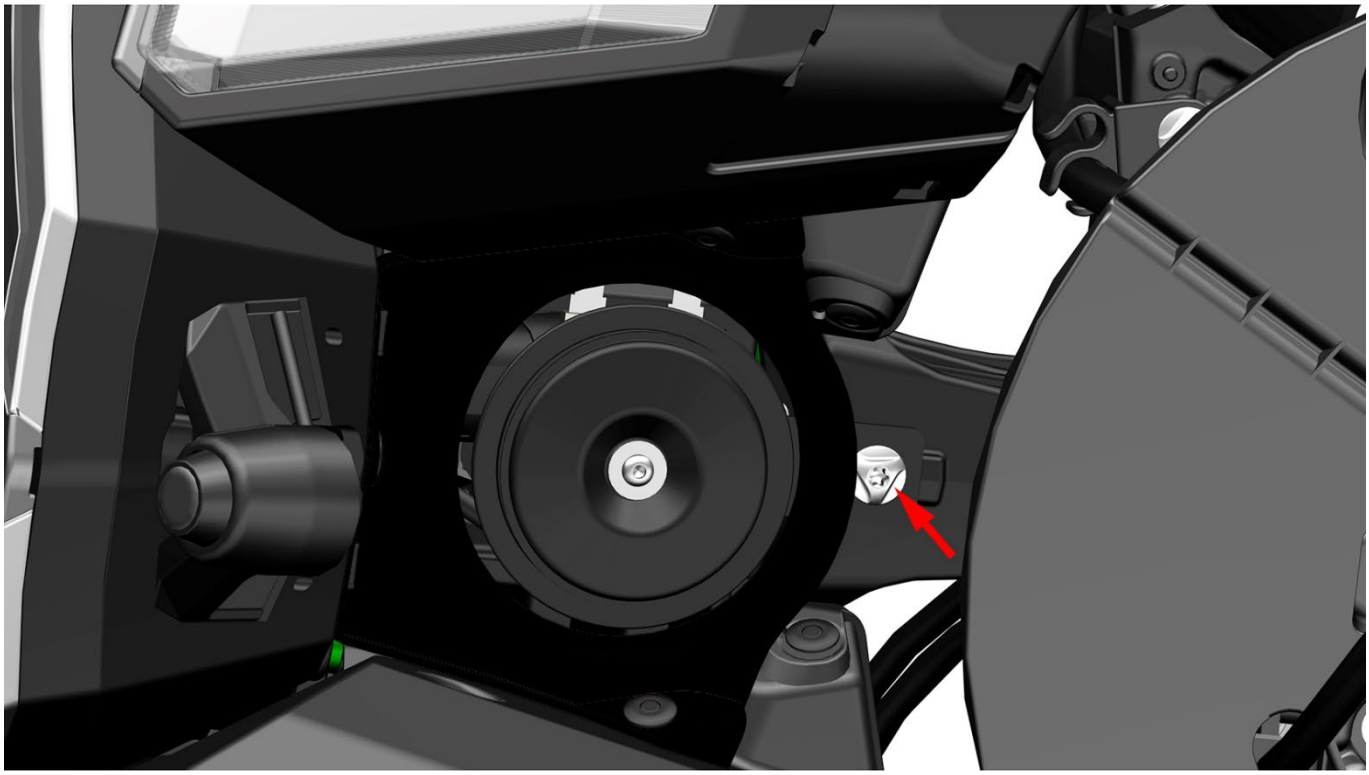

4.2 Light

Noted:

●When using wires to detect lamps, you need to distinguish between positive and negative poles. For detailed wire colors, please refer to the electrical schematic diagram in the driving manual provided with the vehicle.

The troubleshooting methods for lamps are basically the same. You can first directly lead the wires to the battery with batteries. If the lamp is normal, you need to check the cable or switch failure. If it is abnormal, it is a lamp failure. The lamps of this vehicle are all LED, and the lamp housing is generally ultrasonically welded or sealed with glue. The waterproof performance will fail after disassembly.

●There are air holes reserved on the lamps. When the ambient humidity is high, water mist may form inside the lamps, which generally does not affect the use. It will disappear automatically after the humidity drops.

●The surface of the lamp should be kept clean. It can be moistened with clean water and then wiped gently with a clean soft cloth. The soft cloth should be changed to another position or cleaned with clean water each time it is wiped. If it is wiped directly, the residual fine sand may scratch the surface of the lamp.

General process of lamp troubleshooting:

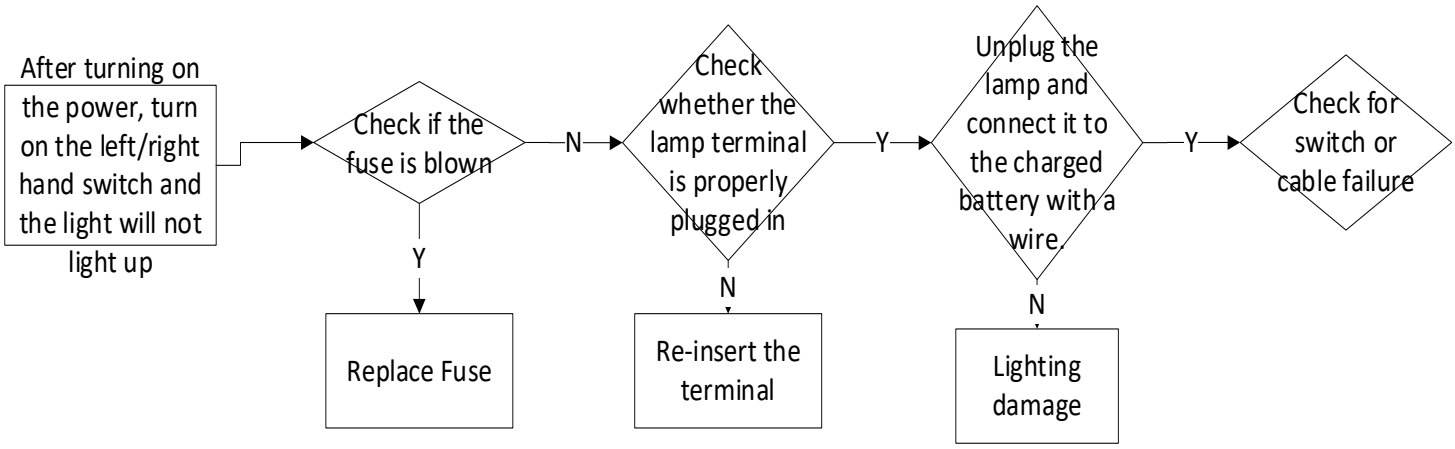

4.3 Windshield failure

If the windshield rises or falls abnormally when the windshield switch is pressed, you can check according to the following two phenomena.

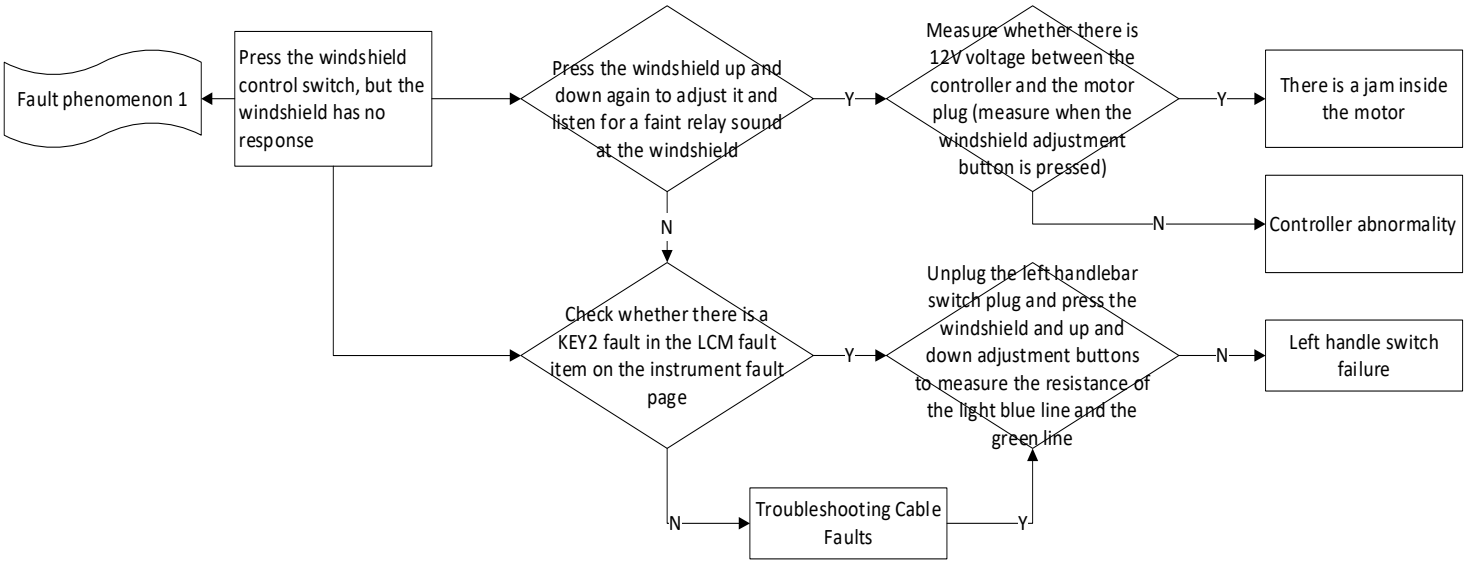

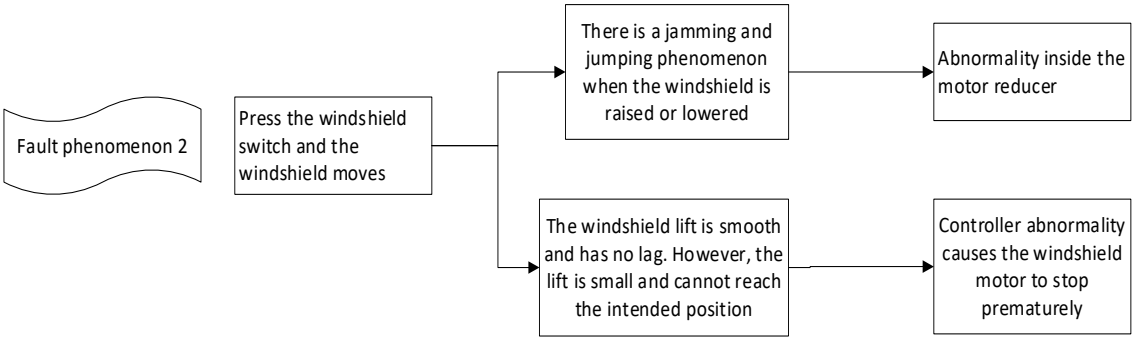

4.4 Right handle switch

a. Pressing the start button does not respond:

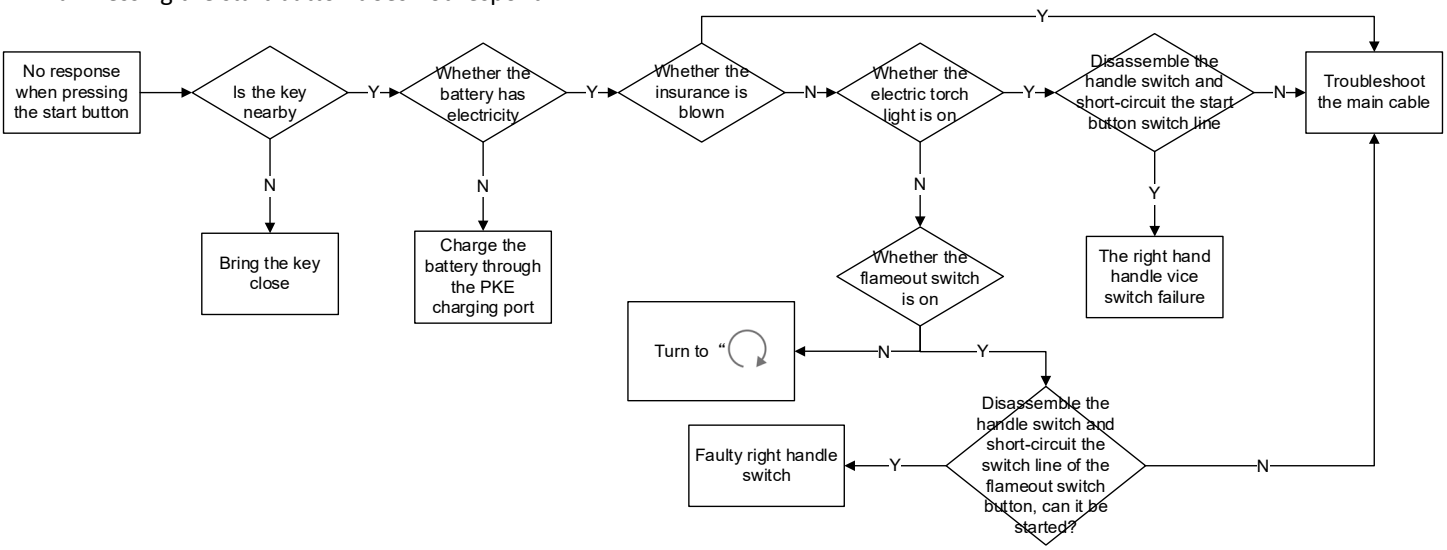

b. The "MODE" key does not respond

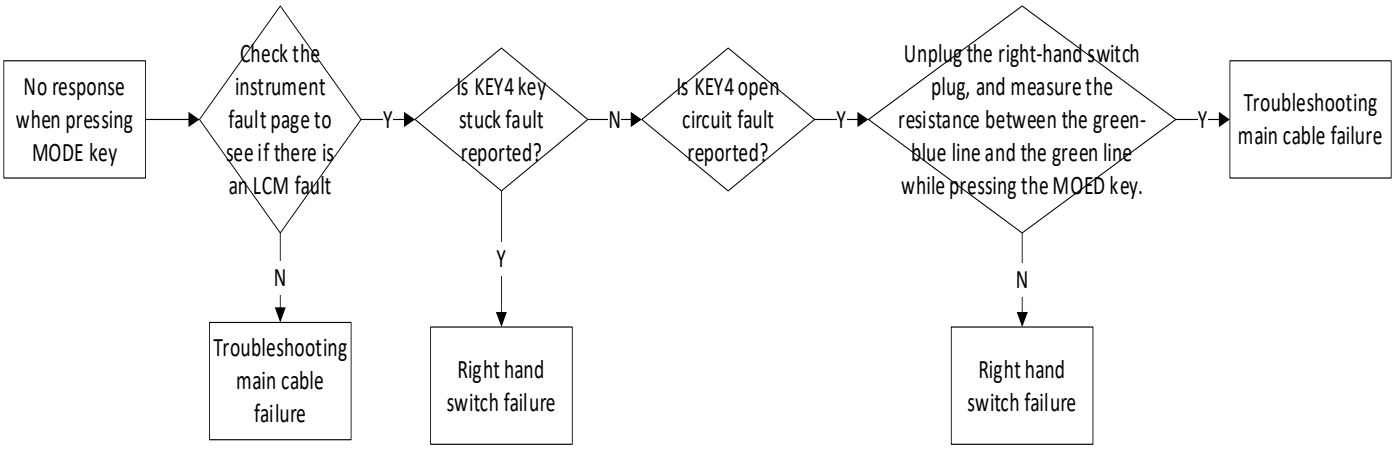

c.“ ”Button failure

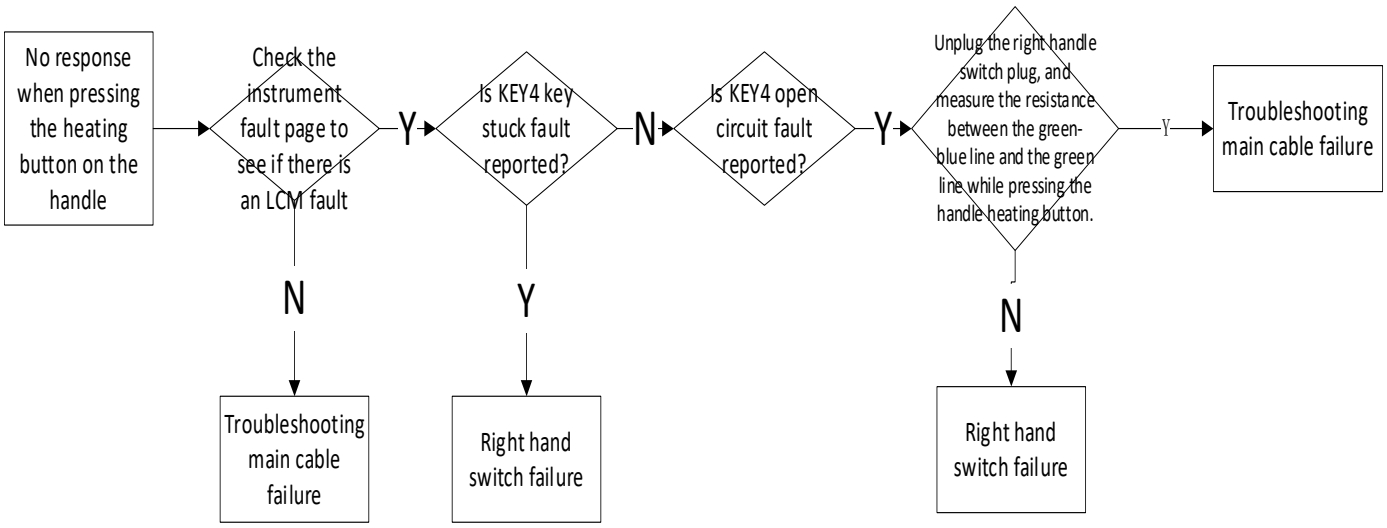

d.“ ”No response

The driver's manual contains a detailed description of the PKE function, including how to start the vehicle in an emergency when the induction key runs out of power, and the specific meaning of the buzzer tone. I will not repeat it here.

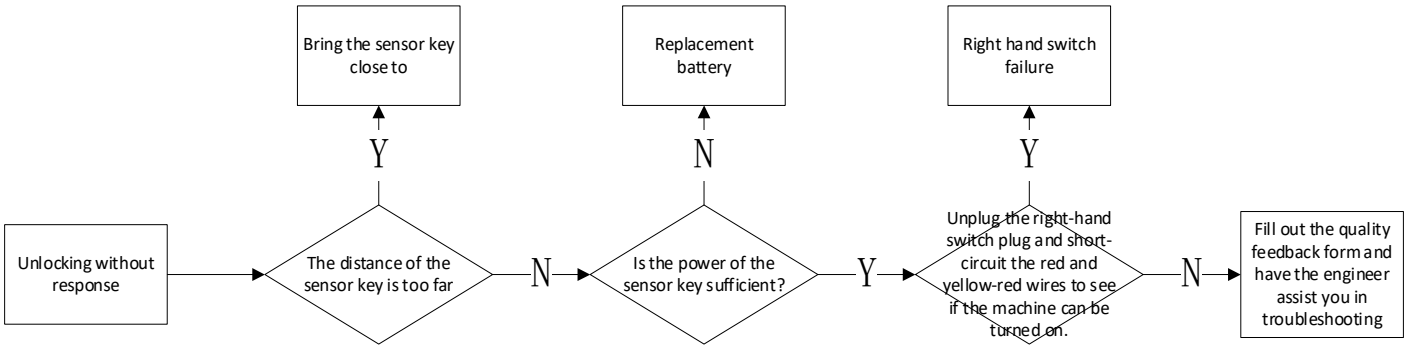

4.5 2024 model Left hand switch

The left-hand switch controls the turn signal, horn, high and low beam lights, hazard warning lights, and overtaking lights. There are many lines, making it difficult to check.

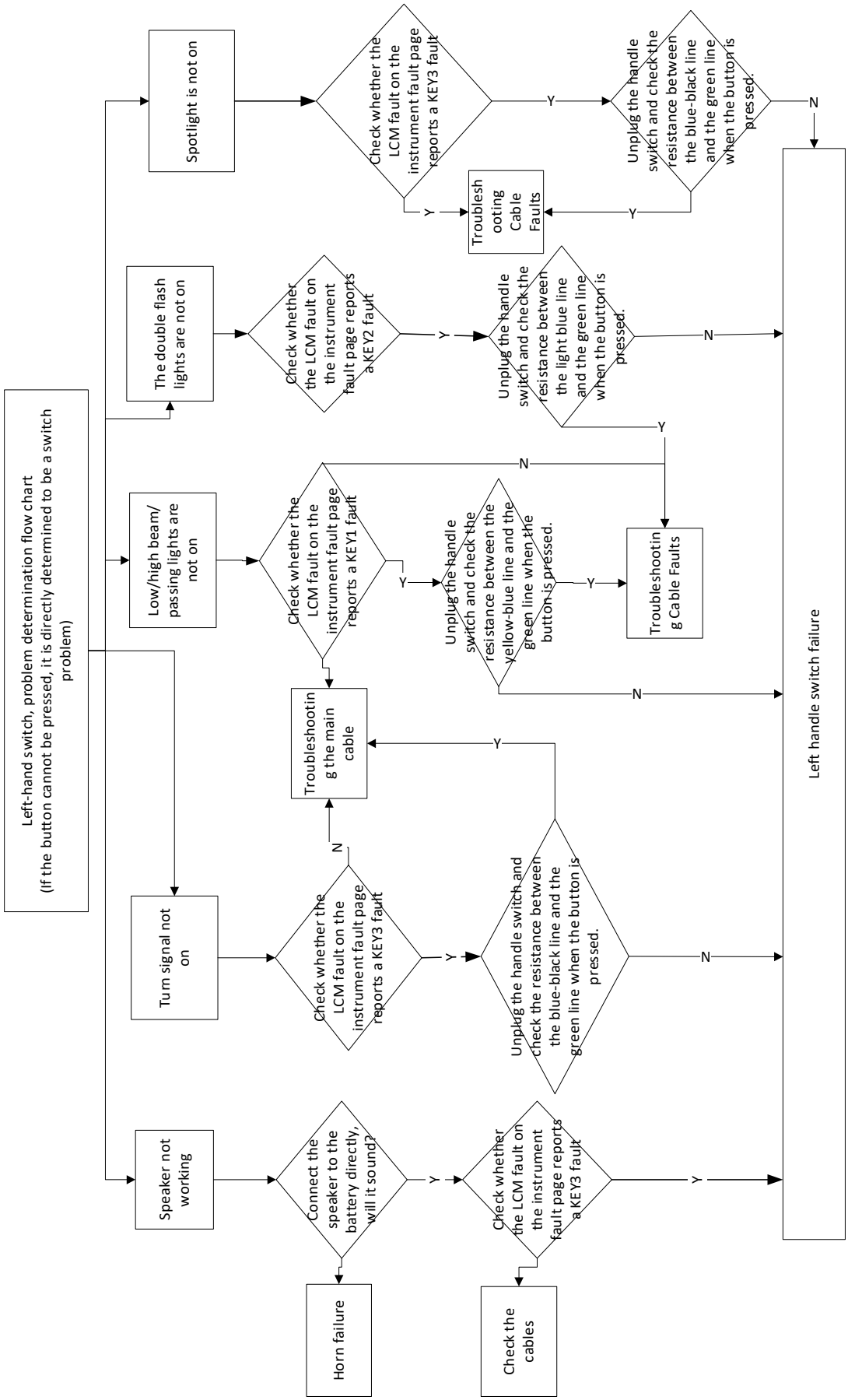

“SEAT”Button failure

If the battery is dead and it is inconvenient to charge, or the seat lock fails and cannot be opened, you can fill in the quality feedback form and ask the engineer to guide you on how to manually open the seat. For safety reasons, this manual does not provide this method.

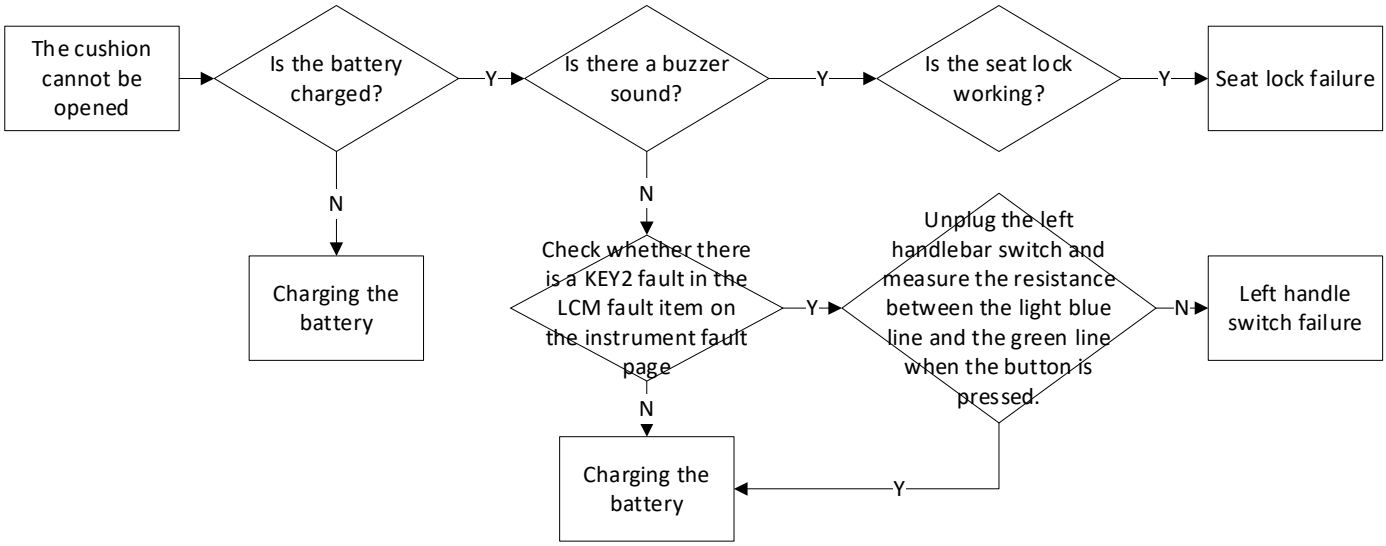

4.6 Heated Handgrip (2026 Model)

NO.	Fault Phenomenon	Troubleshooting Process
1	Unilateral heating failure	Replace the corresponding electronic throttle heated handlebar
2	Heating failure on both sides	First, check if the vehicle voltage is greater than 13.5V. If the voltage is insufficient, wait until the voltage reaches above 13.5V before testing the heating function; Check the instrument panel to see if there are any fault codes in the MCM (when troubleshooting, check the relevant fault codes in the instrument panel - vehicle information - fault information). If 0x0100 appears, replace the electronic throttle heating handle; otherwise, contact the MCM control box engineer for troubleshooting.
3	Automatic heating	Contact MCM control box engineer for troubleshooting

4.7 Electronic Throttle (2026 Model)

NO.	Fault Phenomenon	Troubleshooting Process
1	The vehicle does not respond when the throttle is pulled.	First, check whether the electronic throttle signal wire of the handlebar switch is in good contact, without looseness, and whether the wire color and position are correct; check whether there are fault codes shown in the above figure on the instrument (check the relevant fault codes in Instrument - Vehicle Information - Fault Information during troubleshooting). If there are fault codes, replace the electronic throttle heated handlebar; if there are no fault codes, contact the EFI engineer for troubleshooting.
2	The accelerator is weak and fails to reach high speeds	First, check whether the connector of the handlebar switch has any retracted pins; check whether the instrument has the fault code shown in the above figure (check the relevant fault code in the instrument - vehicle information - fault information during troubleshooting). If there is a fault code, replace the electronic throttle heating handlebar; if there is no fault code, contact the EFI engineer for troubleshooting;
3	The accelerator has returned to its position, but the fuel does not return.	Check if the dashboard has the fault codes shown in the above figure (check the relevant fault codes in Dashboard - Vehicle Information - Fault Information during troubleshooting). If there are fault codes, replace the electronic throttle heating handle; if there are no fault codes, contact the EFI engineer for troubleshooting;

3. EFI system

Pre-Service Notice

1. The structure and working principle of the EFI system are relatively complex. Before checking and troubleshooting, you need to have a certain understanding of the working principle and structural characteristics of each EFI system. The content of this chapter requires certain maintenance experience. It is recommended to go to a qualified maintenance unit for inspection or maintenance.

2. Please keep the fuel in the fuel tank at least 3L (3.17 US qt, 2.64 lmp qt, 0.79 US gal, 0.66 lmp gal), otherwise it will affect the normal operation of the electronic fuel injection system. When the fuel level on the instrument shows 1 grid, refill the fuel as soon as possible.

3. Before starting the vehicle for the first time after it has been parked for more than 3 hours, the vehicle should be powered on, the ignition switch "" should be turned on, and the fuel pump should be turned off to wait for the fuel pump to complete the fuel pressurization before starting the vehicle.

4. If the vehicle fails to start multiple times, the cylinder may have been flooded. The throttle should be turned to the bottom and the start button should be pressed for 3 seconds to perform the cylinder cleaning procedure.

5. If the low battery voltage indicator flashes, the battery should be charged in time; too low voltage may cause the electronic fuel injection components to not work properly, unable to start or difficult to start, insufficient power, etc.

6. When reinstalling the battery, when there is a sudden power failure during driving, abnormal idling, or when replugging the fuse, the electronic fuel injection system needs to be reset. The specific method is as follows:

Turn on the electric door lock switch and engine shutdown switch of the whole vehicle, turn off the engine shutdown switch for 60 seconds, and then power it back on.

7. Check or troubleshoot the EFI system note when a fault occurs:

a. After power is turned on, the components connected to the 12V power supply should not be removed at will to avoid the coil in the electrical appliance generating self-inductance and causing instantaneous voltage to damage the ECU or sensor.

b. Do not blindly disassemble and inspect when a fault occurs. First make sure that the mechanical part is normal before checking the electronic control part.

c. When diagnosing a fault, use a diagnostic instrument to read the fault code first or determine the fault code based on the flashing frequency of the fault indicator light, and conduct targeted inspections.

d. Pay attention to check whether each electronic fuel injection component is oxidized and whether the connection is reliable.

Tool：

MST—500Pro Diagnostic instrument	PT300EFI diagnostic instrument（16PIN）	Multimeter

●Both diagnostic instruments can read fault codes; the PT300 diagnostic instrument can be flashed with programs.

The driving conditions and maintenance status of each vehicle are different, so it is impossible to list all the fault phenomena and troubleshooting procedures. Only some of the more common faults can be listed. The maintenance personnel themselves also need to have certain professional knowledge and experience accumulation process.

If there is a " " symbol on the right side of the step, you can click it to quickly jump to the corresponding step.

WARNING

●Do not turn on the shutdown switch for new vehicles or vehicles that are about to run out of fuel. Be sure to add enough fuel before turning it on, otherwise the fuel pump will run idle without fuel and cause damage.

● Do not plug or unplug the plugs of various components at will, and it is forbidden to clean the plugs directly with water. Be sure to check whether they are plugged back in correctly after plugging or unplugging.

Fault Codes

Note:

●Unlock the vehicle and turn on the ignition switch. It is normal for the EFI fault light to be on when it is not started. If it is off, the vehicle cannot be started.

●After starting the vehicle, if the fault light is on and the EFI fault is reported, it means that there is an abnormality in the EFI system.

●When the EFI system reports a fault, continuing to drive the vehicle may cause damage. Please contact a qualified maintenance unit or our authorized maintenance point in time for investigation.

1. Read the fault code through the instrument

You can read the fault code directly in the instrument menu → fault information page, or read the fault code in the ZONTES Smart APP.

2. Read the fault code through the diagnostic instrument

Remove the seat cushion, take off the OBD interface protective cover on the left side and connect the OBD diagnostic instrument to read the fault code.

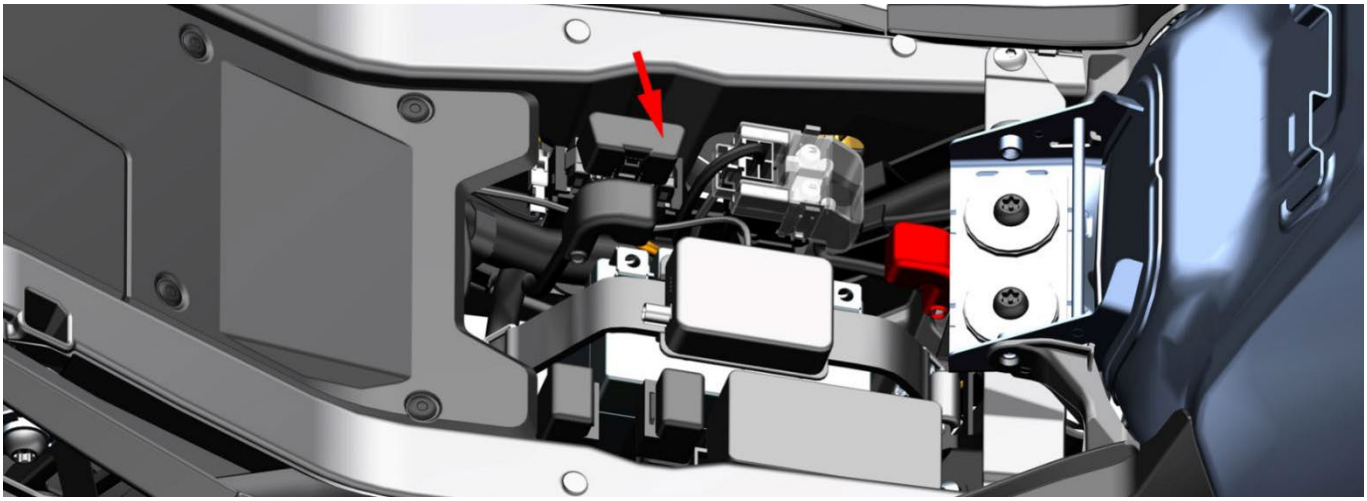

3. Common fault code information

2024 model

Code	Explanation	Code	Explanation
P0118	Cylinder temperature sensor circuit high voltage/open circuit fault	P0267	3 cylinder injector short circuit to low voltage/open circuit fault
P0117	Cylinder temperature sensor circuit low voltage fault	P0108	Intake air sensor circuit high voltage/open circuit fault
P0336	Crankshaft position sensor circuit signal interference fault	P0107	Intake air sensor circuit low voltage fault
P0335	Crankshaft position sensor circuit no signal fault	P0113	Intake air temperature sensor circuit high voltage/open circuit fault
P2300	1 cylinder ignition coil short circuit to low voltage/open circuit fault	P0112	Intake air temperature sensor circuit low voltage fault
P2303	2 cylinder ignition coil short circuit to low voltage/open circuit fault	P0132	The oxygen sensor signal before the cylinder is short-circuited to high voltage/open circuit fault
P2306	3 Cylinder ignition coil "C" shorted to low voltage/open circuit fault	P0131	1 cylinder front oxygen sensor signal short circuit to ground fault
P0123	Throttle position sensor short circuit to high voltage fault	P0138	2 cylinder front oxygen sensor signal short circuit to high voltage/open circuit fault
P0122	Throttle position sensor shorted to low voltage/open circuit fault	P0137	2 cylinder front oxygen sensor signal short circuit to ground fault
P0459	Carbon canister solenoid valve circuit short circuit to high voltage fault	P0152	3 cylinder front oxygen sensor signal short circuit to high voltage/open circuit fault
P0458	Carbon canister solenoid valve circuit short circuit to low voltage/open circuit fault	P0153	3 cylinder front oxygen sensor signal short circuit to ground fault
P0232	The fuel pump relay is short-circuited to high voltage fault	P0031	1 cylinder front oxygen sensor heater short circuit to low voltage/open circuit fault
P0231	Fuel pump relay short circuit to low voltage/open circuit fault	P0032	1 cylinder front oxygen sensor heater short circuit to high voltage fault
P1780	Quick discharge sensor failure	P0037	2 cylinder front oxygen sensor heater short circuit to low voltage/open circuit fault
P0262	1 cylinder injector short circuit to high voltage fault	P0038	2 cylinder front oxygen sensor heater short circuit to high voltage fault
P0261	1 cylinder injector short circuit to low voltage/open circuit fault	P0051	3 cylinder front oxygen sensor heater short circuit to low voltage/open circuit fault
P0265	2 cylinder injector short circuit to high voltage fault	P0052	3 cylinder front oxygen sensor heater short circuit to high voltage fault
P0264	2 cylinder injector short circuit to low voltage/open circuit fault	P0505	Idle speed control failure
P0268	3 cylinder injector short circuit to high voltage fault		

2026 model

Code	Explanation	Code	Explanation
P0105	Electrical fault of intake pressure sensor	P0353	Electrical fault in ignition coil of cylinder 3
P0110	Electrical fault of intake air temperature sensor	P0201	Electrical fault in injector of cylinder 1
P0115	Electrical fault of cylinder temperature sensor	P0202	Electrical fault in injector of cylinder 2
P0336	Crankshaft position sensor signal is unreasonable	P0203	Electrical fault in injector of cylinder 3
P0120	Electrical fault in the throttle position sensor of circuit 1	P0443	Electrical fault of carbon canister solenoid valve
P0220	Electrical fault of 2-way throttle position sensor	P0410	Electrical fault of secondary air injection valve
P2135	Throttle Position Sensor Signal Consistency Fault	P0230	Electrical fault in the fuel pump relay
P2100	Throttle body motor electrical fault	P0480	Fan relay electrical fault
P0638	Throttle position error	P1762	Electrical fault in the dump switch
P0121	1-way throttle position sensor rationality fault	P0914	Electrical fault in the gear position sensor
P0221	2-way throttle position sensor rationality fault	P060B	Error in the internal A/D conversion module of the ECU
P0130	Electrical fault of front oxygen sensor	P0604	RAM failure
P0030	Electrical fault in the front oxygen sensor heater	P0601	EEPROM Failure
P0225	Electrical fault of 1-way pedal position sensor	C001	CAN bus communication interrupted
P2140	Electrical fault of 2-way pedal position sensor	C121	CAN Bus ABS Signal Fault
P2130	Pedal Position Sensor Signal Consistency Fault	P0500	CAN bus front wheel speed signal fault
P0351	Electrical fault in ignition coil of cylinder 1	P1615	ROM verification failed
P0352	Electrical fault in ignition coil of cylinder 2	P1900	Quick switch sensor electrical fault

4. Clearing fault codes

After troubleshooting the EFI fault, it needs to be cleared manually or through a diagnostic instrument.

4.1 Manual Clear

a. Unlock the vehicle

b. Turn the flameout switch on and off five times or more continuously. If the electric burner does not light up when the flameout switch is turned on again, the reset is successful.

4.2 Clear using diagnostic instrument

The steps for different brands or models may vary, so please refer to the description in the diagnostic tool manual to clear the fault code.

WARNING

●If the fault light does not light up during engine operation and flashes after the engine is turned off, it is a historical fault and has no impact on the entire vehicle and will disappear on its own later.

EFI Parts

1	2	3	4	5	6
Tipping switch	OBD Diagnostic interface (main cable)	Fuel Pump	Carbon canister solenoid valve	Relay (KH-1A4T-R/normally open)	Fuel Injector
	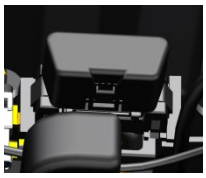				
7	8	9	10	11	12
Oxygen Sensor	Start relay	Water and oil common sensor	ECU	Throttle	Ignition coil
13	14	15			
Secondary air supply valve	Crankshaft Position Sensor	Air Filter Intake Temperature Sensor			

EFI parts layout drawing

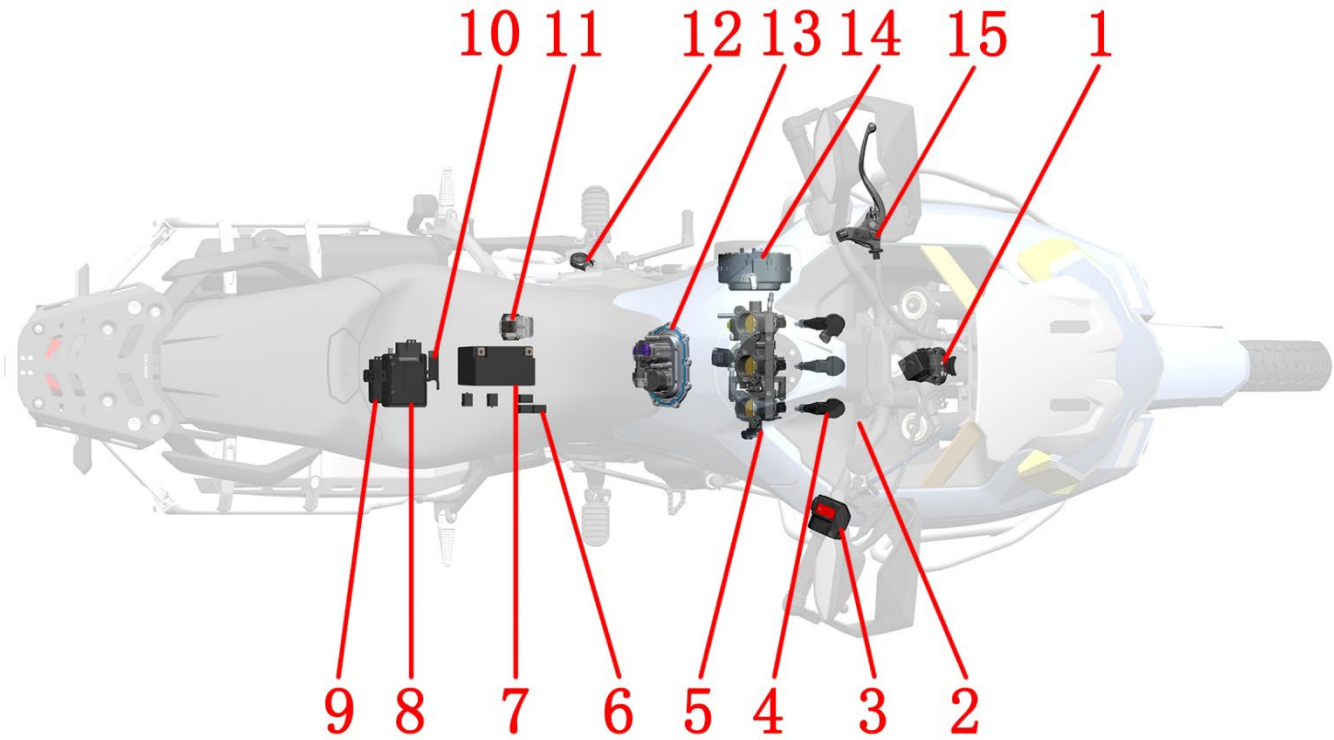

1-Faucet locks 2-Oxygen sensor 3-Right-hand handle switch 4-Ignition coil 5-Throttle assembly 6-Relays 7-accumulator8-PKE host 9-ECU 10-Tilt switch 11-Starting relay 12-Side bracket flameout switch 13- fuel pump 14-Magneto 15-Clutch rocker

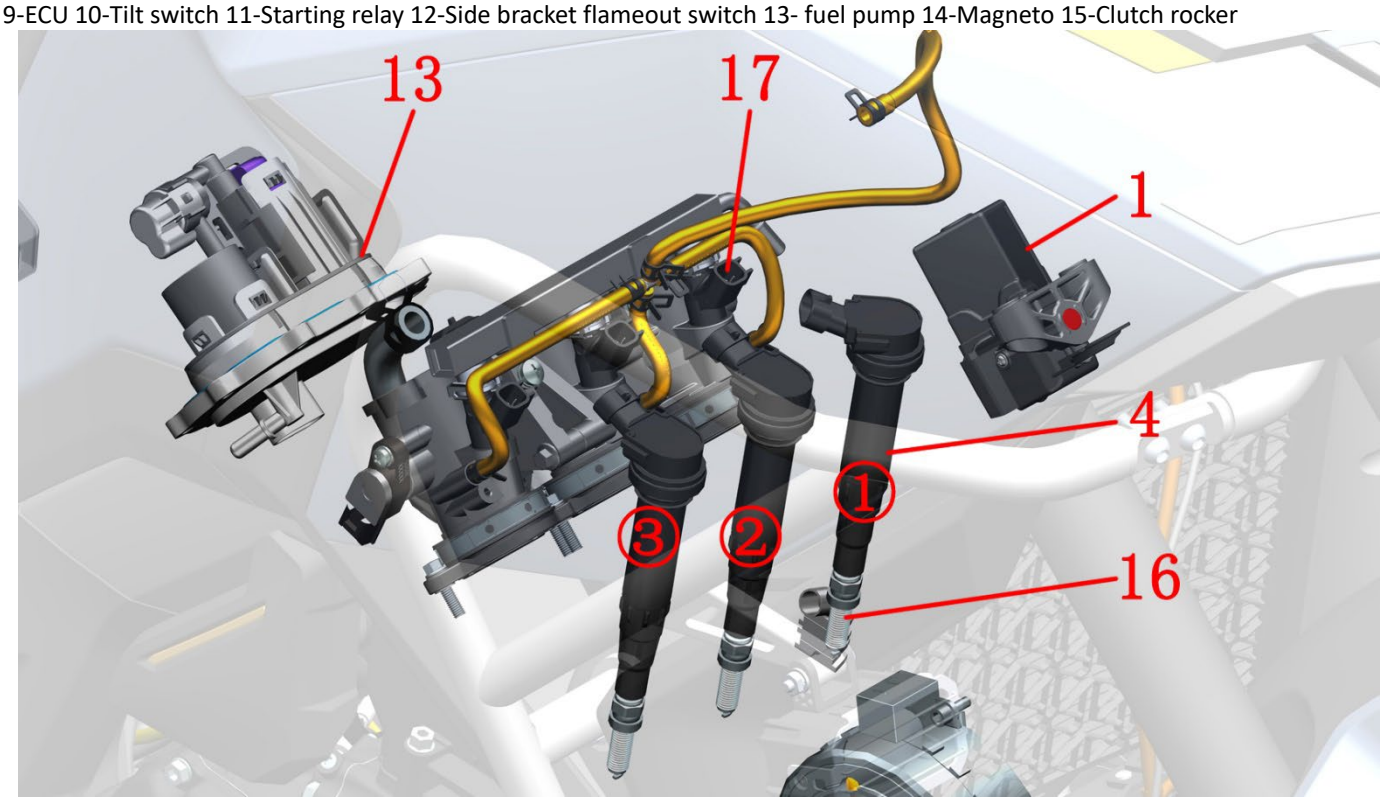

16-spark plug 17-Fuel injectors

Fault diagnosis and troubleshooting of EFI parts

Attention：

●Once the EFI parts are disassembled, the EFI system needs to be reset. For details, see the service information in this section.

●Fuel pumps, three-in-one sensors, stepper motors, ECUs and other precision parts may cause damage if disassembled without permission, and are not within the scope of the three guarantees due to human reasons.

●After disassembling the throttle valve body, the air outlet and intake manifold of the air filter should be sealed with a lint-free cloth or masking paper to prevent foreign matter from entering.

1. Tilt switch

Troubleshooting process

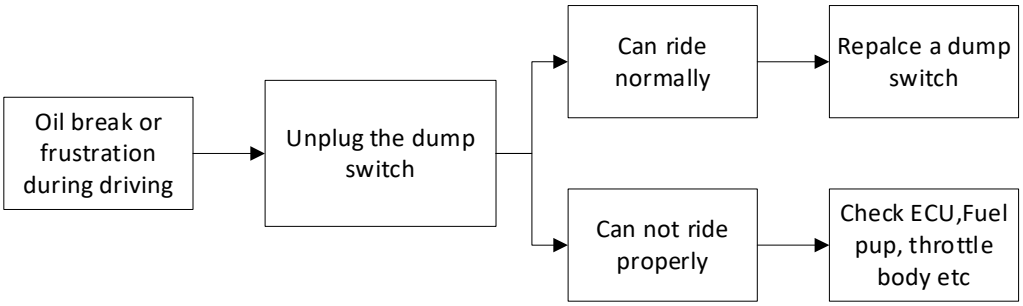

Disassembly

Remove the seat cushion first, remove the 4 expansion nails, and remove the cover.

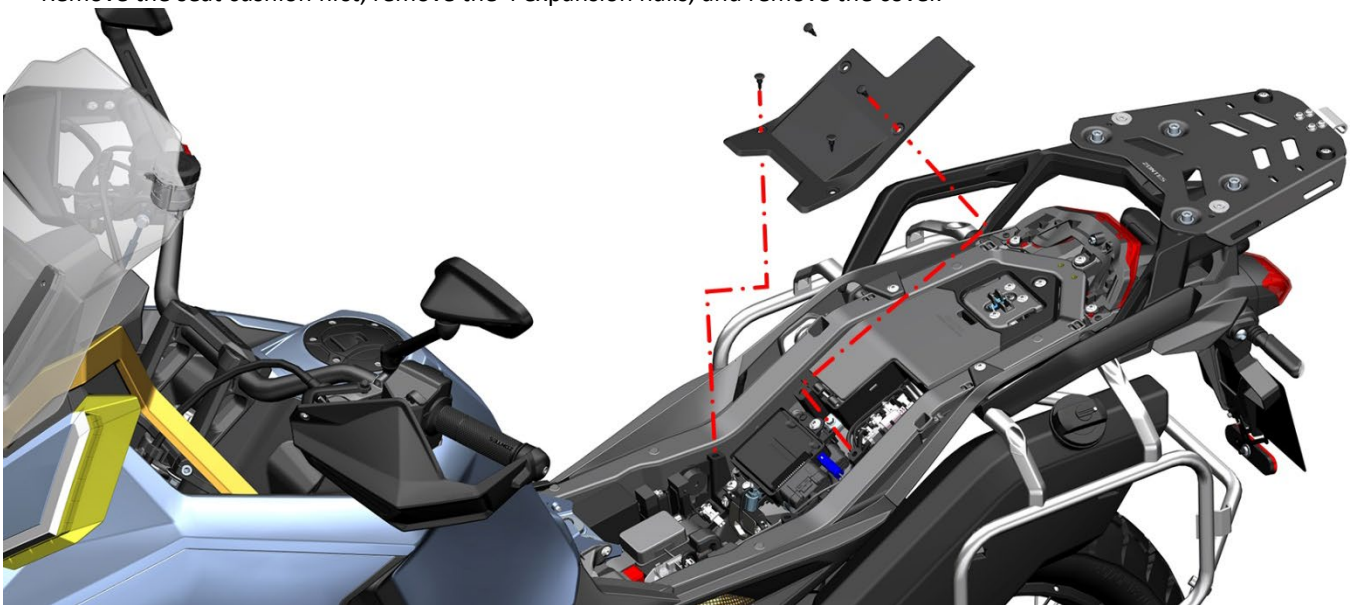

Press the anti-disengagement clip and pull the plug out. Use the 4# hexagon socket to remove the two bolts to remove the dump switch.

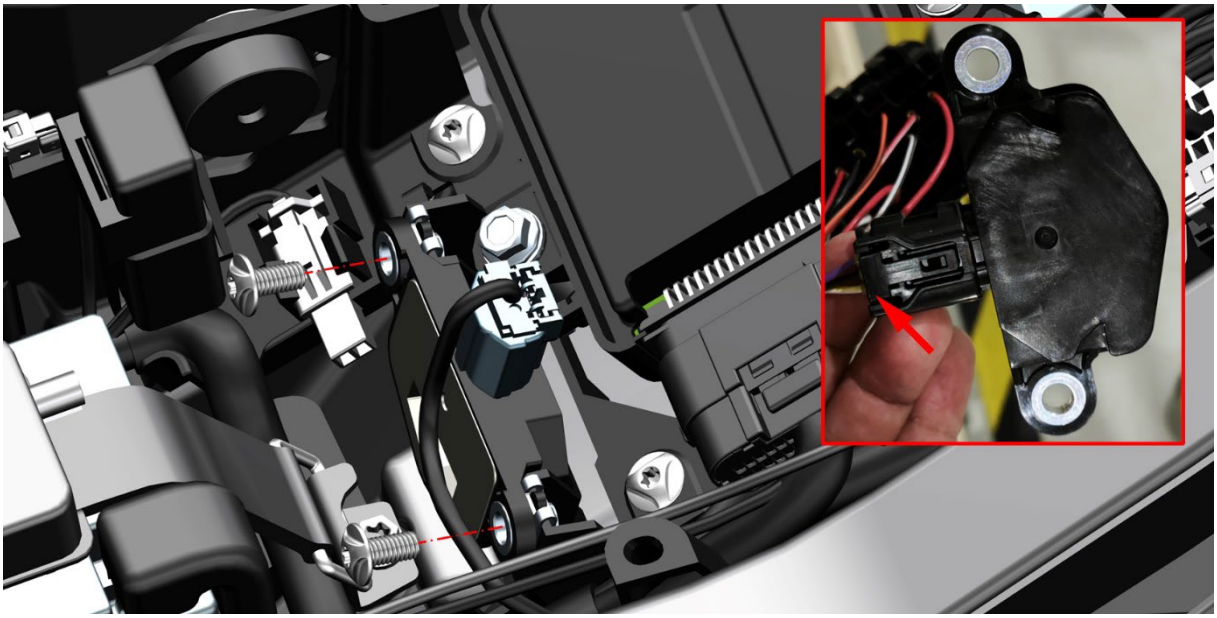

Check

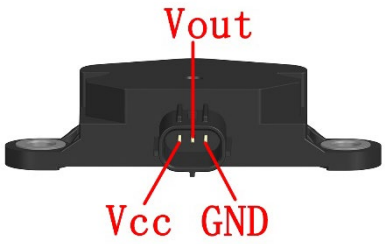

Remove the pour switch without disconnect the plug on.

Use the OBD diagnostic device to detect if the dump switch is faulty.

If there is no diagnostic instrument, use a multimeter to detect the output voltage to determine whether there is a fault.

standard：

Horizontal position：0.4-1.4V

About 60°：3.7-4.4V

Functional checks

Remove the dump switch without pulling the plug, place the dump switch horizontally and start the engine. Tilt the dump switch to the left or right by about 60°, the engine should be turned off for a short time, otherwise the dump switch is malfunctioning.

2. OBD interface

The main cable has its own OBD interface, the position is shown in the front, and the fault code is read through the diagnostic instrument. The diagnostic instrument can be used to read historical fault codes, current fault codes, clear fault codes, and read the status of the ECU using the diagnostic interface.

3. Fuel pump

Atttention：

●The fuel pump is a precision component, which needs to be assembled in a dust-free workshop and requires strict testing, so it is forbidden to disassemble it by yourself.

●The engine of this vehicle is designed with a high compression ratio, it is recommended to add 95# and above unleaded gasoline for a long time, in order to prolong the service life of the vehicle, please be sure to refuel at a regular gas station.

●It is forbidden to carry out the operation test of the fuel pump in the dry state or in the water, otherwise its service life will be shortened, and in serious cases, it will be directly damaged. The positive and negative wires of the fuel pump cannot be reversed. It is forbidden to disassemble the inlet filter, which can easily cause foreign matter to enter the fuel pump or block the injector.

●Dismantling the fuel pump or high-pressure fuel pipe should be carried out in a well-ventilated, dust-free or dust-free environment; Dangerous operations such as fireworks or mobile phone calls should be strictly prohibited in the dismantling site

When there is difficulty in engine starting or dust-free starting; Poor engine work, unstable operation, etc.; The injector does not inject fuel; When the engine is running weakly and the acceleration performance is deteriorating, it is necessary to check whether the fuel pump is abnormal.

Refer to the steps in this manual to remove the fuel tank assembly and high-pressure fuel pipe. Refer to the section "Maintenance - Fuel Line - Fuel Pump" to measure the fuel pressure using an fuel pressure gauge, or a simple test method to test whether the fuel pump is normal.

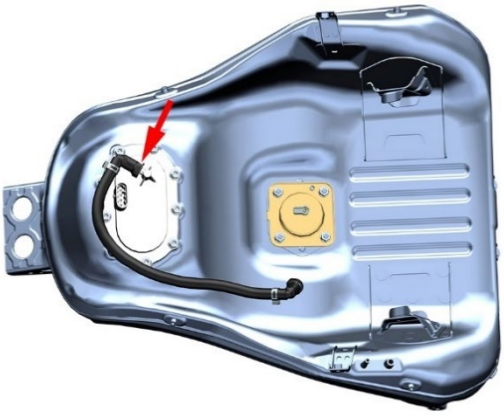

When disassembling and assembling the fuel tank, after removing the fixing screws of the fuel tank, you must first gently lift it from the tail of the fuel tank, raise it until your hand can just reach into it, and then pull out the high-pressure fuel pipe connected to the oil pump.It should be noted that the high-pressure fuel pipe cannot be pulled hard, and you must first press and hold the buckle on the high-pressure fuel pipe joint (as shown below),Then pull it out along the direction of the fuel outlet, otherwise it is easy to pull and break the fuel outlet of the fuel pump.

Note that you should not press the fuel outlet pipe shown in the red circle, and once damaged, you can only replace the entire fuel pump assembly.

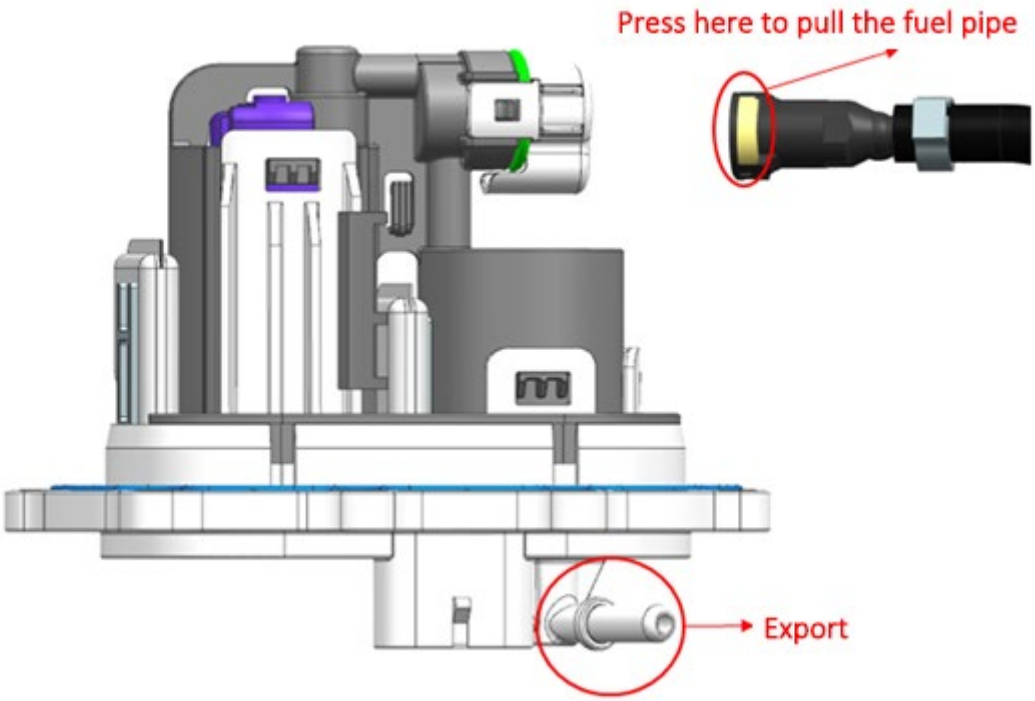

If the fuel pump needs to be removed from the vehicle, the fuel tank can be emptied with a suction pump. Flip the fuel tank assembly to the back and remove the 9 bolts with the 10# or 8# (some vehicles produced form the end of June to the end of August 2025) sleeve to remove the fuel pump.

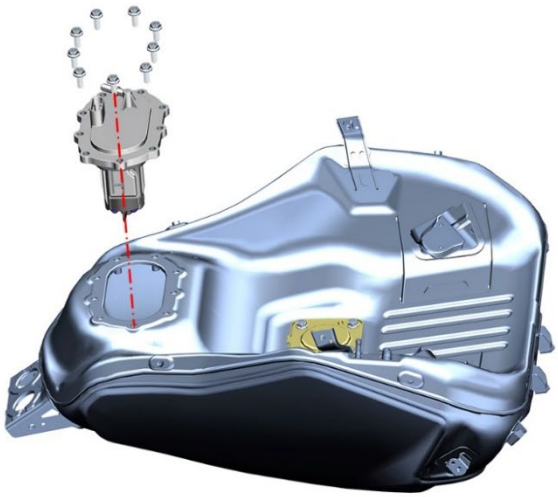

Note that you should not press the fuel outlet pipe shown in the red circle, and once damaged, you can only replace the entire fuel pump assembly.

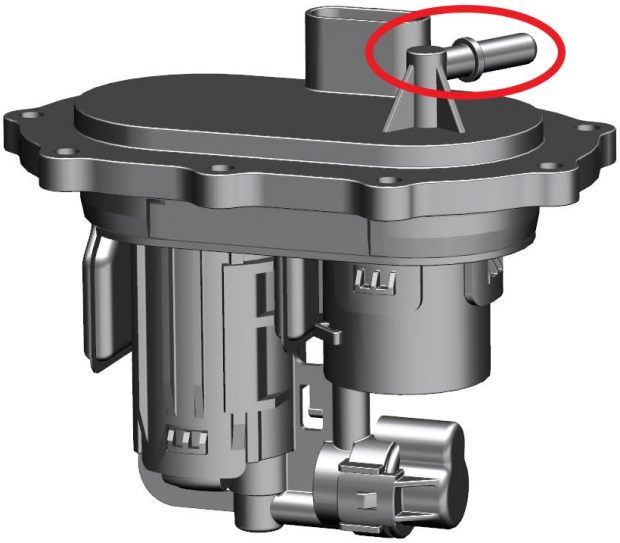

When reassembling, it is necessary to pre-tighten diagonally first, and then tighten 9 bolts, otherwise the uneven compression of the sealing ring of the fuel pump will easily lead to leakage and potential safety hazards.

4. Canister solenoid valve

When the vehicle malfunction indicator light comes on and reports fault code 0443, please check as follows:

1. Check whether the appearance of the charcoal canister solenoid valve has been impacted by external force, cracked, or if the plug is loose or fallen out. After checking and confirming no issues, unplug the charcoal canister solenoid valve plug with the vehicle turned off, and check whether the sensor pins are skewed or missing.

2. Turn off the vehicle, unplug the charcoal canister solenoid valve plug, and measure the resistance between the two pins. As shown in the figure, at 20°C, the normal resistance is 32±2Ω. If the measured resistance is infinite, it indicates that the sensor is open-circuited and needs to be replaced.

3. When fault code 0443 for circuit signal malfunction is reported, please re-plug the vehicle's main relay to check, ensure that the relay pins are not corroded or fallen off, and then use a diagnostic tool to clear the fault code. If the fault still exists, please use a multimeter to check whether the blue-black wire of the solenoid valve cable plug is connected to the blue-black end of the ECU cable plug, and ensure that the corresponding ECU pins are not missing, skewed, or have other defects.

4. If the above inspections do not meet the standards, this part needs to be replaced; otherwise, please check whether the cable connecting the sensor is damaged or broken.

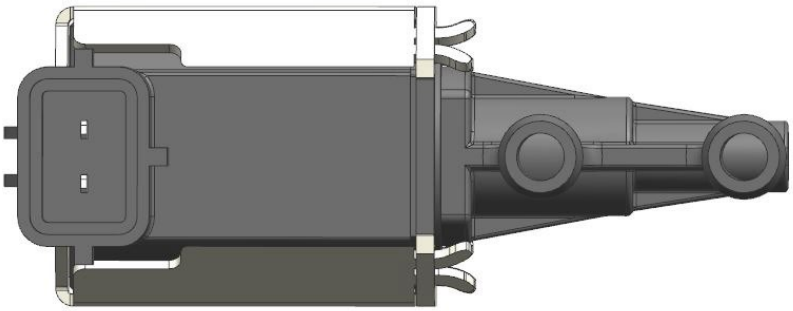

5. Relay (KH-1A4T-R)

Remove the seat cushion and find the fuse box next to the battery. 3 pieces of relays are visible after removing the protective cover in the fuse box; The other 2 are in the sheath near the fuse box and need to be removed before they can be removed. As shown in the figure below:

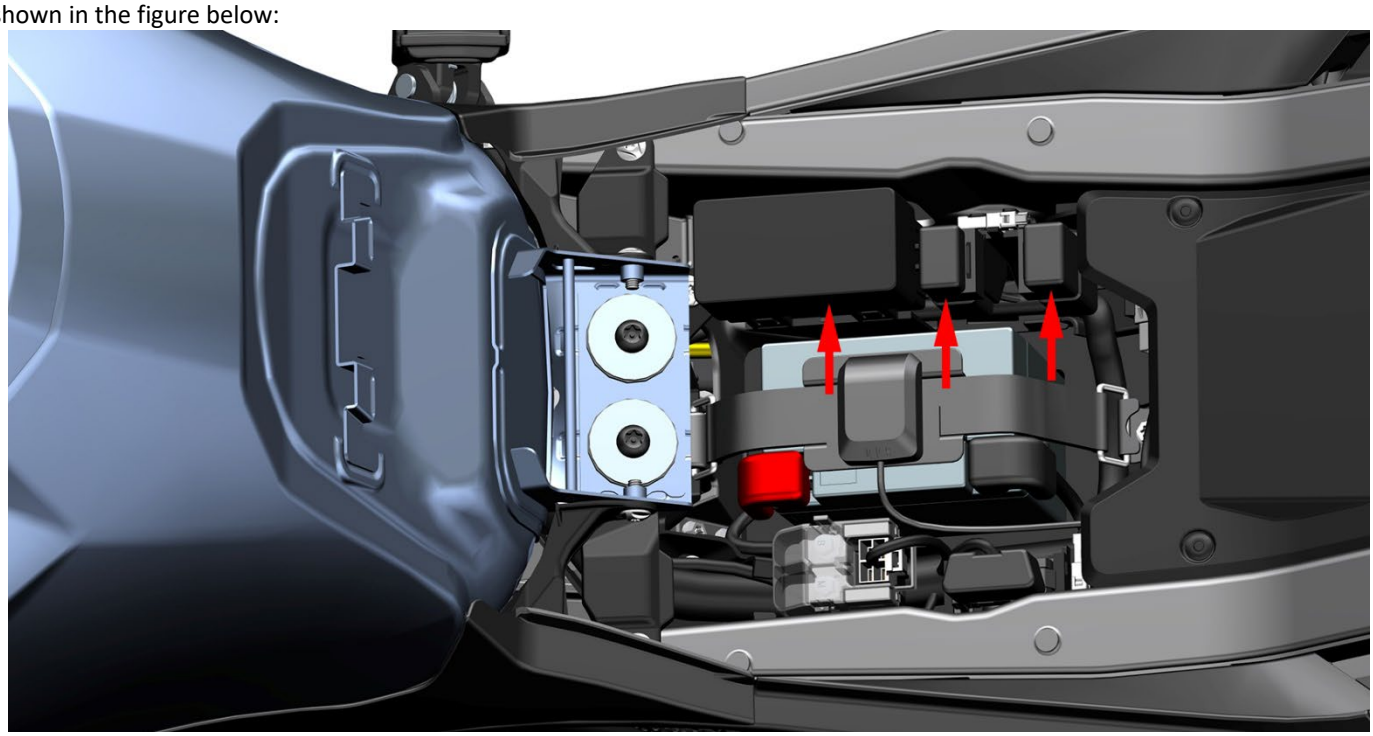

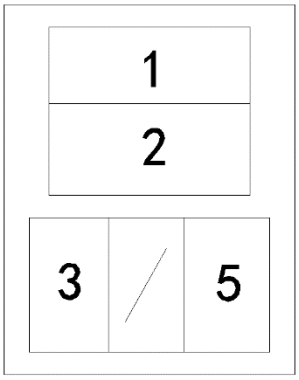

Cable endsRelay

After pulling out the relay, use the buzzer of the multimeter to measure that pins 1 and 2 should be normally open, and the buzzer of the multimeter bee will not sound at this time; Power on pins 3 and 5, measure pins 1 and 2 again, and the buzzer of the multimeter bee will sound normally. Otherwise, it can be judged as a relay failure.

6. Injector

When the engine idle speed is unstable, easy to stall, or can not start, it is necessary to check whether the injector is normal when reporting the injector failure.

It is necessary to remove the seat cushion, fuel tank, air filter, etc. first.

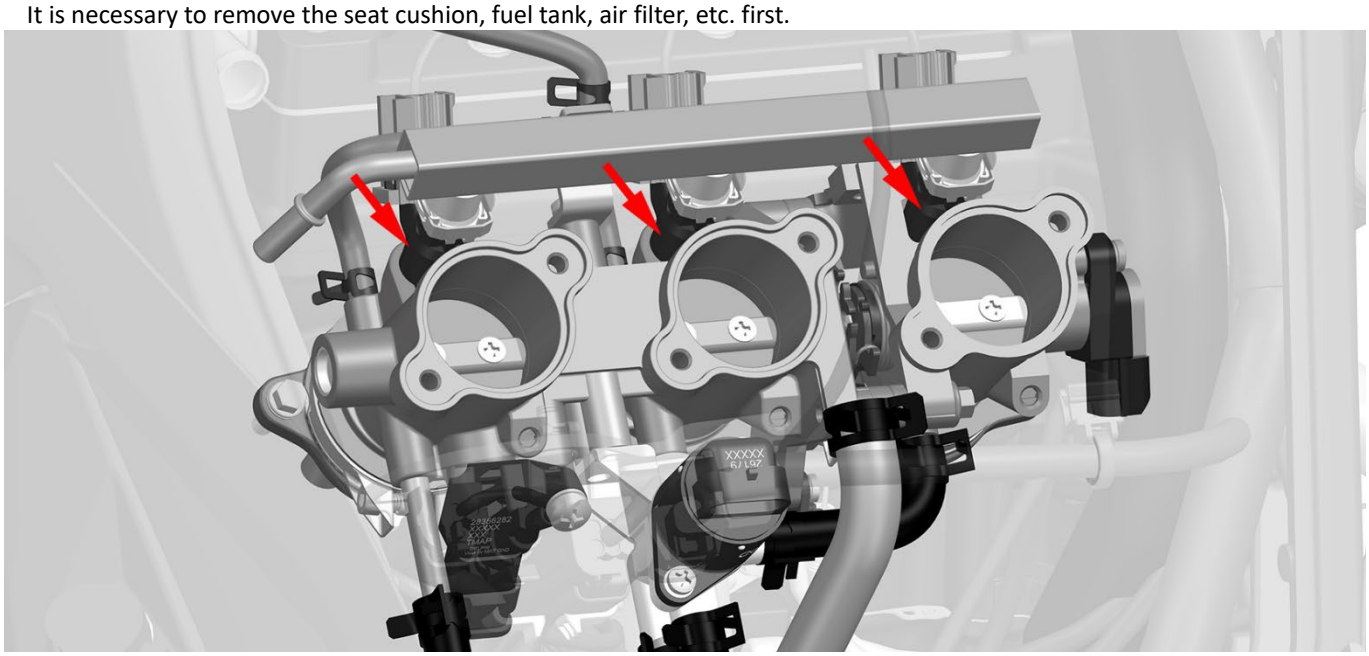

It can be judged by the following methods：

a. Start the engine when the vehicle is parked securely and cause the engine to idle. With the help of a stethoscope needle or stethoscope to listen to the working sound of the cylinder, you should be able to hear the rhythmic working sound of the injector, and its sound is crisp and even, then it works normally. If the sound is low or cannot be heard, you need to remove the injector for inspection. Or when the injector plug is unplugged, the engine stalls to indicate that the injector is normal.

b. Press the anti-release latch, slide outward, and then pull out the plug.

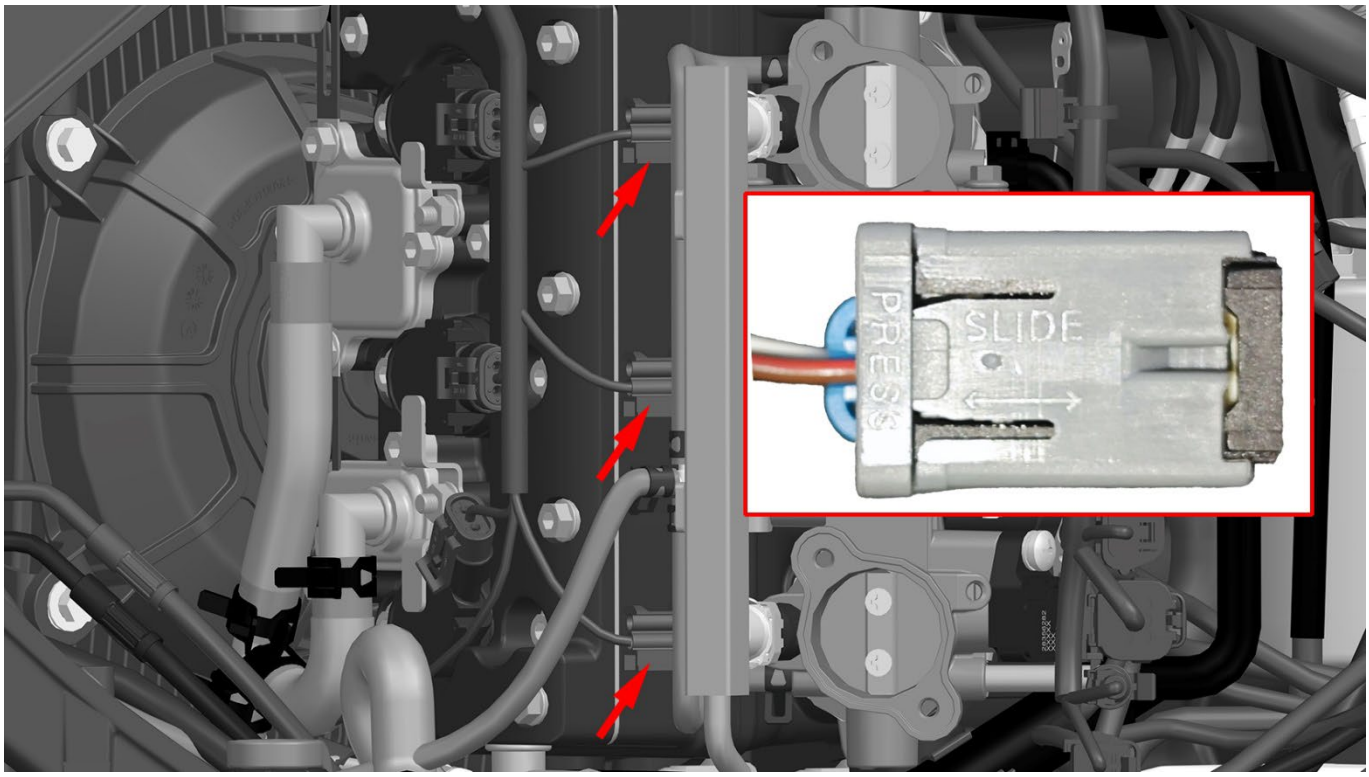

When the vehicle malfunction indicator light comes on and reports fault codes such as 0201 (Cylinder 1 injector malfunction), 0202 (Cylinder 2 injector malfunction), 0203 (Cylinder 3 injector malfunction), etc., the following inspection methods should be followed.

1. Check whether the injector's appearance has been impacted by external force, cracked, or if the plug is loose or fallen out. After confirming no issues, unplug the injector plug with the vehicle turned off, and check whether the injector pins are skewed or missing.

2. Turn off the vehicle, unplug the injector plug, and measure the resistance between the two pins. At 20°C, the normal resistance is 12.5±0.6Ω. If the resistance measurement is infinite, it indicates a sensor open circuit (Fault Code 0201), and replacement is required.

3. After confirming no issues with the resistance, if the fault still exists, please unplug and re-plug the vehicle's main relay to ensure that the relay pins are not corroded or fallen off. Then, use a diagnostic tool to clear the fault code. If the fault still persists, use a multimeter to check whether the brown wire from the injector cable plug to the ECU cable plug is connected, and ensure that the corresponding ECU pins are not missing, skewed, or have other defects.

4. If the above inspections do not meet the standards, this part needs to be replaced; otherwise, please check whether the cable connecting the sensor is damaged or broken.

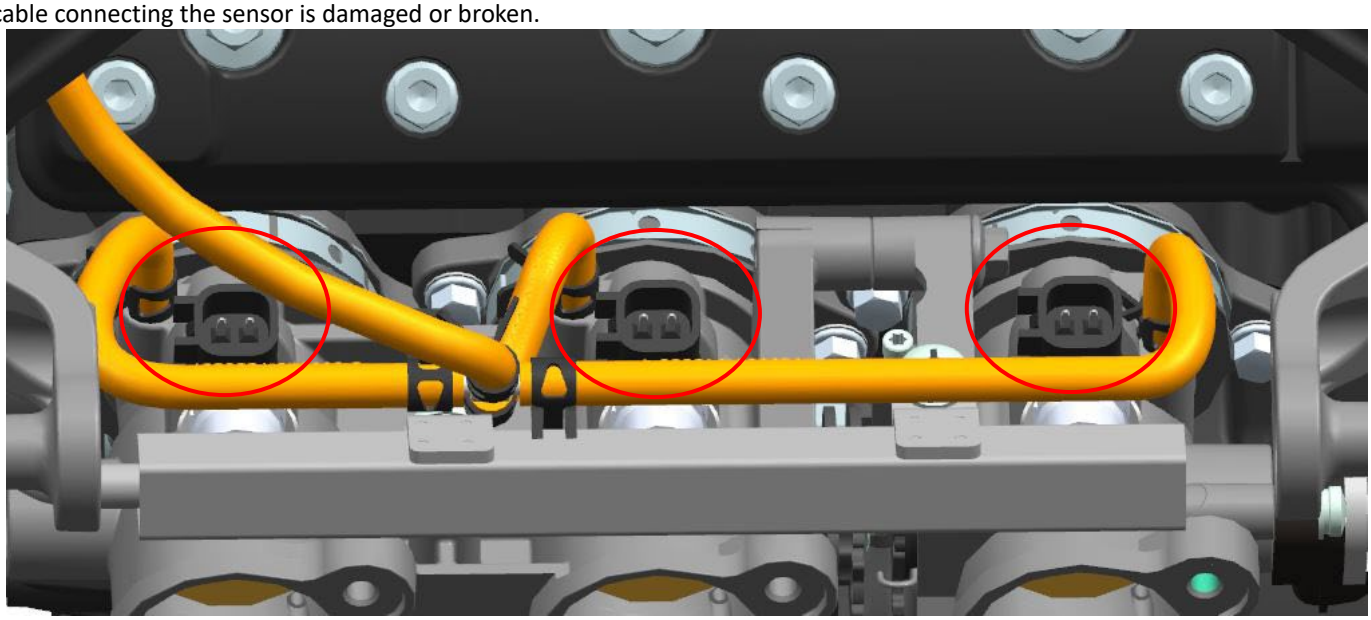

If you need to replace the injectors, wait until the engine and muffler have cooled down. Use a Phillips screwdriver to remove the two screws that hold the slide rails in place, and remove the rails and injectors together. Use a flathead screwdriver to pry open the clip of the injector to remove the injector.

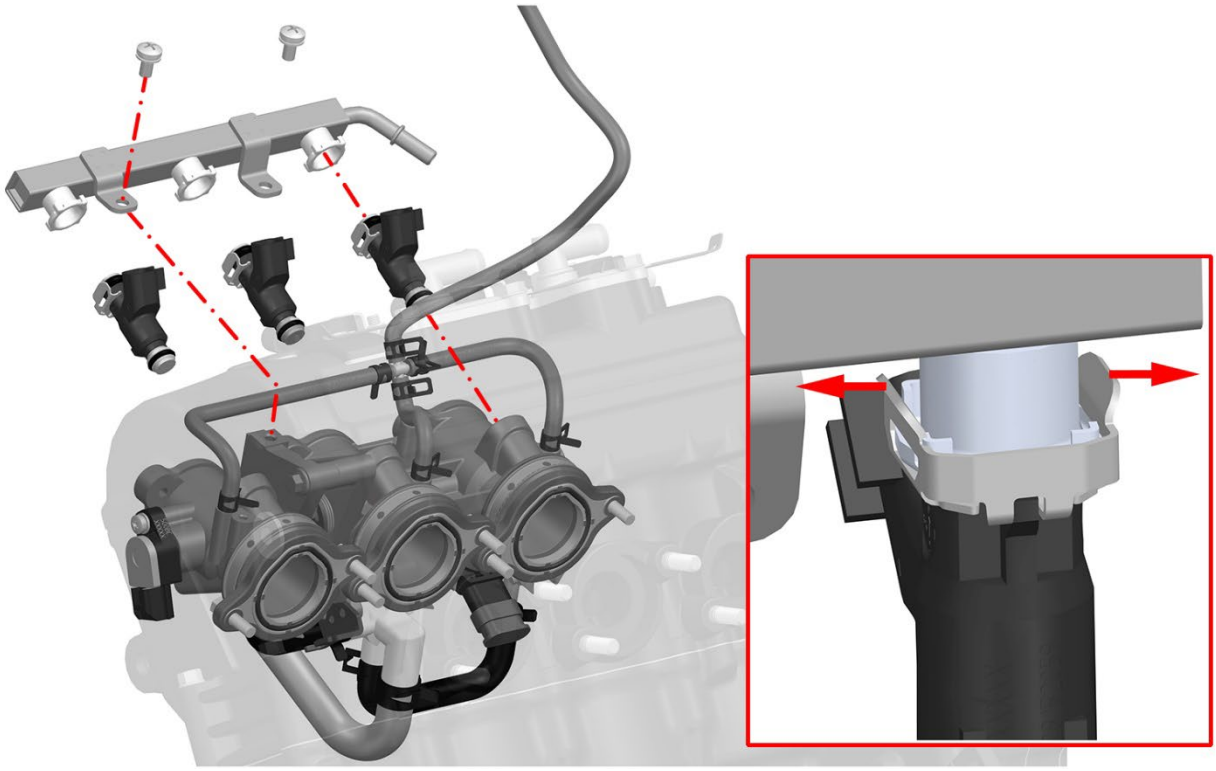

7. Oxygen sensor

WARNING

●Always wait until the engine and muffler have cooled completely before removing the oxygen sensor.

When the instrument shows that the oxygen sensor is faulty, the engine performance is poor, the idle speed is unstable, and the fuel consumption is high, the oxygen sensor needs to be checked. The fault code can be read by the diagnostic instrument to confirm whether the oxygen sensor is faulty.

7.1 Detect

When there is a fault code of the oxygen sensor heater, try to clear the fault code with a diagnostic instrument first, if it is cleared, the ignition is started more than four times, and there is no need for the next step to deal without the recurrence of the fault. If the fault persists, you need to remove the cover and check the resistance of the oxygen sensor. As shown in the figure below, if the fault code shows 1 cylinder, remove the left cover, and you can see the oxygen sensor connection plug. If the oxygen sensor of the 2nd and 3rd cylinders is faulty, the right side cover will be removed.

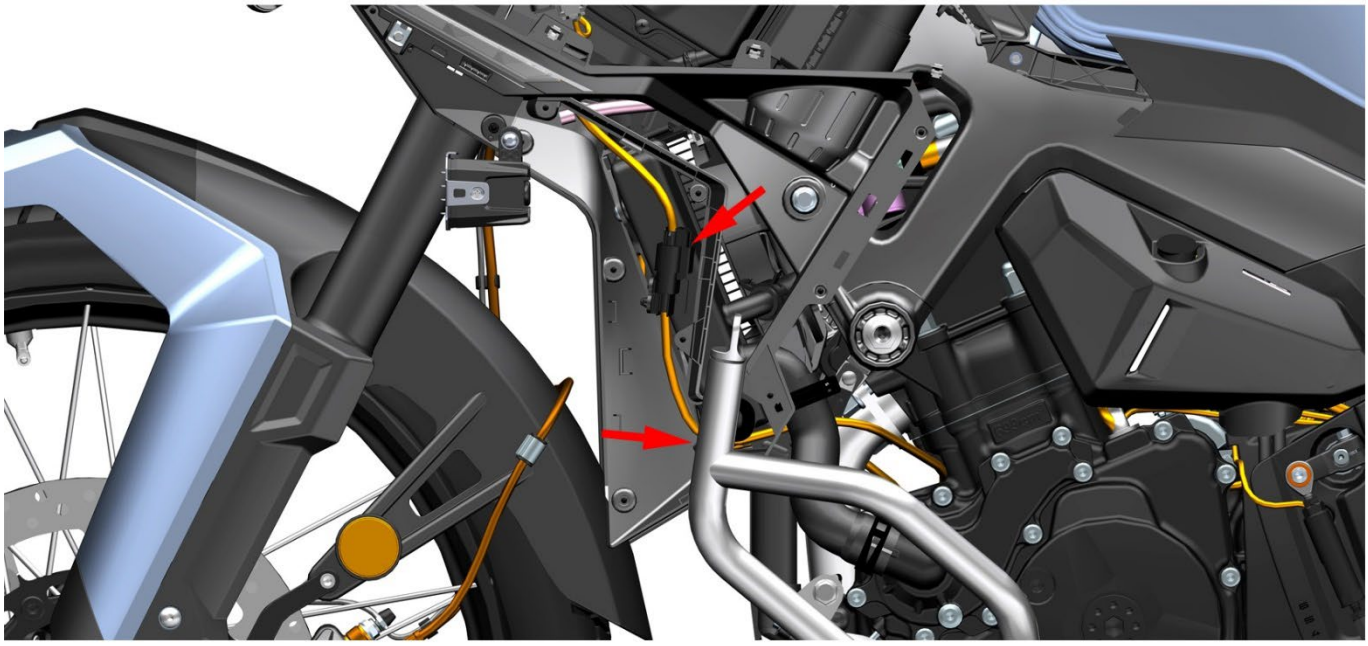

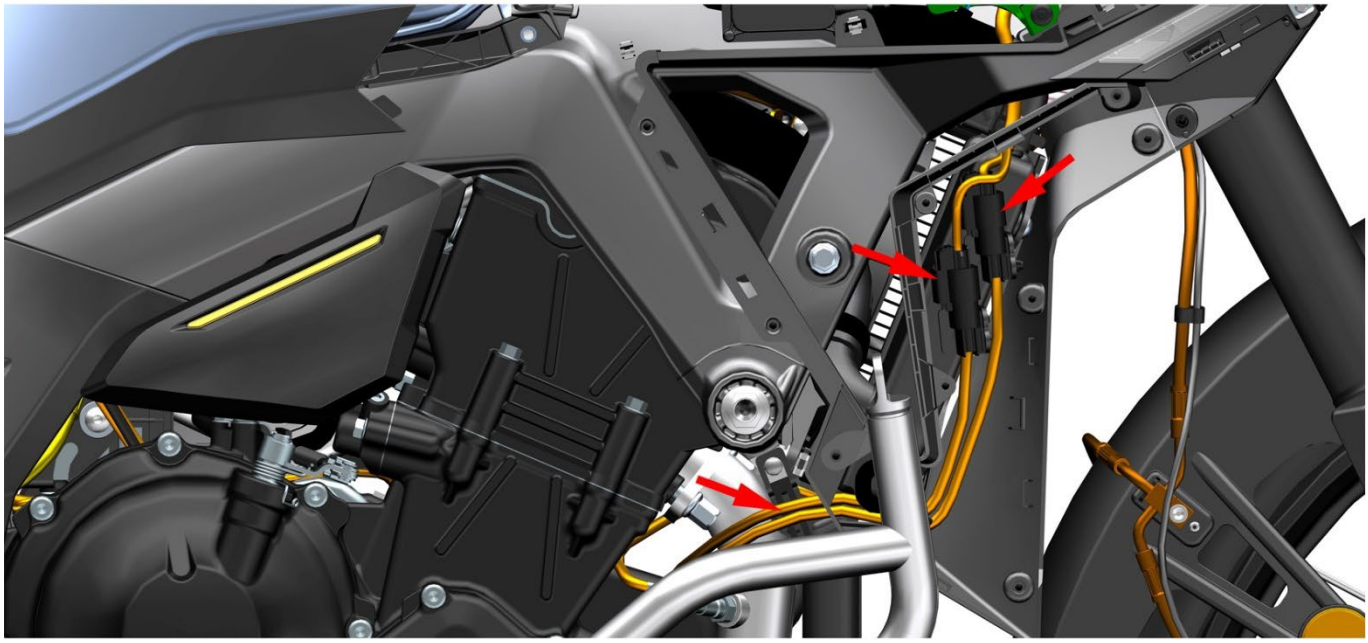

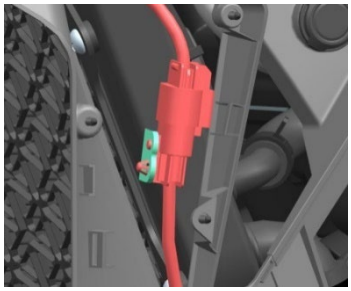

After removing the cover, you can see that the oxygen sensor is fixed as shown in the figure above, squeeze the mushroom head out of the fixing hole.

When the vehicle malfunction indicator light comes on, reporting 0030 (front oxygen heater malfunction) and 0130 (front oxygen signal malfunction), the following inspection methods should be followed:

1. Check the appearance of the oxygen sensor for external impact, cracking, and whether the plug is loose or fallen out. After the inspection is correct, unplug the oxygen sensor plug in the shutdown state, and check whether the sensor pins are skewed or missing.

2. Turn off the vehicle, unplug the oxygen sensor plug, and measure the resistance between pins A and B. For a normal oxygen sensor, the resistance between the two pins is 18±3Ω. When the vehicle reports a 0030 oxygen sensor heating open circuit malfunction, the resistance will be infinite. Remember to reconnect the plug after the inspection.

3. When reporting an oxygen sensor signal malfunction, a diagnostic tool needs to be used to read the engine parameters for judgment. Turn on the vehicle, open the ignition switch, start the engine at idle, select the EFI system matching the current vehicle model to enter, and check the voltage parameter of the cylinder 1 oxygen sensor. Under normal circumstances, the voltage will fluctuate between 0 and 1V. If the voltage remains unchanged for a long time, turn off the vehicle, remove the ECU plug, and check whether the ECU pins are skewed or missing. If there are any abnormalities, replacement is required. Then use a multimeter to check whether the gray and white-yellow wires of the oxygen sensor plug are connected to the gray and white-yellow wire pins of the ECU. If there is a disconnection, check whether the cable is damaged or broken.

4. If the above troubleshooting does not meet the standards, this part needs to be replaced; otherwise, check whether the cable connecting the sensor is damaged or broken.

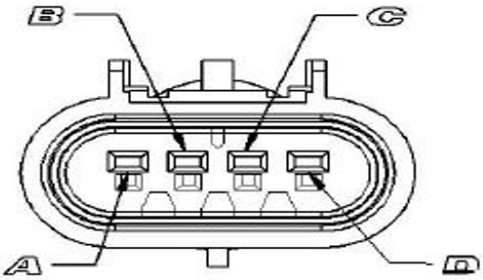

Note: The ceramic inside the oxygen sensor is hard and brittle, it is forbidden to use a hard object to knock or blow with strong gas, otherwise it will easily cause damage.

7.2 Replace

Take out the cover according to the above operation, take out the fixing buckle, unplug it, and then use a 17# open end wrench to remove the oxygen sensor counterclockwise from the muffler tube. Clean the mounting surface before installation.

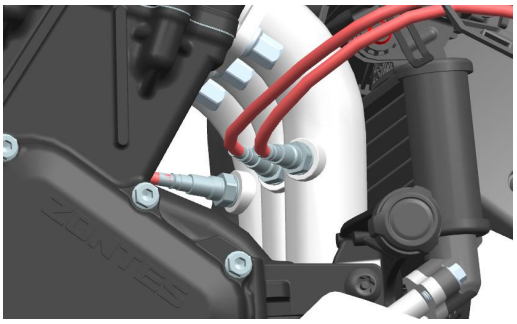

The new sensor threads are coated with a special paste thread anti-sintering agent to prevent air leakage and facilitate subsequent re-disassembly. If the old inspection is fine, it is necessary to apply an appropriate amount of anti-sintering agent to the thread before installation.

Torque standard： 18±1.5N.m.

The oxygen sensor thread is:M12×1.25.

8. Starting relay

For details, see the section on Starting Relays in the chapter "Starting Systems".

9. Water and oil share sensors

When the malfunction indicator light on the instrument comes on, if the displayed fault information shows fault codes 0118 (2024 model) or 0115 (2026 model), please check as follows:

1. Check the appearance of the temperature sensor for any signs of external impact, cracking, and whether the plug is loose or has fallen out. After checking and confirming no issues, unplug the temperature sensor plug while the vehicle is turned off, and check whether the sensor pins are skewed or missing.

2. Turn off the vehicle, unplug the temperature sensor plug, and measure the resistance between the sensor pins. As shown in the figure, at 30°C, the normal resistance between the two pins of the temperature sensor is 1.74 - 1.89 KΩ. The resistance table corresponding to different temperatures is on the right. The temperature measured by the water temperature sensor is equivalent to the engine coolant temperature. Remember to reconnect the plug after the check.

3. When fault code 0116 is reported, since it is an open-circuit fault, the detected resistance will be infinite. In this case, replacement is required. Another situation is cable damage, where the resistance is normal but the fault code cannot be cleared, and the cable needs to be checked for abrasion.

4. If the above inspections do not meet the standards, this part needs to be replaced; otherwise, please check whether the cable connecting the sensor is damaged or broken.

The water and oil share sensor is located in the middle cylinder position of the engine, and the two-pin resistance of the sensor is detected after the plug is removed. The auxiliary tank needs to be removed and then remove the water and oil share sensor. Pinch the top of the plug first, press the anti-disconnection card, and then pull the plug outward.

Temperature ℃	Resistance kΩ		
	MIN.	NOM.	MAX.
−30	23.4900	25.1600	26.9400
−25	18.1900	19.4300	20.7500
−20	14.2000	15.1300	16.1100
−15	11.1800	11.8700	12.6100
−10	8.8600	9.3910	9.9490
−5	7.0750	7.4800	7.9050
0	5.6870	5.9990	6.3260
5	4.6020	4.8430	5.0960
10	3.7470	3.9350	4.1310
15	3.0690	3.2160	3.3700
20	2.5280	2.6440	2.7650
25	2.0940	2.1860	2.2810
30	1.7430	1.8170	1.8920
35	1.4590	1.5180	1.5780
40	1.2270	1.2740	1.3220
45	1.0370	1.0750	1.1130
50	0.8798	0.9104	0.9417
55	0.7499	0.7748	0.8002
60	0.6419	0.6621	0.6828
65	0.5516	0.5682	0.5850
70	0.4759	0.4895	0.5032
75	0.4121	0.4232	0.4345
80	0.3581	0.3673	0.3766
85	0.3123	0.3199	0.3275
90	0.2733	0.2796	0.2859
95	0.2399	0.2451	0.2503
100	0.2113	0.2156	0.2199
105	0.1862	0.1902	0.1942
110	0.1646	0.1683	0.1721
115	0.1459	0.1494	0.1529
120	0.1297	0.1329	0.1362
125	0.1156	0.1186	0.1217
130	0.1033	0.1061	0.1090
135	0.0926	0.0952	0.0979
140	0.0832	0.0856	0.0881
145	0.0749	0.0771	0.0795
150	0.0676	0.0697	0.0719
155	0.0611	0.0631	0.0651
160	0.0554	0.0573	0.0591
165	0.0503	0.0521	0.0538
170	0.0458	0.0474	0.0491
175	0.0418	0.0433	0.0449
180	0.0382	0.0396	0.0411
185	0.0350	0.0363	0.0377
190	0.0321	0.0334	0.0346
195	0.0295	0.0307	0.0319
200	0.0272	0.0283	0.0294

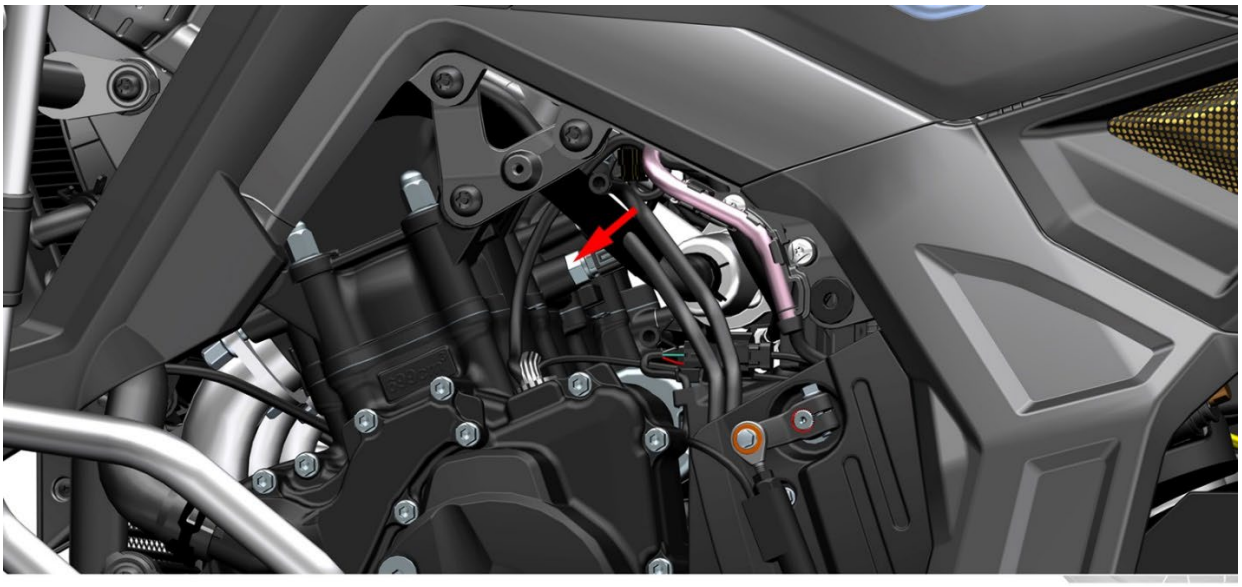

Use a multimeter with two pins of room temperature resistance values：3.74～1.22kΩ（10～40℃）；1.22～0.27kΩ（40～90℃）.

Due to limited space, it is recommended to use a 72-tooth 17# ratchet torx wrench counterclockwise to remove the water and oil common sensor and remove the 9×2 EPDM O-ring. When reassembling, need to replace the O-ring with a new one to avoid leakage.

Standard torque：13±1.5N.m (1.3±0.2 kgf.m,10±1 lbf.ft)

10. ECU

When the engine cannot be started, the fault light is not lit after the ignition switch is pressed, and the EFI system is not powered on. First, check whether the ECM fuse is burned and whether the main relay is engaged. Because the ECU is complex and difficult to judge, the elimination method can generally be used, remove the ECU from the normal vehicle of the same model and replace it with the faulty vehicle.

Remove the seat cushion, remove the 4 expansion nails and remove the cover. Use T25 and 10# sleeves to remove the bolts that fix the PKE host, remove the flanging bushing and buffer glue, and install the PKE bushing. Move the PKE host out of the way. Pull out the ECU after removing the PKE mounting bracket with the 8# sleeve.

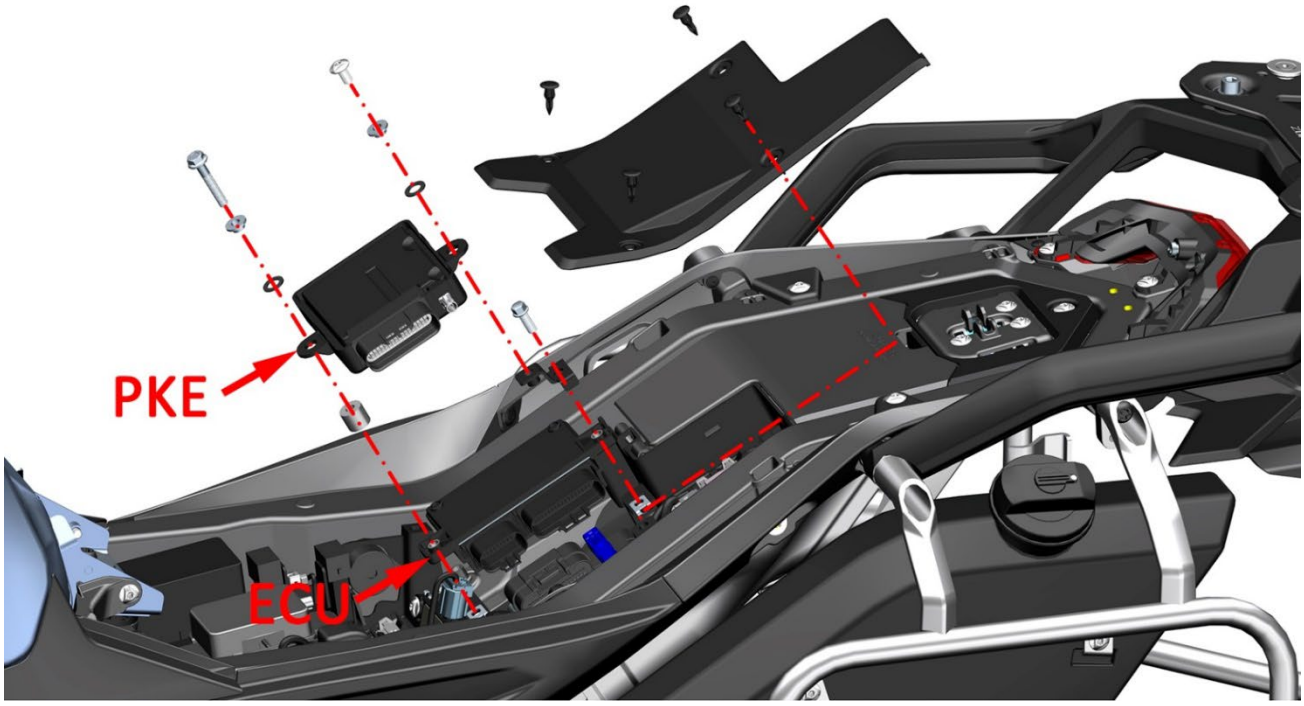

Note: To replace the ECU, you need to shut down the whole vehicle and wait for 10 seconds before operating to avoid the abnormality of the EFI system.

11. Throttle body

11.1 Common fault signs

1. During riding, the fault light is on, and there are fault codes related to the intake pressure, temperature, and throttle position sensors.
2. It cannot be started by ignition, the idle speed of the start is too low or too high, unstable, etc.
3. There is a certain position or overall stuckness during the rotation of the throttle handlebar

11.2 Disassembly

It is necessary to follow the steps described above, remove the fuel tank and air filter after shutting down, and unplug the electrical device plug, rubber pipe, and high-pressure fuel pipe connected to the throttle. Then use a long 4# Allen wrench to loosen the three pipe clamps that hold the throttle and the intake manifold into the appropriate position, and then the throttle can be removed as a whole.

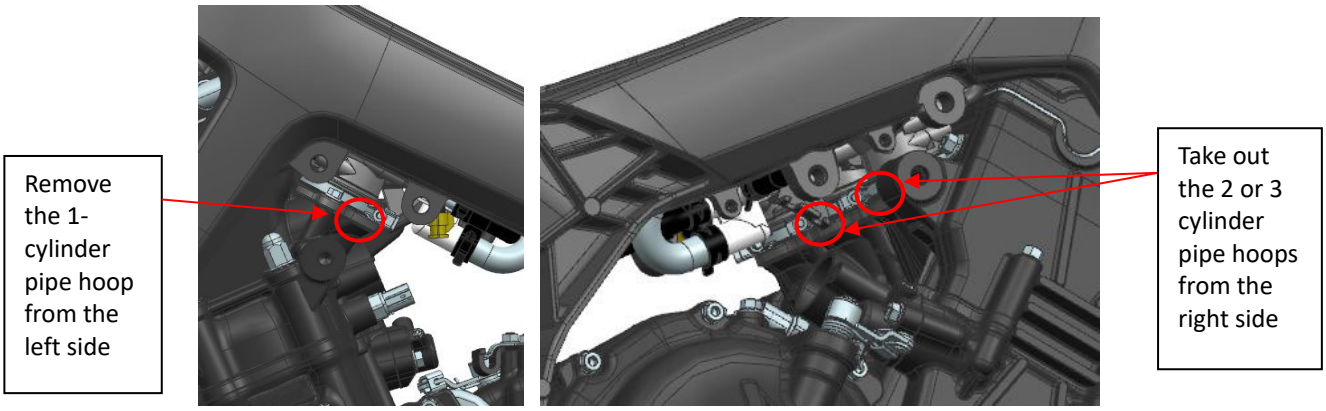

11.3 Troubleshoot the process

2024 model

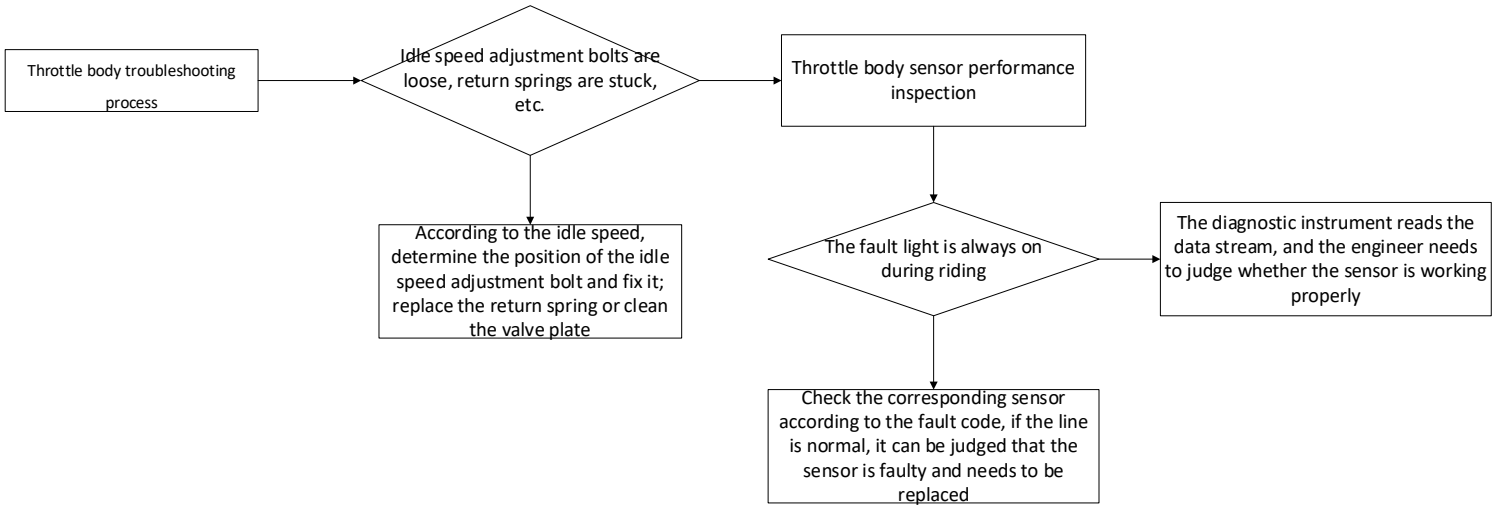

2026 model

When the vehicle malfunction indicator light comes on and any of the fault codes 0120, 0220, or 2100 is reported, the following steps should be taken for inspection:

1. Check the appearance of the throttle motor module for any signs of external impact, cracking, and whether the plug is loose or fallen out. After confirming that there are no issues, unplug the throttle motor plug with the vehicle turned off, and check whether the sensor pins are skewed or missing.

2. After confirming that there are no abnormalities in the above steps, remove the throttle. After unplugging the motor plug, if the vehicle reports fault code 0120, measure the resistance between pins 1 and 6; if the vehicle reports fault code 0220, measure the resistance between pins 4 and 6, both of which should be 9.9 kΩ. If the vehicle reports fault code 2100, measure the resistance between pins 3 and 5, which should be approximately 17.5 Ω. If the resistance does not meet the standard, the throttle body needs to be replaced (resistance is affected by the current temperature, and some deviation is normal). Remember to reconnect the plug after the inspection.

3. For those with a diagnostic instrument, connect to the OBD port for troubleshooting. Turn off the ignition switch without starting the engine, use the diagnostic instrument to read the engine parameters for judgment, select the EFI system that matches the current vehicle model to enter, and increase the throttle from idle to full open. The normal data should be: the voltage signal of the throttle on channel 1 will increase from 0.5 ± 0.2 V to 4.6 ± 0.2 V. If it does not meet the standard, perform the inspection as described above.

4. If the above troubleshooting does not meet the standard, this part needs to be replaced. If the measurement is normal, check whether the cables connecting the sensor are damaged or broken.

PIN Definition	
1	TPS 1
2	+5V
3	M+
4	TPS 2
5	M-
6	GND

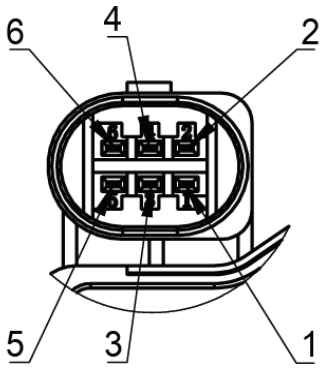

When the sensor malfunctions, in addition to the malfunction indicator light coming on, the following situations may also occur:

1. The idle speed is too high. At this time, check whether the 7 steel pipes a of the throttle valve are loose, whether the rubber tubes that mate with the steel pipes are loose, cracked, etc.; also check whether the 6 idle speed screws b are loose, exposed on the surface, or have fallen off.

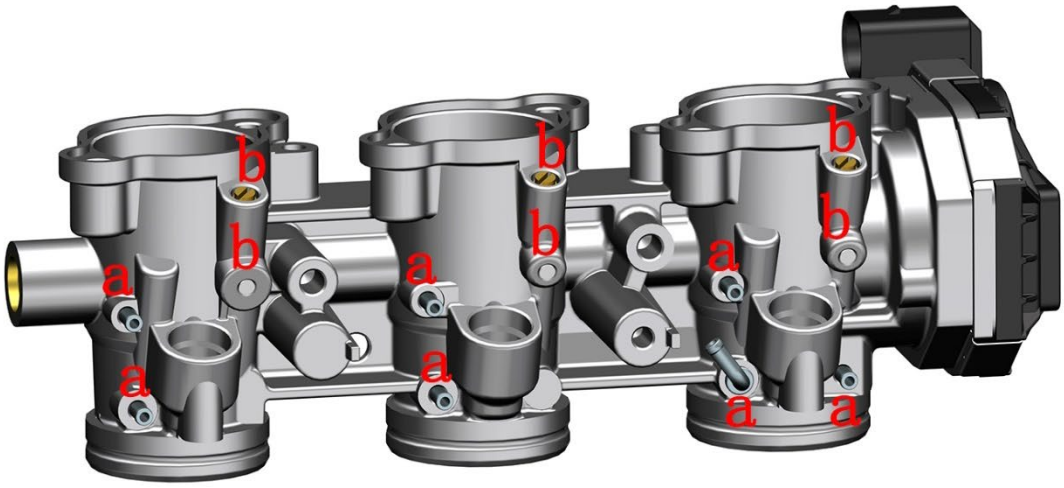

2. Idling is unstable, with the engine speed fluctuating up and down. At this time, connect the diagnostic tool and check that the throttle signal voltage fluctuation must not exceed 0.08V, and the throttle opening fluctuation must not exceed 0.5%. If any of the above is abnormal, the throttle body needs to be replaced.

11.4 Sensor

When instrument shows the fault light is on,If the displayed fault information is a throttle-related sensor fault code such as inlet air temperature, pressure, stepper motor, position, etc., you can read the fault code through the diagnostic instrument to confirm whether it is a current fault or a historical fault.When using the diagnostic instrument, first turn the ignition switch to the ignition state, then find the OBD diagnostic interface from under the cushion, connect the diagnostic instrument, and select the Moshen FE08 EFI system to enter, or select the OBDII general protocol to enter.

11.4.1 Throttle position sensor (2024 model)

If the fault light of the instrument is on, if the fault information is displayed as the fault code of the position sensor such as 0123 or 0122, and the diagnostic instrument shows that the fault exists and cannot be cleared, then the engine data flow is viewed, and the throttle position voltage parameter is found, and the position sensor voltage is 0.45~0.75V when the throttle is not moving; When the throttle is screwed to the end, the voltage is 3.6~4.2V. If the above standards are not met, the voltage display is oversized or too small, you need to disassemble the fuel tank and air filter for the next step of investigation, If you need to remove the throttle, you need to seal the intake manifold with a clean cloth or paper towel after disassembly to avoid getting into foreign objects such as dust.

excessive voltage and 0123 failure, first check whether the cable connector of the throttle position sensor is loose and falling, whether the pins inside the plug are falling off and broken, and whether the cable at one end of the plug is broken or broken; If the voltage is ultra-small and 0122 is faulty, check whether the cable is damaged and the skin causes the copper wire to be connected to the engine frame and other metal parts,If the cable is worn and causes the cable to lap on the metal parts, re-wrap it with electrical tape and take anti-wear measures.

If there is no abnormality in the above-mentioned connector and cable, this part needs to be replaced, and the machine needs to be shut down and then operated when replaced. After reinstalling, use the diagnostic instrument to clear the historical faults to complete the troubleshooting process.

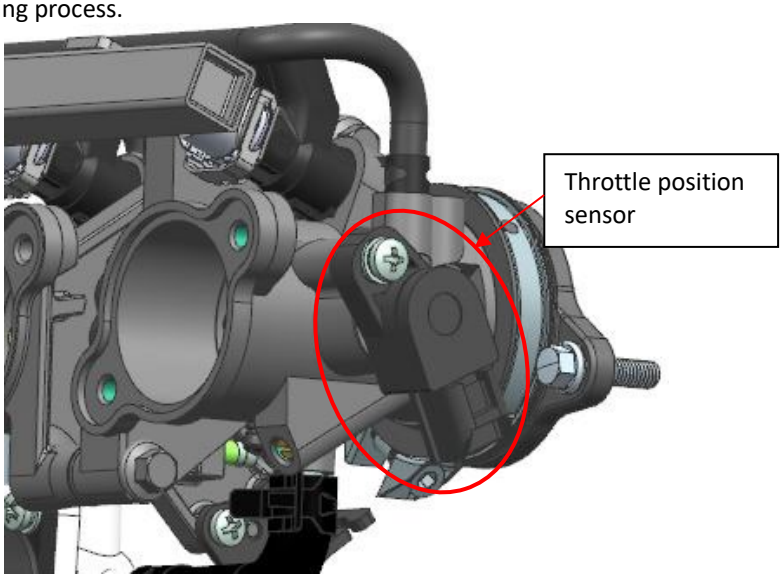

11.4.2 Inlet air pressure sensor (2024 model)

If the instrument shows fault light is on, if the fault information is displayed as 0108, 0107, 0113 fault code, and the diagnostic instrument shows that the fault exists and cannot be cleared, then check the engine data flow, find the intake manifold pressure and intake temperature parameters, in the absence of ignition, the intake manifold pressure is about the local atmospheric pressure, and the intake air temperature is about the surface temperature of the throttle. If the above standards are not met, and the pressure and temperature are too large or too small, the fuel tank and air filter need to be dismantled for further investigation.

If the pressure is too high, it is a 0108 fault, first check whether the cable connector of the inlet temperature and pressure sensor is loose and falling, whether the pins inside the plug are falling off and broken, and whether the cable at one end of the plug is broken or broken; If the pressure is ultra-small, it is a 0107 fault, then check whether the cable is damaged and the skin causes the copper wire to be connected to the engine frame and other metal parts, if there is wear and tear to build the metal parts, then re-wrap the electrical tape and take anti-wear measures.

When there is a 0113 fault, remove the inlet temperature and pressure sensor from the throttle, place it in the ambient temperature for five minutes (20~30 °C), use a multimeter to detect whether the resistance of the two pins is between 2726~1586Ω, if the resistance is normal, check whether the pins inside the plug are broken or broken, and whether the cable at one end of the plug is damaged or broken.

If there is no abnormality in the above-mentioned connector and cable troubleshooting, this part needs to be replaced, When you replace it, you need to shut it down before operating, after reinstalling, use the diagnostic instrument to clear the historical faults to complete the troubleshooting process.

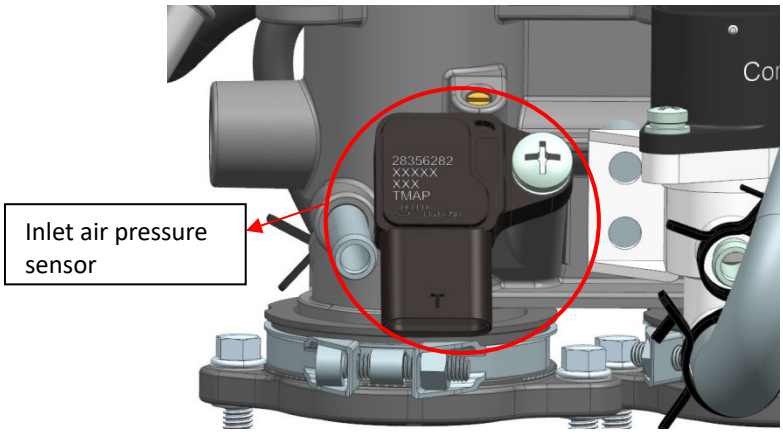

11.4.3 Stepper motors (2024 model)

If the instrument shows fault light is on, if the fault information is displayed as 0505 fault code, and the diagnostic instrument shows that the fault exists and cannot be cleared, then check the engine data flow and find the number of steps of the stepper motor, the standard steps of the stepper motor are about 100 steps When there is no ignition, the standard number of steps of the stepper motor is about 100 steps, and when the ignition is idling, it is 50±20 steps, and it is normal for the number of steps to be different due to the influence of the engine water temperature. If the above criteria are not met, check the stepper motor resistor.

Use a multimeter to detect the resistance between the 1 and 2, 3 and 4 pins of the stepper motor, the normal resistance value is 53±5Ω, there will be a difference out of the range due to the influence of temperature, if the resistance is measured infinite, open circuit, or very small resistance, it needs to be replaced.

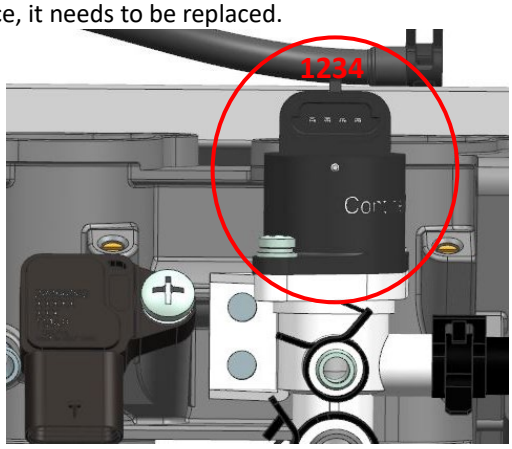

External intake air pressure sensor (2026 model)

When the vehicle's malfunction indicator light comes on, reporting fault codes 0106, 0107, 0108, and the vehicle is difficult to start or fails to start, the following inspection methods should be followed:

1. Check whether the appearance of the pressure sensor has been impacted by external force, cracked, and whether the plug is loose or fallen out. After checking and confirming no issues, unplug the pressure sensor plug with the vehicle turned off, and check whether the pins of the pressure sensor are skewed or missing.

2. Turn off the vehicle, unplug the pressure sensor plug, and measure the resistance between the sensor pins. As shown in the figure, the resistance between pins 1 and 2 of a normal pressure sensor is 210±50Ω, the resistance between pins 1 and 3 is 260±50Ω, and the resistance between pins 2 and 3 is 60±25Ω. Remember to reconnect the plug after the inspection.

3. Turn on the vehicle, turn on the engine stop switch without ignition, use a diagnostic tool to read the engine parameters for judgment, select the EFI system that matches the current vehicle model to enter, and check the current intake manifold pressure parameter. Under normal circumstances, the parameter is approximately equal to the local atmospheric pressure. Then start the engine by ignition. After the water temperature reaches 80°C, the manifold pressure is 38~44kpa. (The idle pressure of a new vehicle will be higher than this value and will decrease after running-in). If the idle intake pressure of the vehicle after running-in is greater than 44kpa, check whether the cylinder head is leaking.

4. If the above inspections do not meet the standards, replace this part; otherwise, check whether the cables connecting the sensor are damaged or broken.

12. Ignition coil

When the vehicle malfunction indicator light comes on and reports fault codes 0351 (ignition coil fault in cylinder 1), 0352 (ignition coil fault in cylinder 2), and 0353 (ignition coil fault in cylinder 3), the following inspection methods should be followed:

1. Check the appearance of the ignition coil for external impact, cracking, and whether the plug is loose or fallen out. After confirming no issues, unplug the ignition coil plug with the vehicle turned off, and check whether the injector pins are skewed or missing.

2. Turn off the vehicle, unplug the ignition coil plug, and measure the resistance between the two pins. As shown in the figure, at 20°C, the normal resistance is 0.7±0.1Ω. If the measured resistance is infinite, it indicates an open circuit in the ignition coil and replacement is required.

3. If the above inspections do not meet the standards, this part needs to be replaced; otherwise, check whether the cables connecting the sensors are damaged or broken.

If you want to replace the ignition coil, you can follow the steps below：

It is necessary to remove the fuel tank, surrounding, air filter housing, etc and then ignition coil. Use a dust gun to blow off foreign objects and dust at the cylinder head. Unplug 3 plugs.

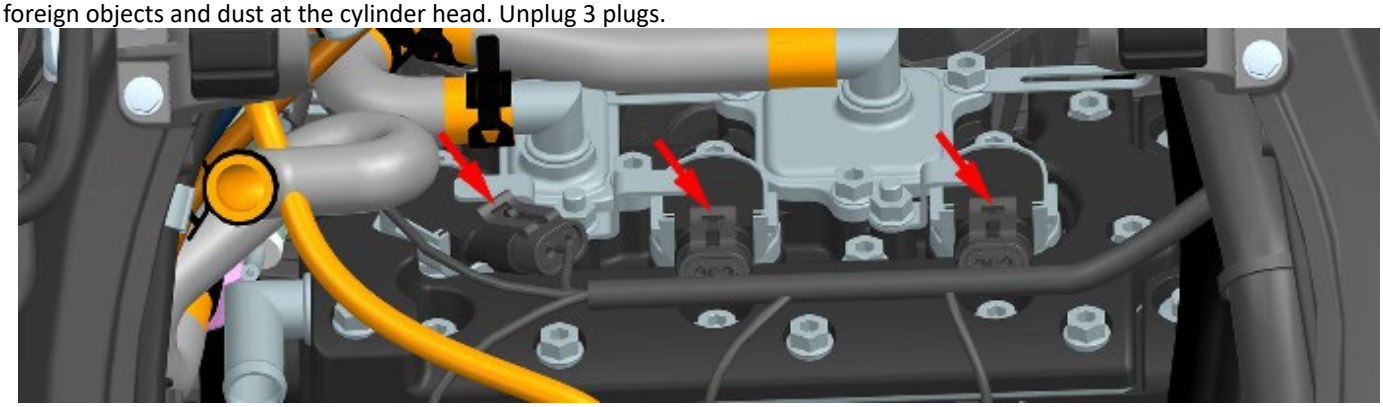

Remove the nut with a 10# sleeve and remove the ignition coil pressing plate. Remove the ignition coil. Use the 14# sleeve to remove the spark plug. If the fit is tight, you can shake it slightly from side to side to take out the ignition coil.

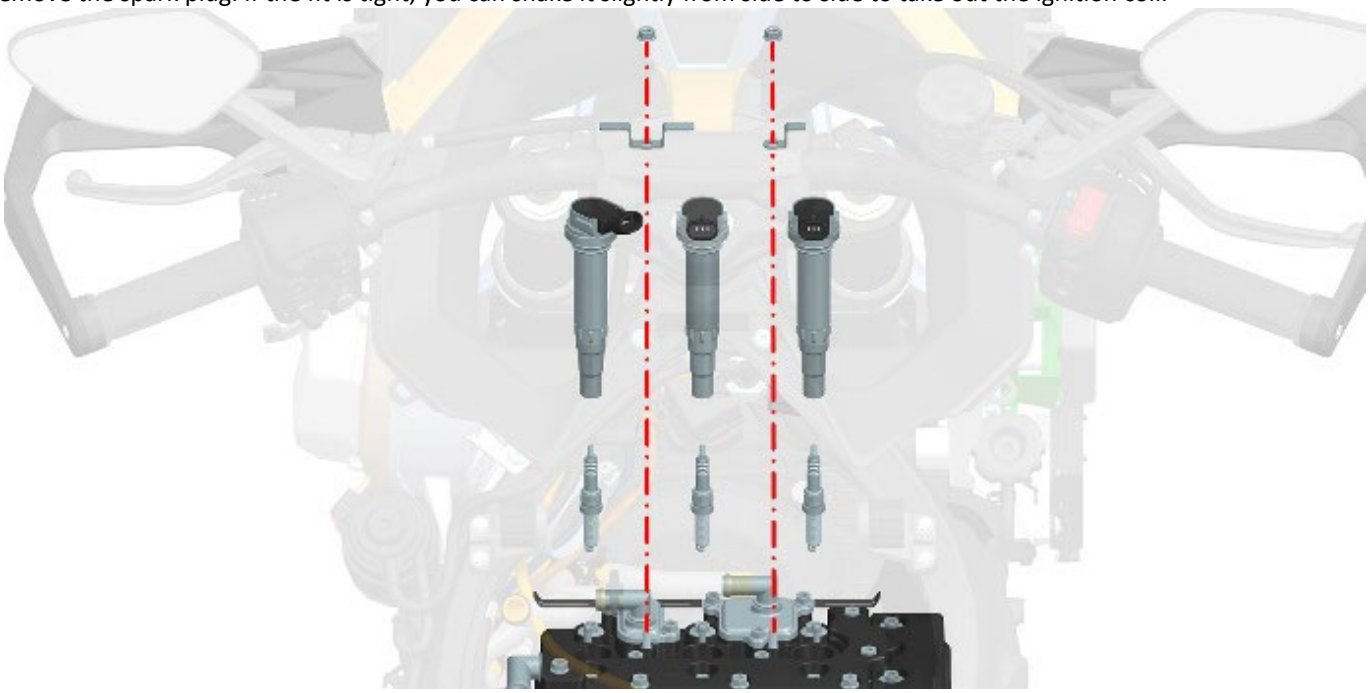

When installing the ignition coil back, first insert the ignition coil back into the bottom, and turn the ignition coil plug towards the position shown in the figure above, then put it back into the pressure plate, and put the nut back tight, and the torque standard is 11.5±1N.m.

failure.

13. Secondary make-up valve

After unplugging, use a multimeter to measure whether the two-pin resistance is 20±2Ω, or blow compressed air in the direction of the arrow for ventilation detection.

14. Crankshaft position sensor

When the engine fails to start and the meter does not display the speed, and the diagnostic instrument reads the crankshaft sensor to be faulty, it is necessary to check whether the crankshaft position sensor is normal.

The crankshaft position sensor is mounted on the left crankcase cover and is integrated with the magneto stator. Find the sensor plug on the left side of the body, press the head anti-release latch, and pull it out. The resistance of the crankshaft position sensor ① measured with a multimeter should be 300±20Ω at 25°C.

In addition, the three-pin plug of the magneto stator (2) should be 0.5±0.3Ω when measuring the phase resistance of any two terminals at 25°C using a multimeter.

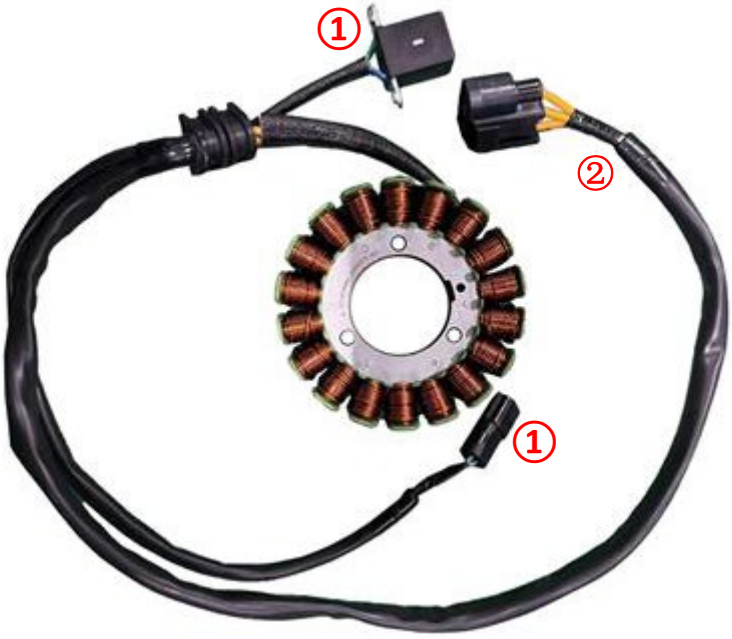

15. Air Filter Intake Air Temperature Sensor

When the vehicle's malfunction indicator lamp lights up and reports fault code 0110, the following inspection methods should be followed:

1. Check whether the appearance of the intake air temperature sensor has been impacted by external force, cracked, and whether the plug is loose or fallen out. After the inspection is correct, unplug the intake air temperature sensor plug with the vehicle turned off, and check whether the sensor pins are skewed or missing.

2. Turn off the vehicle, unplug the intake air temperature sensor plug, and measure the resistance between the sensor pins. As shown in the figure, at 30°C, the resistance between the two pins of a normal temperature sensor is 1.55 - 1.77 KΩ. The table of resistance corresponding to different temperatures is on the right. Generally, the temperature of the sensor is equivalent to the ambient temperature. Remember to reconnect the plug after the inspection.

3. When fault code 0110 is reported, since it is an open-circuit fault, the detected resistance will be infinite. In this case, replacement is required. Another situation is that the cable is damaged. At this time, the resistance is shown to be normal, but the fault code cannot be cleared. The cable needs to be checked for abrasion.

4. If the above troubleshooting does not meet the standards, this part needs to be replaced; otherwise, check whether the cable connecting the sensor is damaged or broken.

5. Generally, false fault reports may occur due to the disassembly and assembly of the plug during customer maintenance, which can be manually cleared or cleared using a diagnostic tool.

Temperature °C	Resistance kΩ			B Constant
	MIN.	NOM.	MAX.	K
−30	29.7300	33.2500	37.1400	3561.2
−25	22.2200	24.7200	27.4900	3585.5
−20	16.7600	18.5700	20.5500	3610.2
−15	12.7600	14.0700	15.5100	3635.3
−10	9.7960	10.7600	11.8100	3655.2
−5	7.5850	8.2980	9.0700	3677.4
0	5.9200	6.4510	7.0240	3696.8
5	4.6560	5.0550	5.4830	3715.9
10	3.6890	3.9900	4.3120	3735.1
15	2.9430	3.1720	3.4170	3748.8
20	2.3640	2.5400	2.7260	3767.0
25	1.9110	2.0460	2.1890	3780.0
30	1.5550	1.6600	1.7700	3792.8
35	1.2730	1.3540	1.4400	3812.0
40	1.0480	1.1110	1.1780	3817.4
45	0.8671	0.9173	0.9696	3825.0
50	0.7216	0.7613	0.8024	3838.3
55	0.6036	0.6351	0.6677	3848.2
60	0.5075	0.5325	0.5584	3855.2
65	0.4287	0.4487	0.4693	3860.3
70	0.3638	0.3799	0.3963	3866.1
75	0.3101	0.3231	0.3362	3871.9
80	0.2655	0.2760	0.2866	3880.0
85	0.2283	0.2367	0.2453	3882.9
90	0.1971	0.2039	0.2108	3877.0
95	0.1708	0.1764	0.1819	3882.9
100	0.1486	0.1531	0.1576	3889.7
105	0.1292	0.1334	0.1376	3881.5
110	0.1128	0.1167	0.1206	3881.8
115	0.0988	0.1024	0.1060	3880.0
120	0.0868	0.0902	0.0935	3873.1
125	0.0766	0.0797	0.0828	3883.2
130	0.0677	0.0706	0.0735	3872.7
135	0.0601	0.0628	0.0655	3858.9
140	0.0535	0.0560	0.0585	3856.0
145	0.0478	0.0501	0.0524	3862.1
150	0.0428	0.0449	0.0471	3852.6

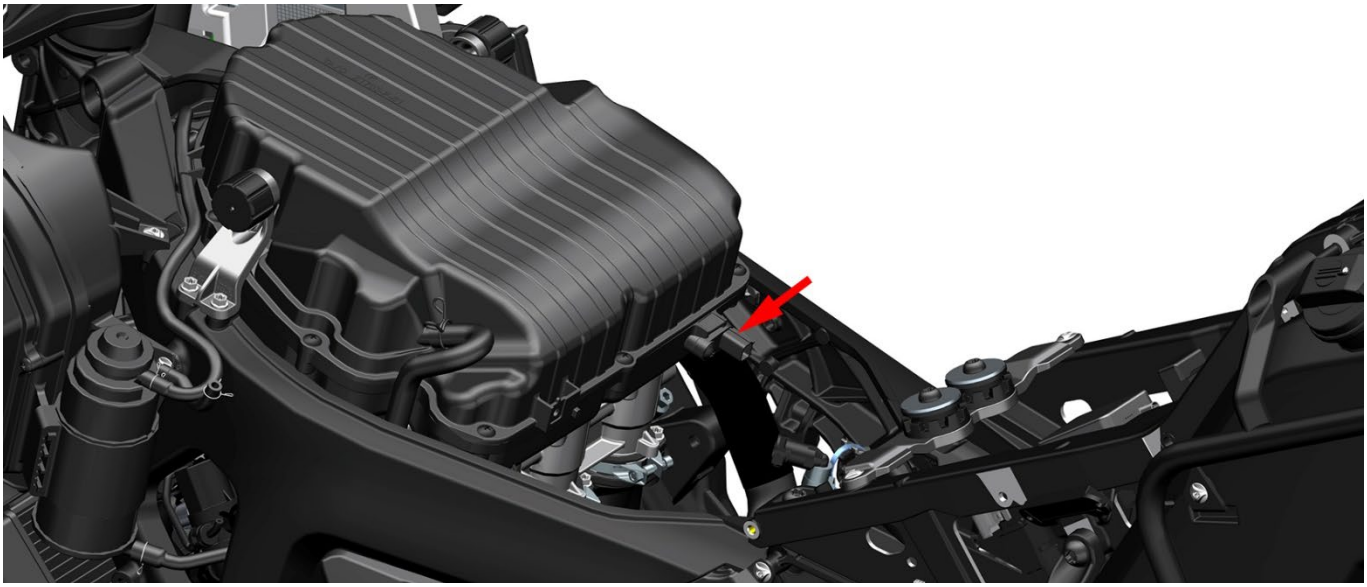

Troubleshooting process when the engine does not start and there are no signs of landing

When the start button is pressed, the starter motor can drive the engine to run normally, but the engine cannot work normally, and there are no signs of landing, you can refer to the following diagnostic process to investigate the cause of the fault.

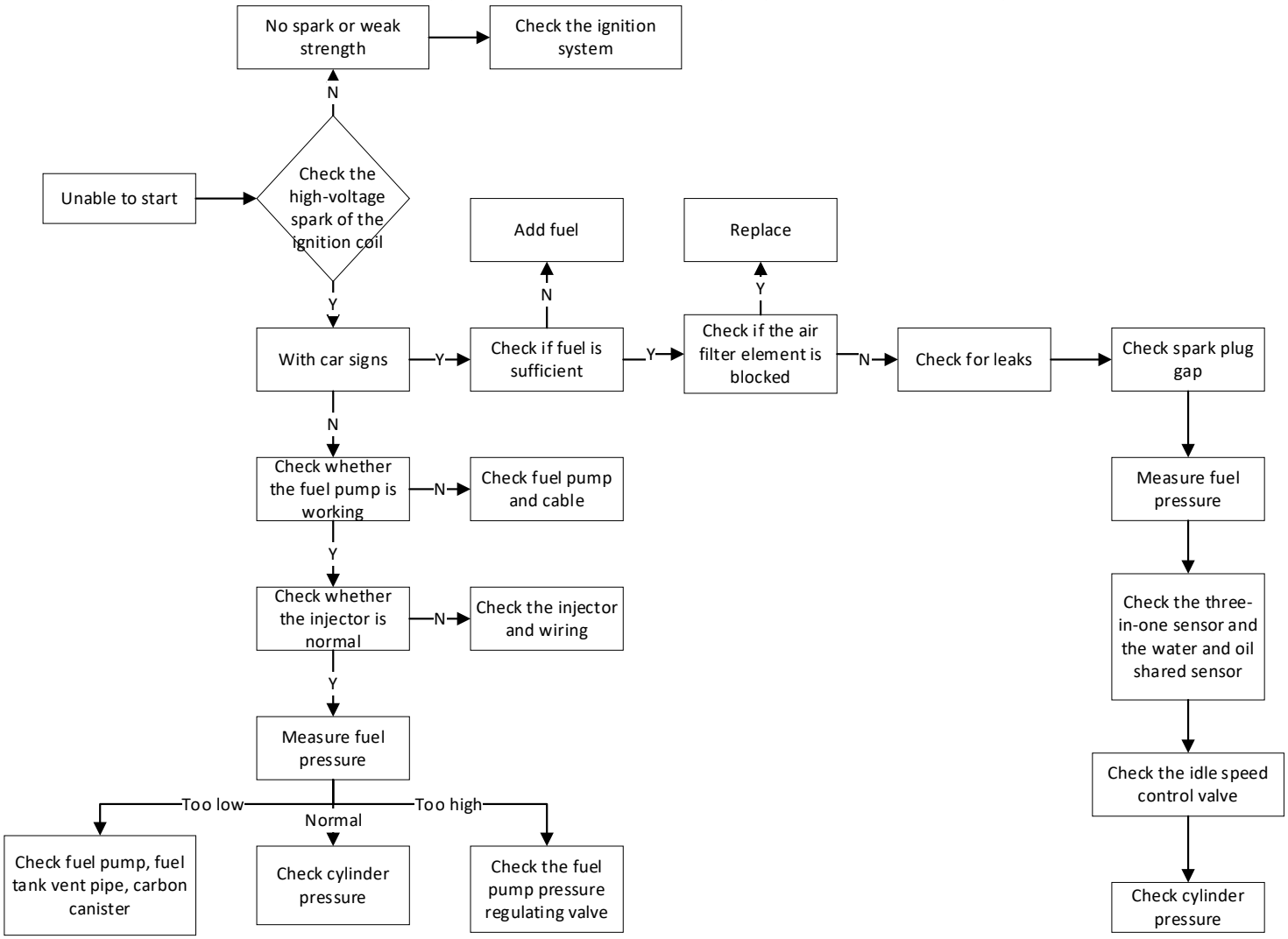

Troubleshooting process when the engine does not start and there are signs of landing

When the start button is pressed, the starter motor can drive the engine to run normally, and when there are signs of the motocycle but cannot start, you can refer to the following diagnostic process to investigate the cause of the failure.

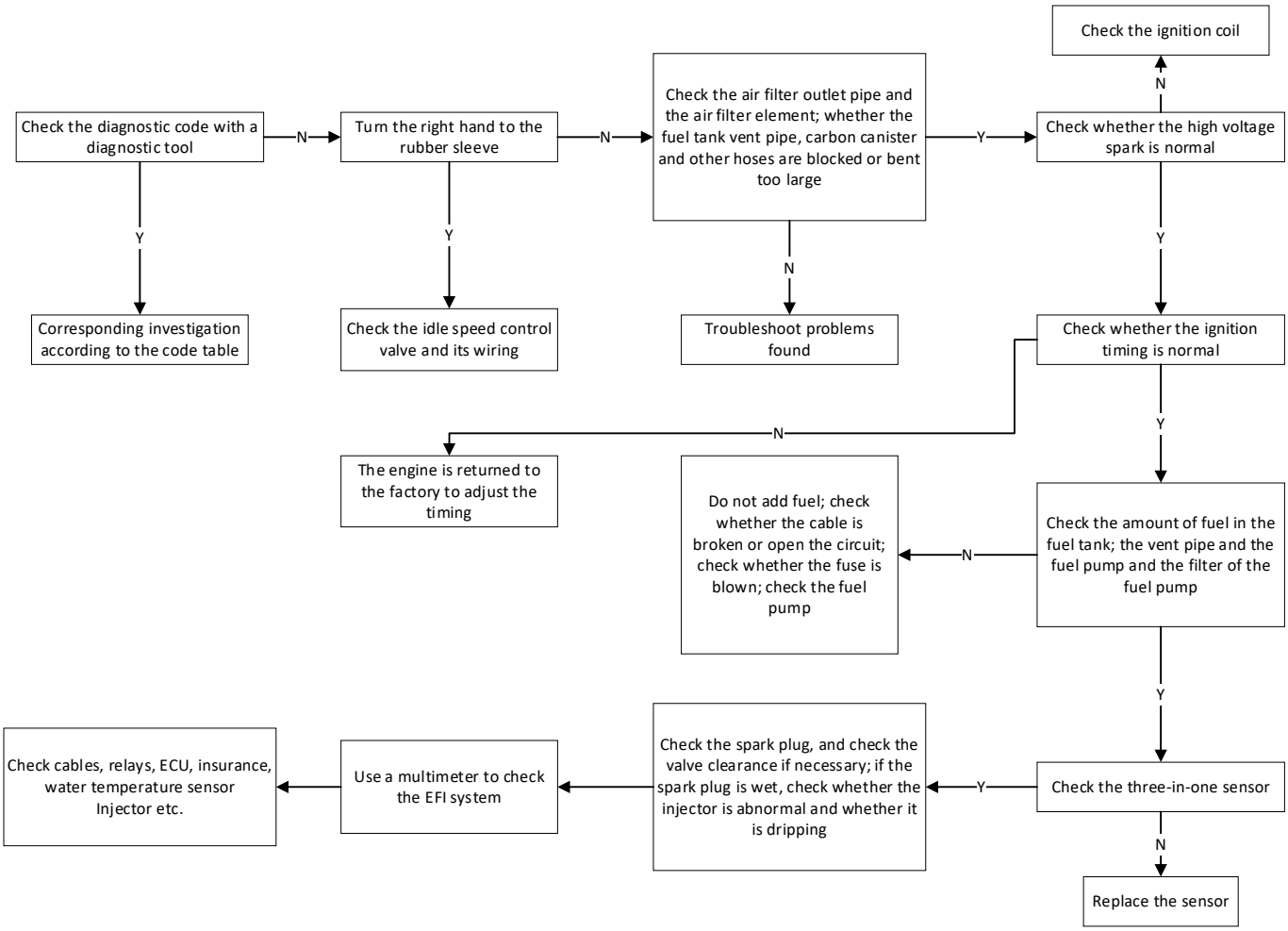

Poor acceleration

Rotate the right hand handle rubber sleeve, the engine speed can not be increased immediately, there is a lag phenomenon, and the acceleration is slow; You can refer to the following diagnostic process to troubleshoot the cause of the fault.

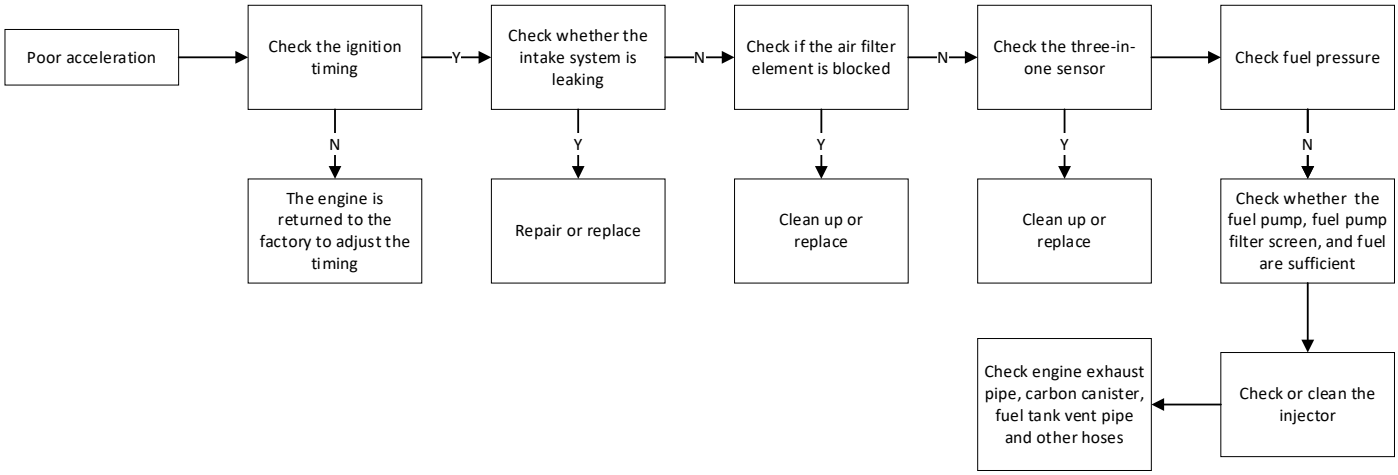

The idle speed of the hot motocycle is high

When there is a cold motocycle, it can run normally and quickly, and the idle speed does not fall back to 1500±100 rpm after the hot motocycle, you can refer to the following diagnostic process to troubleshoot the cause of the failure.

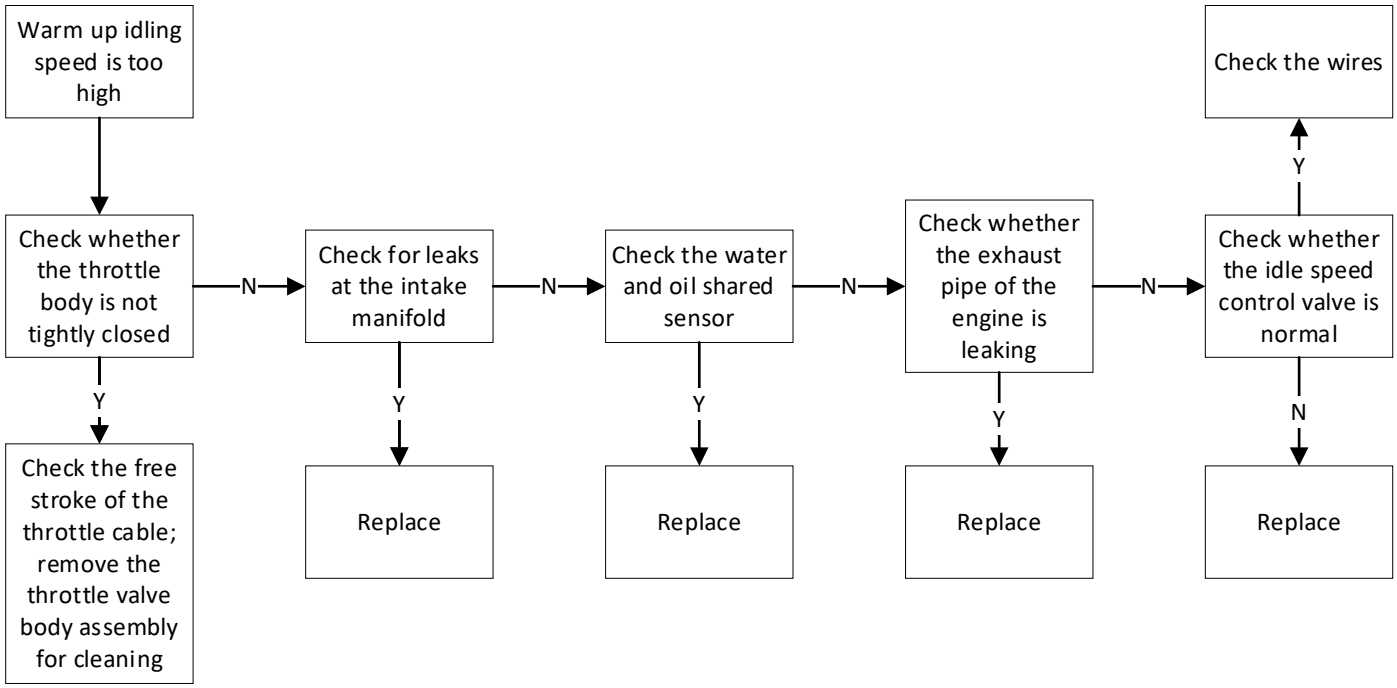

The cooling motocycle is unstable at idle

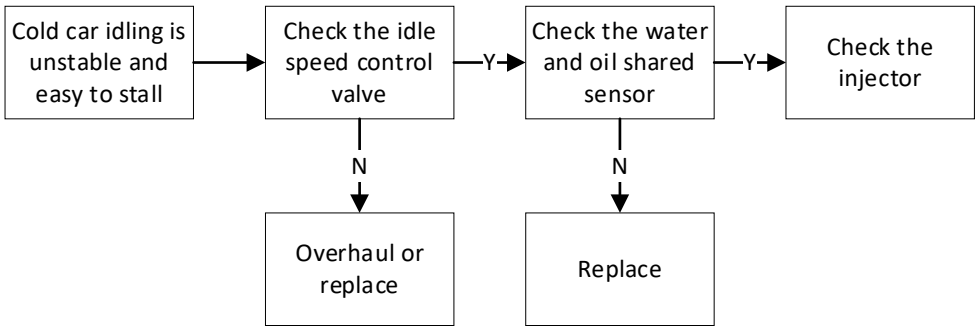

The idle speed is unstable and easy to stall

The engine is unstable in idling and easy to stall, and it can return to normal after hot it up. You can refer to the following diagnostic process to troubleshoot the cause of the fault.

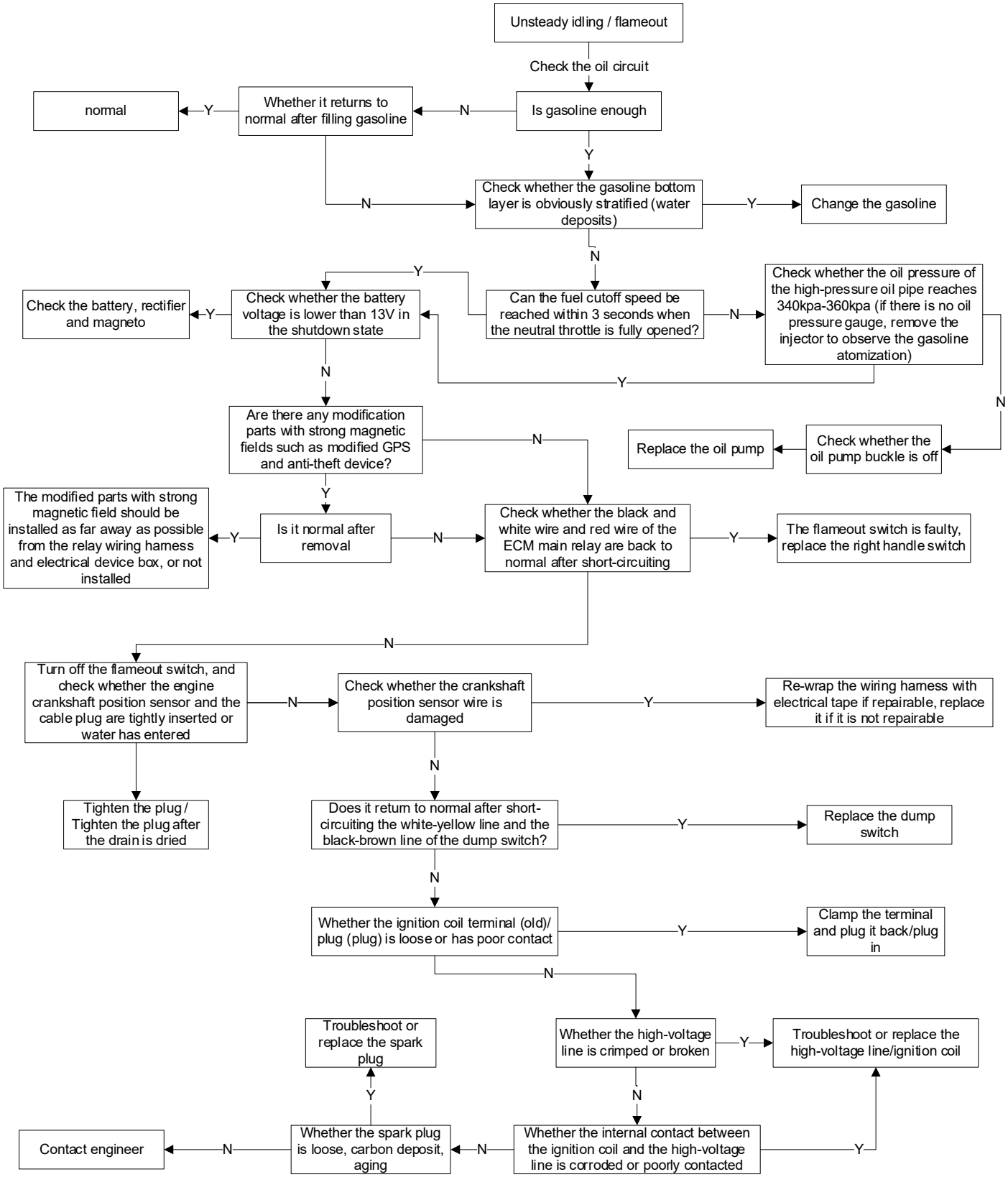

EFI fault indicator is always on analysis flow chart

If the EFI fault“” indicator is always on, you should first check whether the wire plug of each EFI sensor is loose.

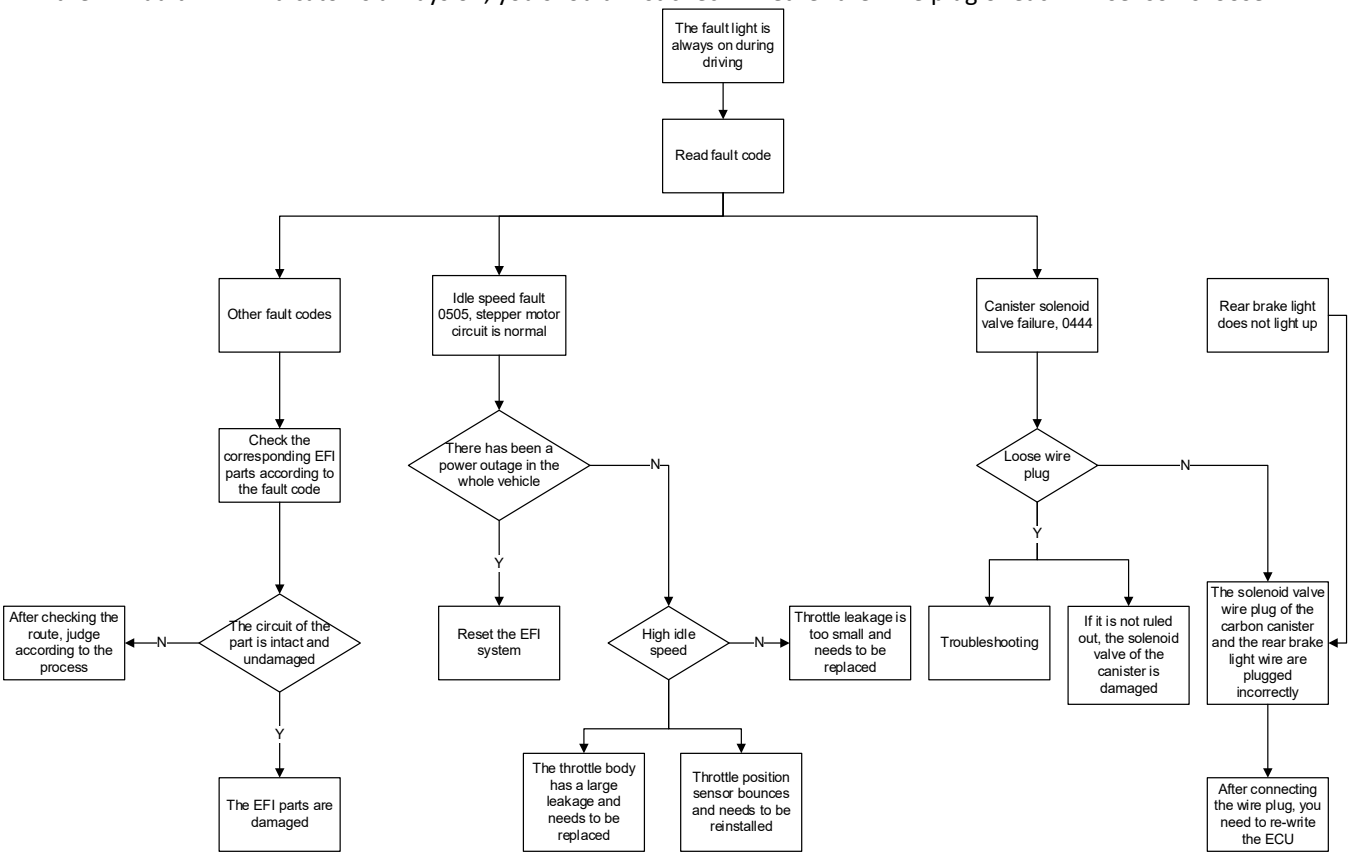

4. Ignition system

Pre-Service Notice

1.The content of this chapter requires certain maintenance experience, and it is recommended to go to a maintenance unit with maintenance qualifications for inspection or maintenance.

2.After powering on, the parts connected to the 12V power supply should not be removed at will, so as to avoid the coil in the appliance from self-induction and instantaneous voltage damage to the ECU or sensor.

3.Use a spark plug with the correct calorific value, a spark plug with an inappropriate calorific value may damage the engine.

4.Ignition system failures are common in the form of poor plug connections and corrosion of terminal blocks, both of which should be checked as a priority.

5.Since the ECU is factory preset, the ignition timing cannot be adjusted. If you need to adjust the ignition timing, you can only return to the factory for maintenance.

6.Make sure the battery is fully charged, if it is not charged, it may result in a slower start or weak or no spark from the spark plug.

Tools：

multimeter

7.Each vehicle has different driving conditions and maintenance conditions, so it is impossible to list all the fault phenomena and troubleshooting procedures. Only some of the more common faults can be listed. Maintenance personnel themselves also need to have a certain amount of professional knowledge and experience accumulation process.

8.Spark plug disassembly and inspection are detailed in the "Spark Plugs" section of the "Maintenance" chapter of this manual. Before removing the spark plug, you need to use a dust blow gun to clean up the surrounding debris and dust, and after removing it, you need to block the spark plug mouth to prevent foreign objects from falling into the engine.

9.If there is a “ " symbol on the right side of the step, you can click to quickly jump to the corresponding step.

WARNING

●Do not plug and unplug the plugs of each part at will, and do not directly clean the plug with water. Always check that it is properly plugged back in after plugging and unplugging.

Troubleshooting

Check the following items before diagnosing the ignition system

a. Check whether the spark plug is abnormal;

b. Check whether the ignition coil high voltage cap or plug is loose;

c. Check whether the high-pressure cap is flooded;

d. If there is no spark, first find the ignition coil of the same model to confirm that there is no fault and install it on the faulty motocycle to test whether there is a spark;

e. Check to unlock the vehicle and hit the ignition switch to "", When the engine is not started, measure whether the "initial voltage" of the ignition primary coil is consistent with the battery voltage.

There are no sparks from the spark plugs

1. Improper spark plug clearance

If the gap is too small, it has a "flame suppression" effect on the electrode, inhibiting the generation of flames, and the spark strength is weak; If it is too large, the ignition voltage will cause no sparks. Adjust to the standard 0.7-0.9mm.

2. A film of oil is attached to the surface of the spark plug electrode

Oil or gasoline enters the combustion chamber and adheres to the electrode surface, causing the electrode to be short-circuited and resulting in no sparks.The oil is generally channeled from the gap between the piston and the cylinder wall and valve guide, check whether the gap is normal, and replace the corresponding parts if it is abnormal.The accumulated gasoline may be caused by the mixture being too thick when the cold engine is started, so you can clean it up before trying to ignite it.

3. The skirt of the spark plug is broken

The high-voltage current breaks down and leaks from the broken part of the skirt, and the spark plug needs to be replaced.

4. The electrode has carbon deposits, and the central electrode leaks electricity to the periphery without discharging to the electrode

Excessive carbon accumulation or oil accumulation on the electrode causes short circuit; and may cause the insulator to burn out. Clean up carbon deposits or replace spark plugs.

5. Damaged electrodes

The central electrode is chemically corroded by electric sparks or combustion gases for a long time, resulting in electrode damage; It needs to be replaced.

6. The spark plug insulation is reduced

Reduced insulation weakens the ignition voltage, resulting in weaker spark strength or no spark; It needs to be replaced.

7. Ignition coil high-voltage wire short circuit

The ignition coil needs to be replaced.

8. The battery is insufficient

If the spark strength is weak or no spark due to insufficient power, charge it with the charger provided with the motocycle. Or ride long distances to recharge.

9. ECU failure

After eliminating the above reasons, it can be judged from the removal of the good ECU from the same model of vehicle and replacing it with the faulty motocycle.

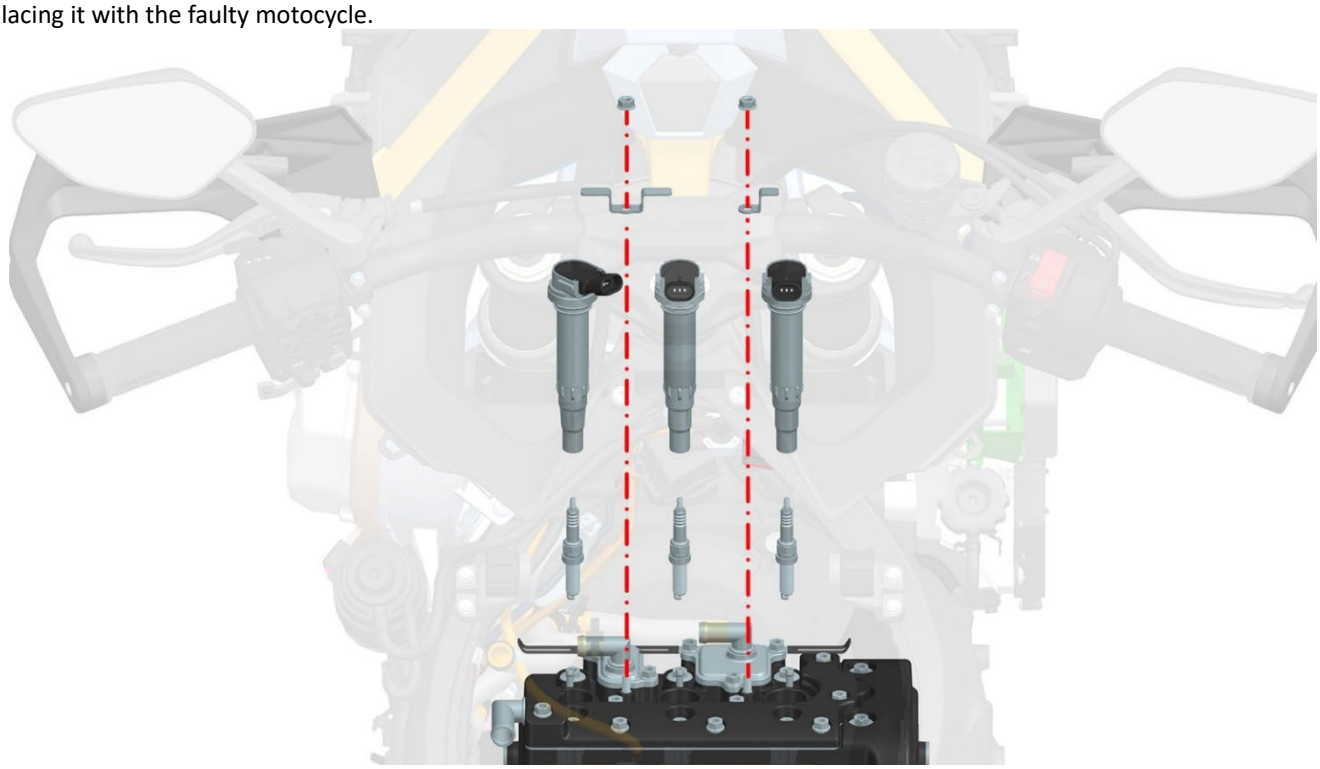

Ignition system layout

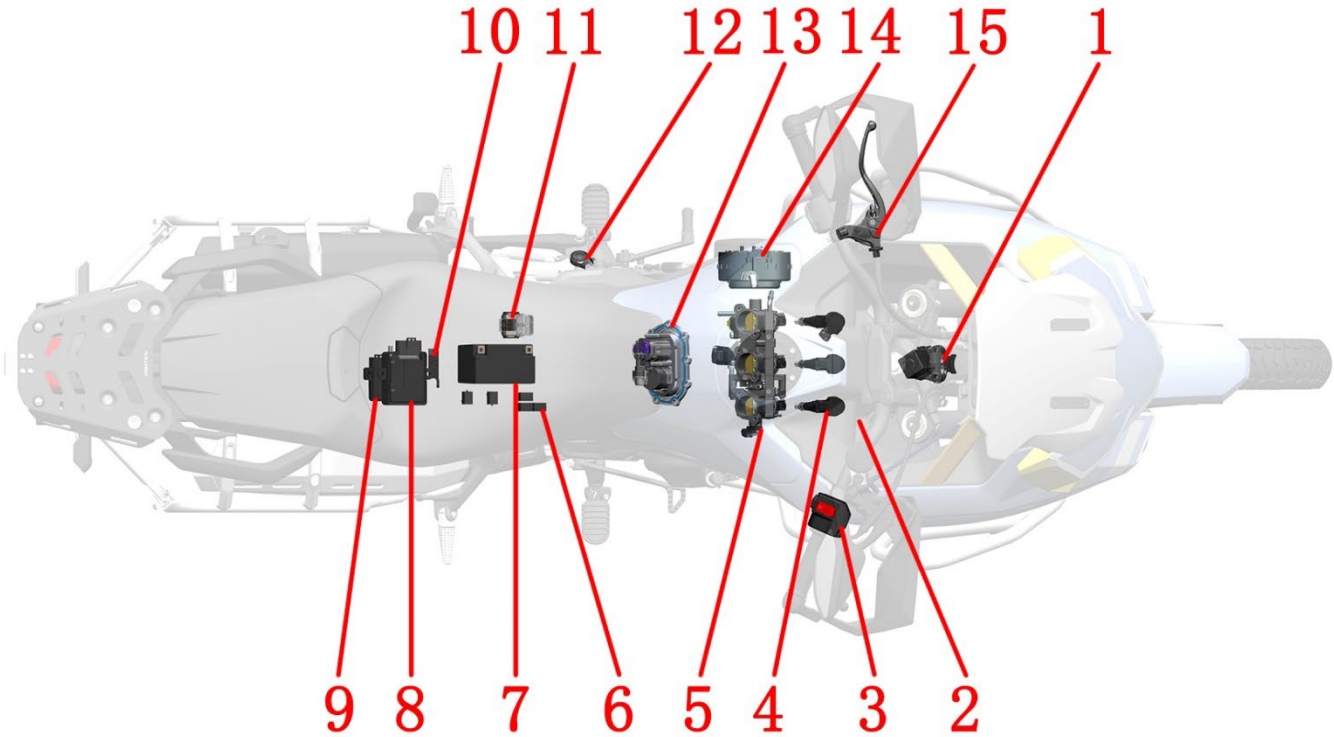

1-Faucet locks 2-Oxygen sensor 3-Right-hand handle switch 4-Ignition coil 5-Throttle assembly 6-Relays（There are 3 pieces inside the main harness fuse box and 2 pieces on the outside of the fuse） 7-accumulator 8-PKE host 9-ECU 10-Tilt switch 11-Start the relay 12-Side bracket flameout switch 13-oil pump 14-Magneto 15-Clutch rocker

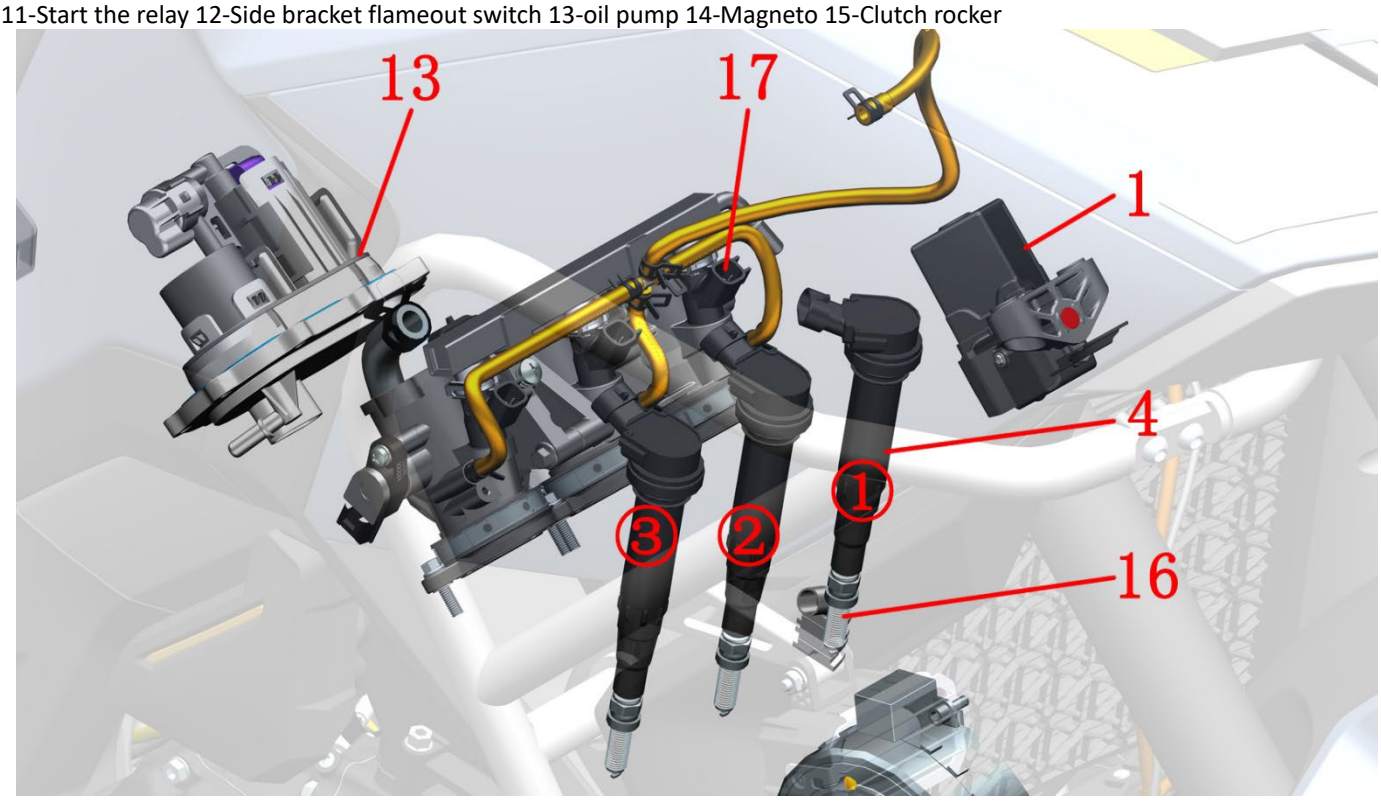

16-spark plug 17-Fuel injectors

Remarks：

●The fuse box comes with the main harness, and the detailed diagram can be found in the EFI relay section of "EFI Parts Fault Diagnosis and Troubleshooting" in the chapter "EFI System" of this manual.

●The magneto stator and crankshaft position sensor are integrated into one part and cannot be replaced individually. For details about the troubleshooting of the crankshaft position sensor, please refer to the section of the crankshaft position sensor in the "EFI Parts" section of the "EFI Systems" chapter of this manual.

Ignition system check

Attention：

●If there is no spark in the spark plug, check all cable joints for loose or poor contact before checking the ignition system.

●Use a high-precision digital multimeter.

For details of the ignition coil test method, please refer to the ignition coil section in the "EFI Parts Fault Diagnosis and Troubleshooting" chapter of this manual.

Pull out the high-pressure cap, find a spark plug of the same model to confirm that there is no abnormality and install it on the high-pressure cap, close to the cylinder head cover for ignition test, and confirm whether the ignition coil is faulty.

Refer to the crankshaft position sensor section in the "EFI Systems" chapter of this manual "EFI Systems" to check whether there is any abnormality.

Ignition coil

For details of the ignition coil disassembly and test method, please refer to the ignition coil section in the "EFI Parts Fault Diagnosis and Troubleshooting" chapter of this manual.

Crankshaft position sensor

Disassembly

Remove the right crankcase cover.

Remove the two bolts that hold the sensor in place, and then remove the black rubber sleeve again.

Installation

Contrary to the order of disassembly.

●A ring of flat sealant needs to be applied to the joint surface of the black rubber sleeve and the left engine cover.

Detect

For details of the detection method, please refer to the section on fault diagnosis and troubleshooting of EFI parts in "EFI System".

5. Starting system

Pre-Service Notice

1. If there is a current flowing through the starter motor when the engine is not started, it can be judged that the starter motor is damaged and needs to be replaced.

2. Before repairing the starter motor, the engine shutdown switch must be turned to " " to prevent personal injury caused by the sudden start of the starter motor caused by misoperation.

3. When the power is insufficient, the engine may not be able to start quickly, or the ignition current may not be provided.

4. You can refer to the steps in the troubleshooting process to check or repair the start-up system.

5. If there is a " " symbol on the right side of the step, you can click to quickly jump to the corresponding step.

WARNING

● When the engine cannot be started, please do not press the electric start button frequently. Frequent operation can lead to overheating or damage to the starter motor, flooding of the cylinder, battery feeding, etc.

Troubleshooting

Note:

● Make sure the battery is fully charged and in good condition.

●Check whether the main fuse (25A) and ECM fuse (15A) are fused. If the fuse is replaced and burned again, the circuit fault needs to be checked first.

● The starter motor should work under the following conditions:

a. unlock the vehicle;

b. retract the side support;

c. The engine stop switch hits " ";

d. Press the start button.

Troubleshooting process when the starter motor is not running:

1. Starter relay

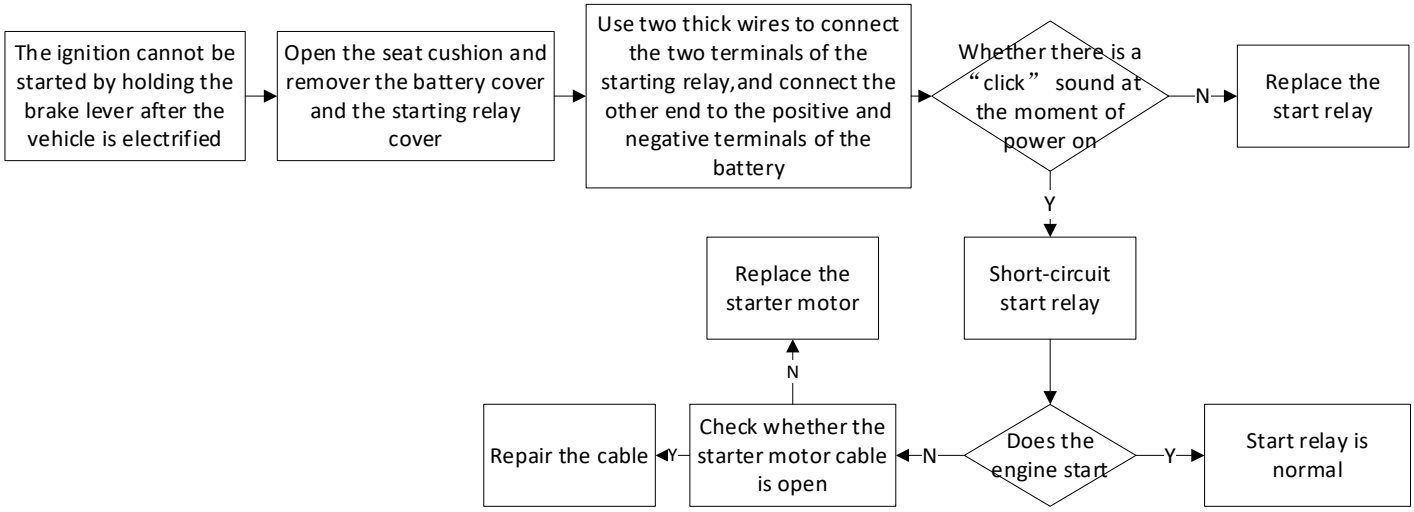

2. Starter motor

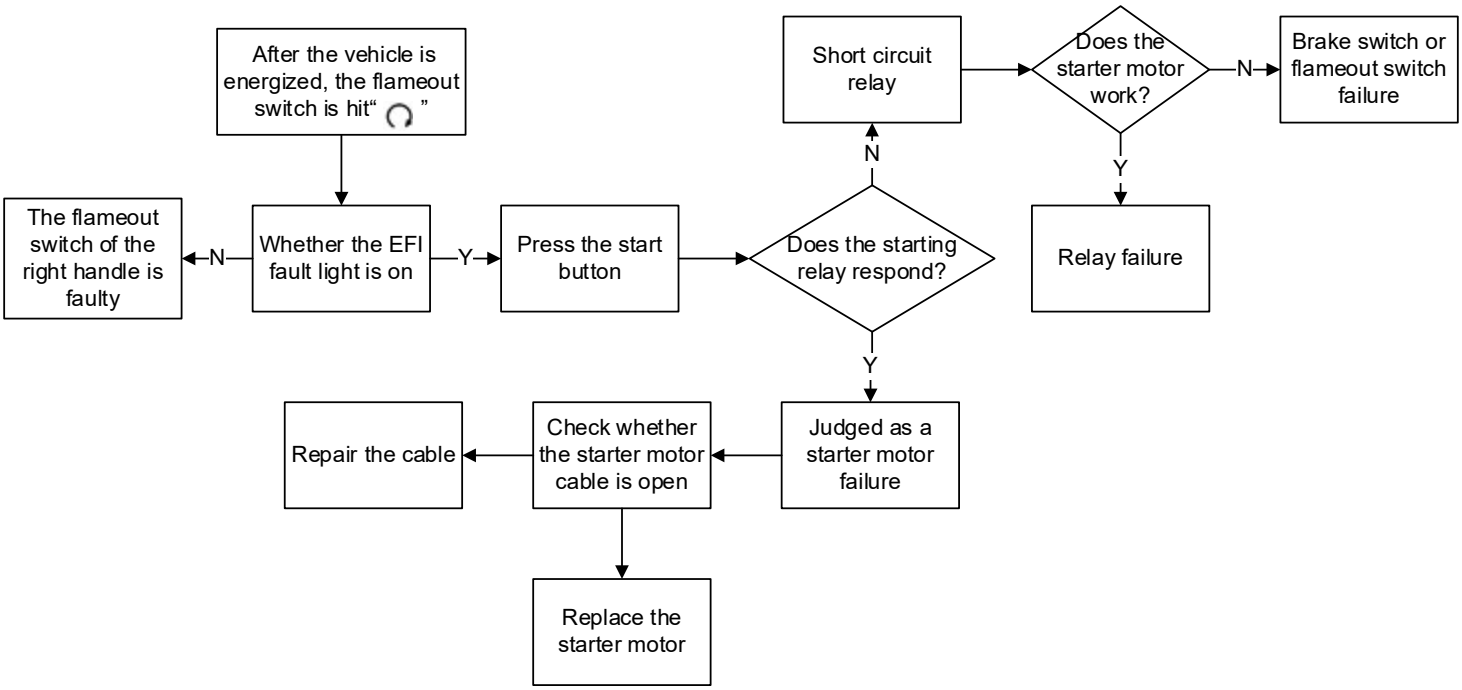

3. The starter motor runs slowly

Check whether the battery is insufficient;
Check whether the battery cable connector is in poor contact;
Check whether the starter motor cable is in poor contact;
Check whether the starter motor is abnormal.

4. The starter motor is working normally, but the engine cannot start.

Check whether the starter gear train is faulty;
Check for ignition system failures.

Starting system layout

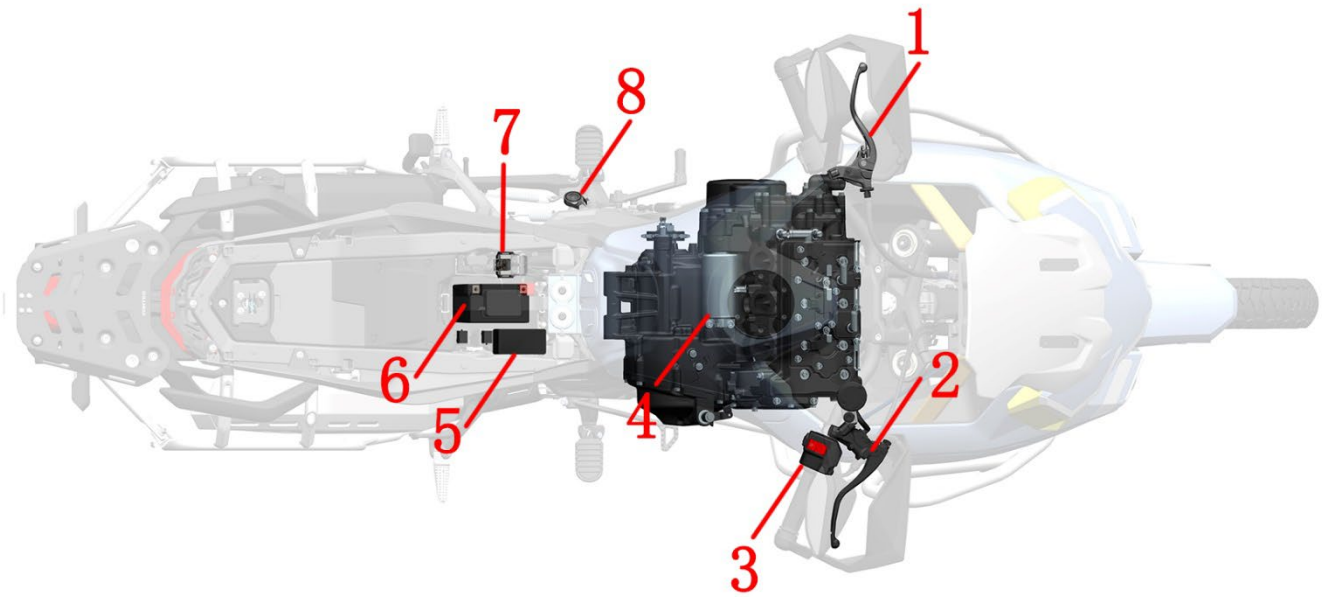

1-Clutch rocker arm (clutch switch) 2-Front disc brake main cylinder (front brake switch) 3-Right handle switch 4-Starter motor 5-Fuse box 6-Battery 7-Starter relay 8-Side bracket power out switch

Electrical schematic diagram of the starting system

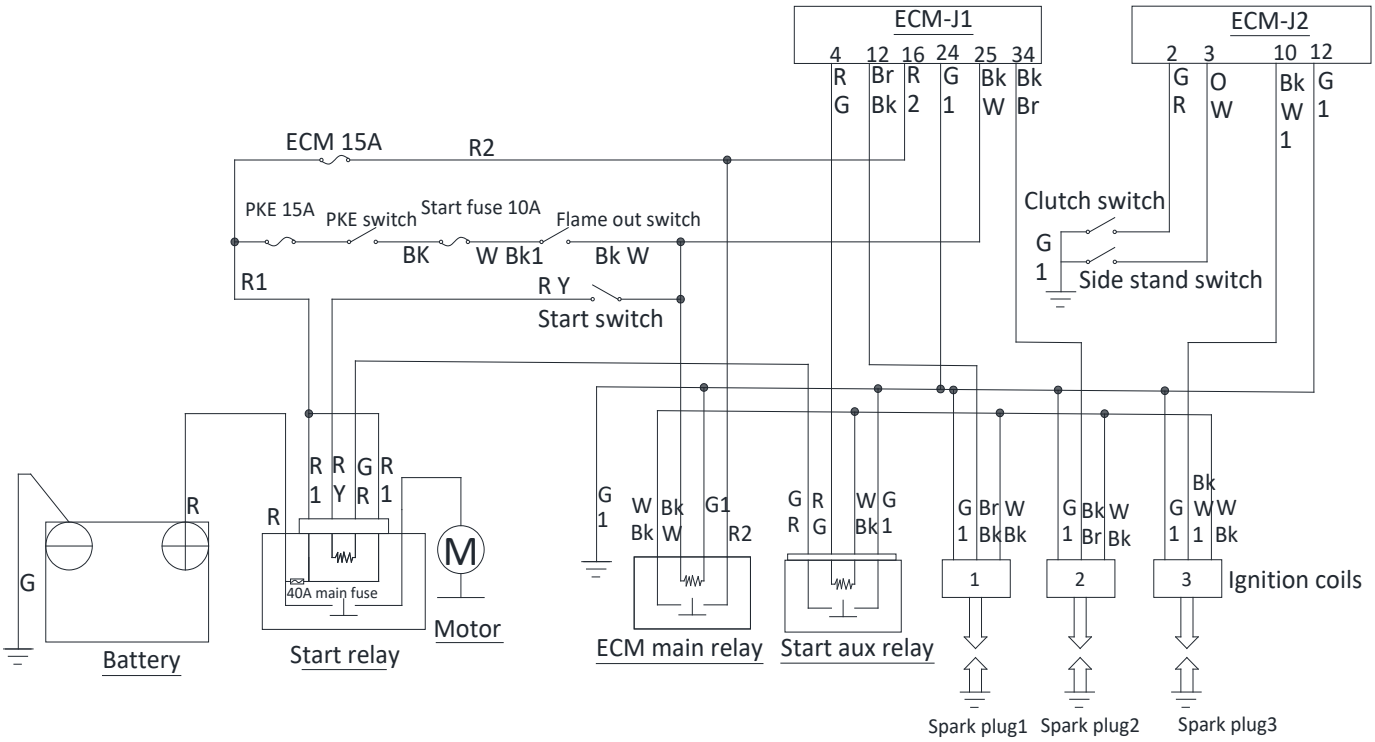

Starter motor

Note:

●If the starter motor is removed for maintenance, replace it with a new O-ring and apply an appropriate amount of oil.

●Our company only sells starter motor assemblies, and does not sell O-rings and motor parts separately. The O-ring has an inner diameter of ϕ25mm (0.98in) and a wire diameter of 3mm (0.12in).

1. Remove the starter motor

a. Disconnect the negative electrode of the battery first. Disconnect the magneton cable, remove the two bolts that hold the motor with a 10# sleeve or 5# hexagon socket to remove the motor from the engine. Remove the O-ring.

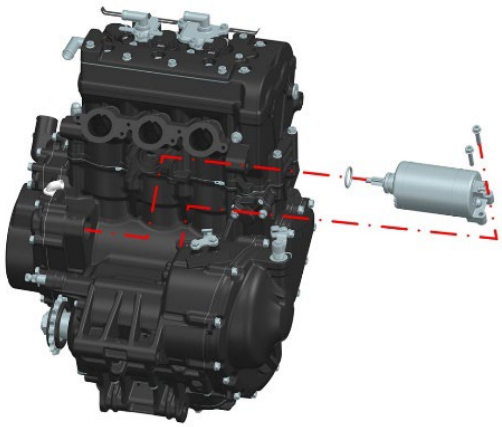

b.When re-installing, pay attention not to omit the O ring of the starter motor, and align the teeth of the electric starting reduction gear. Note that the O-ring should be properly fitted into the box and properly lubricated, as cutting edges may cause leakage. Torque of the two bolts that fix the starter motor: 12±1.5 N.m. and mark with a marker.

2. Disassemble the starter motor

Note:

● If the magnetic tile pulls the electric stick towards the motor housing, the coil may be damaged.

●When installing the electric stick from the slot of the starter motor housing to the housing, make the commutator strip face the rear side;

● When installing the back cover of the starter motor, please align the marking line with the index line;

●When installing the front cover of the starter motor, pay attention to prevent damage to the oil seal lip of the electric shaft, and align the marking line of the front cover with the index line on the motor housing.

Disassemble and assemble the starter motor as shown below.

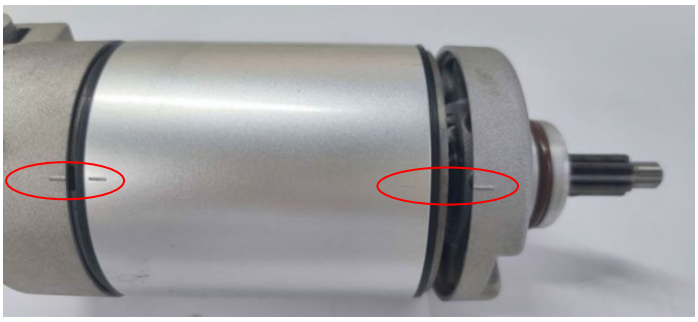

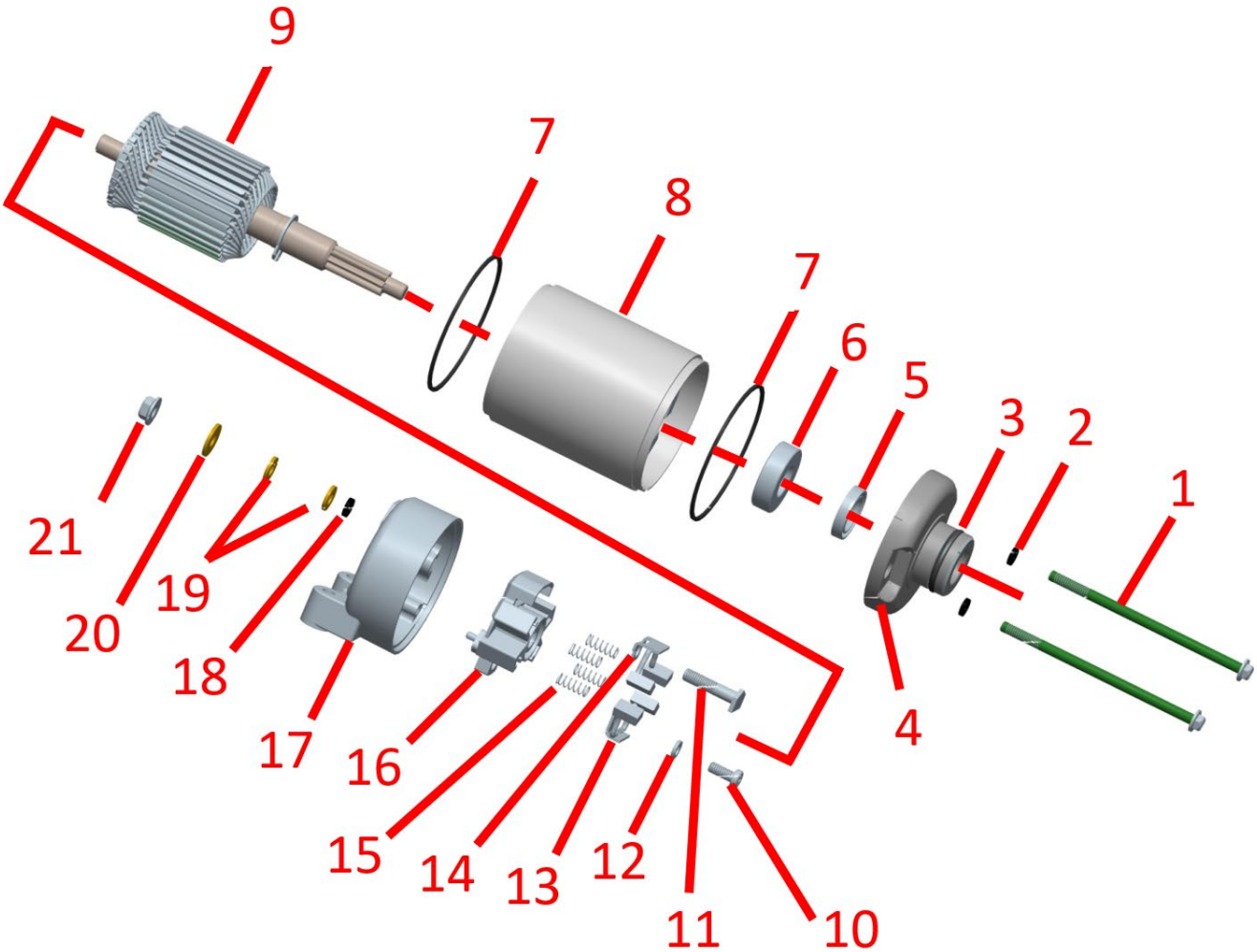

1-M5×98 bolt× 2 2-O ring×2 3-O ring 4-starter motor front cover 5-oil seal 6-bearing 7-rectangular sealing ring 8-starter motor outer shell 7-rectangular sealing ring 9-electric pestle 10-screw ×2 11-head screw with limit 12-washer 13-negative brush×2 14-positive brush×2 15-worm spring ×4 16-insulating brush frame 17-starter motor back cover 18-sealing rubber ring 19-insulating gasket 20 anti-loosening gasket 21 nut

Examination

Starter motor front cover:

Check whether the oil seal of the front cover is worn and damaged;

Also check that the bearing fits snugly with the front cover.

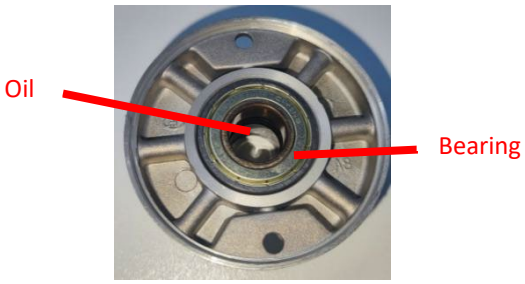

Starter motor back cover:

Check whether the bushing of the back cover is worn or damaged;

Check the brushes for damage, measure the length of the brushes, and the use limit is 11.5mm (0.45in).
The connectivity check of the back cover is as follows:
The positive brush is connected to the end of the cable; There is no connection between the end of the cable and the back cover;
The negative brush is connected to the back cover.

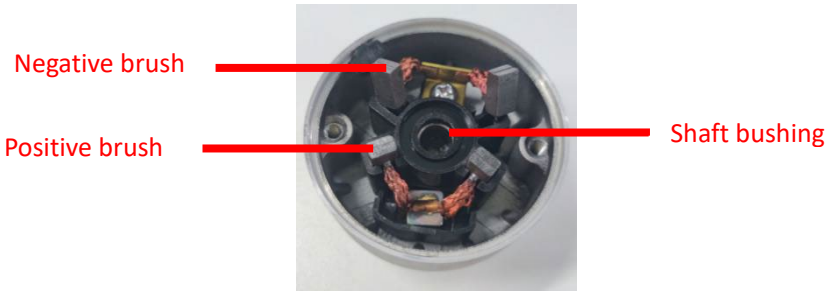

Electric pestle:
Clean the metal debris on the electric pestle and check whether the commutator strip has discoloration;
Check that there should be a gap between the commutator and the machine shaft.

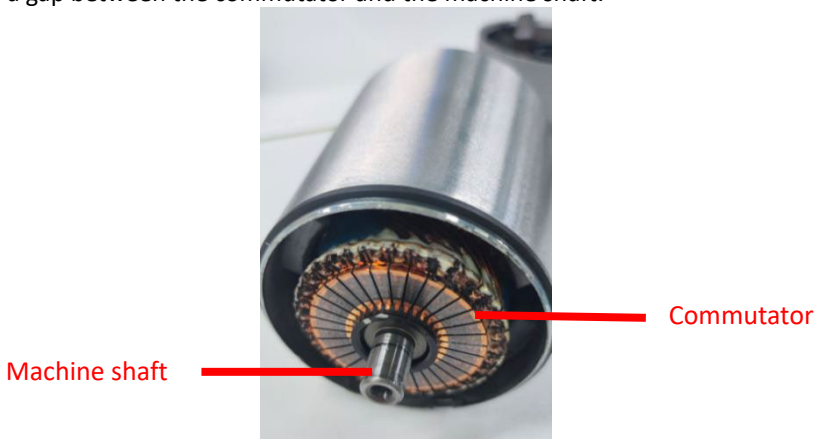

Check the starter relay

1. Operation inspection

a. Remove the cushion.

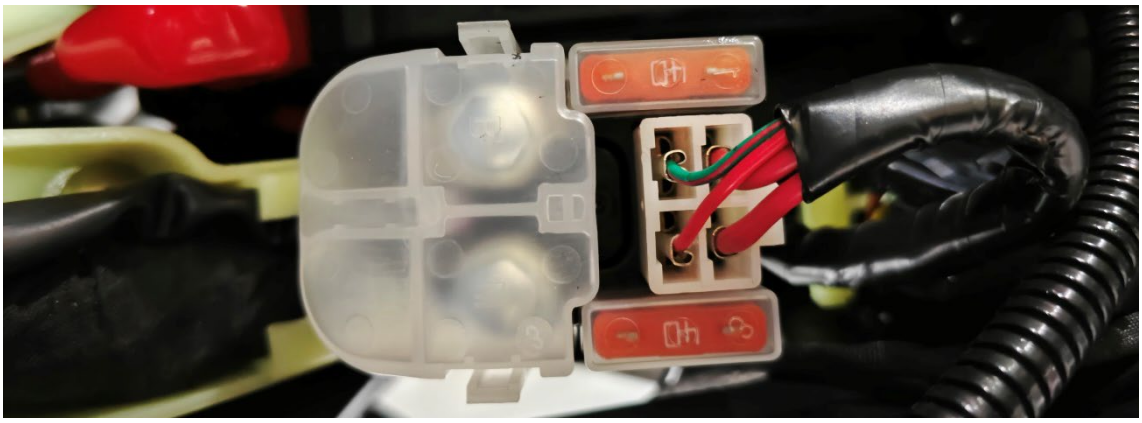

b. Unlock the vehicle, hit the engine shutdown switch to " ", put away the side bracket, pinch the brake handle and press the start button, then you should be able to hear the sound of the starter relay sucking, otherwise the starting line should be checked.

2. Check the relay coil

2.1 Input line

Adjust the multimeter to DC voltage 20V (or DC voltage if it is an auto-ranging multimeter). Insert a red watch pen into the yellow/red wire rubber sleeve and fit snugly with the terminals.

When the vehicle is unlocked, the engine stop switch is hit " ", and the black watch pen can select any of the nearest bolts connected to the frame. When the brake lever is pinched and the start button is pressed, the voltage measured between the yellow/red line and the ground wire should be the battery voltage.

2.2 Ground wire

The vehicle is locked when the power is off. Turn the multimeter to the buzzer setting, connect one to the green/red line, and one to any bolt connected to the frame, and it should be able to turn on when you press the start button.

3. Check the starter relay

Connect the 12V battery directly to the relay with thicker wires. Use the multimeter's buzzer to measure the green/red and red-yellow lines should be able to turn on, and should be disconnected when the battery is disconnected.

The rated voltage of the starting relay is DC 12V, the operating temperature is -40~+80°C, the operating voltage is DC≤7.5V (20°C), the recovery voltage is DC≤3.5V (20°C), and the coil current is 4A (12V 20°C) or less. Insulation resistance DC500V megohmmeter 5MΩ or more.

The detection methods are as follows:

After pulling out the relay plug, use the buzzer of the multimeter to measure that pins 1 and 2 should be normally closed, and the buzzer of the multimeter should sound at this time; Connecting pins 3 and 4 is normally open at this time, and the buzzer should not sound. Connect the No. 1 and No. 2 pins to the battery or DC12V power supply with wires, and measure the buzzer sound of the 3 and 4 pins to indicate that the relay is normal, otherwise it is abnormal and needs to be replaced.

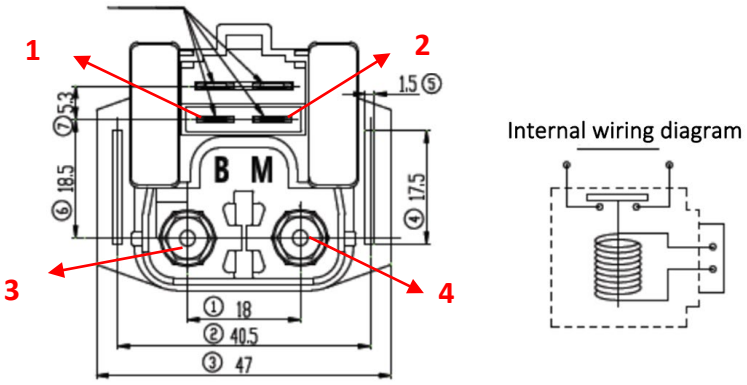

4. Disassemble and assemble the starter relay

After lifting the white protective cover of the starter relay, remove the M6 bolt with the 8# sleeve, and screw the bolt back after taking out the wire to prevent loss; Remove the other end in the same way. Unplug the relay connector.

When reinstalling the relay, the red wire is installed on the threaded hole of the relay marked "B", and the black wire is installed on the threaded hole of the relay marked "M". Make sure the protective cap is closed after the screws are tightened, and then plug in the relay connector.

6. Fuel supply system

Pre-Service Notice

1. Bending or twisting the control cable will affect the smooth operation and may cause a short circuit or open circuit, resulting in loss of control of the vehicle.
2. The operation should be carried out in an open and ventilated place. Smoking, phone calling, and all other behaviors that may cause sparks are prohibited at the work site.
3. Before operation, the high-pressure fuel pipe should be depressurized, and the method is as follows: unplug the fuel pump, start the engine and idle until the engine is turned off. Turn the engine off switch to "", and lock the vehicle after powering off.
4. Do not manually open the throttle body after the throttle cable is removed, which may lead to abnormal idling.
5. After removing the throttle valve body, use masking paper or clean non-woven fabric to block the air intake to prevent foreign objects from falling into the engine.
6. Do not destroy or operate the throttle valve body, which may cause abnormal throttle operation.
7. After removing the throttle valve body, prevent dust or foreign matter from entering the throttle hole or air passage. If necessary, it can be cleaned with dry compressed air.
8. It is forbidden to loosen or tighten the bolts or nuts marked with a marker on the throttle, which may cause abnormal throttle opening and closing and idle control.
9. Carburetor cleaner cannot be used.
10. The parts of the throttle valve body not indicated in this manual shall not be disassembled.
11. f there is a “ ” symbol on the right side of the step, you can click to quickly jump to the corresponding step.

CAUTION

●After reinstalling the battery or EFI parts, the EFI system needs to be reset. For specific operation, please refer to the precautions in the driver's manual or the throttle valve body section of this manual.

Fuel tank disassembly

Note:

●The dismantling site must be ventilated and fire prevention should be paid attention to. The details are described in the previous section and will not be repeated here.

●Use the pump first or wait until the fuel in the tank is about to be consumed before dismantling.

●Pay attention to protect the fuel outlet of the fuel pump, and only pull out the high-pressure fuel pipe axially. Be careful not to force the port radially or press out.

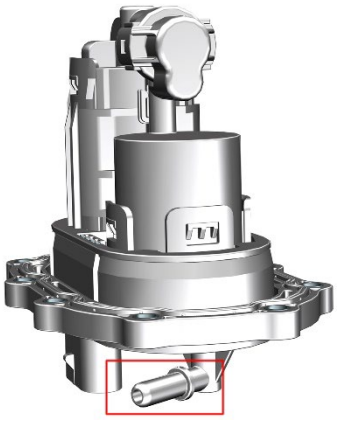

1. Disassemble the fuel tank assembly

a. Refer to the a~h steps of "replacing the high-pressure fuel pipe" in the fuel pipe, first remove the fuel pump plug, start the engine and idle until the engine stalls. Turn the engine off switch to "", lock the vehicle after powering off, pull out the high-pressure fuel pipe at the end of the fuel pump, unplug the carbon canister snorkel and remove the fuel tank assembly.

b. Use 4# hexagon to remove the bolts (1) and bolts (5) on the fixing bracket of the left and right decorative covers, and remove the hook (4). Remove the 2 bolts (3) with a cross batch, and then remove the washer (2) and the left and right decorative cover fixing brackets.

c. Remove 4 bolts with a 4# hexagon tool.

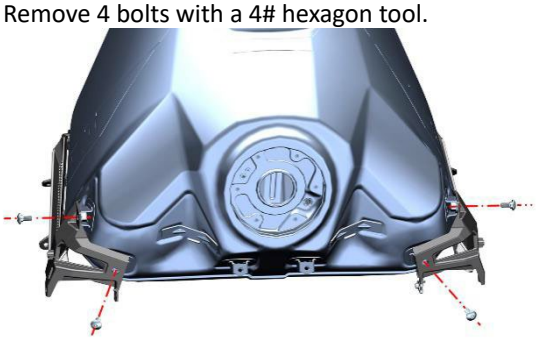

d. Push the left and right cover mesh lining plate assembly in the direction of the arrow, and remove the assembly after pushing to the hole position.

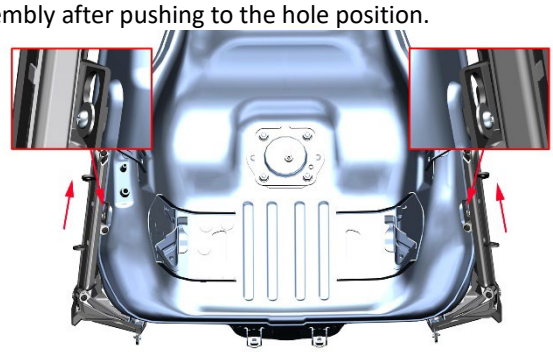

e. Remove the 2 bolts with a cross batch and remove the spacer.

2. Disassemble the fuel pump

Flip the tank assembly over so that the fuel pump is positioned securely facing up. You can flip the small wooden table to ground the table and put the fuel tank assembly on it.

Before June 23,2025 use the 10# sleeve and after June 24,2025 use 8# sleeve diagonally to loosen the 9 bolts in turn and remove.

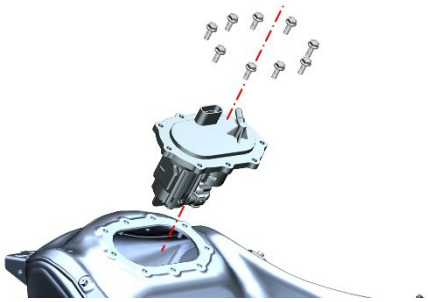

When reassembling, it is necessary to pre-tighten diagonally and then tighten 9 bolts, otherwise the uneven compression of the sealing rubber ring of the fuel pump will easily lead to leakage and potential safety hazards.

The fuel pump is a precision component, which needs to be assembled in a dust-free workshop and requires strict testing, so it is forbidden to disassemble it by yourself. Therefore, the fuel pump decomposition process is not explained here.

3. Disassemble the fuel level sensor

Place the removed tank assembly and it is recommended to protect the fuel pump at the bottom of the tank.

Remove the 4 bolts with the 10# sleeve and pull the sensor outward. Note that it should not be forcibly pulled, so as not to cause the deformation of the float connecting rod and cause the deviation of the fuel quantity display to become larger.

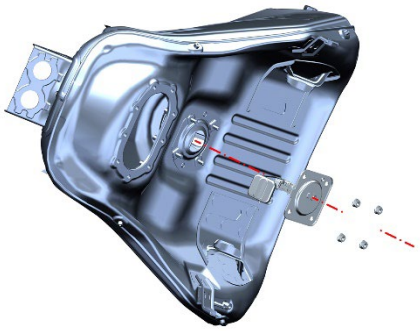

When reassembling, it is necessary to pre-tighten diagonally and then tighten 4 bolts, otherwise the sealing rubber ring of the fuel level sensor is compressed unevenly, which will easily lead to leakage and cause potential safety hazards.

4. Disassemble the external materials and parts of the fuel tank assembly

The battery rubber pad is attached to the tank shell and is difficult to remove. If you need to remove it, you can remove it after heating it slightly with a heat gun , or use a self-adhesive cleaner to remove it.

Examination

1. Fuel pressure test

The test methods are detailed in the Fuel Pumps section of the Maintenance chapter.

2. Fuel pump inspection

Unlock the vehicle, hit the engine stop switch“ ” and you should be able to hear the sound of the fuel pump running. If you don't hear the sound of the fuel pump running, turn off the ignition and power first.

Refer to the steps for replacing the high-pressure fuel line in the "Maintenance" chapter and unplug the fuel pump.

Use a multimeter to measure the voltage at the cable end of the fuel pump plug, unlock the vehicle, and the fuel pump accumulates pressure for about 5 seconds when the engine stop switch hits " ", during which the battery voltage should be measured.

If the starting engine can still measure the battery voltage after the pressure storage is completed, it is necessary to check whether the fuel pump relay is normal, if the relay is normal, the fuel pump is abnormal and needs to be replaced.

3. Fuel level sensor

Use the multimeter resistance file to measure the resistance. Lowest (empty fuel): 287~313Ω, highest (full fuel): 27~50Ω.

When pulling the float connecting rod, there should be no stagnation during rotation and the contact should be good.

Check the appearance of the float and there should be no damage.

7. Cooling system and air intake system

Pre-Service Notice

1. For the corresponding precautions about coolant (antifreeze), please refer to the radiator section of the "Maintenance" chapter of this manual.

2. Check the cooling water pipe; Check the coolant level height, adding and draining the coolant is detailed in the radiator section of the Maintenance chapter and will not be repeated here.

Tool:

Hoop clamps	Multimeter	Air source with adjustable air pressure	Homemade head*

*It can be plugged with a soft rubber plug, or folded in half with a hose and tied with a rope or wire as a plug for the small tube to test the tightness of the water tank filler. A section of the water pipe with an inner diameter of 16mm can be found and assembled firmly with a suitable air pipe joint and clamp at one end to test the tightness of the water tank filling port and the main water tank and small water tank.

3. If there is a “ ”symbol on the right side of the step, you can click to quickly jump to the corresponding step.

WARNING

●When the engine is not completely cooled, opening the water tank lid may cause the coolant to spray out and cause burns. Be sure to wait for the tank and engine to cool down before opening the tank cover.

Troubleshooting

1. The engine temperature is too high:

a. The coolant temperature of the instrument is abnormal or the water temperature sensor is abnormal;
b. Thermostat abnormality;
c. Insufficient coolant;
d. Blockage of radiators, water pipes and water tanks;
e. There is air entering the cooling system;
f. Failure of cooling fan;
g. Cooling fan relay failure (see EFI relay section of the chapter "EFI System").

2. The engine temperature is too low：

a. The coolant temperature of the instrument is abnormal or the water temperature sensor is abnormal;
b. Thermostat abnormality;
c. Cooling fan relay failure (see the EFI relay section of the chapter "EFI System").

3. Coolant leakage

a. Failure of the water pump seal;
b. O-ring is damaged or aging and fails;
c. Radiator cover is damaged;
d. Broken or aging gasket failure;
e. Ruptured water pipes;
f. Radiator breakage.

Cooling system distribution map

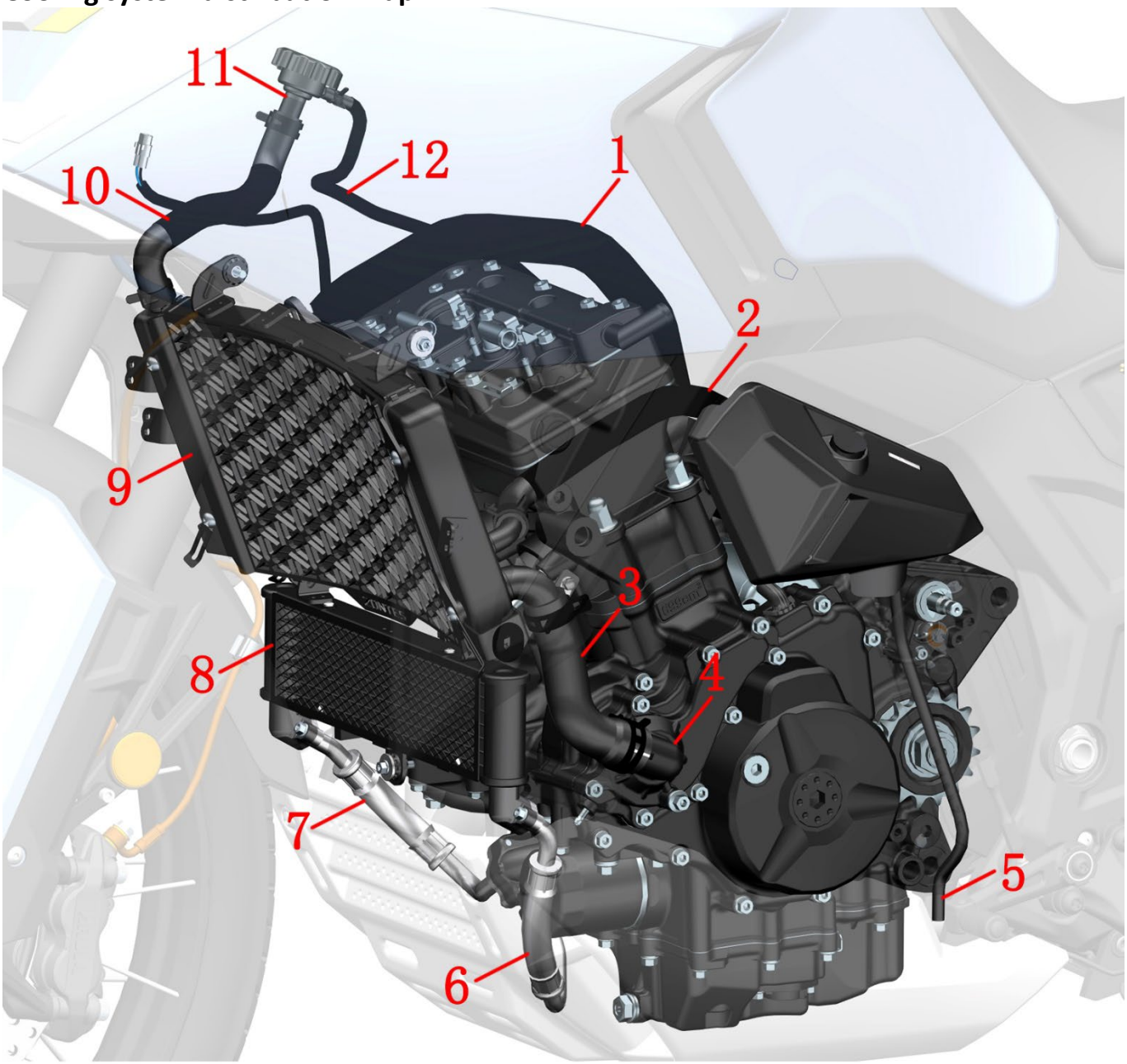

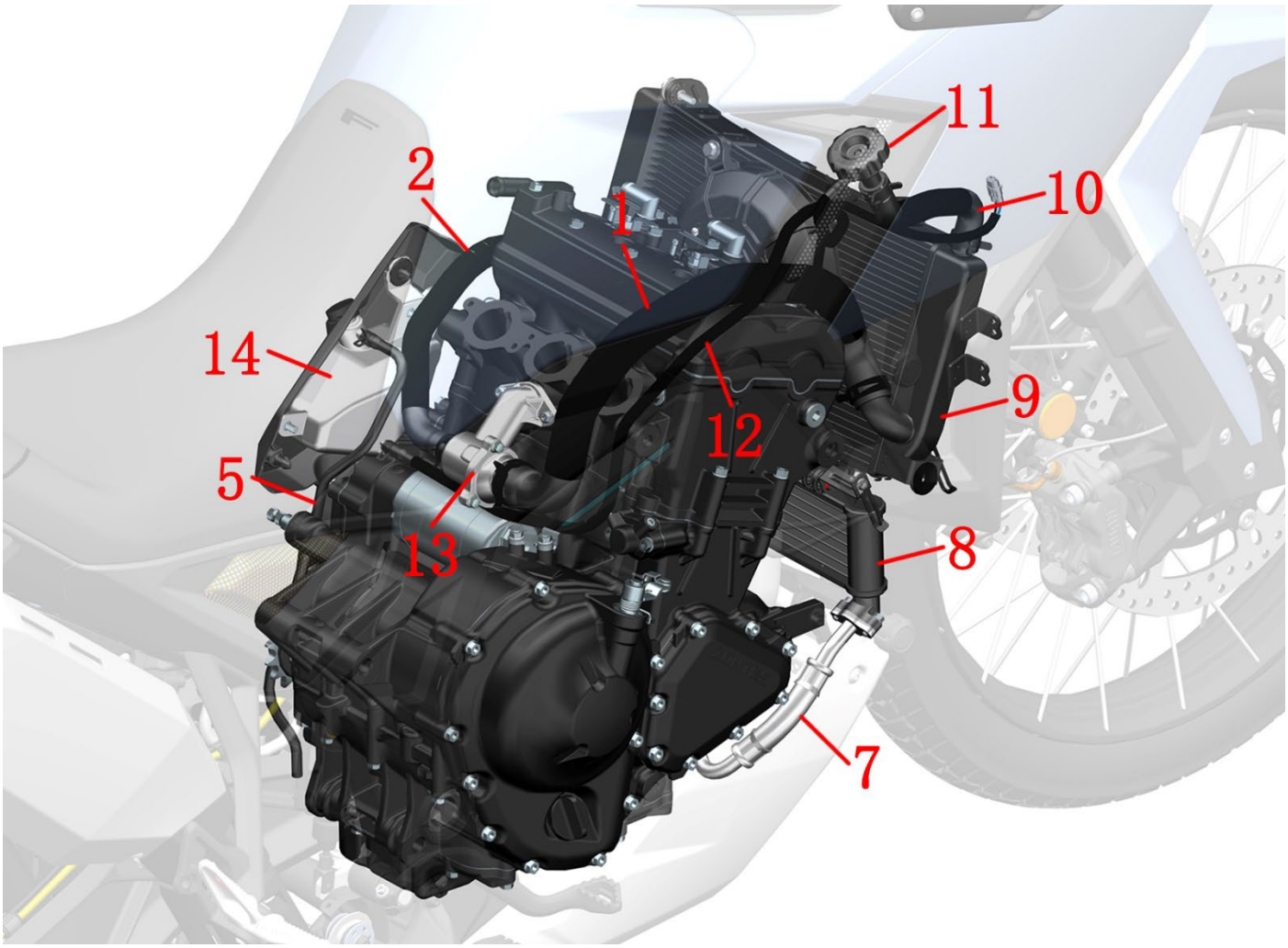

1-ZT703-F Main Water Tank Inlet Pipe 2-ZT703-F Small Circulation Water Pipe 3-ZT703-F Engine Water Inlet Pipe 4-Water Pump Cover Assembly 5-ZT310-R Auxiliary Water Tank Leaking Pipe 6-ZT703-F Engine Outlet Pipe 7-ZT703-F Engine Inlet Pipe 8-ZT703-F Oil Cooler 9-ZT703-F Main Water Tank 10-ZT703-F Water Tank Refill Connecting Water Pipe 11-ZT703-F Water Tank Refill 12-ZT703-F auxiliary water tank connected to water pipe 13-ZT703 thermostat 14-ZT703-F auxiliary water tank

Schematic diagram of coolant flow

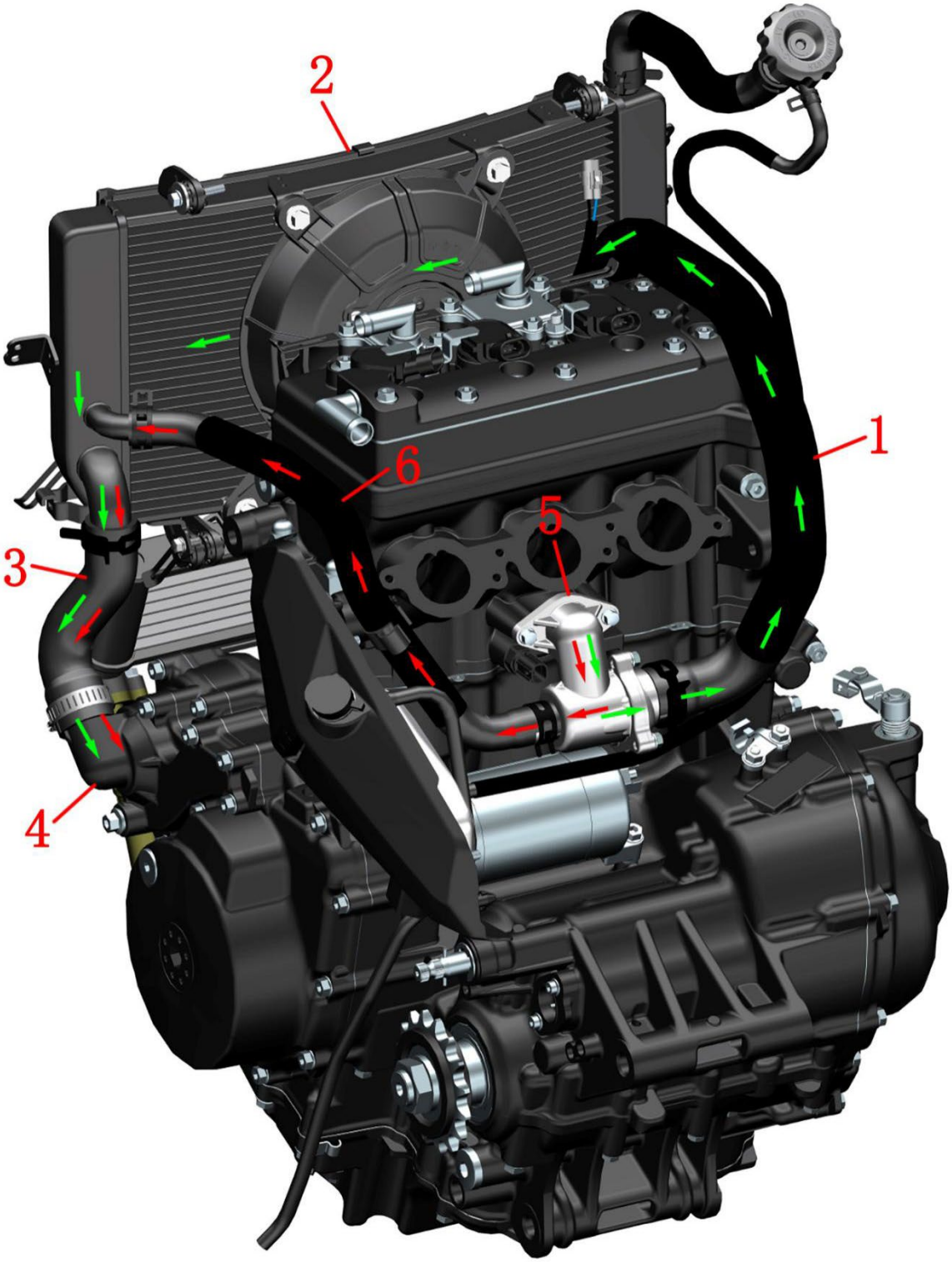

1-Main water tank inlet pipe 2-Main water tank 3-Engine water inlet pipe 4-Water pump assembly 5-Thermostat assembly 6-Small circulation water pipe

703F Water Cooling System:

Small circle (indicated by red arrows):

Pump assemblies → small circulation water pipe→ main water tank (not cooled), → engine inlet pipe→ pump assembly

Large circle (indicated by green arrows):

Pump assemblies → main tank inlet pipe→ main tank → engine inlet pipe → pump assembly

Disassembly of the cooling system

Note:

●Before disassembly, refer to the coolant discharge step in the cooling system section of the "Maintenance" chapter to drain all the coolant.

●This chapter is to disassemble the cooling system, if you only need to disassemble a component separately, please read the whole chapter and have a certain understanding of the cooling system before disassembling it yourself.

●During the disassembly process, wear waterproof gloves, protective glasses and other protective measures, and avoid coolant contact with the skin.

●Be sure to wait until the engine, radiator, and muffler are completely cooled before disassembly.

1. Disassemble the oil cooler and tubing assembly

a. Refer to the steps of "Disassembly of Cover Parts" to remove the guard bar and the lower assembly of the left and right surroundings.

b. Refer to "Removal of Engine Guard" to remove the engine guard plate and place the oil drain plate under the oil cooler.

c. Use the 8# sleeve to remove 1 M6×12 bolt (1) on the left side of the oil cooler, and pull out the lower left bracket (2) of the main water tank; Use the 8# sleeve to remove 1 M6×22 bolt (3) under the front of the oil cooler; Use the 8# sleeve to remove 1 M6×12 bolt (1) on the right side of the oil cooler, and pull out the lower right bracket (4) of the main water tank. Note: The wire clamp (5) does not need to be disassembled, and the wiring harness can be continued to be fixed.

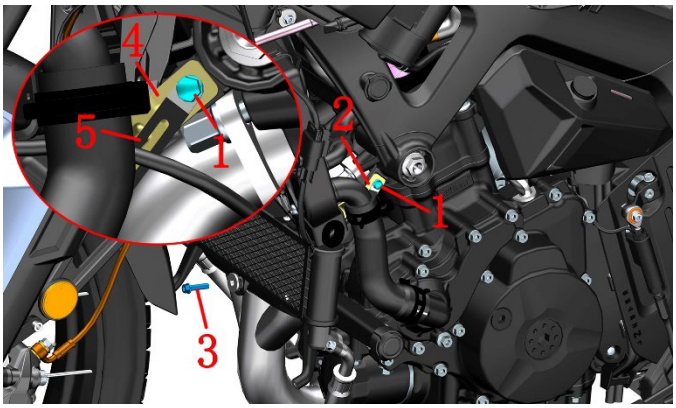

d. Use the 8# sleeve to remove the 2 M6×16 bolts (8) on the engine oil outlet pipe (6); Use the 8# sleeve to remove the 2 M6×16 bolts (8) on the engine inlet pipe (7); Remove the oil cooler. Then use the 8# sleeve to remove the two M6×22 bolts (3) on the engine outlet pipe (6) and the two M6×22 bolts (3) on the engine oil inlet pipe (7), and remove the engine oil outlet pipe (6) and the engine oil inlet pipe (7). Note: There are O-rings at both ends of the tubing, and the O-rings need to be checked for damage or trimming during installation, and if so, they need to be replaced.

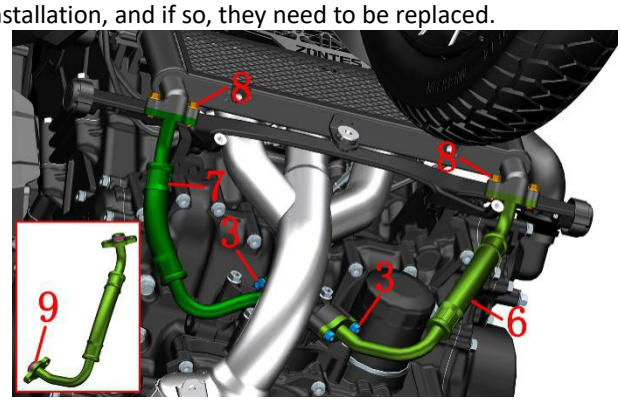

2. Disassemble the main water tank assembly

a. Use the 8# sleeve to remove 1 M6×30 bolt (10) on the left side of the main water tank; Use the 8# sleeve to remove the bolt (3) of 1 M6×22 on the right side of the main water tank.

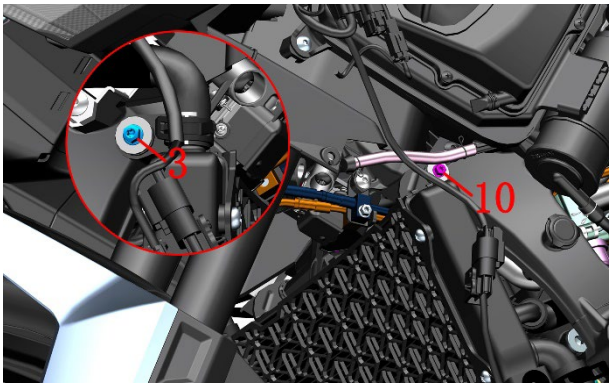

b. Untie the 2 wire clamps (5) on the main water tank, and remove the wire harness fixed on the water tank after arranging.

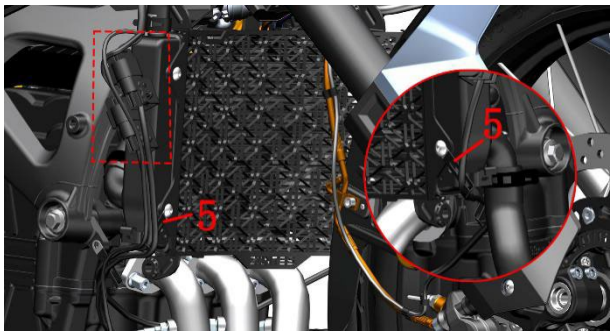

c. use hoop pliers to remove the hoop (12) of ϕ22 and the hoop (13) of ϕ32 on the small circulating water pipe (12) and the engine water inlet pipe (14); Then use hoop pliers to remove the hoop (12) of ϕ22 and the hoop (13) of ϕ32 on the water inlet pipe (16) of the water inlet pipe (15) of the main water tank; Once the hoop is removed, the entire main tank can be removed.

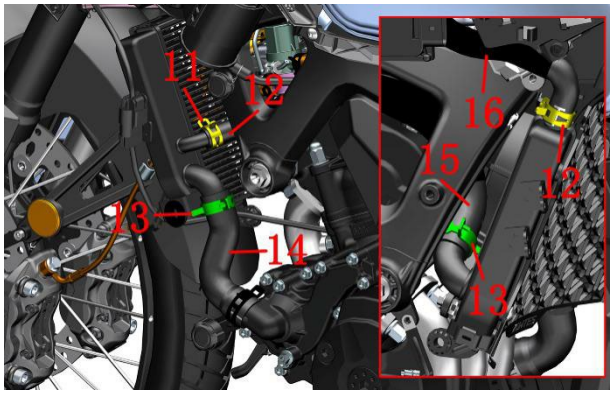

3. Disassemble the water pipe and auxiliary water tank components

a. Use a hoop clamp to remove the hoop (17) of the engine water inlet pipe (14), and the engine water inlet pipe (14) can be unplugged.

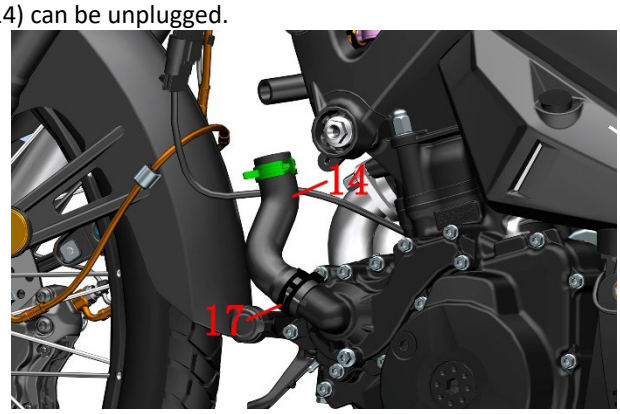

b. Remove the auxiliary water tank decorative cover (18) forcefully in the horizontal direction; use the plum blossom T25 hexagon to remove the two shoulder bolts (19) that fix the auxiliary water tank; then use the needle-nose pliers to loosen the ϕ10.5 hoop (22) on the auxiliary water tank connecting water pipe (23), remove the auxiliary water tank (20) and the auxiliary water tank leaking pipe (21).

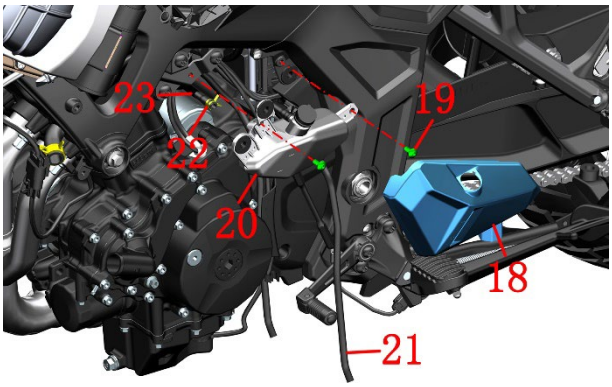

c. After arranging the wiring harness, use the hoop pliers to remove the ϕ24 hoop (24) on the small circulating water pipe (12) connected to the thermostat (25) from the gap removed from the auxiliary water tank, and then grab one end of the small circulating water pipe (12) and pull out the small circulating water pipe.

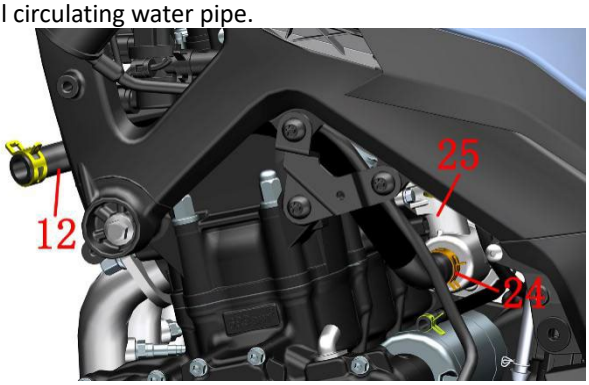

d. Remove the charging port holder decorative cover (26) in the horizontal direction; remove the connector of the charging port holder from the charging port holder mounting plate (27); Use the plum T25 hexagon inside hexagon to remove the 2 shoulder bolts (19) on the charging port seat mounting plate and take out the charging port seat mounting plate (27).

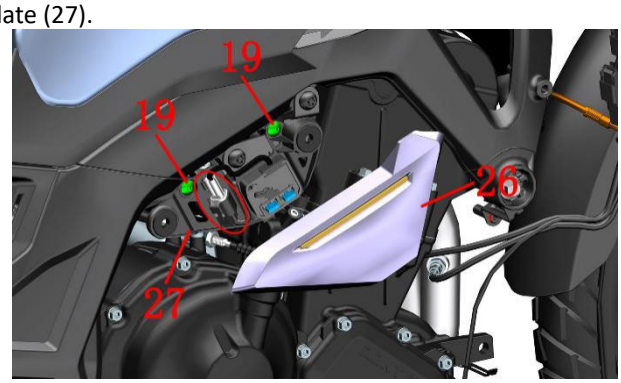

e. After tidying up the wiring harness, use the hoop pliers to remove the ϕ36 hoop (28) connecting the thermostat (25) from the gap removed from the charging port base, and then grab one end of the main water tank water inlet pipe (15) to pull out the main water tank water inlet pipe (15).

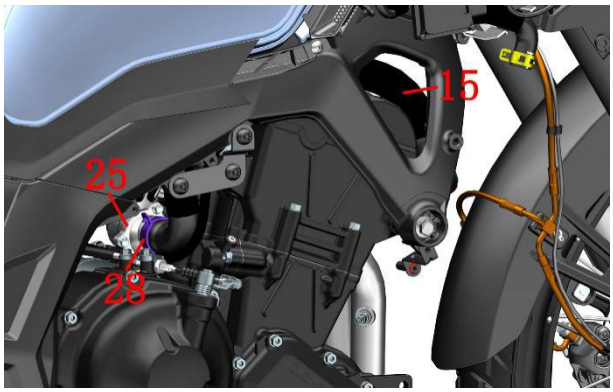

f. Find the fog lamp drive box on the right side of the vehicle and use the Torx T25 hexagon to remove 2 fixed axle shoulder bolts (19), remove the fog lamp drive box.

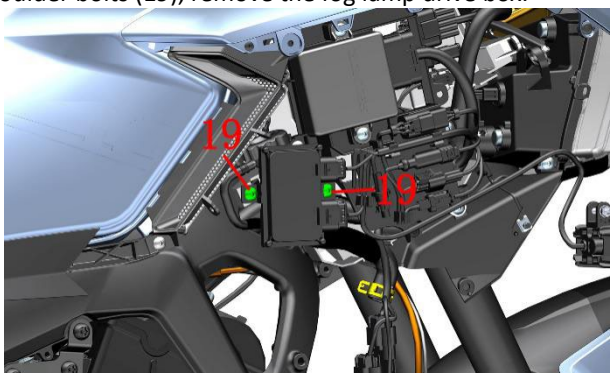

g. Use hoop pliers to remove the ϕ9 hoop (29) on the water pipe (23) connecting the auxiliary water tank, and take out the water pipe (16) connected with the water tank water filling port (30) and the water filling port; If it is necessary to separate the water tank water inlet (30) and the water inlet to connect the water pipe (16), use the hoop pliers to remove the ϕ22 hoop (12) connected in the middle and pull out the water tank water inlet.

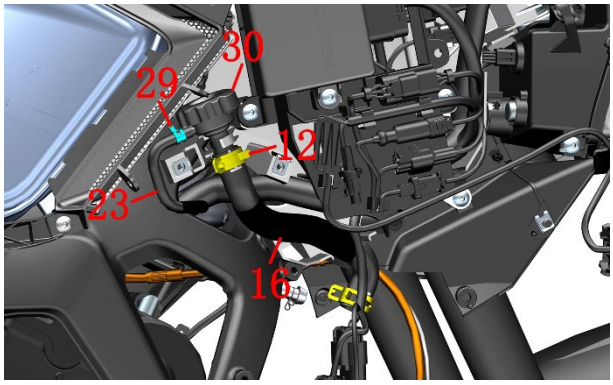

Use an 8# torx wrench to remove the bolts (25) of M2 M6×22 on the thermostat (3), and then take out the thermostat (25).

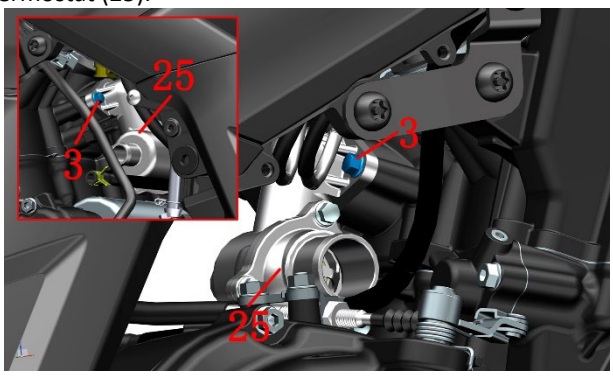

Cooling system accessories

Note:

●Special ventilation fixtures (gas pressure reducing valves, air guns, sealing tubes) are required for testing.

●After the water soaking inspection is completed, wipe the water stains clean in time, or use a dust blowing gun to blow dry. If the main water tank and small water tank are dried with dust blowing loose, attention should be paid to the wind pressure should not be too large, and it should be kept away from the heat dissipation fins, so as not to cause damage or deformation of the heat dissipation fins.

●During the air tightness test, the compressed air of 160 kPa shall be introduced except that the air pressure shall be specified. The parts shall be soaked in water and kept for 10 s without bubbles. If there are bubbles, the parts shall be replaced if they leak.

●The heat dissipation fin is allowed to have a small amount of lodging deformation, if the lodging area is too large and affects the heat dissipation effect, it is recommended to replace it. A small amount of deformation can be straightened with a small flathead screwdriver.

●It is forbidden to use high-pressure water guns or high-pressure air to directly flush or blow the heat sink of the main water tank and small water tank.

●Before further testing, the appearance should be checked for signs of leakage. If there is a slight leak, try to repair it, otherwise it should be replaced.

1. The main water tank

Check whether the buffer adhesive is aged and cracked.

Plug the A, B, and C ports with a homemade head, and ventilate from the D port to check the tightness. A gas with a pressure of 160kPa (1.63 Kgf/cm2, 23.2 psi) is introduced to ensure that there is no air leakage at the nozzle position, and the water tank is immersed in water and allowed to stand for 10s to observe whether there are bubbles.

Check whether the fan and grille are firmly assembled, and the rotating fan blades should be free of jamming. Check whether the buffer adhesive is aged and cracked. Check the fan cable for damage.

The fan plug is positive in blue and negative in black. Find a battery with sufficient power and connect the cable according to the positive and negative poles, and check whether the fan is pumping backwards.

Compressed air with low air pressure can be blown to the tank from the back to remove foreign matter from the surface. Or use a water gun with a lower pressure water gun to spray the heat sink at a distance to clean the surface of foreign objects.

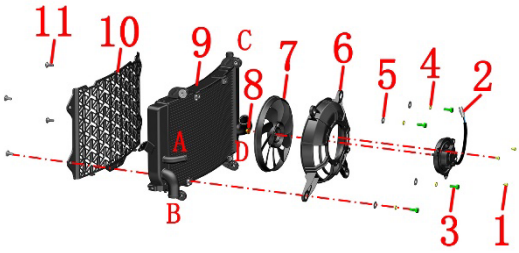

1-Fan motor bolt*3 2-Fan motor 3-Fan passport bolt*4 4-Spring pad*4 5-Gasket*4 6-Fan guard 7-Fan 8-Fan nut 9-Water tank 10-Water tank front guard 11-Shoulder bolt*4

2. Water tank filler

2.1 Overall tightness inspection

Seal the small tube and ventilate the large tube for air tightness check. A gas with a pressure of 160kPa (1.63 Kgf/cm2, 23.2 psi) is introduced to ensure that there is no air leakage at the nozzle position, and the water filling port is put into the water and let stand for 10s to observe whether there are bubbles.

2.2 Pressure relief valve inspection

Inject 100kPa compressed air into the large tube once, put the water filling port into the water and let it stand for 10s, the small tube should have no bubbles, and then raise the compressed air to 110kPa There should be bubbles.

3. An auxiliary water tank

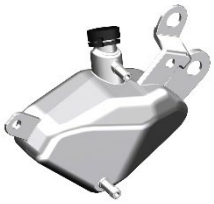

.Check whether the plastic cover is aged and cracked, and if so, it needs to be replaced. If the appearance is good, the air tightness inspection will be carried out.

Seal the two small water outlets, and open the black plastic cover of the water tank for air tightness inspection.

Continue to block the small water outlet, pour water into the auxiliary water tank and turn the auxiliary water tank upside down, and observe whether the rubber cover of the water tank is seeping, if there is seepage, it is unqualified. After the tightness check, pour out the water, remove the plug and let the auxiliary tank dry naturally or blow dry with a blow gun.

4. Oil cooler

4.1 Air tightness inspection

Check whether the buffer adhesive is aged and cracked.

Plug any end of the oil cooler connector and pass compressed air with a pressure of 200 kPa from the other side of the connector to ensure that there is no air leakage at the nozzle position.

4.2 Ventilation test

Blow air from the joint on one side, check whether the joint on the other side has air blowing, if there is air blowing, it is normal, otherwise it is badly blocked.

Compressed air with low air pressure can be blown to the tank from the back to remove foreign matter from the surface. Or use a water gun with a lower pressure water gun to spray the heat sink at a distance to clean the surface of foreign objects.

5. Thermostat

5.1 Inspection of thermostat

Check the appearance for damage and leakage;

Simple test method (test on the whole vehicle):

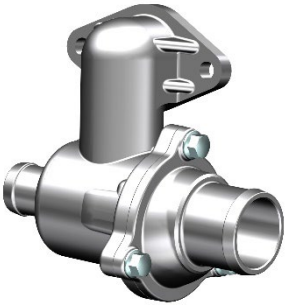

After the cold vehicle starts, open the water inlet cover immediately, if the liquid level does not fluctuate, the thermostat is normal, otherwise it is abnormal. When the water temperature is lower than 80 °C, the thermostat should be in the closed state of the valve, and when the temperature is higher than the initial opening temperature, the expansion valve of the expansion cylinder will gradually open, and the circulating coolant in the radiator will begin to flow.

After the temperature rises, check the inlet pipe of the small water tank, which should clearly feel the signs of water flow or feel the temperature of the pipe wall, otherwise the pump or water channel will be blocked.

When the temperature reaches 90°C, the heating rate slows down, and the thermostat is working properly. If the water temperature rises rapidly, when the internal pressure reaches a certain level, the boiling water suddenly overflows, indicating that the valve is stuck.

When there is stuck or the closure is not tight, it can be removed for cleaning or repair, otherwise it should be replaced.

5.2 Fault phenomenon

When the water temperature gauge indicates that the indication is high, the engine temperature is overheated, but the coolant temperature in the water tank is not high, it is not hot when touching the radiator with your hands, and the fan of the small water tank rotates normally. It indicates that the general circulation is blocked, and it can be preliminarily judged to be abnormal thermostat.

There are generally two types of thermostat abnormalities:

a. The main valve is closed for a long time, and the coolant is circulated according to the small circulation route regardless of the water temperature, resulting in overheating of the engine.

b. The main valve is open for a long time, and the phenomenon is that the water temperature rises slowly when starting, especially in winter, the slow rise of the coolant temperature makes the engine not work at normal temperature, and the engine temperature is too low.

6. Water pipes

Check whether there are cracks, bulges and other undesirable phenomena on the surface of each water pipe. Plug one end of the hose, ventilate the other end and put the hose into the nozzle to check for air bubbles and replace them if so.

7. Tubing

Use a plug to block one end of the tubing, and introduce a stream of water with a water pressure of 1960 kPa or compressed air with an air pressure of 980 kPa to the other end, and check for leakage within 1 minute. A leak is an indication that the tubing needs to be replaced.

Air intake system

Disassembly of the air filter

1. Disassembly of the carbon canister

a. Refer to the steps of "Replacing High-pressure fuel pipe" to remove the fuel tank assembly.

b. Use hoop pliers to remove the rubber tube at one end of the carbon canister connected to the solenoid valve of the carbon canister.

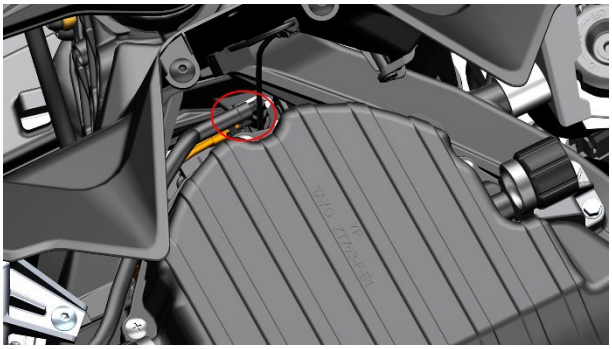

c.Remove the canister assembly (1) from the air inlet cavity assembly (2) on the left side of the air filter according to the direction of the large arrow, and pull out the rubber tube (1) on the canister assembly (1) in the direction of the small arrow, and remove the canister assembly (1).

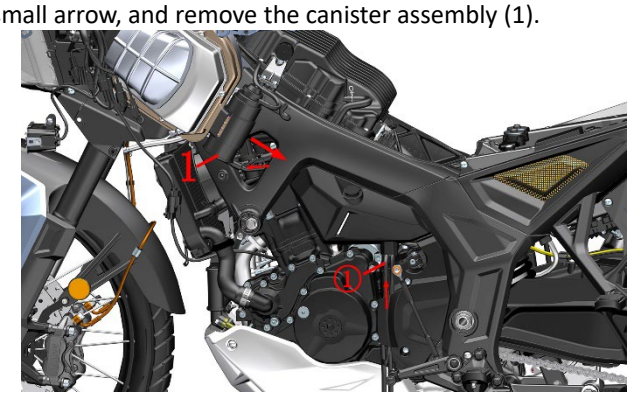

2. Disassembly of the air inlet cavity assembly on the left side of the air filter

a. Arrange the wiring harness and joints around the air inlet cavity assembly (2) on the left side of the air filter, and use the 4# hexagon to remove the 5 shoulder bolts (3) that fix the air inlet cavity assembly (2) on the left side of the air filter.

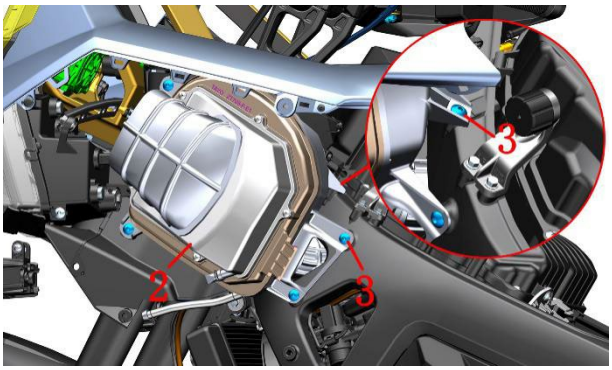

b. Use the 4# hexagon to pass through the Φ59×9 pipe hoop assembly (4) on the connecting pipe assembly (5) of the air filter through the gap of the air inlet cavity assembly (2) on the left side of the air filter, and then pull out the air inlet cavity assembly (2) on the left side of the air filter in the direction of the arrow, and remove the air inlet cavity assembly (2) on the left side of the air filter.

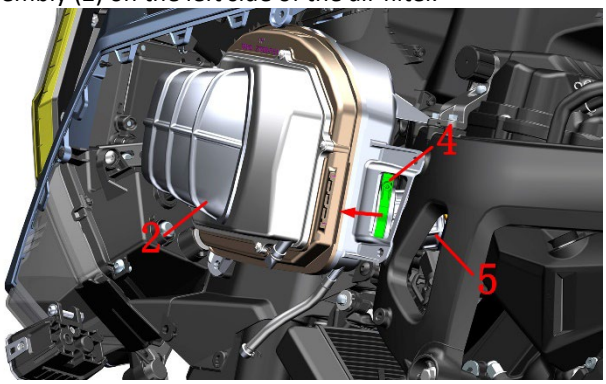

3. Disassembly of the air filter housing

a. Use the 8# sleeve to remove the bolts (6) of M6×16 on the front mounting bracket of the 4 fuel tanks; Use the plum blossom T25 hexagon to remove the 1 shoulder bolt (3) on the fixed plate of the empty filter wire, and arrange the wiring harness and joints; Use hoop forceps to remove the hoop (2) on the air filter housing and pull out the rubber tube (3);

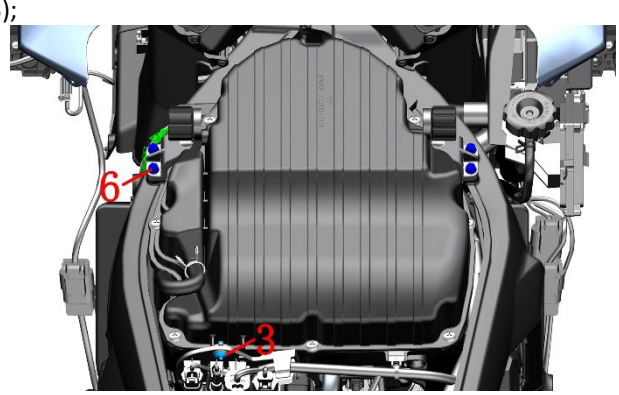

b. Use hoop forceps to remove the hoop (2) on the air filter housing and pull out the rubber tube (3); Use hoop forceps to remove the clamp (4) on the rubber tube of the stepper motor (7), and pull out the rubber tube (7) of the stepper motor;

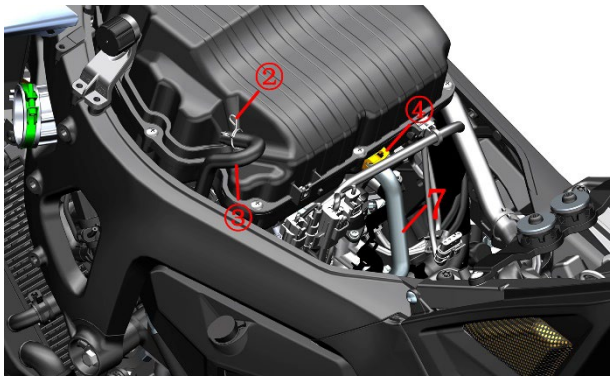

c.Lift the air filter slightly, use the hoop clamp to remove the hoop (5) on the rubber pipe (8) of the air supply valve, and the air filter housing can be taken out after removing the rubber pipe of the air supply valve.

Exploded view of air filter accessories:

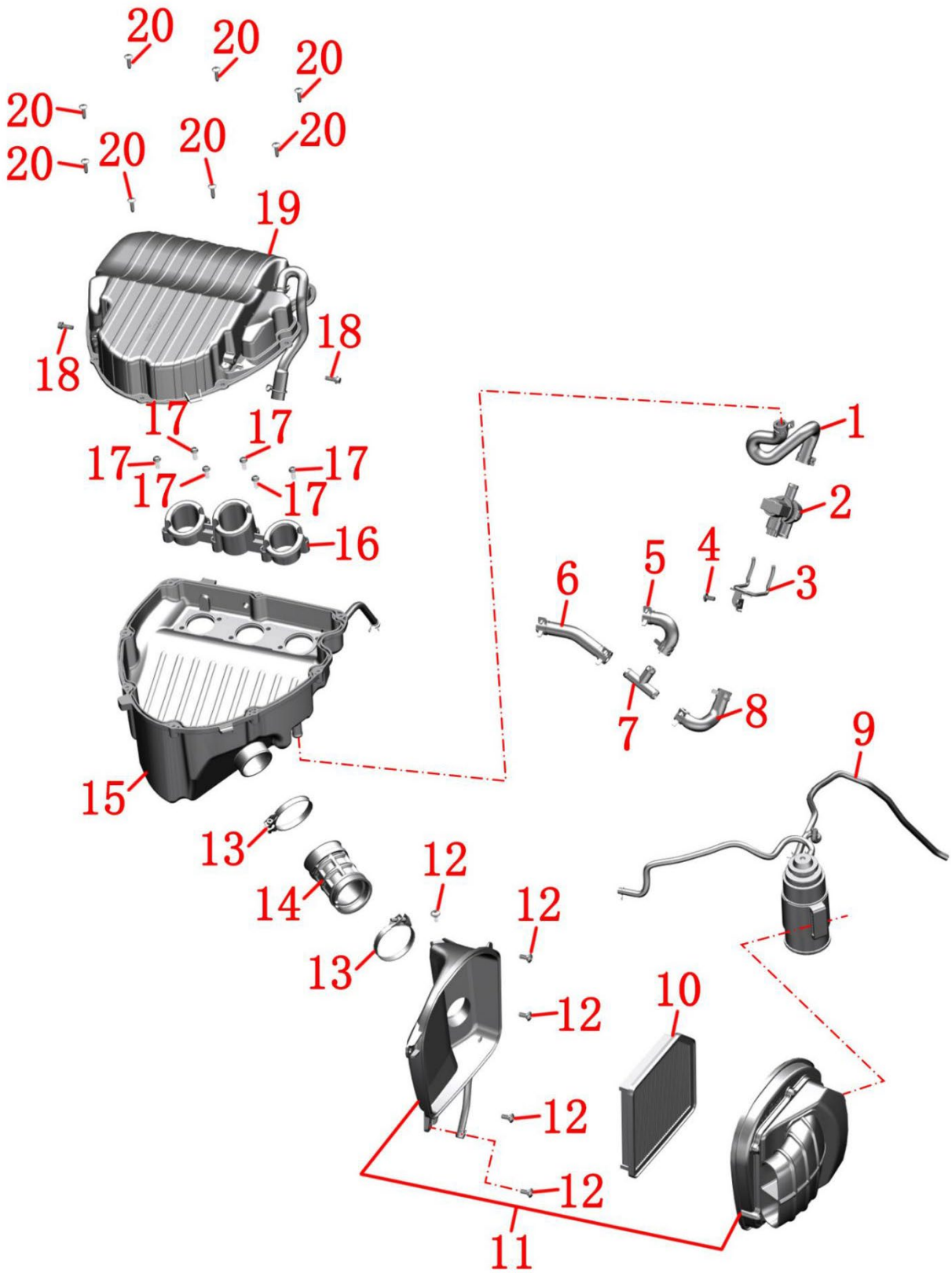

1-ZT700-F Air supply valve Rubber Hose-4 2-YH Secondary Air supply valve 3-703F Air supply valve Bracket 4-Non-standard inner plum bolt M6×12 (304 stainless steel) 5-ZT700-F Air supply valve Rubber Hose-2 6-ZT700-F Air supply valve Rubber Hose-1 7-ZT369MU Nylon Tee Pipe (ϕ14) 8-ZT700-F Air supply valve Rubber Hose-3 9-ZT703-F Carbon Canister Assy 10-ZT703-F Air Filter Cartridge Assembly 11- ZT703-F Air Filter Left Air Inlet cavity Assembly 12-Inner Torx shoulder screw M6×14+ϕ8.5×2.9 (304 stainless steel) 13-59×9 Pipe Hoop Assembly 14-ZT703-F Air Filter Connecting Pipe Assembly 15-ZT703-F Air Filter Lower Housing Assembly 16-ZT703-F Air Filter Outlet Pipe Assembly 17-Non-standard bolt M6×16 (environmental color) 18-GB16674M6×16 hexagonal flange bolt (9.8 grade/environmental color zinc)19-ZT703-F Air Filter Upper Housing Assembly 20-GB845ST4.8×20 (Hirao)

Air Filter System Accessories:

1. A carbon canister

Check whether the adsorption pipe, desorption pipe and negative pressure pipe on the carbon canister are aging. Check whether the adsorption pipe and desorption pipe harden under the erosion of gasoline for a long time.

Remove the adsorption pipe and desorption pipe on the carbon canister, block one end of the pipe with the corresponding head, and pass in compressed air with 10-20kPa air pressure from the other end, and then put it in water for 10 seconds to check whether the rubber pipe is leaking.

After removing the adsorption pipe, desorption pipe and negative pressure pipe on the carbon canister, check whether there is toner falling off all outlets, if a very small part of the toner flies out is normal, if a large amount of toner falls, the carbon canister needs to be replaced.

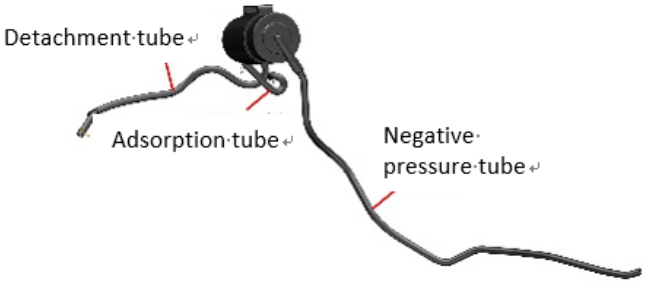

2. YH secondary air supply valve

Use a multimeter to detect the pins of the connector on the air supply valve to detect whether the resistance value is 20±2Ω; If the resistance value exceeds this range, the air supply valve needs to be replaced.

Use an air puff gun to blow on one nozzle above the air supply valve to detect if there is air ejecting from the other nozzle.

3. The air inlet cavity assembly on the left side of the air filter

Check whether there are cracks, deformations and other defects around the air inlet cavity; Check whether the sealant at the connection cavity of the inlet pipe is connected and glued in place, and whether it falls off.

Check the waste pipe under the inlet cavity assembly for debris, and it is recommended to clean the waste pipe every time you replace the air filter.

4. Connecting pipes

Check whether there are cracks, bulges and other undesirable phenomena on the surface of each connecting pipe. Plug one end of the connecting pipe, ventilate the other end and place the connecting pipe into the water nozzle, check for air bubbles, and replace if so.

5. Air filter housing

Check whether there are defects such as damage or pits on the surface of the shell, check whether there are signs of falling off of various inserts on the shell, and whether the threads have slippage.

8. Braking system

Pre-Service Notice

1. The content of this chapter requires certain maintenance experience, and it is recommended to go to a maintenance unit with maintenance qualifications for inspection or maintenance.
2. Frequent inhalation of the dust generated by brake pads may have a certain impact on health regardless of the composition. Inhalation of dust particles should be avoided.
3. Do not use a dust blow gun or brush to clean the brake assembly, please use a vacuum cleaner.
4. Brake fluid should be avoided from dripping onto the paint surface of the covering parts or the surface of the parts, and if accidentally splashed, rinse with water immediately.
5. When disassembling the front disc brake main cylinder and the rear disc brake main cylinder, ensure that the brake fluid in the oil cup is in a horizontal position. Do not turn it upside down to avoid air entering, which will affect the braking effect, and in severe cases, it may cause braking failure and personal injury.

6. The steps for replacing the brake fluid and exhausting air are the same, and the detailed steps are shown in the brake fluid section of the chapter "Maintenance".
7. When the brake pad or brake disc is oily, the braking force will be reduced, the polluted brake pad should be replaced, and the oil stain of the brake disc can be removed with a good quality degreasing detergent.
8. After disassembling the lid of the oil cup of the main pump, it should prevent dust and water from entering.
9. If you need to add brake fluid after maintaining the braking system, you must use the newly unsealed DOT4 brake fluid. It is forbidden to mix with other brake fluids.
10. When the whole vehicle is powered on, switch and unplug the ABS hydraulic control unit, too high voltage may damage the hydraulic control unit. The whole vehicle must be powered off before maintenance.
11. The hydraulic control unit is a precision part, and it is forbidden to disassemble it for non-professionals.
12. If there is a “ 📖 ” symbol on the right side of the step, you can click to quickly jump to the corresponding step.
13. **For Brembo calipers, please refer to this section. The following illustrations use the J.JUAN caliper as a demonstration.**

⚠ DANGER

●If brake fluid is swallowed, contact a poison control center or hospital immediately; In case of accidental contact with eyes, rinse with water and seek medical attention immediately.
● Keep brake fluid away from children and pets.
● The vehicle must be parked on a level, stable ground or lifting platform.

⚠ WARNING

●Wear protective gloves/protective clothing/protective goggles/protective masks to maintain the braking system.
●It is strictly forbidden to flush the main pump directly with high-pressure water.

Troubleshooting

The brake handle is soft

a. Air enters the oil circuit of the braking system
b. Brake fluid leakage
c. Brake pads or discs are oily
d. Worn brake calipers or disc main cylinder piston seals
e. Worn brake pads or discs
f. Disc brake calipers are oil-stained
g. The disc brake main pump is oil-stained
h. The disc brake caliper slides inflexibly
i. Insufficient brake fluid
j. The brake oil circuit is not smooth
k. The brake disc is twisted and deformed
l. Disc brakes, calipers, pistons are worn and sticky
m. The disc brake main pump piston is worn and sticky

The brake handle is hard

a. The brake oil circuit is blocked
b. Disc brakes, calipers, pistons are worn and sticky
c. The disc brake main pump piston is worn and sticky
d. The disc brake caliper does not slide properly
e. Worn brake calipers or disc main cylinder piston seals

Disassemble the disc brake master cylinder and caliper

Attention:

●Precautions and brake fluid hazards have already been explained and will not be repeated here.
●Disassemble the caliper, and the ϕ15×ϕ10.2×1.5 copper pad at the brake hose at the main cylinder must be replaced to avoid leakage. The surface of the disc brake oil pipe bolt and the copper gasket can be reused if there is no scratch.
●Disassembling the main pump and caliper requires a high level of hands-on ability and is recommended to be carried out by a professional person or maintenance unit. The replaced waste brake fluid should be handed over to a professional unit for recycling and proper disposal.
●The consequences caused by human disassembly or improper assembly are the responsibility of the operator, and are not within the scope of the three guarantees.
●It should be operated in a dry, dust-free or no dust environment.

Disassemble the front disc brake main pump

a. Remove the nut at the bottom with a 10# sleeve and remove the spacer. Use a T25 Torx wrench to remove the hand guard bolts.

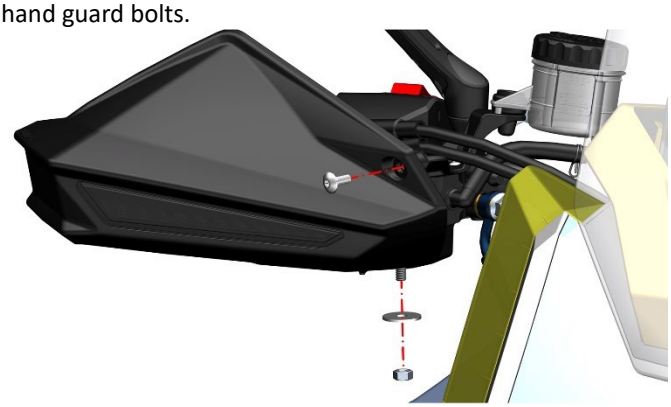

b. After grasping the front brake main cylinder, remove the 2 bolts with the 8# sleeve to remove the front disc brake half cover and the rearview mirror assembly.

c. Tilt the front brake main cylinder so that the bolts are facing up, wear waterproof gloves, remove the bolts with a 12# sleeve, remove the copper pad and remove the FMC-HU oil pipe, and pour out the brake fluid in the main cylinder. Bolt standard torque: 32N.m (3.3 kgf.m, 24 lbf.ft).

d. Remove the upper cover according to the steps for adding brake fluid; Remove the brake switch and brake lever by referring to Check the brake accessories in "Repairs".

e. Blockages can be unblocked with a blow gun or a fine needle-like tool. After disassembly, use a soft-bristled brush that does not shed to clean all parts. It is not recommended to use a dust blow gun to dry, as the air compressor with incomplete water vapor separation or poor filtration effect may blow dust, water vapor or other debris into the cleaned main pump housing through the dust blow gun; A vacuum cleaner with a high vacuum level can be used. Piston assemblies and springs can be fitted with a small amount of DOT4 brake fluid and should not be coated with other lubricating materials such as oil, grease or anti-rust oil. **The inside of the main pump cannot be cleaned with diesel or kerosene.**

f. Referring to the requirements of lubricating the moving parts of the handle in the front, apply an appropriate amount of high-vacuum silicone grease to the outer end of the handle bolt and piston assembly. Replace it according to the removal procedure, and follow the previous steps to add the newly opened brake fluid and perform the exhaust operation. Note that the copper pad needs to be replaced with new parts to prevent leakage. After assembly, it is necessary to confirm that the brakes have been restored before driving the vehicle.

Disassemble the rear disc brake main pump

a. Remove the seat cushion, the right decorative cover of the fuel tank, the right cover of the main frame, and the decorative cover of the charging port seat by removing the cover with the disassembly cover. Then use the 8# sleeve to remove the two bolts on the right side of the main frame, remove the pin and spring at the junction of the rear brake main cylinder and the brake pedal spline rocker arm (the position indicated by the arrow in the figure), and take out the rear brake main cylinder.

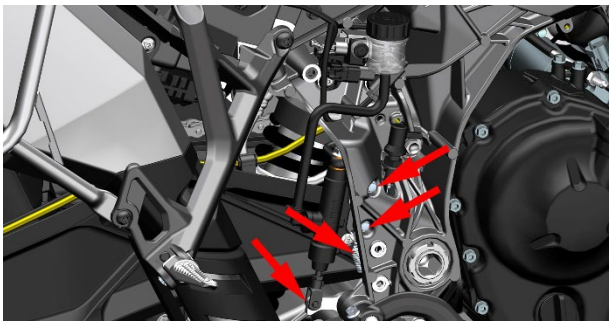

b. Use a T25 torx wrench to remove the two bolts on the rear brake switch bracket, wear waterproof gloves and use a 12# sleeve to remove the disc brake oil pipe bolts, remove the copper pad and remove the RMC-HU oil pipe, and pour out the brake fluid in the main cylinder. Standard torque of disc brake hose bolts: 32 N.m (3.3 kgf.m, 24 lbf.ft).

c. Use a Phillips screwdriver to remove the expansion pegs that hold the rear brake oil cup in place.

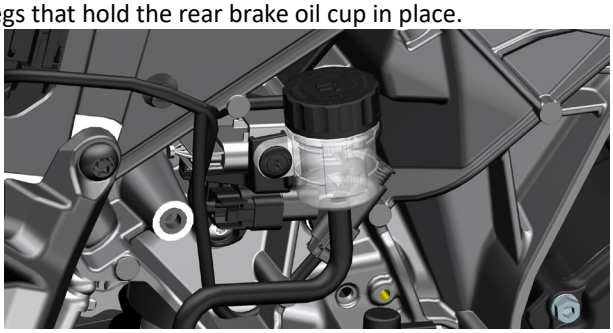

Disassemble the front disc brake caliper

The disassembly method of the front left caliper is similar to that of the front right caliper, and the disassembly of the front right caliper is an example.

First, use 14# to loosen the tubing bolts without leakage. Then remove 2 bolts with 8# hexagon socket, the standard torque of the bolt: 45±5N.m (4.6±0.5 kgf.m, 33±4 lbf.ft). Never operate the brake lever after removing the caliper.

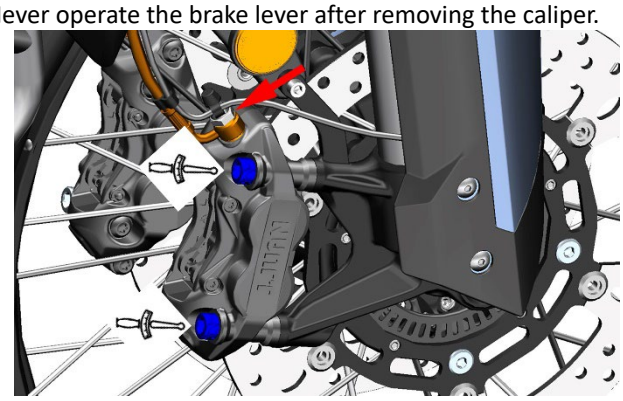

Front disc brake calipers disassembled

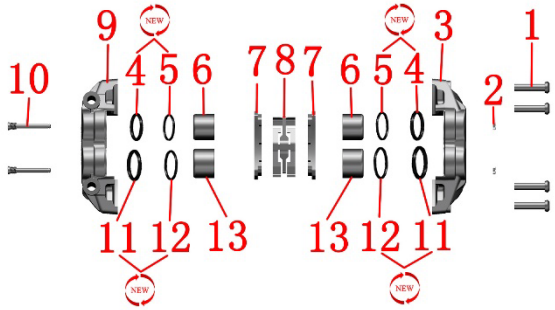

1-bolt 2-Circlip 3-Caliper inner housing 4-ϕ30 Oil seals 5-ϕ30 Dust-sealed 6-ϕ30 piston 7-Brake pads 8-Brake pad spring pads 9-Caliper outer housing 10-Pin shaft 11-ϕ34 Oil seals 12-ϕ34Dust-sealed 13-ϕ34 piston

The piston can be blown out by blowing compressed air from the oil port with a dust blowing gun. Pay attention to placing towels or other soft materials at the piston to prevent damage caused by collision of the piston; In addition, the dust blowing gun needs to be far away from the caliper body, which is easy to cause damage caused by the piston suddenly flying out when the distance is too close. Inspect the piston and caliper cylinders for scratches, damage, pits, etc. Check whether the pin is deformed.

Attenton：

●The two pins indicated by the arrows are coated with silicone grease.

●After the oil seal and dust seal are disassembled, they should be replaced with new parts, the oil seal and piston should be coated with DOT4 brake fluid before assembly, and the outer ring of the dust seal should be coated with silicone grease.

●Thread fastening glue applied to the threads of caliper pins, torque: 22N.m (2.2 kgf.m, 16 lbf.ft).

●Deflate nozzle torque：7～9N.m(0.7～0.9 kgf.m，5～7 lbf.ft).

●The open end of the piston should be facing the caliper mounting plate, not reversed.

●If there is slight rust on the surface of the piston, it can be sanded off with 2000 mesh fine sandpaper.

e. Restore all parts according to the disassembly procedure, and add a new DOT4 brake fluid according to the steps for replacing the front disc brake fluid, and confirm that the brakes are restored before driving the vehicle.

Disassemble the rear disc brake caliper

a. Place the oil tray at the bottom of the caliper, wear waterproof gloves, loosen the bolt with the 12# sleeve, remove the copper pad, and remove the RC-HU oil pipe. Refer to the steps to add the brake fluid of the rear disc brake main cylinder, remove the upper cover of the main cylinder and accelerate the discharge of the brake fluid. Bolt torque: 32N.m (3.3 kgf.m, 24 lbf.ft).

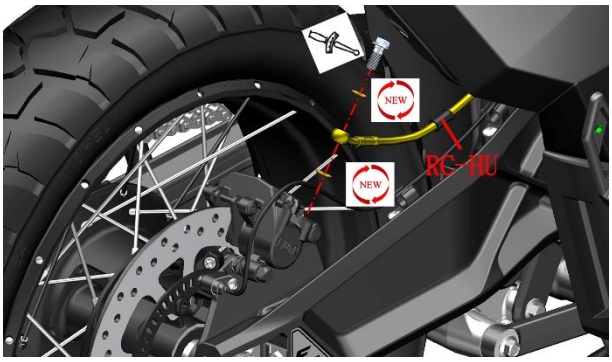

b. Remove the rear caliper and brake pads first by following the steps for removing the rear wheel and replacing the brake plate.

c. Disassemble the rear disc brake caliper

You can refer to the previous steps to disassemble the front disc brake caliper piston and remove the rear disc brake caliper piston. Inspect the piston and caliper cylinders for scratches, damage, pits, etc. Check whether the pin is deformed. The points that should be paid attention to in the assembly are described in detail and will not be repeated here.

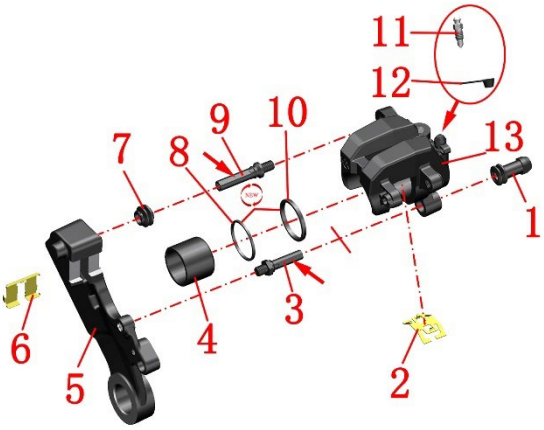

1-Caliper mounting plate pin cap 2-Bouncy cards 3-Lower slide axis 4-piston 5-Caliper mounting plate 6-card 7-Caliper pin cap 8-Dust-sealed 9-Upper sliding axes 10-Oil seals 11-Bleed nozzle 12-Bleed nozzleGlue caps 13-Caliper housing

Attention：

●The pins and bushings indicated by the arrows are coated with silicone grease.

●After the oil seal and dust seal are disassembled, they should be replaced with new parts, the oil seal and piston should be coated with DOT4 brake fluid before assembly, and the outer ring of the dust seal should be coated with silicone grease.

●Thread fastening glue applied to the threads of caliper pins, torque: 27N.m (2.8 kgf.m, 20 lbf.ft).

●Deflate nozzle torque：7～9N.m(0.7～0.9 kgf.m，5～7 lbf.ft).

●The open end of the piston should be facing the caliper mounting plate, not reversed.

●If there is slight rust on the surface of the piston, it can be sanded off with 2000 mesh fine sandpaper.

Brake hose and wheel speed sensor

Wheel speed sensor and inductive ring gear clearance check

Attention：

●The vehicle must be parked on a stable lifting platform or level and flat ground.

Lower the main bracket to park the vehicle securely and let the rear wheels hang in the air.

Use a feeler gauge to check whether the gap between the wheel speed sensor and the ABS sensing ring gear is 0.4-1.2mm (0.02-0.05in).

If the clearance is not within the specified range, it is necessary to check whether the wheel speed sensor is damaged and whether the ABS induction ring gear is loose or deformed. The front wheel needs to check whether the position of the sensor on the front right shock absorber cylinder is deformed, and the rear wheel should check whether the caliper mounting plate is deformed and whether the rear wheel nut is loose.

Front wheel

Rear wheel

Remove the brake hose and wheel speed sensor

Attention：

●The brake hose should be checked regularly according to the maintenance table.

●Before disassembling the brake hose, the brake fluid should be drained before operation.

●Before disassembling the hose, remove the upper caps of the front and rear disc brake main cylinders, and loosen the disc brake hose bolts from the front disc brake caliper and the rear disc brake caliper to drain the brake fluid.

●The discharged brake fluid should be properly disposed of and further use should be prohibited. It is forbidden to pollute the environment by dumping at will; or feel free to place, etc. It should be handed over to a qualified recycling unit for proper disposal.

Release the brake fluid

a. First refer to the previous steps of dismantling, after placing the oil connection plate at the front and rear calipers, remove the disc brake oil pipe bolt and copper pad first, discharge the brake fluid into the oil receiving plate, and then remove the upper cover of the main cylinder with reference to the steps of adding brake fluid to the front and rear disc brake main cylinders, and accelerate the discharge of brake fluid. Remove the disc brake oil pipe bolts and copper pads at the front and rear disc brake main cylinders. Only the steps to remove the brake hose are explained here.

b. Refer to the chapter "Removing the Covers" to remove the cushion and fuel tank, and refer to the chapter "Cooling System - Auxiliary Water Tank" to remove the auxiliary water tank. Press the buckle indicated by the arrow, turn the plug pusher in the direction indicated by the arrow, and remove the plug. In order to prevent the remaining brake fluid from entering the plug when the hose is removed in the next step, the plug of the hydraulic control unit can be wrapped in an oil-resistant film plastic bag.

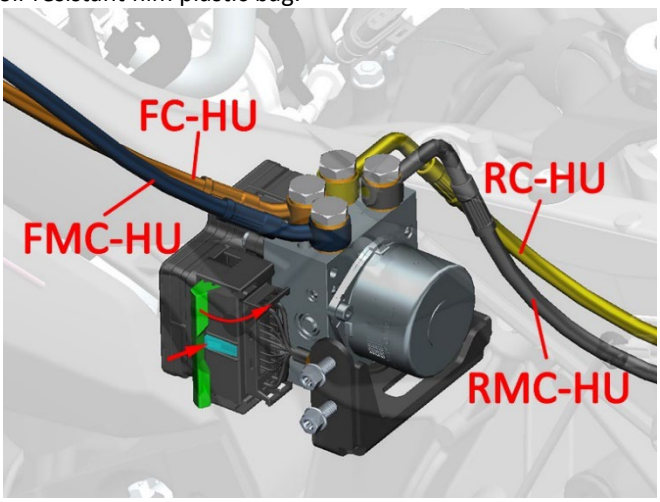

FMC-HU：Front disc brake main pump - hydraulic control unit
FC-HU：Front disc brake caliper-hydraulic control unit
RMC-HU：Rear disc brake main pump - hydraulic control unit
RC-HU：Rear disc brake caliper-hydraulic control unit

An oil-resistant plastic bag or plastic film can be placed around the bottom of the hydraulic control unit and fixed with tape to prevent the residual brake fluid from dripping onto the parts when loosening the tubing nut joint. Use a 12# open-end wrench to loosen the tubing bolts at the hydraulic control unit counterclockwise. The bolt is 21N.m (2.1 kgf.m, 15 lbf.ft). Wipe off any remaining brake fluid with a clean non-woven fabric, taking precautions to prevent dripping onto the cover or cable connectors

FMC-HU and FC-HU. Wheel speed sensor (front wheel)

a. Remove the head and bumper by referring to "Removing the Covering". Remove the lower plate fender with reference to "Fork Assembly".

b. Use the 10# sleeve to remove the bolts of the brake hose clamping the sleeve bracket, take out the FMC-HU hose, and remove the clamping sleeve on the oil pipe.

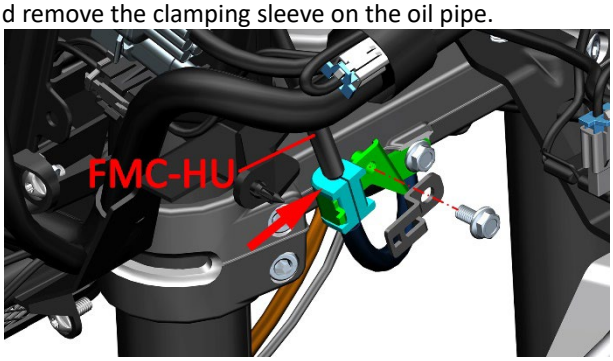

c. Remove the bolts that fix the tubing with a 10# sleeve, and remove the FMC-HU tubing and FC-HU tubing.

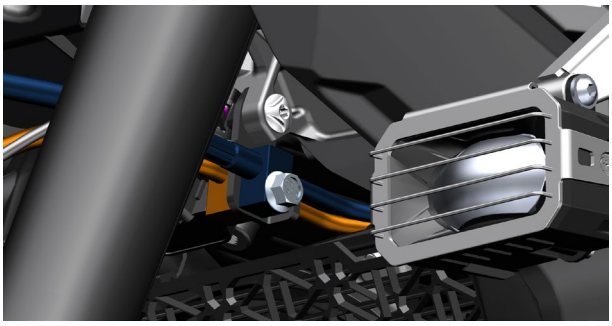

d. Remove the bolts that hold the tubing with 5# hexagon socket and loosen the FC-HU tubing.

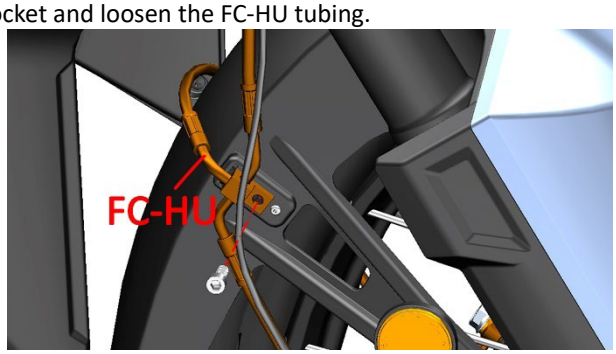

e. Untie the two oil pipes on the inside of the left frame and pull the two oil pipes out of the front.

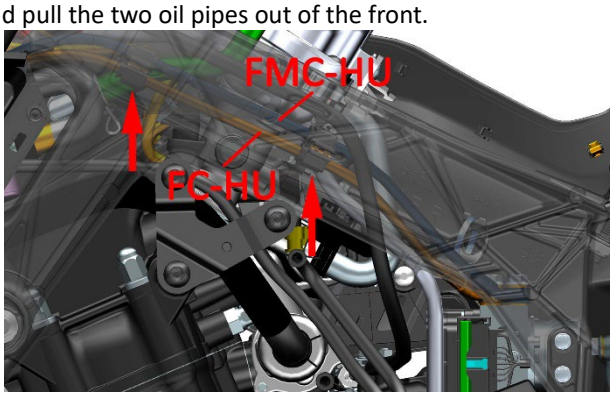

f. Find the plug of the wheel speed sensor on the right side of the vehicle (near the upper right guard), press the anti-disengagement card and pull out the plug.

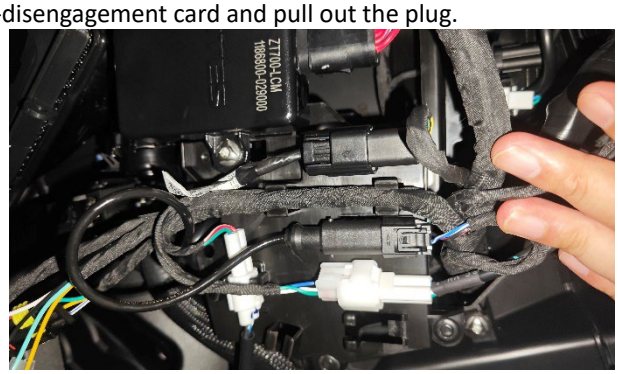

g. For details on how to remove the FC-HU and wheel speed sensor calipers, see the section on removing the front disc brake caliper.

h. Check whether the cable is damaged, if there is wear and tear on the cable sheath, it needs to be wrapped with electrical tape to avoid short circuit and vehicle failure.

i. Check the surface of the removed hose for signs of aging, cracks, breakage, wear and tear. After wiping off the remaining brake fluid with a non-woven fabric, wrap both ends of the hose with plastic wrap or a plastic bag to prevent foreign objects from entering. Check whether the cable sheath of the wheel speed sensor cable is damaged, and if it is worn out, it can be glued with electrical tape to prevent

short circuit.

RC-HU and RMC-HU. Wheel speed sensor (rear wheel)

a. Find and unplug the rear wheel speed sensor on the right side of the main frame next to the rear brake main pump cup.

b. The RMC-HU removal method is detailed in the section on removing the rear disc brake caliper at the front. Directly remove the RMC-HU tubing. Pull the RC-HU tubing and wheel speed sensor out of the three-piece tubing clamp

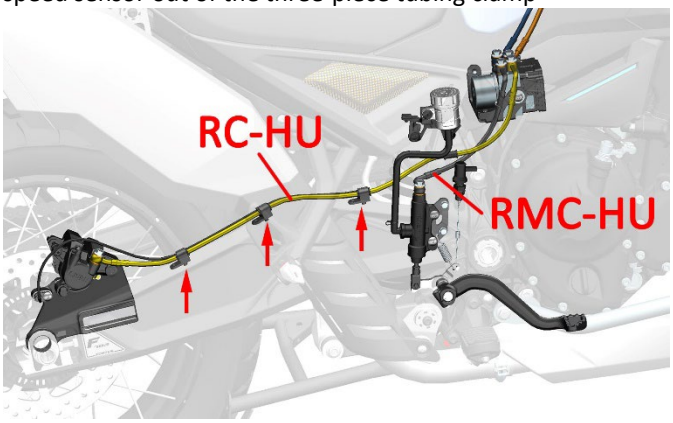

c. The removal method of the RC-HU and wheel speed sensor calipers is detailed in the section on removing the front disc brake calipers above.

d. Check the surface of the removed hose for signs of aging, cracks, breakage, wear and tear. After wiping off the remaining brake fluid with a non-woven fabric, wrap both ends of the hose with plastic wrap or a plastic bag to prevent foreign objects from entering. Check whether the cable sheath of the wheel speed sensor cable is damaged, and if it is worn out, it can be glued with electrical tape to prevent short circuit.

ABS system arrangement

1-Front wheel speed sensor 2-ABS Hydraulic control unit 3-Rear wheel speed sensor 4-OBD Diagnostic interface

ABS hydraulic control unit

Attention：

●Before disassembling the liquid control unit, the positive and negative electrodes of the battery need to be removed to prevent damage to the electrical components caused by misoperation.

●Brake fluid is toxic and need to protect yourself. For specific precautions, please refer to the pre-service instructions.

●When disassembling the brake hose fitting, be careful not to break or bend. The cable connector has an anti-disconnection buckle and cannot be forcibly pulled out. After removing the hose, it is necessary to prevent the access of foreign matter.

●Before reassembling the hose fitting at the hydraulic control unit, apply a small amount of brake fluid to the thread.

●After replacing the hydraulic control unit with a new one, you need to refill the brake fluid and exhaust the air to ensure that the brakes are restored before driving the vehicle.

Disassembly

a. Refer to the chapter "Removing the Cover", remove the seat cushion, fuel tank, and the left cover of the main frame, and remove the auxiliary water tank according to the chapter "Cooling System - Auxiliary Water Tank".

b. Follow the previous steps to drain the brake fluid, remove the 4 hose fittings and unplug the cable connectors.

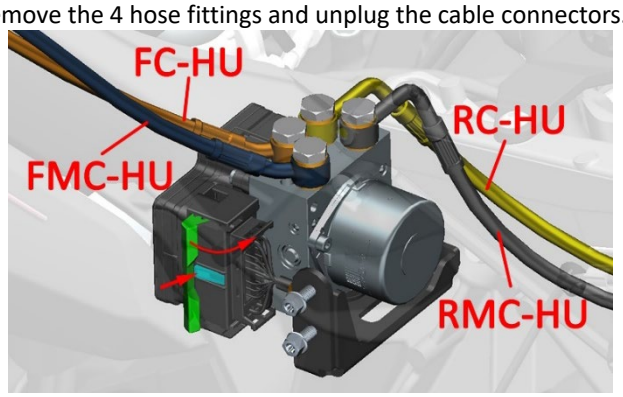

c. Use the 8# sleeve to remove the 2 bolts on the left side of the main frame, and remove the hydraulic control unit and bracket assembly from the motocycle.

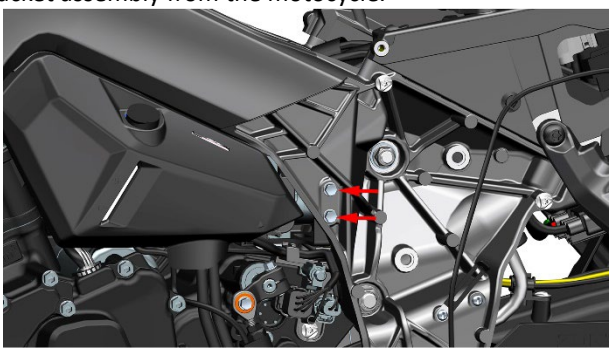

d. After grasping the hydraulic control unit, use a T25 torx wrench to remove the two M6×16 bolts, and the hydraulic control unit can be removed. If you need to replace the bracket, you will need to remove the flanging bushing and cushioning glue.

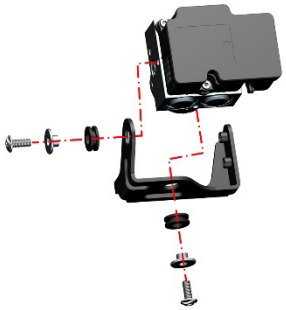

9. Battery/charging system

Pre-Service Notice

1. Waste batteries should be disposed of properly so as not to pollute the environment. It is recommended to hand over the waste battery to a professional recycling agency for recycling.

2. It is forbidden to use a charger that has not been tested to charge the battery.

3. When the battery is reinstalled, the power is suddenly cut off during driving, the idle speed is abnormal, and the insurance is replugged and unplugged, etc., the EFI system needs to be reset. Specific methods as follows：

Turn on the electric door lock switch and the engine flameout switch, pinch the clutch to start the engine in neutral for 60 seconds, turn off the engine flameout switch, and repeat the above operation again after 10 seconds.

4. Before disassembling the battery, the vehicle should be de-energized before proceeding.

5. Before troubleshooting the charging system, you should check whether the battery is in normal use and maintenance. Check with the owner to see if you regularly use high-powered electrical appliances, or if you don't drive your motorcycle for a long time, or if you turn on the lights for a long time without starting the vehicle.

6. If there is a “ " symbol on the right side of the step, you can click to quickly jump to the corresponding step.

WARNING

●When the engine cannot be started, never press the electric start button frequently. Frequent operation can lead to overheating or damage to the starter motor, flooding of the cylinder, battery feeding, etc.

●When the vehicle is powered on, connecting or unplugging may cause damage to some electrical components.

●Overcharging or undercharging, or discharging for a long time can cause damage to the battery.

Troubleshooting

Troubleshooting process for battery damage or attenuation

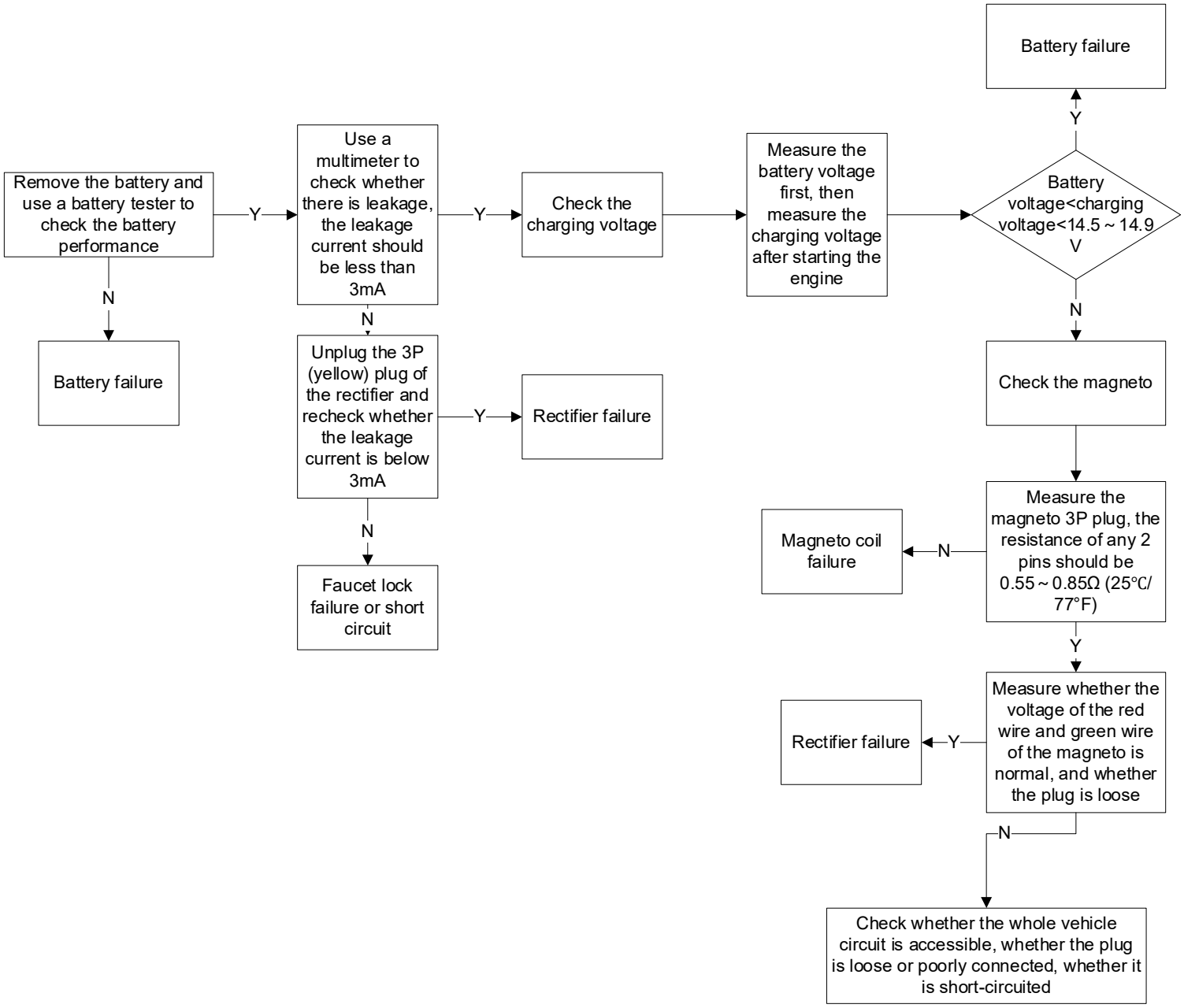

Charging system layout diagram

2024 model

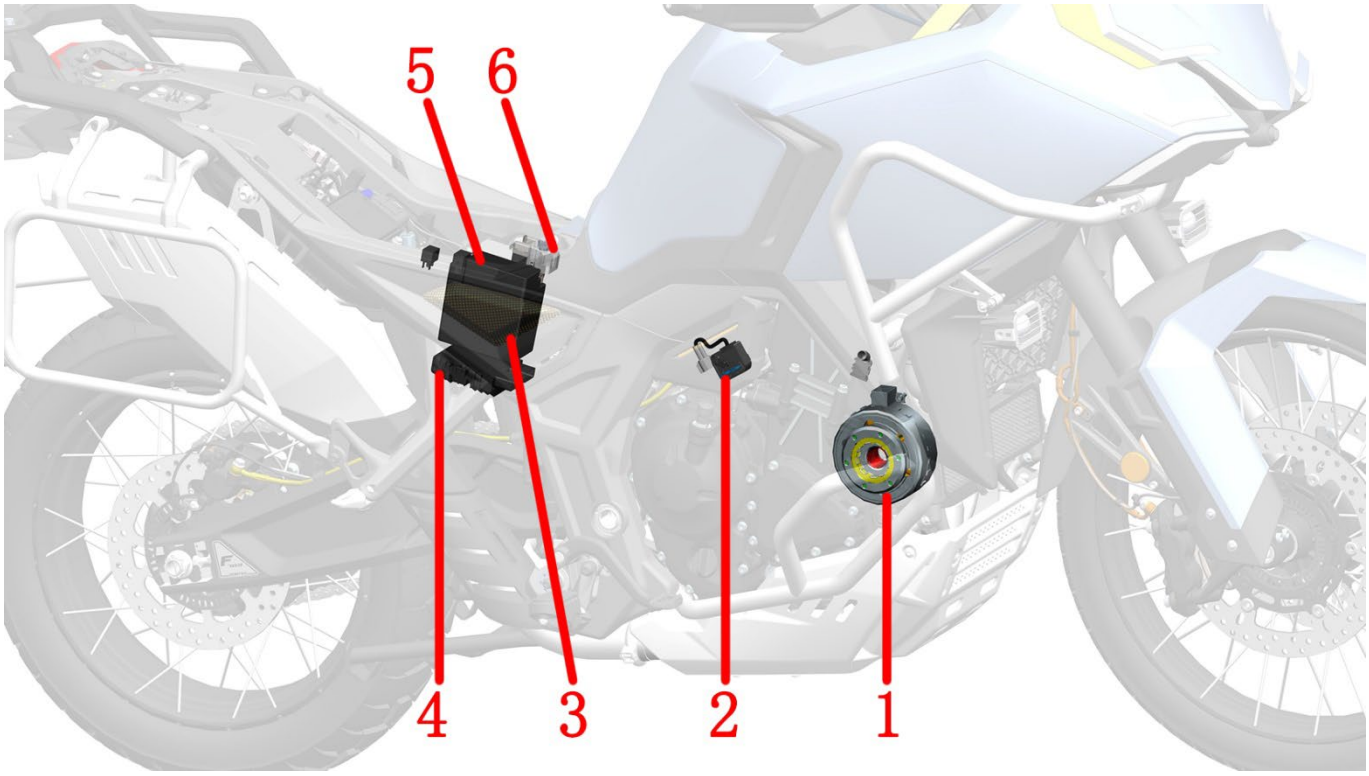

1-Magneto 2-Charging port base 3-accumulator 4-rectifier 5-Fuse box 6-Starting relay（40A）

2026 model

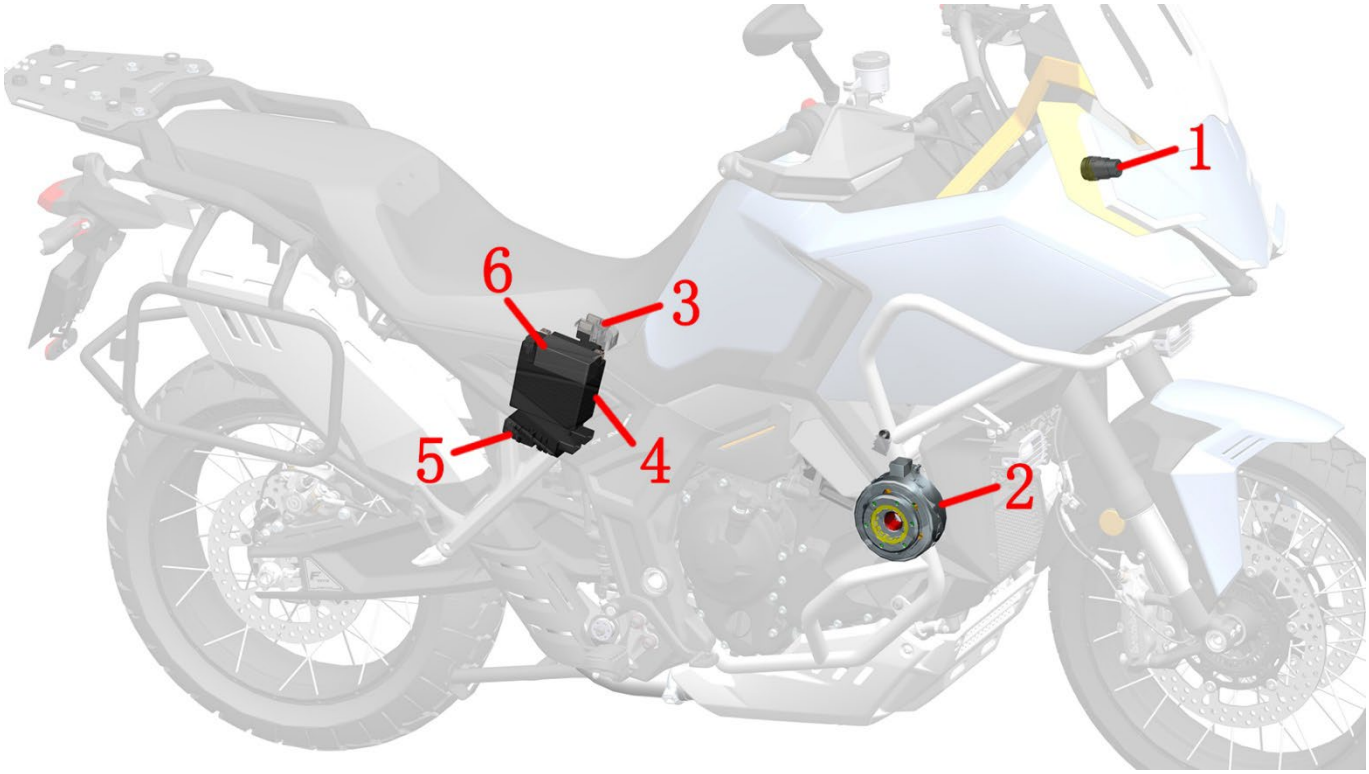

1 - USB Charger (Type-C) 2 - Magneto 3 - Starter Relay (40A) 4 - Battery 5 - Rectifier 6 - Fuse Box

Electrical schematic

2024 model

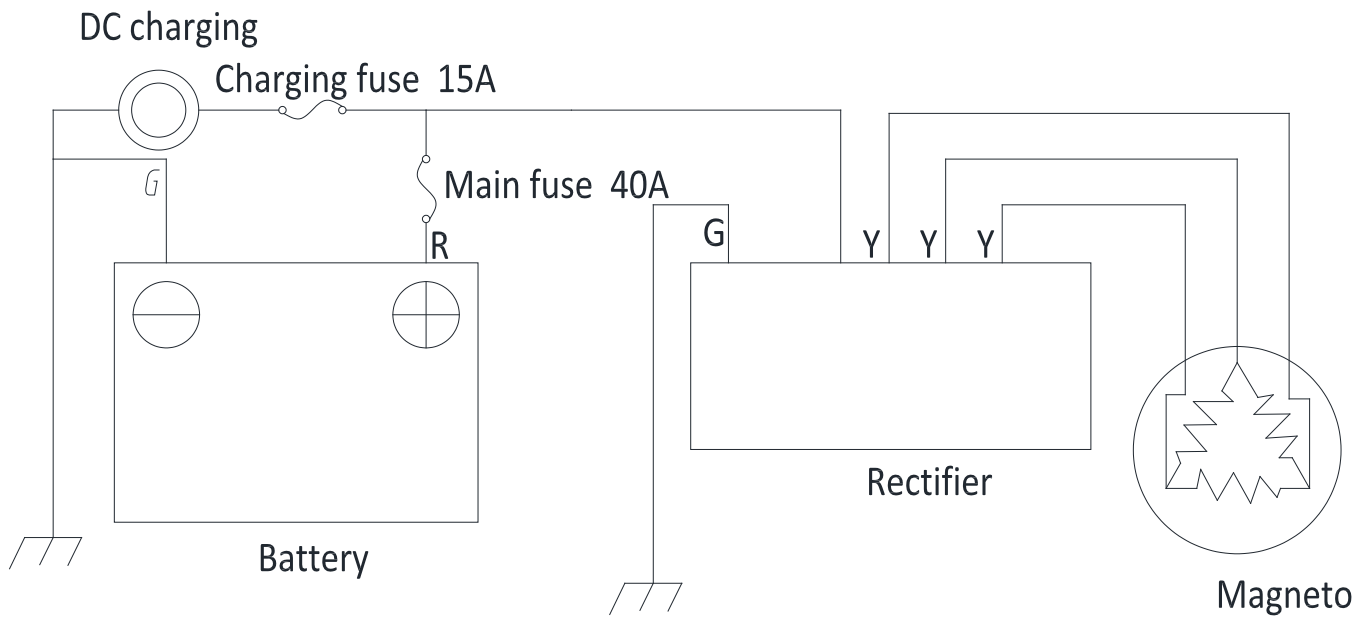

Letter	G	R	Y
English	Green	Red	Yellow

2026 model

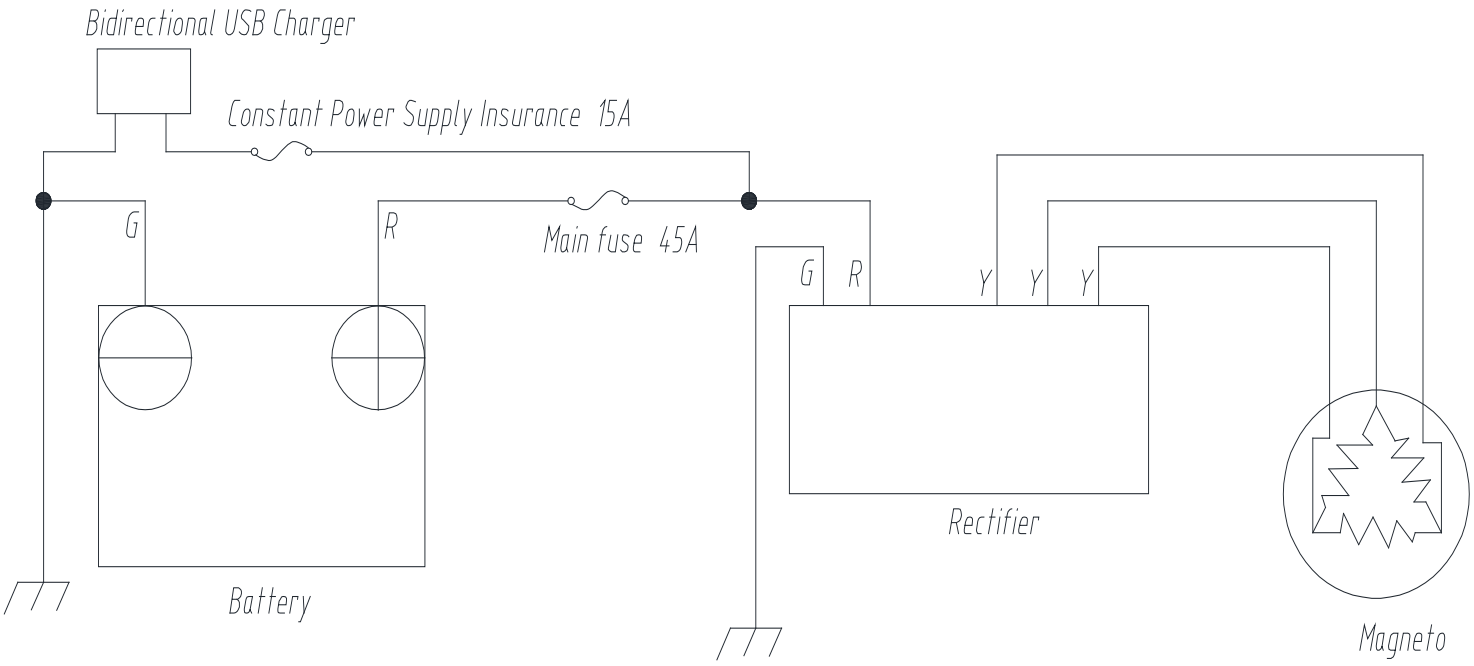

Letter	G	R	Y
English	Green	Red	Yellow

Accumulator disassembly and assembly

1. Disassembly

Attention:

●The whole vehicle must be powered off before dismantling the battery.

●The negative electrode must be removed first, and then the positive electrode. It's the other way around when it comes to installation.

●The positive and negative electrode protective caps must be covered when reinstalled.

●After removing the battery, you need to reset the instrument time and reset the EFI system.

a. Lengthen the battery strap in the direction of the arrow, remove it from the PKE mounting bracket, and remove the strap from the GPS assembly.

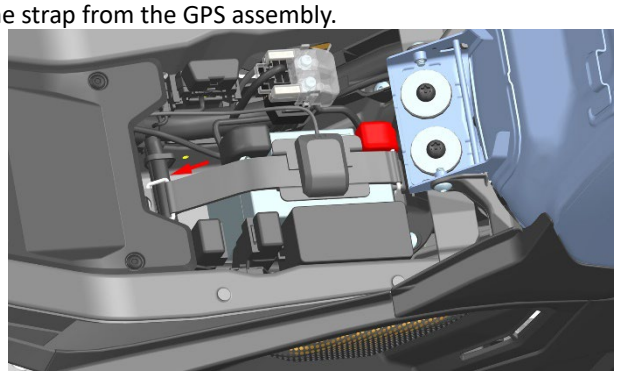

b.Pull out the black protective cap of the negative electrode first, and remove the negative electrode first. Then disassemble the positive electrode. Remove the battery.

2. Check

After opening the cushion, remove the protective caps of the positive and negative poles, and use a multimeter to measure the battery voltage. Note: The whole vehicle should be turned off before measuring the voltage.

voltage	Full charge voltage	13.3V
	Charging voltage is required for unloaded vehicles	≤12.8V
	Charging voltage is required for loading	≤12.5V

Attention:

●Freshly charged batteries need to be left for about 30 minutes before measurement, and the voltage of the freshly charged batteries will fluctuate.

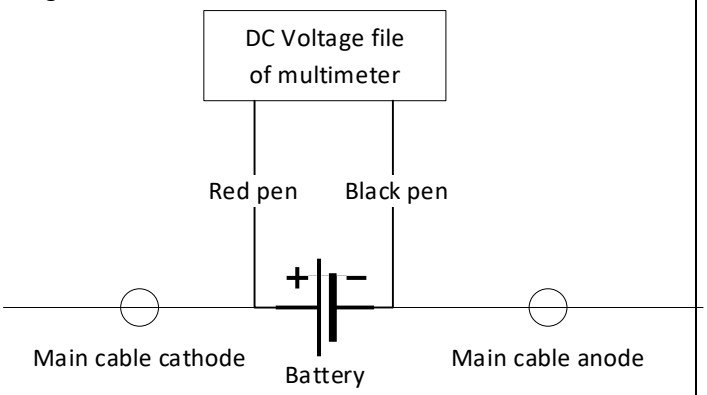

3. Charge

If the battery cannot be started due to insufficient power, it can be charged with the charger provided with the motocycle. Open the charging port holder trim cover assembly to see the DC charging port that comes with the PKE.

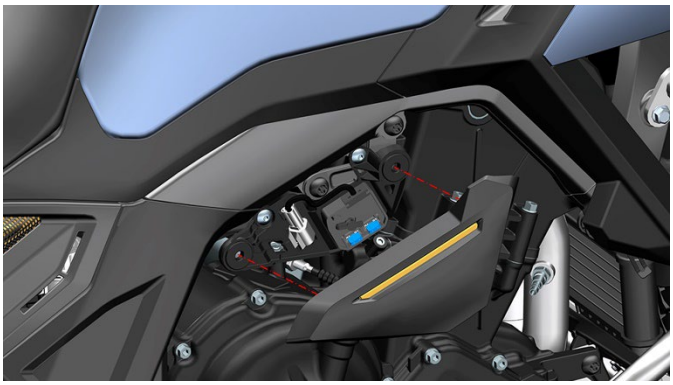

Charging system check

1. Creepage test

a. The vehicle is turned off and the power is off, and the negative wire of the battery is removed.

b. Turn the multimeter to the current setting. The black pen is connected to the negative terminal of the battery, and the red pen is connected to the removed negative wire. Pay attention to adjust the current to a high gear first, and then gradually reduce it to a suitable setting.

c.Measure whether the leakage current is less than 3mA. If the standard value is exceeded, it is necessary to check whether the circuit has a short circuit.

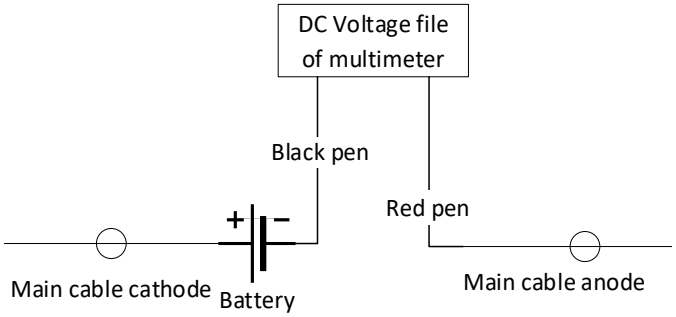

2. Check the charging voltage

Attention:

●Make sure the battery is in good condition before testing.

●The accumulator or any electrical device cannot be disconnected before the whole vehicle is powered off.

a. Preheat the engine to normal operating temperature first, and then turn off the engine.

b. Connect the red pen of the multimeter to the positive pole of the battery, and the black pen to the negative pole directly. Adjust the multimeter to the 20V DC voltage level. Turn on the high beams of the headlights and start the engine. Measure the charging voltage at 5000 rpm of the engine.

Standard:

The battery voltage < charging voltage < 15V

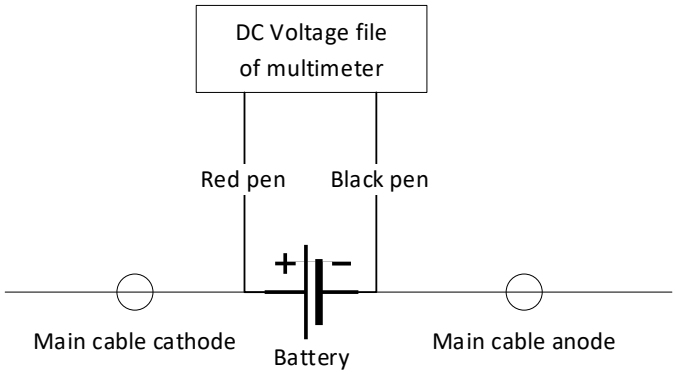

3. Magneto stator charging coil inspection

a. Insert the 8# socket or torx wrench with ratchet through the gap and remove the two bolts that hold the rectifier in place.

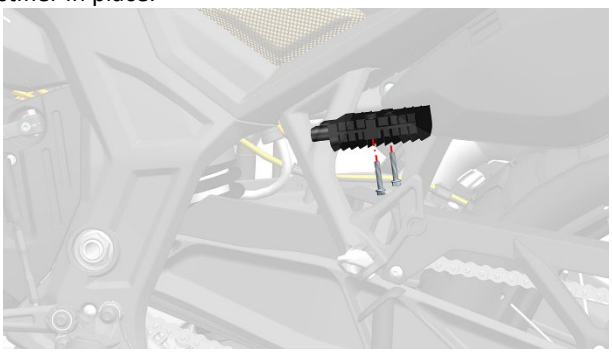

b. Unplug the 3 wires. Check the plug for looseness or corrosion.

c. Use the resistance of the multimeter resistance to measure the resistance of any two wires of the yellow wire color 3P plug on the stator side of the magneto, the standard 0.55～0.85Ω（25℃）.

d. Check whether the yellow wire color 3P plug on the stator side of the magneto is not conductive with the ground. If the resistance value or the conduction with the ground, the magneto stator needs to be replaced.

Rectifier

Dismantle the rectifier

Reach into the 8# socket or torx wrench with ratchet from the gap, remove the two bolts that hold the rectifier in place, and unplug the two plugs of the rectifier.

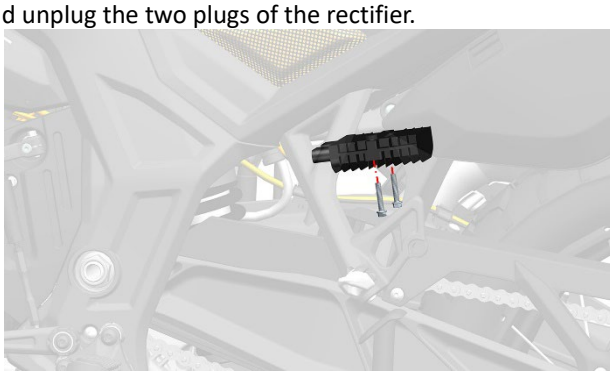

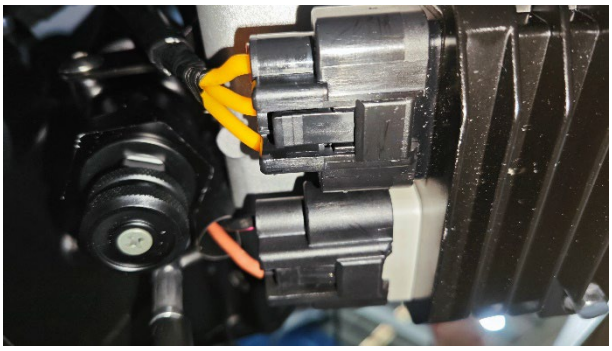

Rectifier detection

Check the plug for looseness or corrosion. Use the DC voltage block of the multimeter to detect the 2P plug on the wiring harness side, and the battery voltage should be able to be measured between the red line and the green line. Otherwise it is abnormal.

10. Front fork assembly

Pre-Service Notice

1. Use high-quality tools or special tools and fixtures designed by our company. Using inferior tools may cause damage to parts, coating shedding, inadequate assembly, etc.
2. O-rings, paper gaskets, copper gaskets, component sealing rings, etc. used for sealing must be replaced before assembly.
3. Fasteners with torque requirements need to use a torque wrench to check the torque; those without torque requirements refer to the general torque values recommended for general fasteners.
4. Clean before assembly; check whether the assembly is correct and in place after assembly.
5. The vehicle should be parked in a balanced position and attention should be paid to safety during disassembly and assembly. This includes but is not limited to the use of electric tools, hand tools, pneumatic tools, hydraulic tools, and handling; avoid contact with skin, eyes, burns, etc.
6. All types of replaced oils, liquids, batteries, etc. must be collected and handed over to qualified institutions for disposal; it is prohibited to dump them at will to pollute the environment or water sources.
7. Swallowing or inhaling coolant, brake fluid, etc. will cause certain harm to the human body. Wash hands, face and any exposed skin thoroughly after each addition. If swallowed by mistake, contact the poison control center or hospital immediately; if inhaled, go to a ventilated environment immediately. If accidentally splashed into the eyes, rinse the eyes immediately with plenty of running water and seek medical attention or treatment in time. Keep away from children and pets.
8. When replacing the front wheel, a jack or similar device is required to support the entire vehicle.
9. Contaminated disc brake discs and disc brake pads will reduce the braking effect. Please replace new disc brake pads and clean contaminated brake discs.
10. When the front wheel is removed, please do not operate the brake handle.
11. After the front wheel is installed, press the brake handle repeatedly until the brakes regain their braking effect.
12. If there is a “ ” symbol on the right side of the step, you can click it to quickly jump to the corresponding step.

It is only possible to list some of the things that need to be paid attention to and the basic requirements for preventing accidental injuries; it is impossible to list all situations in detail. Be sure to stay vigilant during the disassembly and assembly process to prevent accidents.

Exploded view of the front fork assembly:

Exploded view of the handlebar

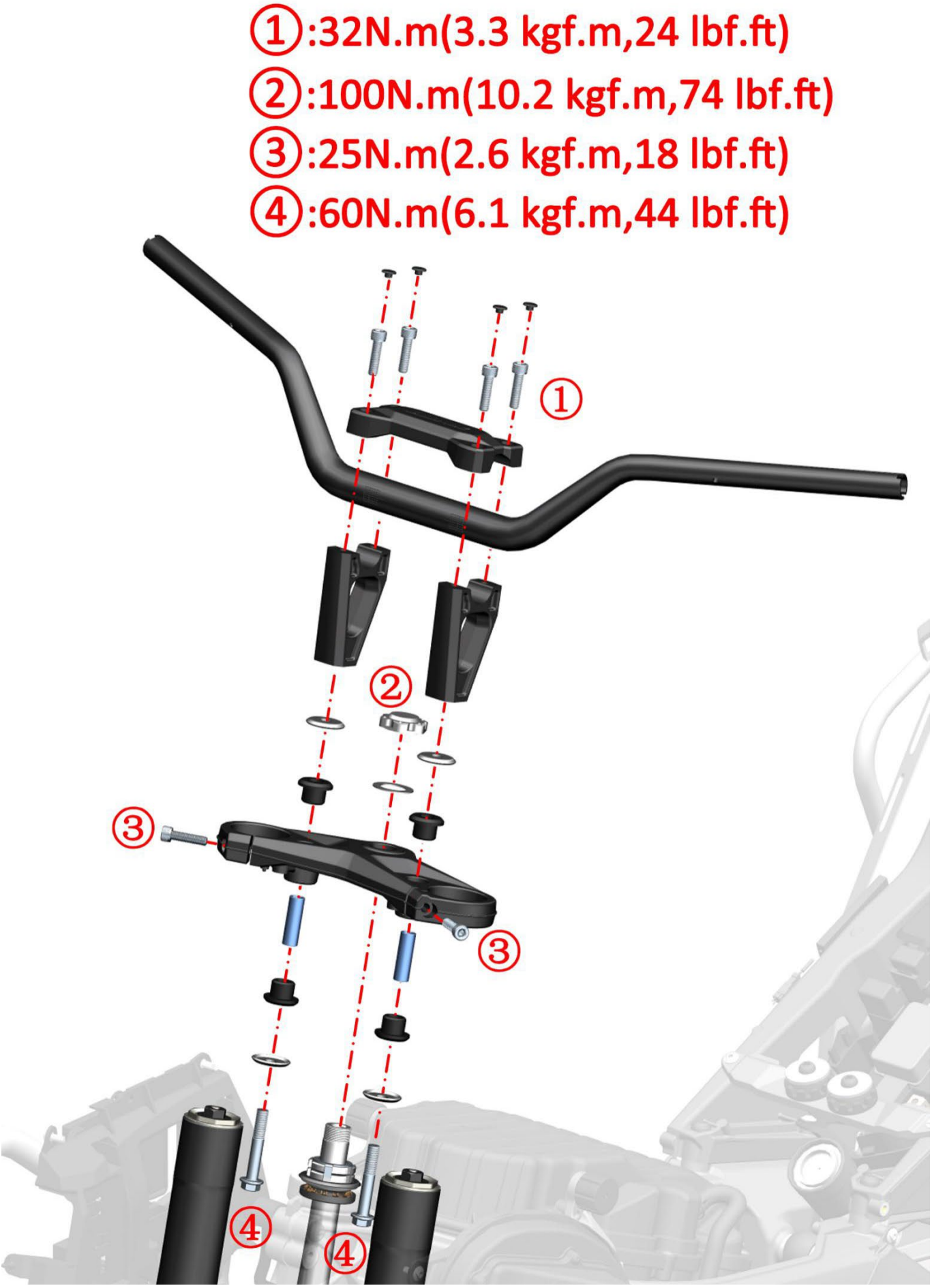

Front fork exploded view

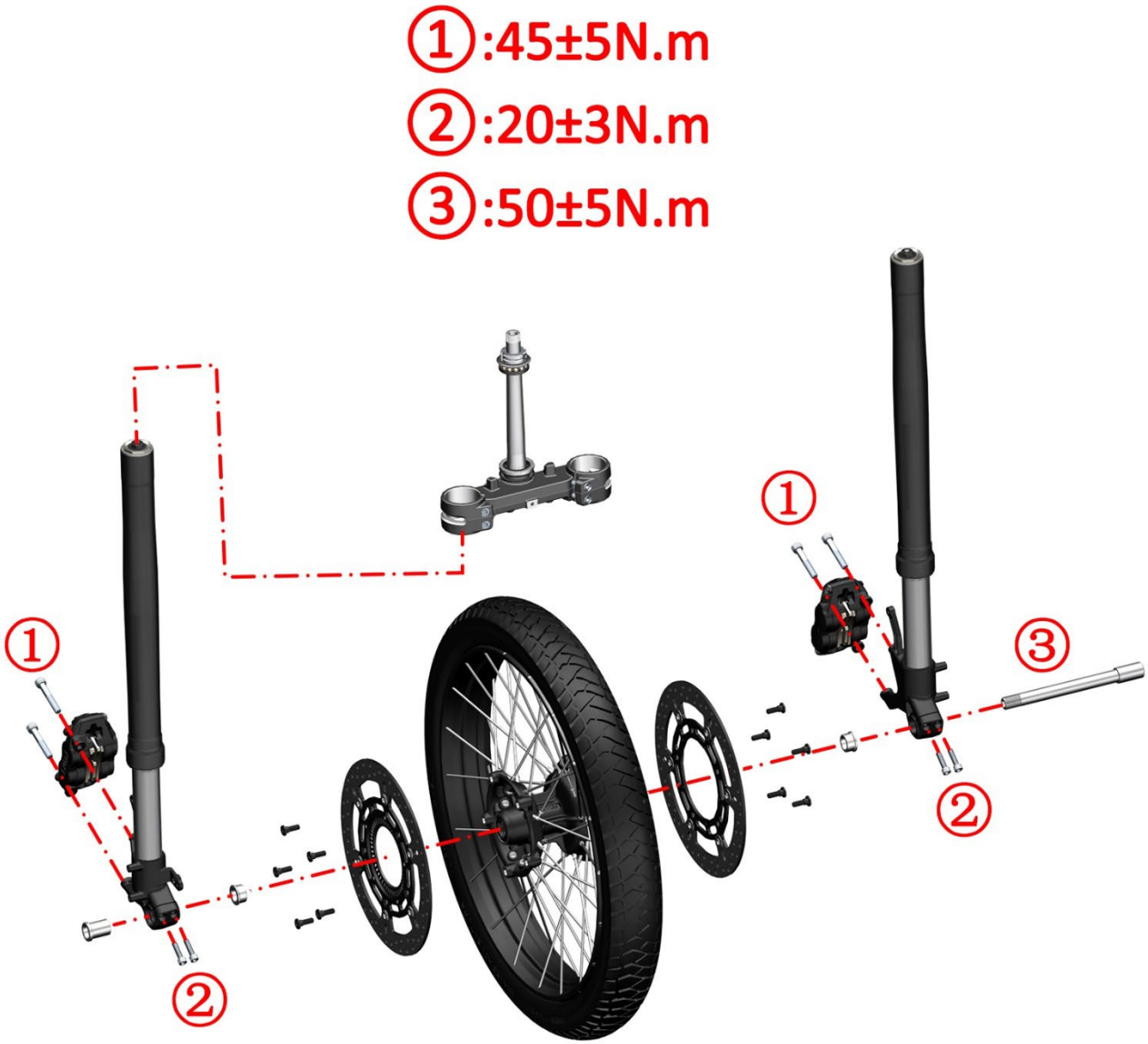

Lower connection board exploded view

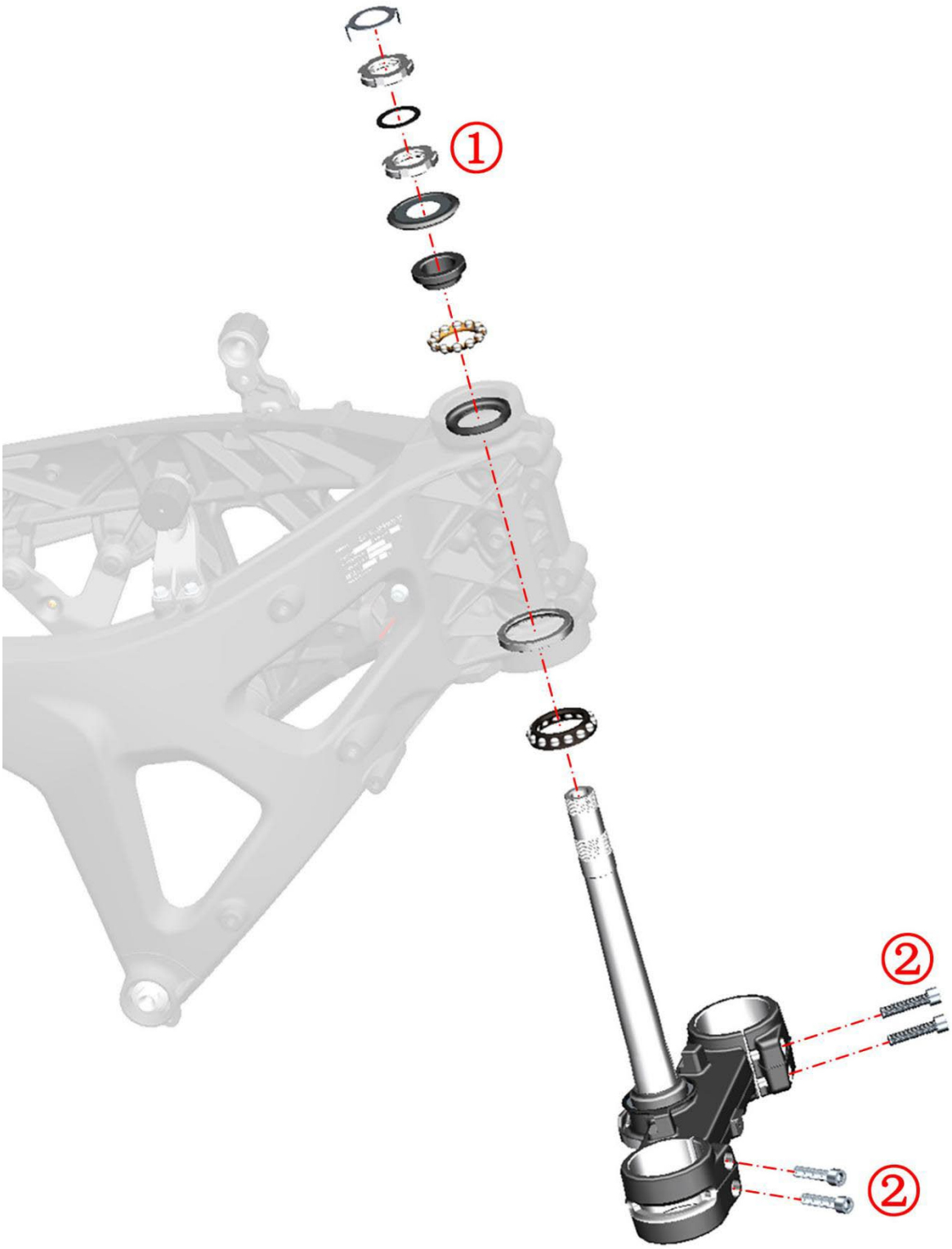

①:13N.m(1.3 kgf.m,10 lbf.ft)
②:25N.m(2.6 kgf.m,18 lbf.ft)

Replace the handlebar

Notice:

●When removing the disc brake oil cup, be sure to point it vertically upwards to prevent air from entering the brake line.

●When disassembling and assembling the handle switch, pay attention to adjusting the internal wiring harness of the switch and the turn signal wiring harness to avoid the housing or bolt column from damaging the wire sheath.

1. Remove the handlebar guard

The removal method of the hand guards on both sides is the same, take the left side as an example. For more detailed installation, please refer to the "ZT703-F Replacement of New Hand Guards and Balance Blocks Video Tutorial" in the corresponding model assembly video of Shengshi Mall.

a. Use a cross screwdriver to remove the self-tapping screws of the wiring box and remove the wiring box. Unplug the turn signal and rearview mirror plugs. Use a T25 plum wrench to remove the bolts in front of the hand guard. Use a 10# socket to remove the nuts and washers under the hand guard. Use a 5# hexagon socket to remove the balance block bolts and remove the hand guard harness fixing tie. Remove the hand guard and balance block assembly.

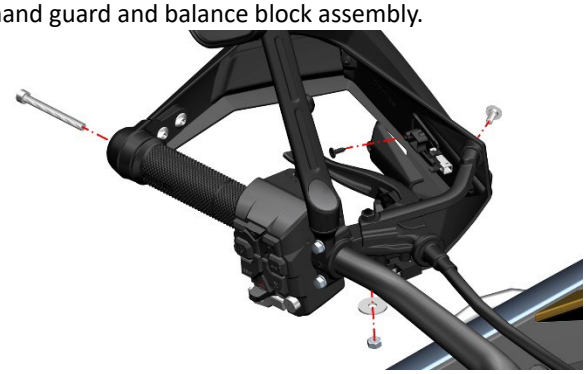

b. Use a cross screwdriver to remove the two self-tapping screws on the handlebar guard and remove the turn signal. Use a T25 plum wrench to remove the two bolts and separate the balance weight and the hand guard.

c. If necessary, use a 10# socket to remove the upper nut and remove the left hand guard bracket. Use a 12# open-end wrench to remove the bottom adapter stud. The standard torque of the nut and adapter stud is 8~10N.m.

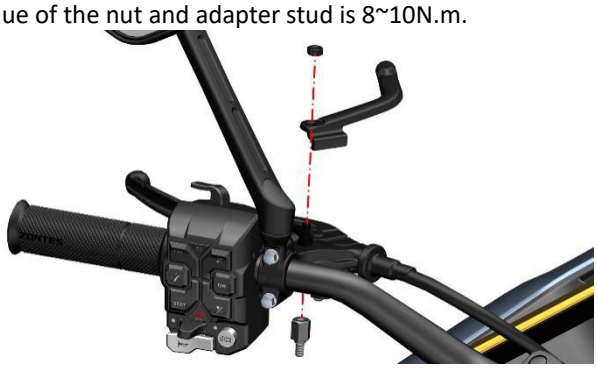

The right hand guard bracket requires 2.5# and 5# hexagon wrenches.

2. Remove the handlebar assembly

a. Use an 8# socket to remove the four bolts, take off the clutch rocker arm half cover, clutch rocker arm, front disc brake half cover, and front disc brake master cylinder. Move the clutch rocker arm and front brake master cylinder aside.

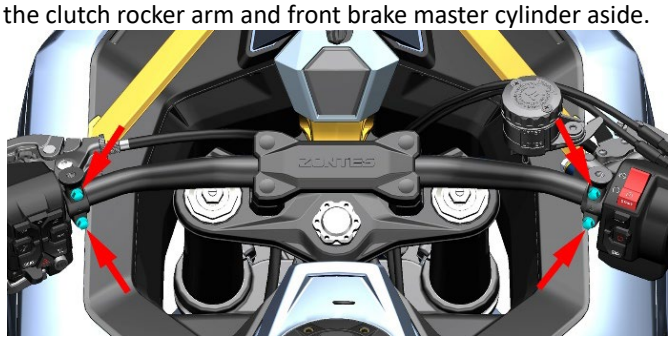

b. Buckle down the 4 decorative buckles on the pressure block, use 6# hexagon socket to remove the 4 bolts, remove the pressure block, and pick up the handlebar.

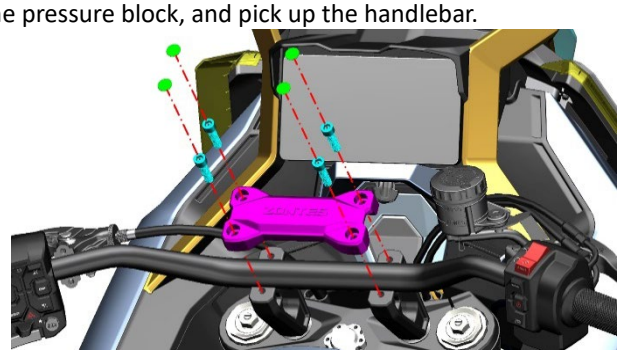

c. Use a Phillips screwdriver to remove the three bolts on the back cover of the right-hand switch, then remove the bolts that secure the throttle cable, and separate the front and rear parts of the right-hand switch.

d. Use a Phillips screwdriver to remove the two bolts on the back cover of the left-hand switch, remove the back of the left-hand switch, and then remove the bolts that secure the front. Remove the front of the switch.

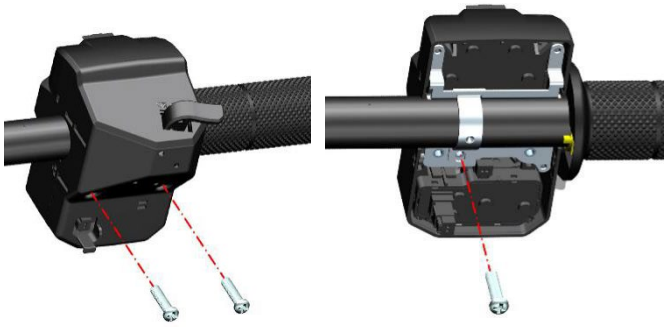

3. Install the handlebar assembly

a. Apply a proper amount of special glue on the inner wall of the left handlebar rubber sleeve to prevent it from loosening. The length of the glue applied should be 1/3 of the handlebar rubber sleeve, and then install the left handlebar

rubber sleeve into the direction handle. Do not apply glue on the inner wall of the right handlebar rubber sleeve, just install it directly.

b. When installing the left and right handle switches, align the limit iron sheet with the positioning hole on the direction handle. Adjust the angle on the left handle rubber sleeve to align the limit block on the contact surface with the circular groove on the front of the left handle switch, then fix the limit iron sheet with bolts, and tighten the remaining bolts of the left and right handle switches in sequence with a cross screwdriver.

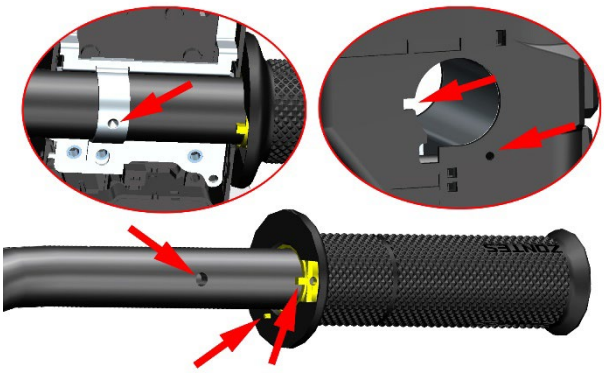

c. When installing the front disc brake half cover or clutch rocker arm half cover, align the joint surface of the half cover and the disc brake master cylinder or the half cover and the clutch rocker arm with the round hole on the handlebar, and then use an 8# sleeve to tighten the bolts. Note that you need to tighten the top bolts first, then tighten the bottom.

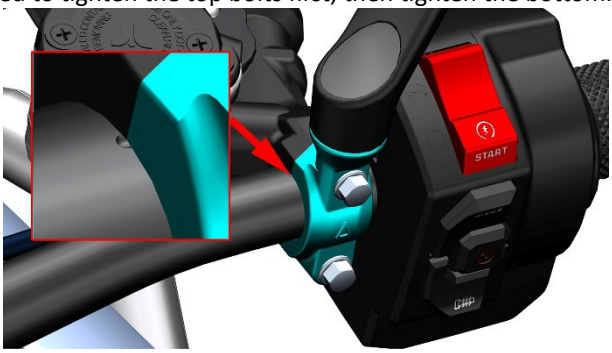

d. Align the long scale on the direction handle with the upper surface of the cushion block and reinstall the pressure block.

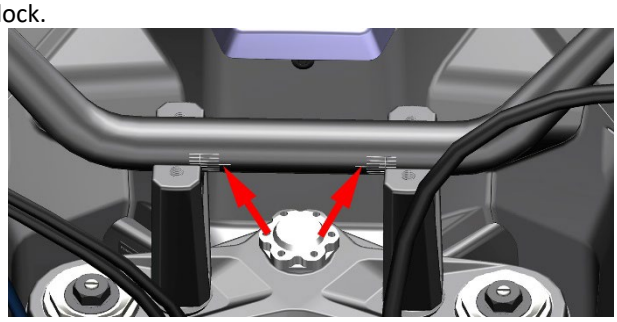

WARNING

●After installation, you should check whether the throttle cable is assembled in place and whether the return is flexible.
●After the installation is completed, check the buttons of the left and right handle switches, check whether they can be used normally, and check whether there is a pressure line.

Replace front wheel

Attention:

●Be careful not to damage the ABS ring gear when disassembling.
●After the front wheel is removed, do not press the brake handle.
●The vehicle must be parked on a level, stable ground or lifting platform.
●It is forbidden to use a high-pressure water gun to flush the oil seal at close range.

1. Remove the front wheel assembly

a. Lay the main bracket, and then use a jack or a suitable device to support the whole vehicle to lift the front wheels off the ground.

b. Use the 6# hexagon to loosen the 2 bolts at the front left shock absorber, and then use the 17# hexagon to remove the front axle, and remove the front wheel and 2 bushings.

2. Install the front wheel assembly

a. Use a flathead screwdriver to separate the brake pads in the brake caliper, if the resistance is too high to cause the brake pads to be separated, you can refer to the method of "adding brake fluid" to remove the upper cover of the disc brake oil cup and then separate the 2 brake pads.

b. Put the front wheel into the middle of the front shock absorber, shake the front wheel left and right, make the disc brake disc stuck in the middle of the brake pad, align the axle hole, insert the front wheel axle, tighten the front wheel axle with 17# hexagon socket, torque: 50±5N.m (5.1±0.5 kgf.m, 37±4 lbf.ft), after the front wheel axle is tightened, there is a gap of about 2mm between the left bushing of the front wheel and the shock absorption; Tighten the 2 M8×30 bolts at the front left shock absorber with 6# hexagon socket, torque: 20±3N.m.

DANGER

●After the front wheel is installed, press the brake handle repeatedly until the brake restores the braking effect.

●Soiled disc and pads can reduce braking effectiveness, so replace them with new ones and clean the soiled discs.

WARNING

●After each replacement of the front wheel, it is necessary to go to a professional institution for dynamic balance testing.

●It should not be used because self-replenishing tire fluid may clog the air holes of the tire pressure monitoring sensor, making it difficult to inflate or tire pressure monitoring failing.

Exploded view of the front wheel assembly:

No.	Name	QTY	Remarks
1	Non-standard plum groove shoulder bolts M8×25 - ϕ10×6	10	25 N.m(2.5 kgf.m， 18 lbf.ft)
2	Front left brake disc assembly	1	
3	Oil seals TC ϕ28×ϕ42×7	2	The front rim comes with it
4	GB276 Deep groove ball bearings 6004 - 2RS - C3	2	The front rim comes with it
5	Tire pressure sensor	1	Pay attention to the orientation when installing; The elbow is facing left
6	Spacer	1	The front rim comes with it
7	Front right brake disc assembly	1	

Inspection and maintenance of front wheel components

Attention：

●This inspection should be handed over to a qualified maintenance unit to complete.

●Do not press the brake handle after the front wheel is disassembled

●Be careful not to damage the ABS coil when disassembling.

●The vehicle must be parked on a level, stable ground or lifting platform

●It is forbidden to use a high-pressure water gun to flush the oil seal at close range.

1. Disc brake discs

1.1 The service life of the disc brake disc

Under normal circumstances, the replacement mileage of the brake disc is about 40,000 kilometers, and the replacement mileage is not absolute, and it needs to be determined according to the owner's travel habits (whether he likes to brake sharply), road conditions, maintenance cycles and other factors, but if he reaches any of the following three situations, he must be replaced.

a. Use vernier calipers to measure the thickness of the disc brake disc less than 4.0mm.

b. Suspend the front wheel in the air and observe whether the disc brake disc swings when the front wheel rotates from the front, so as to detect whether the disc brake disc is deformed.

c. Touch the surface of the disc brake disc with your hand to detect any visible pits, and visually inspect for deep scratches or grooves.

1.2 How to replace the disc brake disc

a. Refer to "Replacing the Front Wheel" to remove the front wheel assembly.

b. Use a T45 torx wrench to remove the 5 pieces M8×25 bolts and remove the disc brake disc.

c. After replacing with the new disc brake disc, use a T45 torx wrench to tighten the 5 pieces M8×25 bolts. Torque: 25N.m (2.5 kgf.m, 18 lbf.ft).

d. Replace the front wheel assembly.

2. Front wheel oil seals and bearings

2.1 The service life of the front wheel oil seals and bearings

Under normal circumstances, the bearings and oil seals in the front axle need to be checked for 50,000 kilometers, but the bearings and oil seals in the front axle need to be checked according to the actual conditions of the vehicle's driving road conditions and the size of the load, for example, after the vehicle wades, the water will enter the oil seal and the bearing, and the fine dust in the water will accelerate the wear between the bearing and the oil seal, and at the same time, the water and grease will become emulsion after mixing and rubbing, and lose the original lubrication effect. This also shortens the service life between the oil seal and the bearing. When the following situation occurs, the front wheel oil seal and bearing should be checked in advance

a. There is an abnormal sound of the front wheel when riding.

b. When the steering knob shakes from side to side while riding.

2.2 How to replace the oil seals and bearings of the front wheels

a. Refer to "Replacing the Front Wheel" to remove the front wheel assembly.

b. Use a flathead screwdriver to warp out the oil seals on the left and right sides of the front wheel, check whether the oil seal is damaged and deformed, check whether the outer ring of the bearing fits tightly with the rim, if there is no abnormality, then rotate the inner ring of the bearing by hand, check whether the rotation of the bearing is smooth, if there is jamming or abnormal noise, the front wheel bearing and oil seal need to be replaced.

c. The replacement of the front wheel oil seal and bearing needs to be completed by a professional maintenance unit.

d. If there is no problem, apply an appropriate amount of butter to the front wheel bearing, and then use a copper rod and rubber hammer of the appropriate size to press the oil seal to its original position.

e. Replace the front wheel assembly.

3. Front rims and tires

3.1 The service life of the front rim and tires

In general, there is no limit to the age and kilometers of the rim, but the rim must be replaced in the following cases.

a. The rim is deformed or warped.

b. Cracks or breaks in the rim

Under normal circumstances, the tires of the front wheels can be used for about 20,000 kilometers, and the normal situation means that the road conditions are not bad and there are no punctures. Because the tires are in rubber products, there will be aging, and the tires will be replaced in about 4 years. If you don't change it, you need to check it frequently to see if the tire is aging, whether the tire has cracks, etc. Tires must be replaced if:

a. The tires have been repaired several times.

b. When the tire tread wear reaches the limit position of the design.

c.There are many aging and cracking phenomena in tires.

3.2 How to replace the front rim and tires

a. Refer to "Replacing the Front Wheel" to remove the front wheel assembly.

b. The removed front wheel assembly is removed using a tire scraper to remove the tire.

c. Use a picker to assemble new rims or new tires. And press the front tire to the standard value. Front tire pressure: 250kPa (36 PSI).

d. After the dynamic balance is done, the assembled front wheel assembly is installed back on the vehicle.

3.3 Dynamic balance

The wheel is a whole composed of tires and rims, due to manufacturing reasons, the mass distribution of each part of the wheel may not be very uniform, when the wheel rotates at high speed, it will form a dynamic unbalanced state, resulting in the phenomenon of wheel shaking and direction shaking in the vehicle while driving, in order to avoid this phenomenon or eliminate this phenomenon that has occurred, it is necessary to make the wheel correct the balance of each edge part by increasing the counterweight in the dynamic situation, and this correction process is what we call dynamic balance.

The dynamic balance of the wheels can ensure that the wheels rotate more smoothly, reduce vibration and shaking,

improve the stability and comfort of the vehicle, and facilitate safe driving.

a. After each replacement of the front and rear wheels, please go to a professionally qualified institution to test the dynamic balance.

b. The moving balance weight must be affixed to the plane specified by the rim.

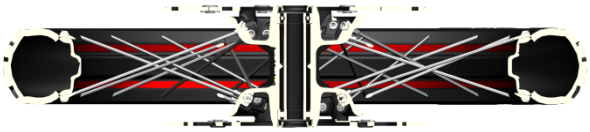

Replace the front shock absorber

Attention:

●After the front wheel is removed, do not press the brake handle.

●Be careful not to damage the ABS coil when disassembling.

●When disassembling the front mud plate, be careful not to scratch the shock absorber or the front mud board.

●When disassembling the shock absorber, you should first remove the 2 bolts that fix the same shock absorber, remove one side of the shock absorber, and then remove the other side.

●When adjusting the front shock absorber, do not turn the adjustment knob beyond its limit, and the preload of the left and right shock absorbers should be adjusted to the same position

1. Remove the front fender assembly and lower fender assembly

a. Refer to "Replacing the Front Wheel" to remove the front wheel.

b. Use the 5# hexagon socket to remove the bolt of 1 piece and remove the pipe clamp. Then use the 8# hexagon socket to remove the 4 bolts that fix the caliper, and remove the front left and right brake calipers.

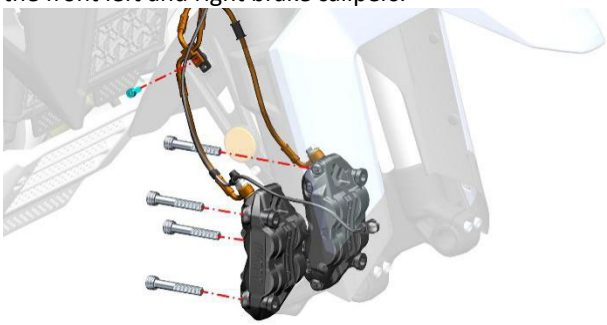

c. Use a T25 torx wrench to remove the 4 bolts on the left and right sides of the front fender (1); Then use the 5# hexagon to remove the 2 bolts (2) on both sides. Detach the tubing from the retaining clip in the rear left side of the fender.

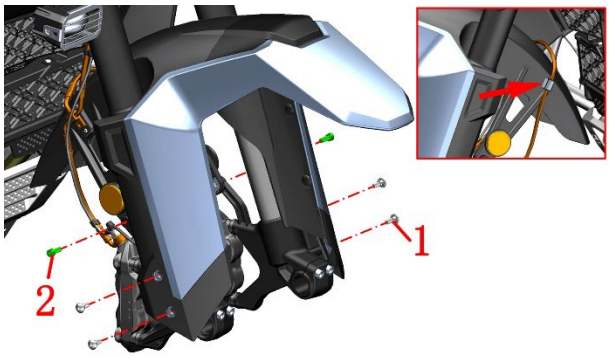

d. After moving the front mud board up to the appropriate part, pull it out in the direction of the big arrow. Remove the bolt on the wheel speed sensor with a T25 Torx wrench and remove the sensor. Remove the front right brake caliper.

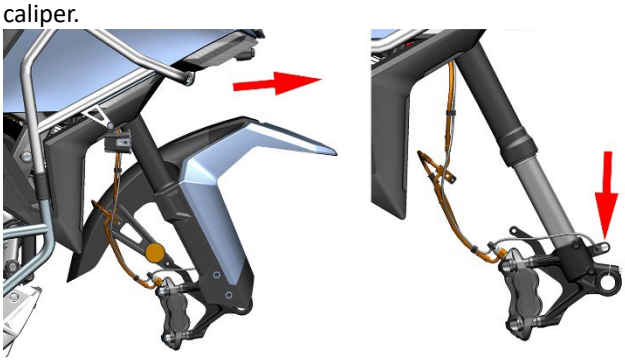

e. Use a T25 torx wrench to remove the two bolts under the lower fender, and remove the fender, flanging bushing, and flanging bushing buffer glue of the lower link.

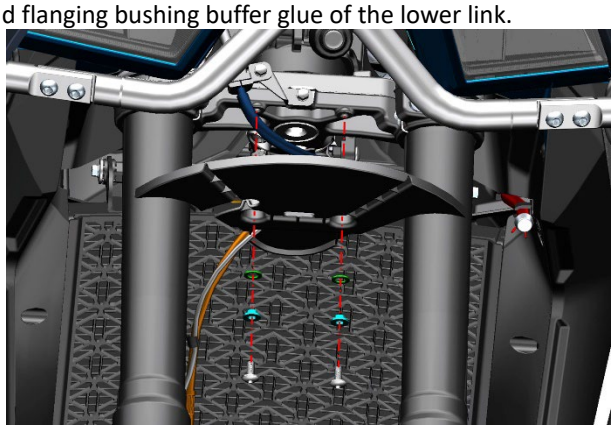

2. Remove the left and right front shock absorbers

a. Hit the direction handle to the position as shown in the figure, and loosen the bolt with 6# hexagon for 5-8 turns. The other side is also loosened in the same way. Use a flathead screwdriver to pry open the gaps in the upper plate (as shown by the arrows).

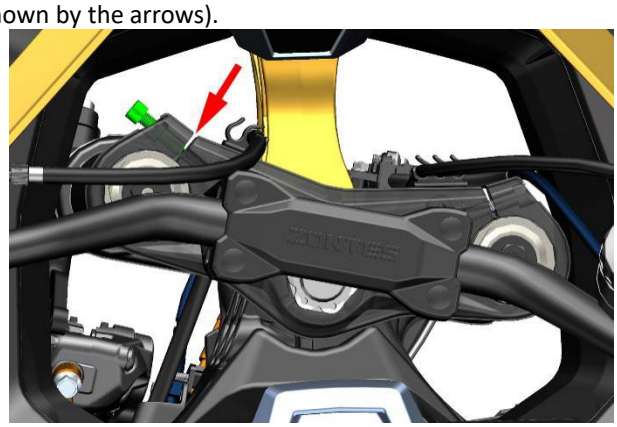

b. Use the 6# hexagon socket to loosen the bolts of 4 M8×35 for 5-8 turns, pry open the gap on the lower plate with a flathead screwdriver (as shown in the arrow), and remove the left front shock absorber and right front shock absorber.

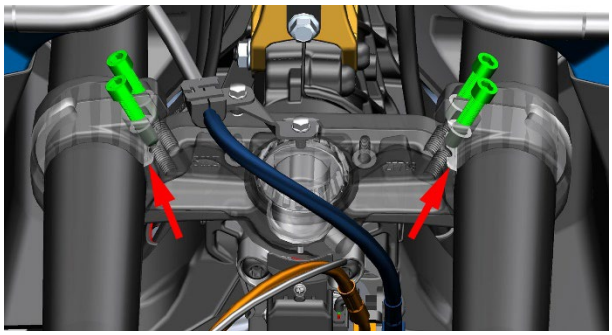

3. Replace components such as shock absorbers, front fenders, and front wheels

a. Use a flathead screwdriver to pry open a gap in the lower plate and insert the corresponding shock absorber.

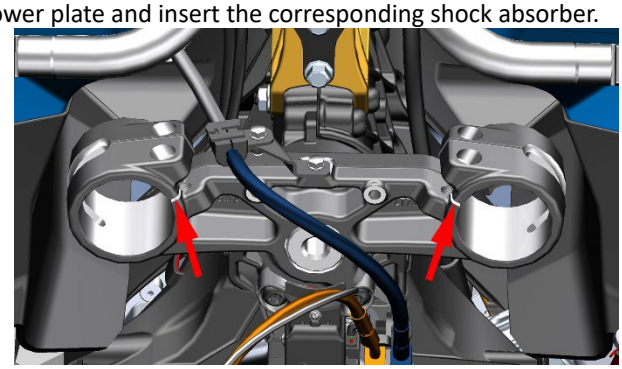

b. Use a flathead screwdriver to pry open a gap in the upper plate, insert the corresponding shock absorber, and adjust the shock absorption to just expose the end cap (as shown in the figure). Remove the flathead screwdriver after installing the shock absorber in place. Use 6# hexagon to tighten the bolt at the upper plate, torque standard: 25N.m.

c. Attach the bolts of 2 M8×35 bolts on the lower plate and use the same method to insert the other shock absorber.

d. After picking up the front wheel and installing the bushing, align the mounting hole between the two shock absorbers, penetrate the front wheel axle, and use 17# hexagon socket to tighten the front wheel axle, torque: 50±5N.m (5.1±0.5 kgf.m, 37±4 lbf.ft). If one of the shock absorbers is not installed in place, the front axle will not be tightened or the right shock will not be able to penetrate, and the shock absorbers that are not installed in place will need to be removed and installed again.

e. After the front wheel is installed, use the 6# hexagon to tighten the bolts of 2 M8×30 bolts in the lower part of the left front shock absorber, torque: 20±3N.m (2±0.3 kgf.m, 15±2 lbf.ft).

f. Use a flathead screwdriver to separate the brake pads inside the brake caliper, if the resistance is too large and the brake pads cannot be separated, you can refer to the method of "adding brake fluid" to remove the upper cover of the disc brake cup, and then separate the brake pads, and align the gap between the two brake pads in the disc brake caliper to the brake disc on the front wheel and install it. Then use 8# hexagon socket to tighten 2 bolts, torque: 45±5N.m (4.6±0.5 kgf.m, 33±4 lbf.ft). Attach the disc brake calipers on both sides.

g. After the front fender is replaced, use a T25 Torx wrench to replace the 4 M6×14 shoulder bolts. Then use the 5# hexagon socket to replace the bolts of 2 M6×16, and finally install the oil pipe back into the left rear side fixing clip.

4. Adjust the front shock absorber

For specific steps, please refer to the user manual or the "ZT703-F Front and Rear Shock Absorption Adjustment Video Tutorial" in the corresponding model of ZONTES Mall. It will not be repeated here.

Replace the upper and lower link boards

Attention:

●After the front wheel is removed, do not press the brake handle.

●The disc brake cup must be removed vertically upwards to prevent air from entering the brake line.

●After disassembly, make sure that all parts are properly replaced.

●Bearings should be installed with an appropriate amount of grease.

4.1. Disassemble parts in advance

Refer to "Replace the Front Wheel", "Replace the Front Shock Absorber", and "Change the Direction Handle", and remove the front wheel, front shock absorber, and direction handle.

4.2. Remove the faucet lock

Find the faucet lock at the bottom of the lower link, use the T45 plum blossom perforated sleeve to remove the two M8 bolts that hold the faucet lock, and remove the spacer and faucet lock.

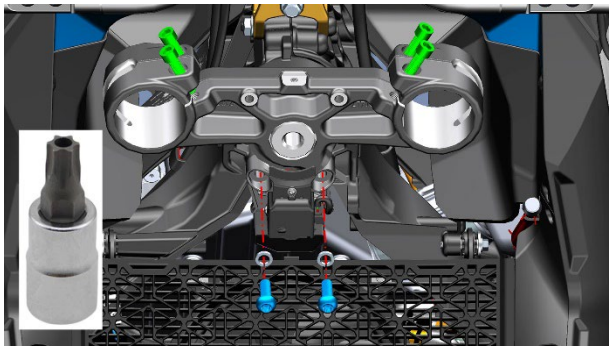

4.3. Remove the upper plate and the direction handlebar pad

a. Use the 38# sleeve or our customized hexagonal sleeve to remove the upper plate nut, remove the gasket and the upper plate assembly. (Note that when using a 38# socket or open-end wrench, wrap a cloth on the surface of the nut to prevent twisting the bolt.）

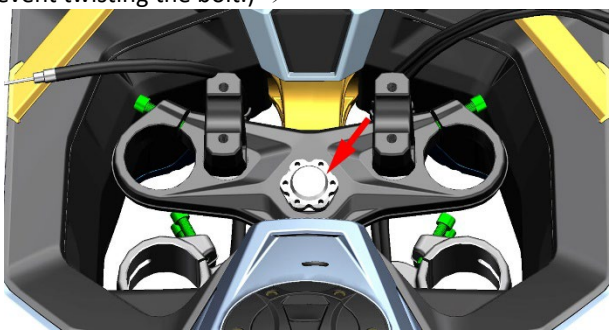

b. Remove the two bolts (1) of the upper plate with 6#

hexagon socket, and the torque of the bolt (1) is 25N.m (2.6 kgf.m, 18 lbf.ft). Use the 14# sleeve to remove the two bolts (2) that fix the cushion block, and remove the gasket, buffer glue, and bushing. Bolt (2) torque: 60N.m (6.1 kgf.m, 44 lbf.ft). (When reinserting, the bolt (2) needs to be coated with an appropriate amount of thread fastening glue)

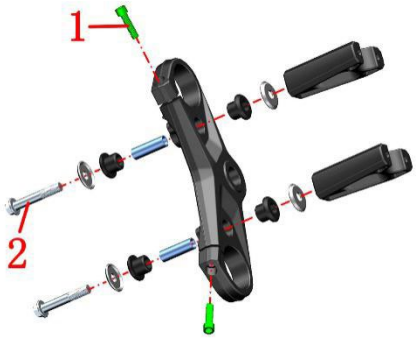

4.4. Disassemble the lower panel assembly

a. Remove the adjustment nut washer, the top surface of the adjustment nut, and the adjustment nut gasket. Use a hook wrench to remove the direction post adjustment nut on the lowest layer. You can refer to the exploded view of the lower panel.

b. One person holds the lower connecting plate component with their hands, while the other uses a rubber hammer and appropriate tools to strike the lower connecting plate, ultimately removing it from the frame.

4.5. Install the lower board component

a. Apply an appropriate amount of lubricating grease to the new lower plate component and install it from under the frame.

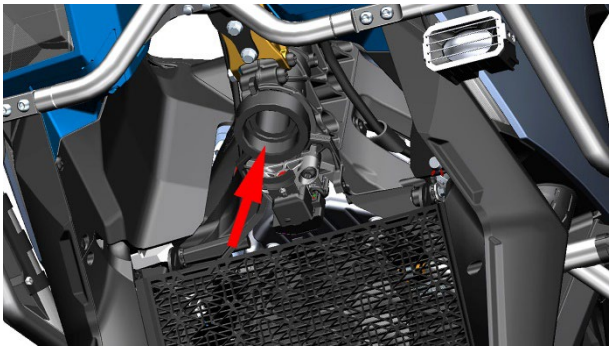

b. Place the lubricated bearings, shaft rings, and dust cover above the lower connecting plate in sequence, then screw in one steering column adjusting nut. Use a four jaw socket to tighten the steering column adjusting nut to a torque of 50N. m (5.1 kgf. m, 37 lbf. ft), ensuring that the upper connecting plate does not move up and down. Loosen the steering column adjusting nut counterclockwise by 1/4 turn, and finally tighten it with a torque wrench to a torque of 13N. m (1.3 kgf. m, 10 lbf. ft). Place a rubber pad on the adjusting nut of the steering column; Screw in the second steering column adjusting nut again, align the second steering column adjusting nut with the notch of the first steering column adjusting nut, and place the adjusting nut anti loosening washer

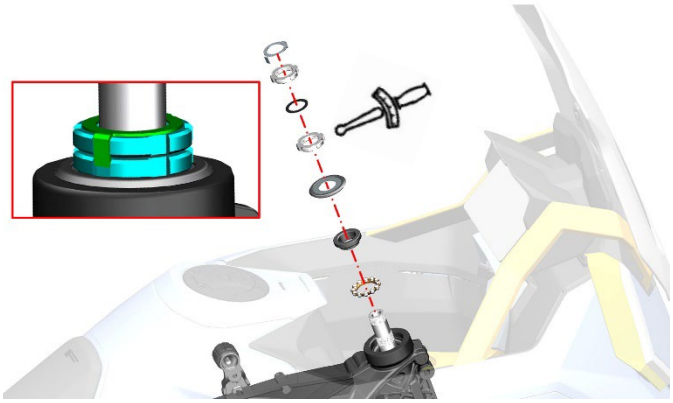

d. Install the cushion block and upper connecting plate, insert the gasket, and finally screw in the cap nut with a torque of 100N. m (10.2 kgf. m, 74 lbf. ft).

4.6. Install other disassembly components

a. Refer to "Replacing Front Shock Absorber" to reinstall the front shock absorber.

b. Refer to 'Replacing Front Wheel' to reinstall the front wheel assembly.

c. Refer to "Changing Direction" to reinstall the directional components.

DANGER

●The vehicle must be parked on a flat and stable ground or on a lifting platform.

●After each disassembly and assembly of the front wheels, the brake lever must be repeatedly pressed until the vehicle regains its braking effect.

11. Rear fork component

Pre-Service Notice

1. High quality tools or specialized tools, fixtures, etc. designed by our company are required. Using inferior tools may cause damage to parts, peeling of coatings, improper assembly, etc.
2. O-rings, paper pads, copper pads, component sealing rings, etc. used for sealing must be replaced before assembly.
3. Fasteners with torque requirements require the use of a torque wrench to verify the torque; Recommended universal torque values for reference universal fasteners that do not require torque.
4. Clean thoroughly before assembly; After assembly, it is necessary to check whether the assembly is correct and in place.
5. The vehicle should be parked and balanced, and safety should be taken into account during disassembly and assembly. Including but not limited to the use of electric tools, manual tools, pneumatic tools, hydraulic tools, and handling; Prevent contact with skin, eyes, burns, etc.
6. All types of oil, fluids, batteries, etc. that have been replaced must be collected and handed over to qualified institutions for disposal; It is prohibited to dump pollutants into the environment or water sources at will.
7. Swallowing or inhaling coolant, brake fluid, etc. can cause certain harm to the human body. After each addition, any exposed skin such as hands and face should be thoroughly cleaned in a timely manner. If accidentally swallowed, immediately contact the poison control center or hospital; If inhaled, immediately enter a ventilated environment. If accidentally splashed into the eyes, immediately rinse the eyes with plenty of running water and seek medical attention promptly. Be sure to stay away from children and pets.
8. When replacing the rear wheels, a jack or similar device is needed to support the entire vehicle.
9. Contaminated disc brakes and discs will reduce braking effectiveness. Please replace with new discs and clean the contaminated discs.
10. Do not operate the brake pedal when the rear wheels are removed.
11. After the rear wheel installation is completed, please press the brake pedal repeatedly until the braking effect is restored.
12. If there is a " " symbol on the right side of the step, you can click to quickly jump to the corresponding step.

Only some basic requirements for precautions and prevention of accidental injuries can be listed; It is not possible to list all the situations in detail. Be vigilant during the disassembly process to prevent accidents.

Replace the rear wheels

Note:

●The vehicle must be parked on a level, stable ground or lifting platform.

●The rear brake caliper cannot be pressed after it is removed.

●Use appropriate tools to support the vehicle to prevent accidents caused by vehicle tipping during disassembly; It is strictly forbidden to operate alone.

●It is strictly forbidden to hit the rear axle thread part, disc brake caliper assembly, etc. with a hammer.

1. Disassemble the rear wheel assembly

a. Lay the main support, and then use a jack or a suitable device to support the whole vehicle and lift the rear wheels off the ground.

b. Remove the wheel speed sensor and brake hose from the disc brake hose clamp. Use pliers to straighten the slatter pin and remove it, and use a 30# sleeve to remove the rear axle nut. Use a 13# open-end wrench to turn the nuts of the chain adjuster on both sides to the rear axle to contact the head of the chain adjuster bolt, and then turn the bolts to the end in the direction of the front of the motocycle. Hold the rear wheel assembly, hit the rear wheel hollow shaft with a rubber hammer, expose the left end of the axle head, pull the axle head outward with the left hand at the same time, shake the tire left and right, and complete the disassembly of the wheel axle. Move the brake caliper aside, remove the rear wheel assembly, 2 bushings, and left and right chain adjusters.

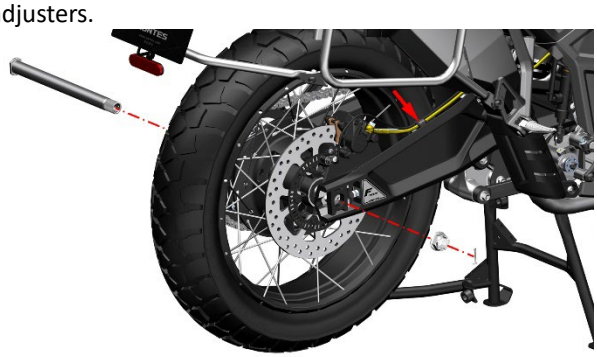

2. Remove the brake disc

Use the T45 Torx wrench to remove the five bolts on the brake disc, remove the rear brake disc and induction ring.

3. Remove the sprocket seat

Remove the 6 buffer glues from the rim and remove the sprocket seat sleeve on the sprocket seat. Use a 12# torx wrench to remove the 6 self-locking nuts that fix the sprocket, and using the torsion bolts the nuts torque: 30~35N.m (3.1~3.6 kgf.m, 22~26 lbf.ft), using the hexagonal thin head flute bolt the nuts torque: 27±3N.m(2.8±0.3 kgf.m，20±2 lbf.ft). The old model bolts remove the 6 bolts on the sprocket with T45 perforated torx socket hexagon with torque: 30N.m (3.1 kgf.m, 22 lbf.ft), and the new model bolts with 14# sleeve. Remove the sprocket and sprocket seat. Note: If the nut torque is too strong, the bolt will be broken, and it is recommended to replace the self-locking nut every time it is disassembled.

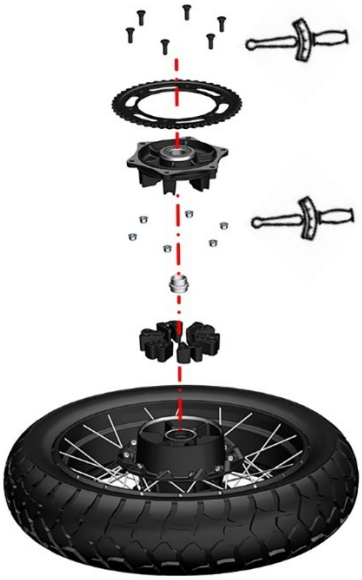

4. Install the rear wheel assembly

Replace the sprocket seat and brake disc with reference to the disassembly method.

a. Use a flathead screwdriver to separate the brake pads in the brake caliper, if the resistance is too high to cause the brake pads to be separated, you can refer to the method of "adding brake fluid" to remove the disc brake oil cup cover and then separate the brake pads.

b. Put the rear wheel in the middle of the rear fork and shake the rear wheel assembly from side to side so that the disc brake disc clicks into the middle of the brake pads. Place a rag between the rim and the sprocket seat, then hang the chain on the rag, install the left axle sleeve and the outer oil seal of the sprocket seat, and then insert the left chain adjuster into the rear axle and insert it from left to right. When you are about to reach the right axle sleeve, first install the axle sleeve, align the rear caliper mounting plate, and then thread the rear axle out. Attach the right chain adjuster and preload the rear axle nut. Install the chain on the gear, and when adjusting the chain, you want to lock the drive chain, and rotate the bolt on the rocker arm to the direction of the rear axle; To loosen the tight drive chain, rotate the bolts on the swingarm toward the front axle and push the rear wheel forward. Finally, tighten the rear axle nut with a 30# sleeve, torque: 120~130N.m (12.2~13.3 kgf.m, 89~96 lbf.ft), install the bolt into the corresponding hole, and bend the bolt at least 120 degrees with a vise.

DANGER

●After the rear wheel is installed, press the brake pedal repeatedly until the brake restores the braking effect.

●Soiled disc and pads can reduce braking effectiveness, so replace them with new ones and clean the soiled discs.

●All standard parts must meet the standard torque value when reassembling.
●When disassembling the rear wheel assembly, the rear disc brake caliper should not be higher than the disc brake oil cup, otherwise the brake will become soft or fail due to air entering the line. Due to the extremely high vacuum requirements of the brake line, it is necessary to ensure that there is enough capacity for repair and disassembly

WARNING

●After each replacement of the rear wheel, it is necessary to go to a professional institution for dynamic balance testing.
●It should not be used because tire self-replenishment may clog the air holes of the tire pressure monitoring sensor, causing difficulty inflation or tire pressure monitoring failure.

Exploded view of the rear wheel assembly：

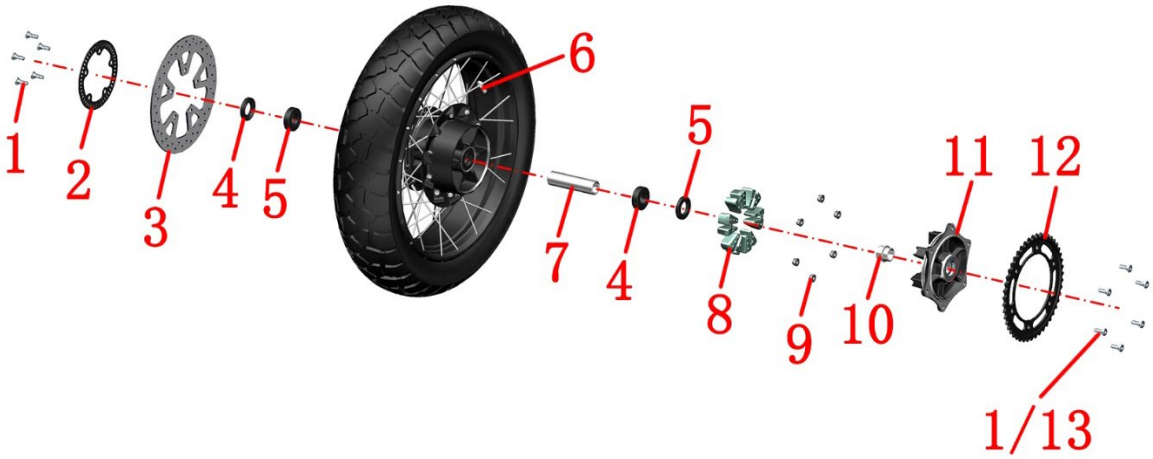

No.	Name	quantity	Remarks
1	Non-standard plum groove shoulder bolt M8×25-ϕ10×6	5	30N.m(3.1 kgf.m， 22 lbf.ft)
2	Induction teeth	1	Generally, the inner ring is marked outward
3	Rear brake disc	1	
4	Oil seal TC ϕ30× ϕ52×7	2	The rear rim comes by itself
5	GB276 deep groove ball bearing 6205-2RS-C0	2	The rear rim comes by itself
6	Tire pressure sensor	1	Pay attention to the orientation when installing; The elbow is facing left
7	Spacer	1	The rear rim comes by itself
8	Sprocket seat buffer	6	
9	GB6187.1M8 (White Zinc)	6	Plum groove shoulder bolt :30～35N.m(3.1-3.6 kgf.m， 22-26 lbf.ft) Hexagonal thin head flute bolt: 27±3N.m(2.8±0.3 kgf.m， 20±2 lbf.ft)
10	Sprocket seat bushing	1	
11	Sprocket seat	1	
12	Sprocket	1	
13	Hexagonal thin head flute bolt M8×25-ϕ10×4 (grade 10.9/zinc-nickel black)	6	

Rear wheel assembly inspection and maintenance

Note:
●This inspection should be completed by a qualified maintenance unit.
●After the rear wheel is disassembled, do not press the brake pedal
●Be careful not to damage the ABS coil when disassembling.
●The vehicle must be parked on a level, stable ground or lifting platform.
●It is forbidden to use a high-pressure water gun to flush the oil seal at close range.

1. Disc brake discs

1.1 The service life of the disc brake disc

Under normal circumstances, the replacement mileage of the brake disc is about 40,000 kilometers, and the replacement mileage is not absolute, and it needs to be determined according to the owner's travel habits (whether he likes to brake sharply), road conditions, maintenance cycles and other factors, but if he reaches any of the following three situations, he must be replaced.

a. Use vernier calipers to measure the thickness of the disc brake disc less than 4.0mm.

b. Suspend the rear wheel in the air and observe whether

the disc brake disc swings when the front wheel rotates from the rear, so as to detect whether the disc brake disc is deformed.

c. Touch the surface of the disc brake disc with your hand to detect whether there are obvious pits, and visually inspect whether there are deep scratches or grooves.

1.2 How to replace the disc brake disc

a. Refer to "Replacing the Rear Wheel" to remove the rear wheel assembly.

b. Use a T45 torx wrench to remove the shoulder bolts of the 6 M8×25s, and remove the induction coil and the damaged disc brake disc.

c. After replacing the induction coil and the new disc brake disc, use a T45 torx wrench to tighten the bolts of the 6 M8×25s. Torque: 30N.m (3.1 kgf.m, 22 lbf.ft).

d. Replace the rear wheel assembly.

2. Rear wheel oil seals and bearings

2.1 Service life of rear wheel seals and bearings

Under normal circumstances, the bearing and oil seal in the rear axle need to be checked at 50,000 kilometers, but the bearing and oil seal in the rear axle need to be checked according to the actual situation of the vehicle's driving road conditions and the size of the load, for example, after the vehicle wades, the water will enter the oil seal and the bearing, and the fine dust in the water will accelerate the wear between the bearing and the oil seal, and at the same time, the water and grease will become emulsion after mixing and rubbing, and lose the original lubrication effect. This also shortens the service life between the oil seal and the bearing. When the following situation occurs, the rear wheel oil seal and bearing should be checked in advance

a. There is an abnormal sound of the rear wheel while riding.

b. Fork sway when riding.

2.2 How to replace the oil seals and bearings of the rear wheel

a. Refer to "Replacing the Rear Wheel" to remove the rear wheel assembly.

b. Use a flathead screwdriver to warp out the oil seals on the left and right sides of the front wheel, check whether the oil seal is damaged and deformed, check whether the outer ring of the bearing fits tightly with the rim, if there is no abnormality, then rotate the inner ring of the bearing by hand, check whether the rotation of the bearing is smooth, if there is jamming or abnormal noise, the front wheel bearing and oil seal need to be replaced.

c. The replacement of the rear wheel oil seal and bearing needs to be completed by a professional maintenance unit.

d. If there is no problem in the inspection, apply an appropriate amount of butter on the rear wheel bearing, and then use a copper rod and rubber hammer of appropriate size to press the oil seal to the original position.

e. Replace the rear wheel assembly.

3. Rear rims and tires

3.1 The service life of the rear rim and tires

Generally speaking, there is no limit to the age and kilometers of the rim, but the rim must be replaced in the following cases.

a. The rim is deformed or warped.

b. Cracks or fractures in the rim

Under normal circumstances, the rear tires can be used for about 20,000 kilometers, and the normal situation means that the road conditions are not bad and there are no punctures. Because the tires are in rubber products, there will be aging, and the tires will be replaced in about 4 years. If you don't change it, you need to check it frequently to see if the tire is aging, whether the tire has cracks, etc. Tires must be replaced if:.

a. The tire has been repaired many times.

b. When the tire tread wear reaches the limit position of the design.

c. There are many aging and cracking phenomena in the tire.

3.2 How to replace the rear rim and tires

a. Refer to "Replacing the Rear Wheel" to remove the rear wheel assembly.

b. Remove the removed rear wheel assembly and remove the tire using a tire scraper.

c. Use a picker to assemble the new rims or new tires. And press the rear tire to the standard value. Rear tire pressure: 250kPa (36 PSI).

d. Assemble the assembled rear wheel assembly back on the vehicle.

3.3 Balancing

The wheel is a whole composed of tires and rims, due to manufacturing reasons, the mass distribution of each part of the wheel may not be very uniform, when the wheel rotates at high speed, it will form a dynamic unbalanced state, resulting in the phenomenon of wheel shaking and direction shaking in the vehicle while driving, in order to avoid this phenomenon or eliminate this phenomenon that has occurred, it is necessary to make the wheel correct the balance of each edge part by increasing the counterweight in the dynamic situation, and this correction process is what we call dynamic balance.

The dynamic balance of the wheels can ensure that the wheels rotate more smoothly, reduce vibration and shaking, improve the stability and comfort of the vehicle, and facilitate safe driving.

a. After each replacement of the front and rear wheels, please go to a professionally qualified institution to test the dynamic balance.

b. The dynamic balance weight must be affixed to the plane specified by the rim.

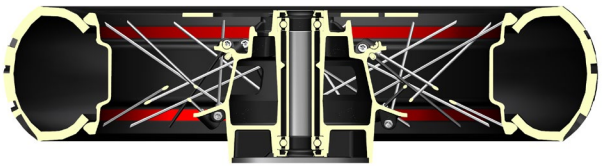

Replace the rear flat fork

Note:

●It is strictly forbidden to hit the threaded part of the rear flat fork shaft with a hammer.

●Be sure to fix the vehicle during the disassembly process.

1. Disassemble the chain box and chain guard.

a. Use a T25 torx wrench to remove the three bolts on the chain box, remove the bushing and buffer glue. Use a T25 Torx wrench to remove the two bolts on the shield and remove the chain guard.

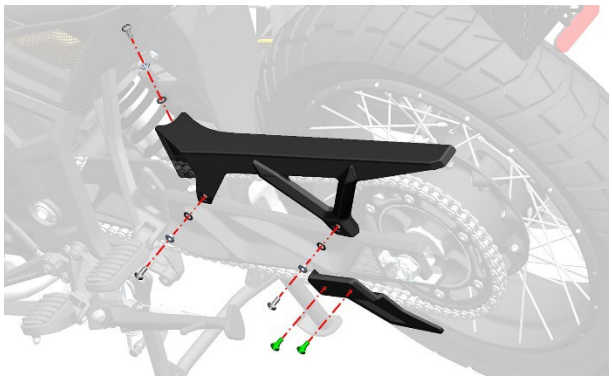

2. Remove the rear flat fork

a. Refer to "Replacing the Rear Wheel" to remove the rear wheel assembly.

b. Move the chain aside and remove the tubing and wheel speed sensor from the tubing clamp on the rear flat fork (as shown by the arrow). One person fixes the bolt (1) with a 12# hexagon on the right side, and the other removes the nut with a 17# sleeve on the left side. First, use a six-jaw tool to remove the six-groove lock nut, one person uses a 21# hexagon to fix the right head of the rear flat fork shaft (2), and the other person uses a 30# sleeve to remove the nut. One person holds the rear flat fork assembly, and the other person uses the 21# hexagon inner hexagon to remove shaft (2) from left to right, and then remove the rear flat fork assembly and the left axle sle

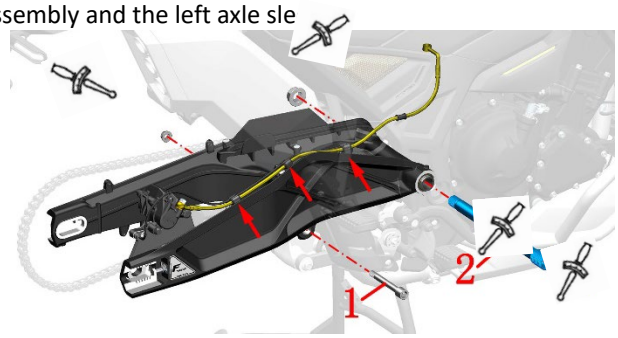

c. Use a T25 torx wrench to remove 7 bolts, and remove the tubing clamp and wear block. Use a 13# open-end wrench to remove the two bolts and nuts in the grooves of the rear flat fork.

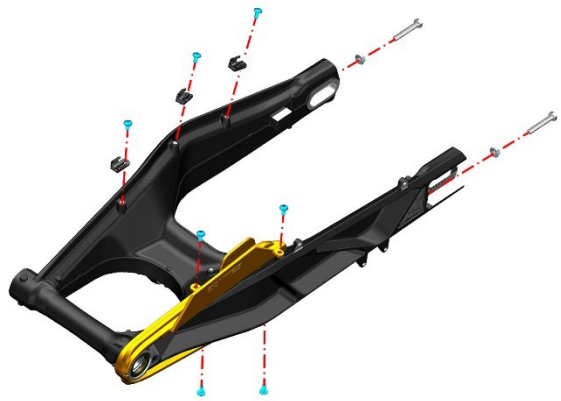

3. Replace the rear flat fork

Refer to the disassembly method to assemble it back, and all standard parts must reach the standard torque value when reassembling.

When installing the rear flat fork assembly, one person uses a 21# hexagon socket to install the rear flat fork shaft back and fix it, and the torque: 7±1.5N.m (0.7±0.2 f.m, 5±1 bf.ft). One person reinserts the nut with a 30# sleeve, torque: 105N.m (10.7 kgf.m, 77 lbf.ft). Then use a six-jaw tool to tighten the six-groove lock nut on the right side of the rear flat fork shaft, torque: 65N.m (6.6 kgf.m, 48 lbf.ft) ,note about 0.6ml thread fastening glue to be used for this nut. One person fixes the bolt (1) with 12# hexagon socket, and the other uses a 17# sleeve to install the nut back, nut torque: 85±5N.m (8.7±0.5 kgf.m, 63±4 lbf.ft).

DANGER

●Use appropriate tools to support the whole vehicle to prevent accidents caused by vehicle tipping during disassembly; It is strictly forbidden to operate alone.
●All standard parts must reach the standard torque value when reassembly.

WARNING

●When disassembling the rear wheel assembly, the rear disc brake caliper is strictly forbidden to be higher than the disc brake oil cup, otherwise the brake will become soft or fail due to air entering the pipeline. Due to the extremely high vacuum requirements of the brake line, it is necessary to ensure that there is enough capacity for repair and disassembly.
●The oil seal and needle roller bearing of the rear flat fork are interference press-fitting, please ensure that you have the ability to disassemble and assemble by yourself and then disassemble by hand.

Shock absorption after replacement

Attention:

●Use appropriate tools to support the whole vehicle to prevent accidents caused by vehicle tipping during disassembly; It is strictly forbidden to operate alone.
●All standard parts must reach the standard torque value when reassembly.
● Don't push the mediator to your limits.

1. Dismantle the shock absorber

Refer to "Replacing the Rear Wheel" to remove the rear wheel assembly.

Refer to "Replacing the Rear Flat Fork" to remove the rear flat fork assembly.

Refer to the "Vehicle Cover Disassembly and Assembly" to remove the left and right side covers of the main frame.

a. Use a T25 torx wrench to remove the two bolts on the shock absorber connection bracket and remove the spring pad. One person fixes the head of the bolt (3) with a 14# sleeve, and one person removes the nut (4) with a 17# sleeve and takes out the bolt (3). One person uses a 14# sleeve to resist the head of the bolt (1), and one person uses a 14# sleeve to remove the nut (2), remove the bolt (1), and remove the rear shock absorber assembly. Nut (2) torque: 65±5N.m (6.6±0.5 kgf.m, 48±4 lbf.ft). Nut (4) torque: 85±5N.m (8.7±0.5 kgf.m, 63±4 lbf.ft).

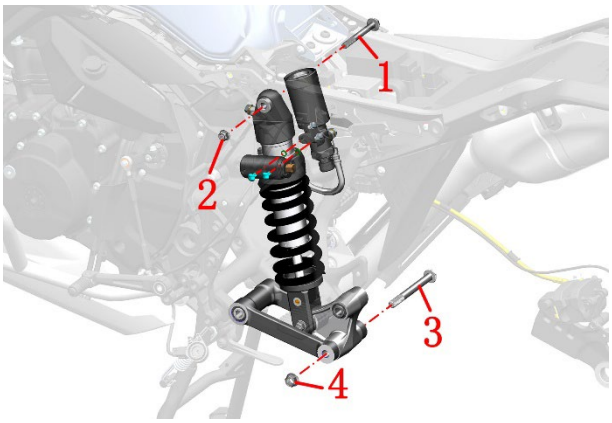

b. One person fixes the head of the bolt with a 14# sleeve, and one person uses a 14# sleeve to remove the nut, remove the bolt, and remove the rear shock absorber and triangle bar assembly. Nut torque: 65±5N.m (6.6±0.5 kgf.m, 48±4 lbf.ft).

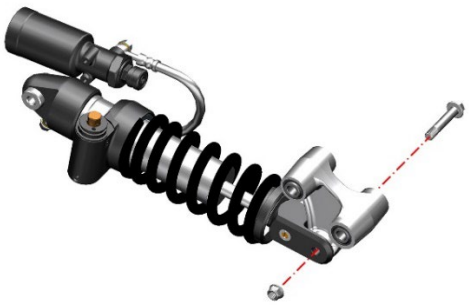

c. If you need to replace the rear shock-absorbing straight connecting rod, you can remove the straight connecting rod according to "Maintenance - Main Bracket". Note: A jack or support is required to support the vehicle.

2. Put back the shock absorber

Follow the previous steps to put the shock absorber back on. Note: All standard parts must reach the standard torque value when reassembling.

3. Rear shock adjustment and inspection

●Examine

One person straightens and holds the vehicle steady, and the other person presses the rear armrest in the back to observe whether the rear shock absorption can be smoothly recovered.

Check if the shock absorber bolts are loose

For specific steps, please refer to the user manual or the "ZT703-F Front and Rear Shock Absorption Adjustment Video Tutorial" in the corresponding model of Shengshi Mall. It will not be repeated here.

●Troubleshooting

If there is a noticeable impact sound when driving on uneven roads or when braking suddenly, the following items need to be checked：

1. Whether the shock absorber spring is broken or the elastic force is reduced；

2. Whether the hydraulic oil is insufficient or air is entered；

3. Whether there is too much hydraulic fluid；

4. Whether the spring is axially bent and rubs against the fork tube.

The following items should be checked for shock absorption:

1. Whether there is too much hydraulic fluid；

2. Whether the fork tube is bent and deformed 3. Whether the springs have been modified.

If the shock absorption is too soft, the following items should be checked：

Whether or not the hydraulic fluid with low viscosity has been changed.

WARNING

●When disassembling the rear wheel assembly, the rear disc brake caliper should not be higher than the disc brake oil cup, otherwise the brake will become soft or fail due to air entering the line. Due to the extremely high vacuum requirements of the brake line, it is necessary to ensure that there is enough capacity for repair and disassembly.

●The oil seals and needle roller bearings of the rear shock-absorbing triangle connecting rod and the rear shock-absorbing straight connecting rod are interference press-fitting, please ensure that you have the ability to disassemble and assemble by yourself before disassembling by hand.

12. Disassembly and assembly of vehicle covers

NOTE：

●The vehicle must be parked on a level, stable ground or lifting platform.

●Operation is required until the engine and muffler have cooled down completely.

●Attention and sequence when disassembling the plastic buckle to avoid buckle breakage

1. Windshield 2.Front right position light 3.Right surround upper part 4.Right bracket lower part 5.Right side cover 6.Rear fender 7. Rear armrest 8.Seat cushion 9.Fuel tank 10.Fuel tank trim cover 11.Right bumper panel 12.Windshield lining 13.Headcover panel 14.Front left headlight 15.Guard

Disassembly and assembly of vehicle covers

NOTE:

●When disassembling, please pay attention to the size of the control force to prevent breaking the buckle.

●When disassembling the cover, please remove it in strict order, and do not forcibly disassemble the cover, so as to prevent irreparable damage to the corresponding cover.

●When pulling out the plug, please control the size of the force and the method of disassembly, and do not forcibly pull the plug to prevent damage to the plug, which may lead to poor contact of the wiring harness joint and affect the function of each part.

●When installing the wiring harness plug, please check whether the wiring harness ejector pin in the wiring harness male plug is deformed or misaligned, so as to prevent the wiring harness plug from damaging the wiring harness ejector pin in the wiring harness male plug during installation, and then affect the function of each part.

Removal of the windshield

a. Use the T25 Allen Torx wrench to remove the 4 M6×14 bolts on the left and right trim covers of the windshield.

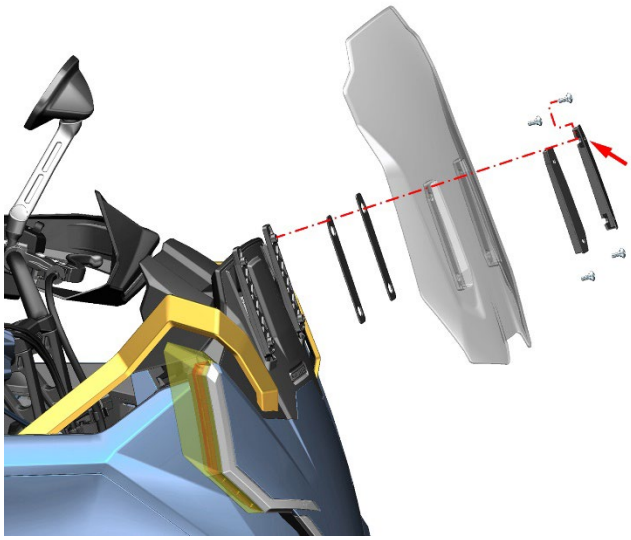

b. Remove the left and right trim covers, windshields, and windshield bracket pads from the windshield in turn.

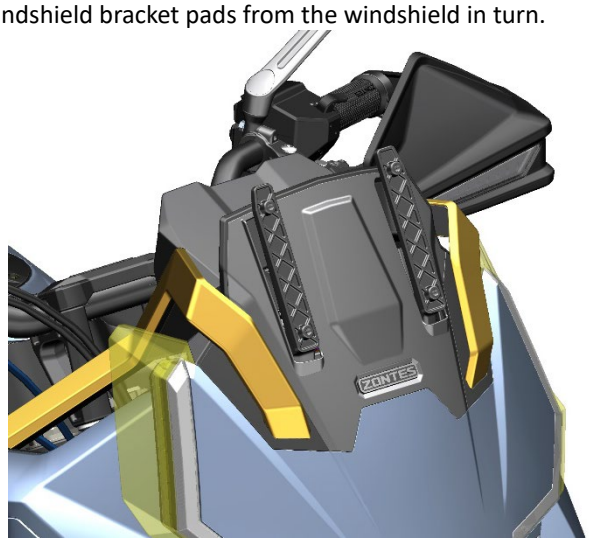

Disassembly of the hood panel

a. Use a slotted batch to insert into the gap under the hood panel and pull apart the mushroom buckle as shown.

b. Use a cross batch or other suitable tool to reach through the gap in the front of the motocycle r to push the buckles of the hood panel open, and pull all the buckles open to remove the hood panel.

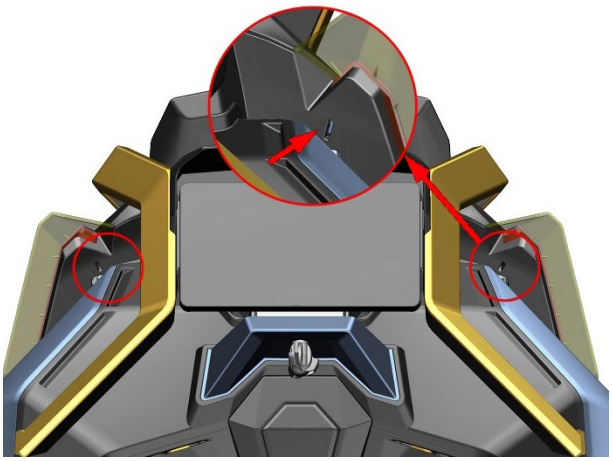

Removal of the windshield lining

a. Once the hood panel is removed, pull all the buckles from the bottom up, push them out in the direction of the arrow, and remove the windshield liner along the gap.

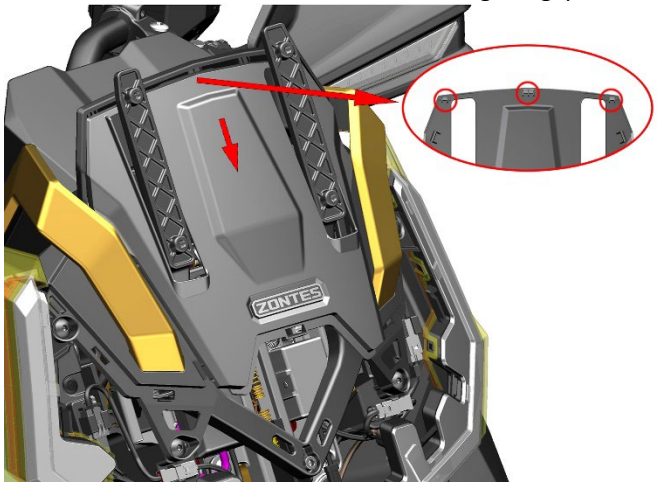

Disassembly of the windshield lift assembly

a. Unplug the windshield controller and tire pressure receiver. Use the T25 Allen Torx wrench to remove the four M6×16 bolts that hold the windshield lift assembly in place.

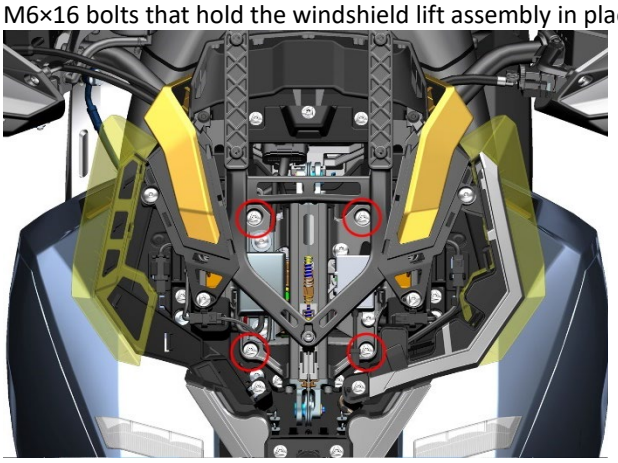

b. Use 4# hexagon socket to remove the two expansion nails on the left and right sides, and use T25 socket torx wrench to loosen two M6×14 shaft shoulder bolts and two M6×16 shaft shoulder bolts. Loosen the left and right trims of the hood and pull them apart slightly to remove the windshield lifter.

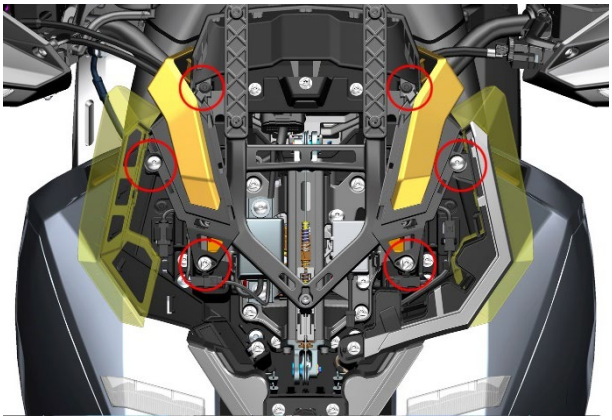

Disassembly of the surrounding panel

a. Pull the buckle directly by hand and pull all the clips along the edge of the edge of the panel.

b. Pull out the surround panel towards the rear of the motocycle. The left and right sides are disassembled in the same way.

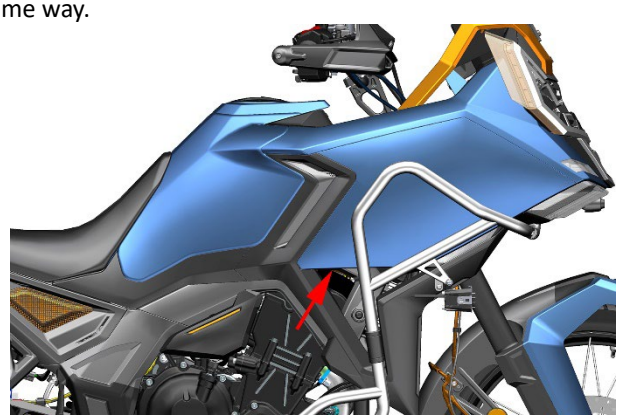

Disassembly of instrument trim cover assembly

a. Use a T25 Allen Torx wrench to remove the three M6×14 shoulder bolts as shown. and two M6×16 shoulder bolts.

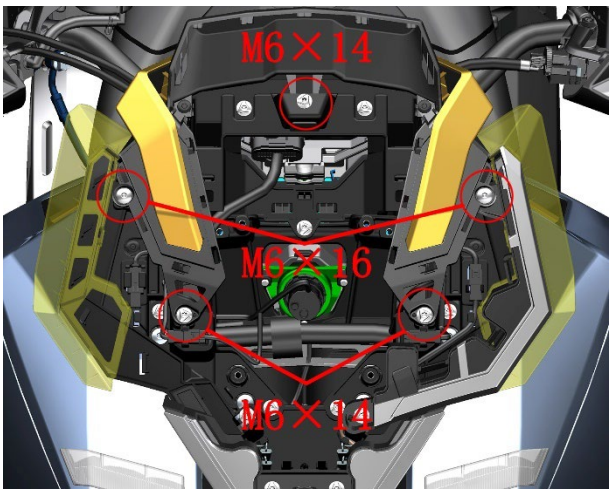

b. After removing the enclosing panel, use a Phillips screwdriver to remove the self-tapping screws as shown. Remove the left and right sides in the same way.

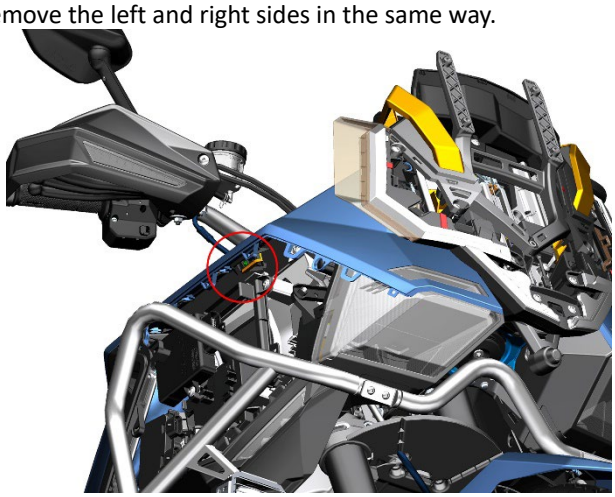

c. Remove the gauge trim cover assembly.

d. The entire decorative cover assembly can be disassembled by using the cross batch, and the installation position relationship is shown in the figure below.

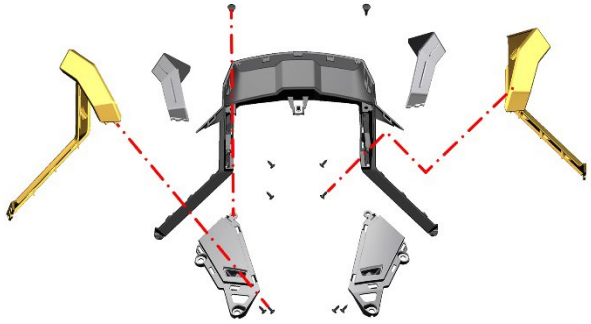

Disassembly of instrument components

a. Unplug the instrument plug and use a T25 Allen Torx wrench to remove the two M6×14 shaft shoulder bolts.

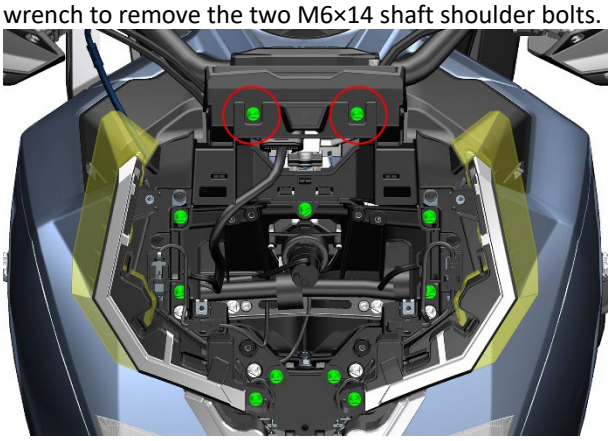

b. After removing the left and right sides of the surrounding, push the buckle of the bottom trim of the instrument from the gap.

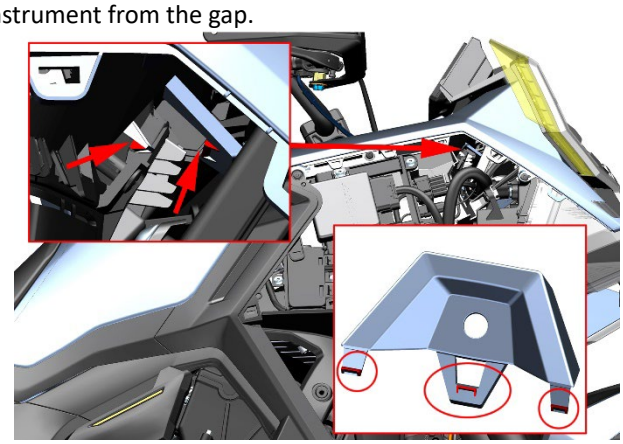

c. Remove the meter assembly

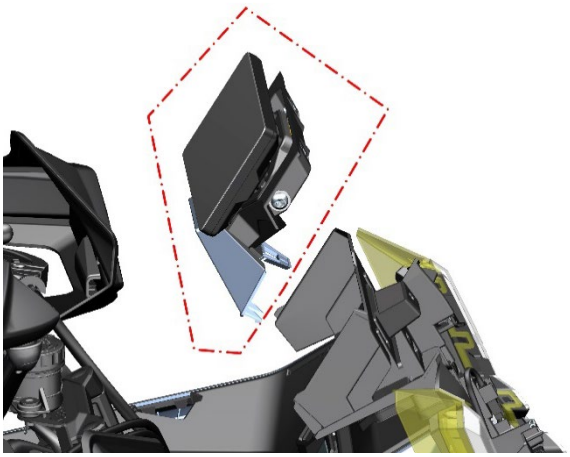

d. The breakdown of the instrumentation components is shown in the figure below.

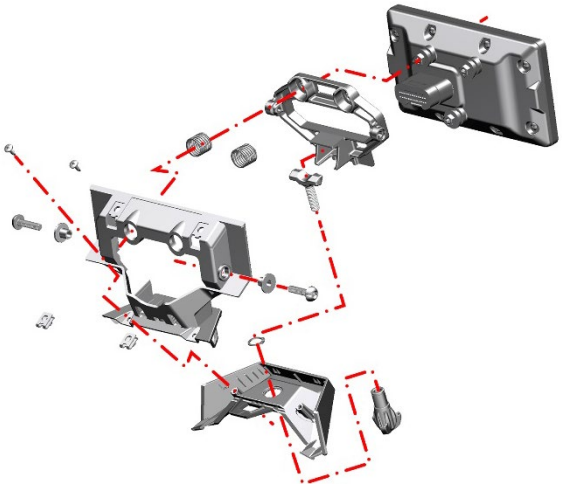

Disassembly of the head lining assembly

Use a T25 Allen Torx wrench to remove the seven M6×14 shoulder bolts as shown.

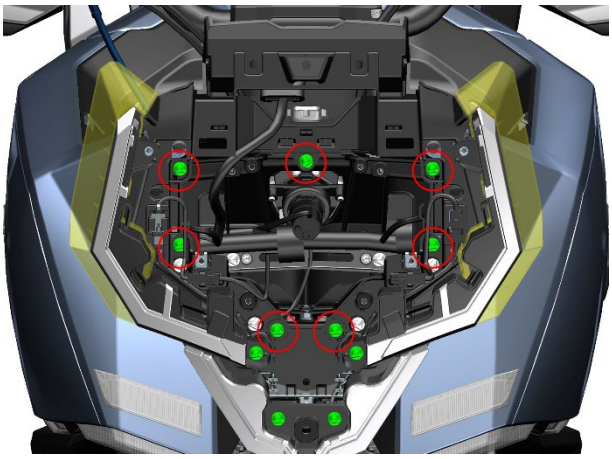

Remove one of the expansion pegs under the front of the motocycle.

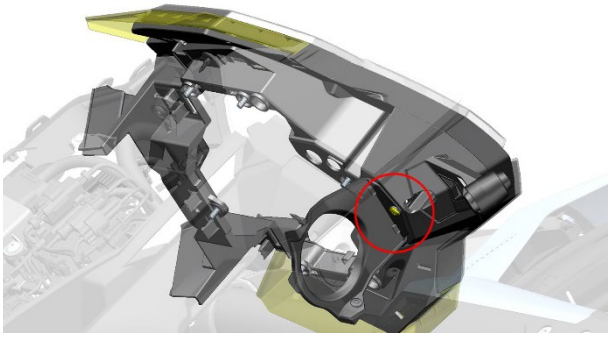

c. Remove all switch connectors from the head lining, unplug the connectors of all position lights and cameras, and remove the head liner assembly.

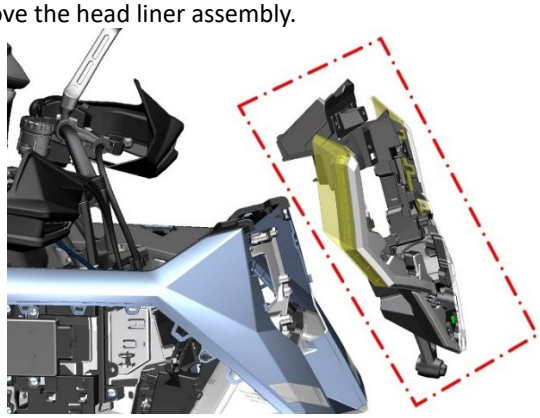

Disassembly of the wiring board on the right side

a. Unplug the connectors of the light controller and the fog lamp drive box, remove all the connectors on the wiring clamp and ECU fixing frame, remove the shoulder bolts of the two M6×14 with a T25 Allen Torx wrench, and remove the light controller.

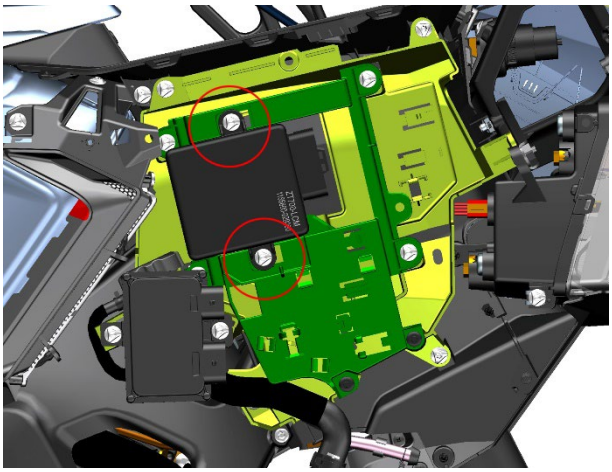

b. Use a T25 socket torx wrench to remove the four shoulder bolts and bolts of M6×14, two expansion nails, and remove the ECU fixing bracket.

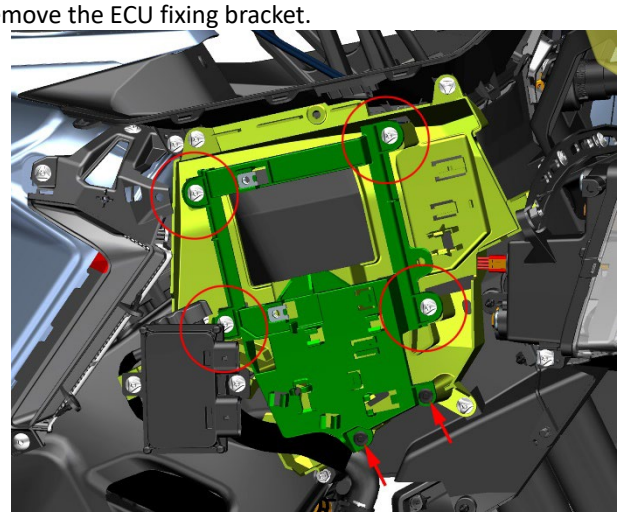

c. Use a T25 Allen Torx wrench to remove the shoulder bolts and bolts of the two M6×14 socket sockets, and remove the fog lamp drive box.

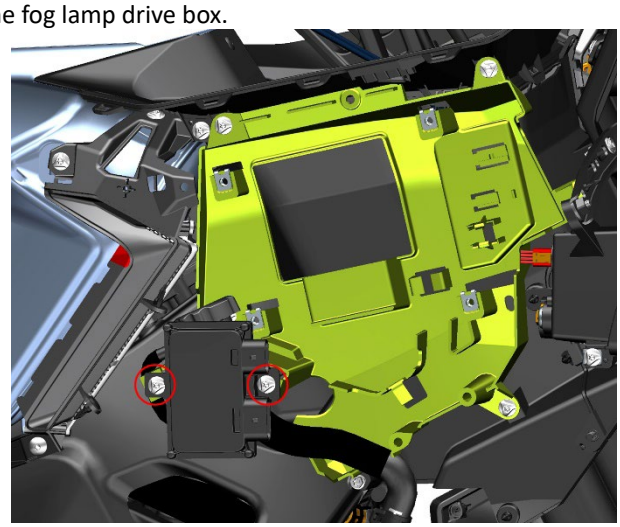

d. Remove the tank refill from the wiring board and pull open the tank refill

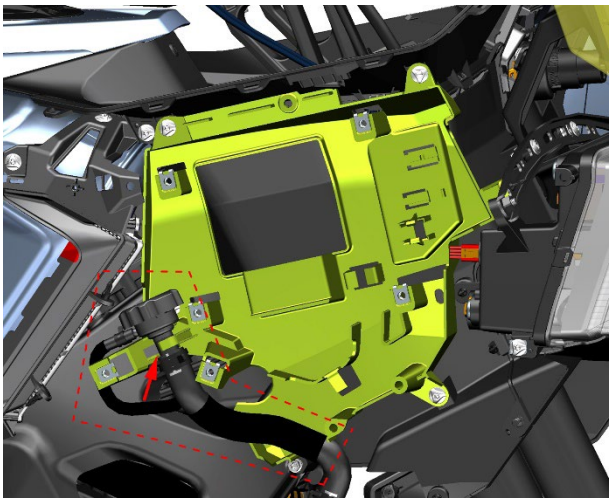

e. Use a T25 Allen Torx wrench to remove four M6×14 shoulder bolt bolts (1) and one M6×16 shoulder bolt bolt②.

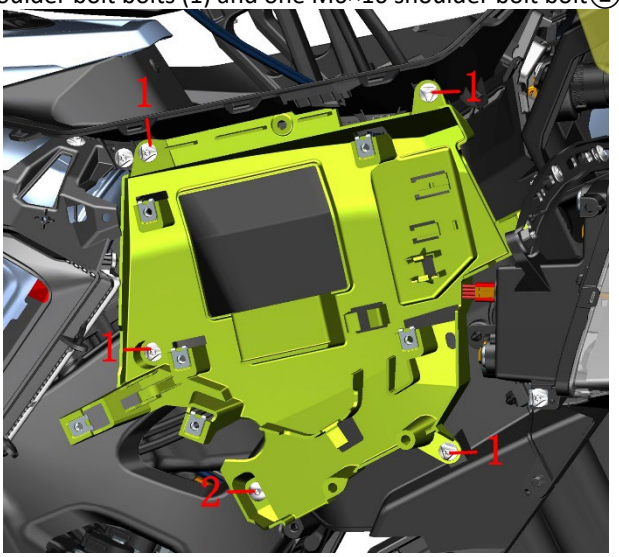

Disassembly of the surrounding lower assembly

a. Use non-woven fabric to wrap a batch from the gap and pry it open, pull the buckle shown in the circle, pull out the fuel tank decorative cover to the rear of the motocycle, and disassemble the left and right fuel tank decorative covers in the same way.

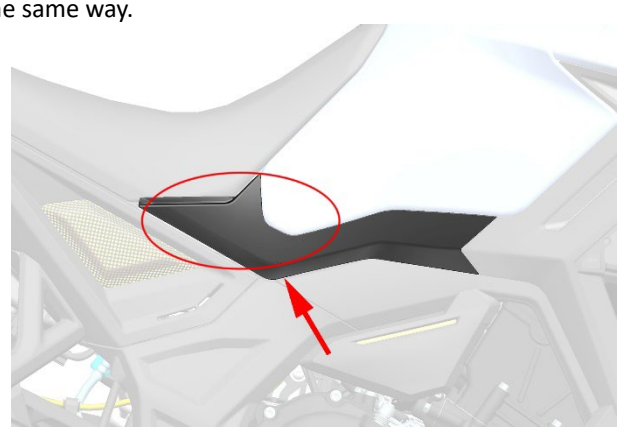

b. Use T25 plum blossom hexagon left and right surrounds to remove two M6×14 shaft shoulder bolts, bolts, and 1 expansion nail.

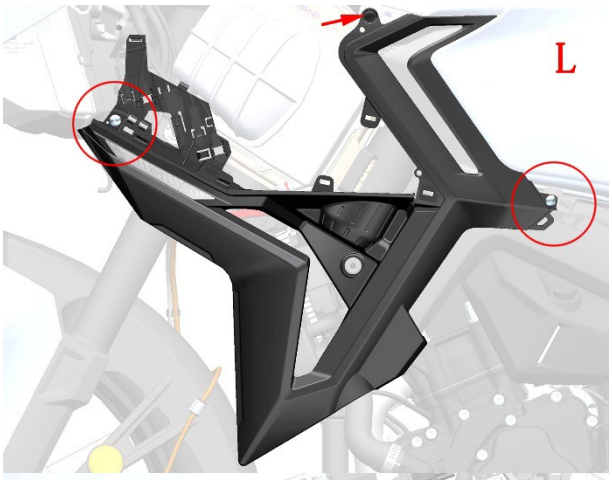

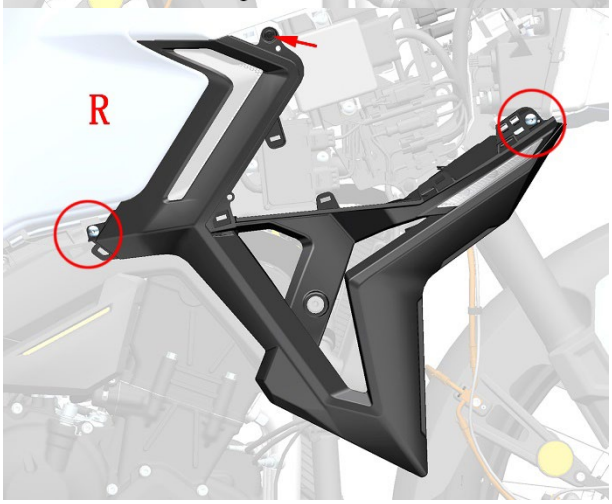

c. Use T25 plum blossom hexagon to remove a M6×16 shaft shoulder bolt bolt, 1 expansion nail, unplug the right enveloping corner lamp, you can remove the enveloping lower assembly, the left enveloping lower component disassembly method is the same.

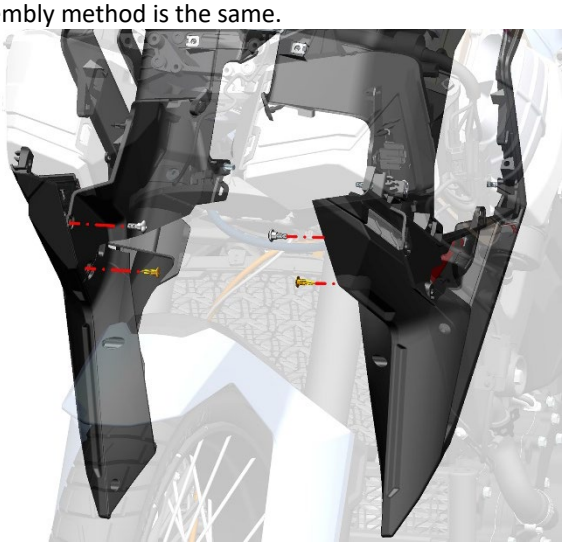

Removal of the left cover of the frame

a. Remove the cushion and trim the left side of the tank.

b. Use the T25 torx hexagon socket to remove a shoulder bolt of M6×14, pull out the left cover, unplug the inductive antenna connector, and finally remove the left cover.

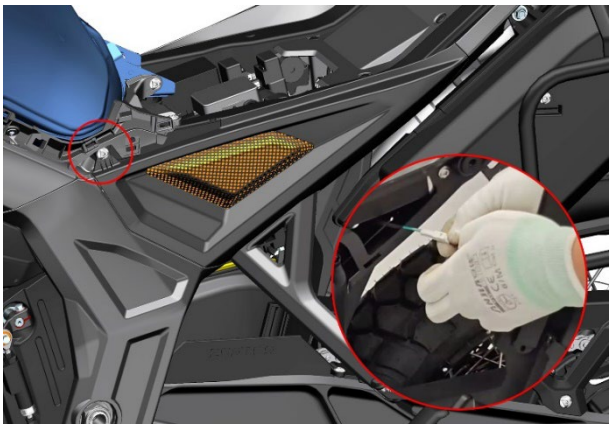

c. Unplug the decorative cover of the auxiliary water tank, and use the T25 plum hexagon to remove 2 M6×12 bolts (1), 1 M6×16 bolt (2), 1 M6×16 shoulder bolt (3), and 1 M6×14 shoulder bolt (4).

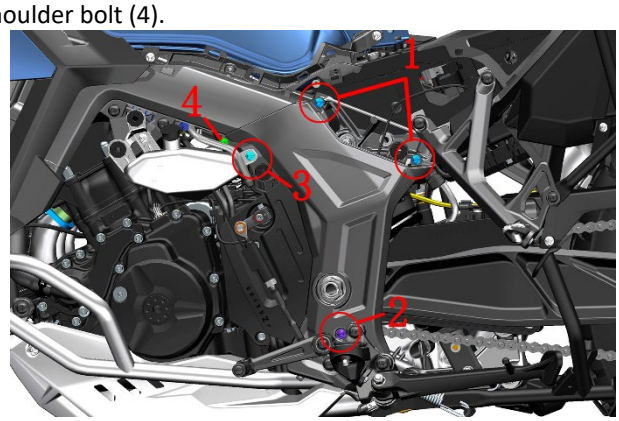

d. Use a T50 Torx socket with a mid-hole to remove the 3 M10×30 bolts. Lower the gear lever and front pedal stand.

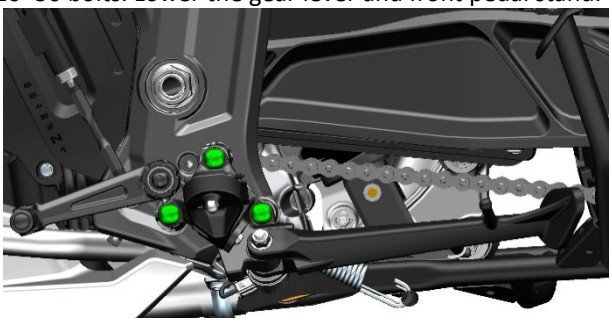

Disassembly of the right cover of the frame

a. Remove the cushion and trim the left side of the tank.

b. Use the T25 Torx Allen socket to remove the shoulder bolt of an M6×14 and remove the right cover.

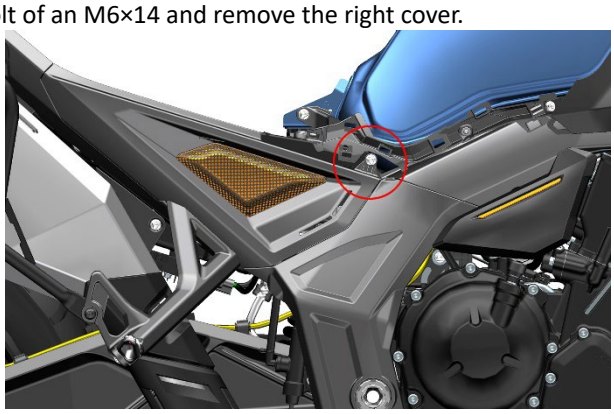

c. Unplug the decorative cover of the charging port seat, use the T25 plum blossom hexagon to remove 1 M6×12 bolt (1), 1 M6×14 shoulder bolt (2), 2 M6×16 bolts (3), remove the right side cover of the frame, and pay attention to bumping the engine guard plate when removing.

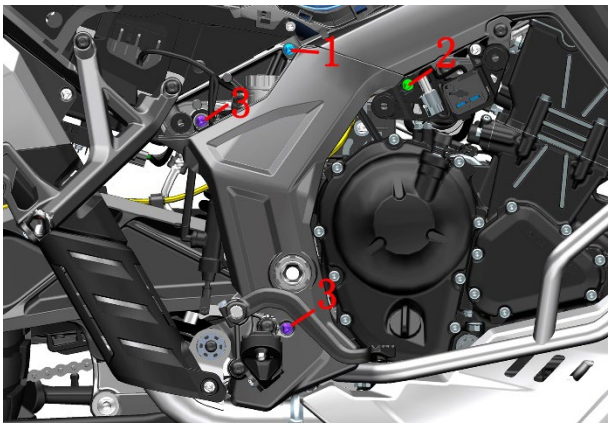

Disassembly of the guard bar assembly

a. Remove the left and right surrounding panels according to the "Disassembly of the Surrounding Panel", and unplug all the joints of the fog lamp on the left and right sides.

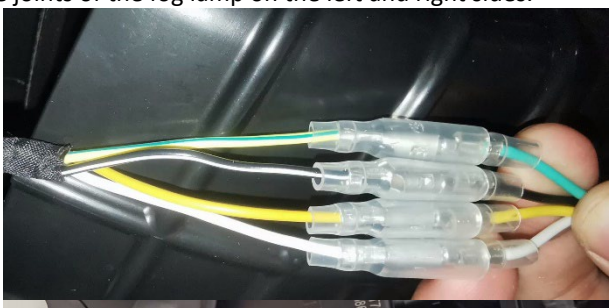

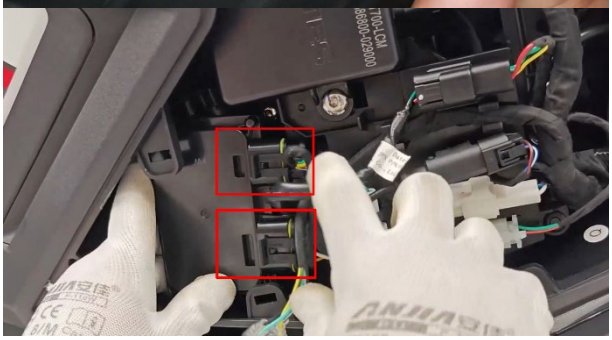

b. Refer to "Disassembling the Left and Right Tail Skirts" to remove the left and right side covers.

c. Refer to "Removing the Left Frame Cover" to remove the left frame cover.

d. Pull down the rubber sleeve at the upper and lower junctions of the left guard bar and leak out the bolts. Use the 10# and 8# sockets or torx wrench to remove 1 M6×16 bolt.

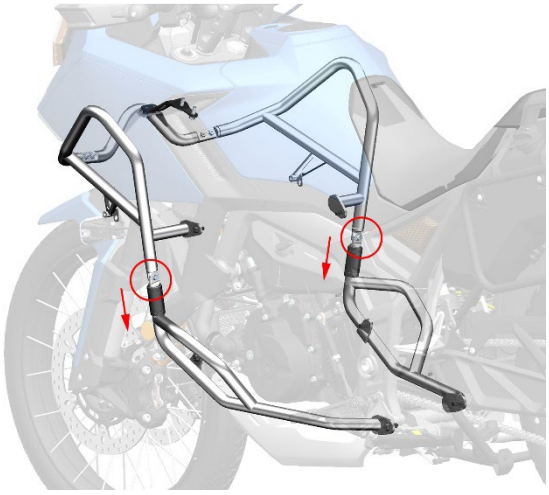

e. Use a T50 Allen socket with a mid-hole to remove one M10×20 bolt and remove the left guard.

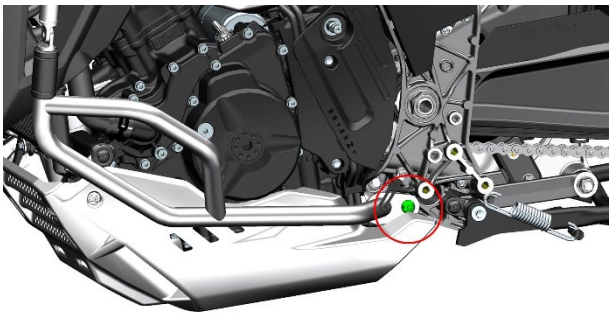

f. Use the T50 torx hexagon with the middle hole to remove 1 M10×25 bolt and remove the right guard bar.

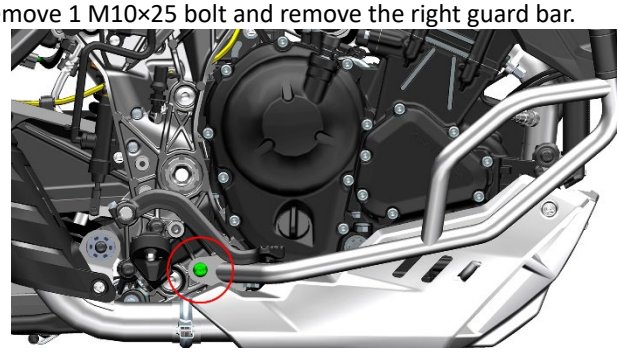

Disassembly of the upper part of the enclosure

a. Use the cross batch to surround the upper part of the rear of the two cross self-tapping nails to remove, use the 4# hexagon to remove the front four expansion nails, pull down the buckle to remove the left and right surround the upper part.

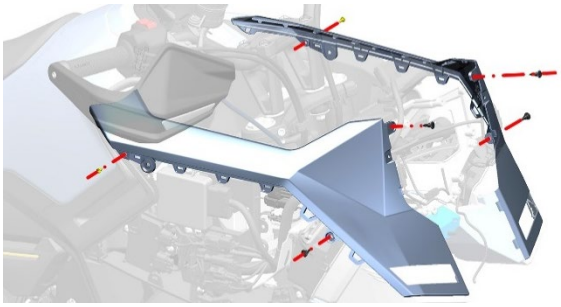

Dismantling of the interior of the envelope

To remove the interior assembly, you need to remove the air intake chamber assembly on the left side of the air filter, the wiring version assembly on the right side and the direction handle.

Use 4# hexagon to remove 4 expansion nails.

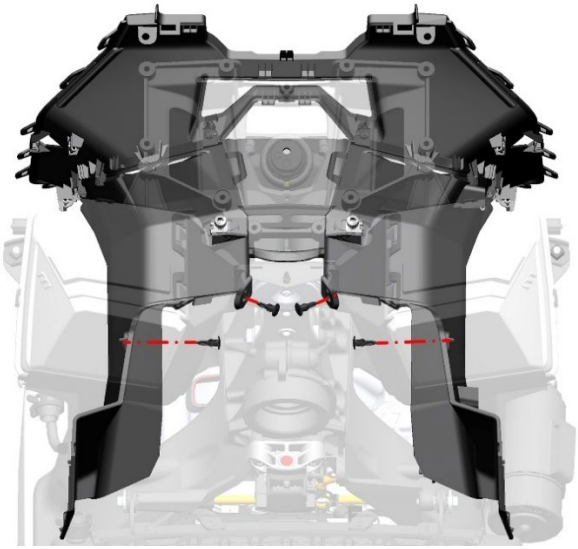

b. Use the T25 plum blossom hexagon to remove an M6×14 axle shoulder bolt bolt on the left side of the vehicle, note: the right M6×14 bolt has been removed when disassembling the wiring version.

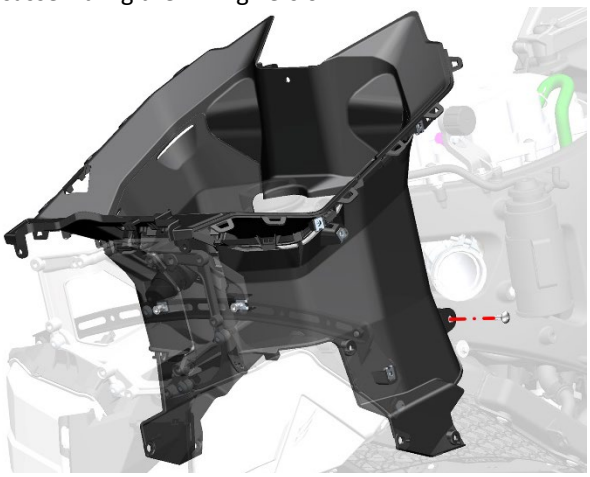

Disassembly of the head bracket assembly

Unplug the front and left headlights, the connector of the USB charging cable

Use a T45 Torx wrench with holes to fix the bolts, use the 13# sleeve to remove the nuts, remove the bolts and remove the head bracket assembly.

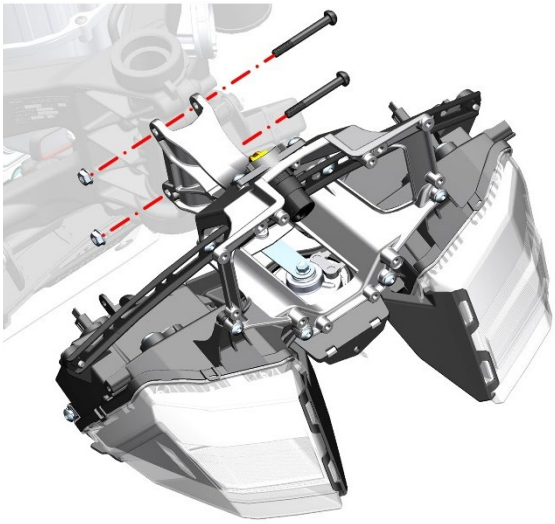

c. The disassembly and disassembly of the head bracket is shown in the figure below.

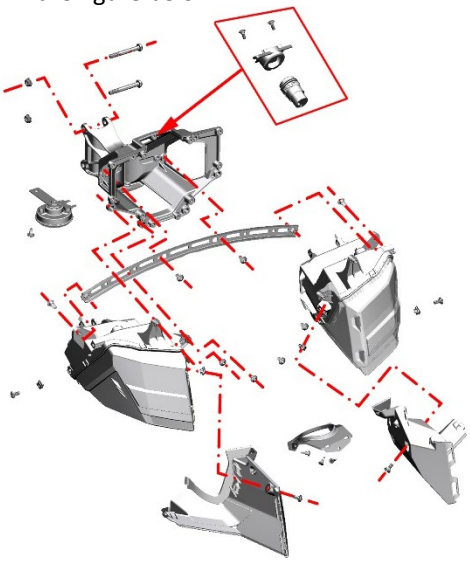

Removal of the seat cushion

a. Press the "SEAT" button on the vehicle's cushion lock switch to open the cushion lock. Then lift the cushion up.

Removal of the rear armrest

Use T45 to remove 4 M8×1.25 bolts; Remove 4 pieces of GB93 and 4 pieces of GB97.1 spacers, grasp both sides of the rear armrest with both hands, lift the rear armrest up in the direction of the arrow and remove the rear armrest.

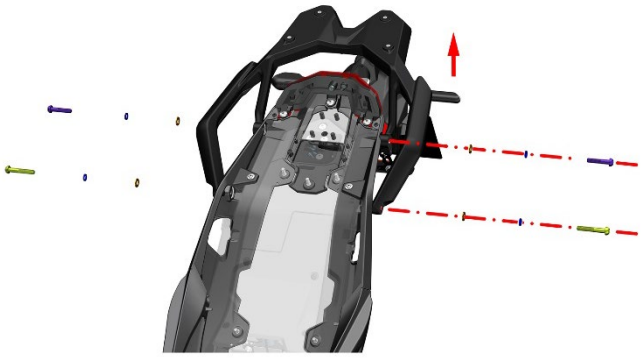

b. Flip the rear armrest to the back, use the T25 to remove the bolts of the left 4 non-standard inner plum blossoms M6×12, remove the left buffer glue of the rear armrest (shown L), and remove the right buffer glue (shown R) in the same way.

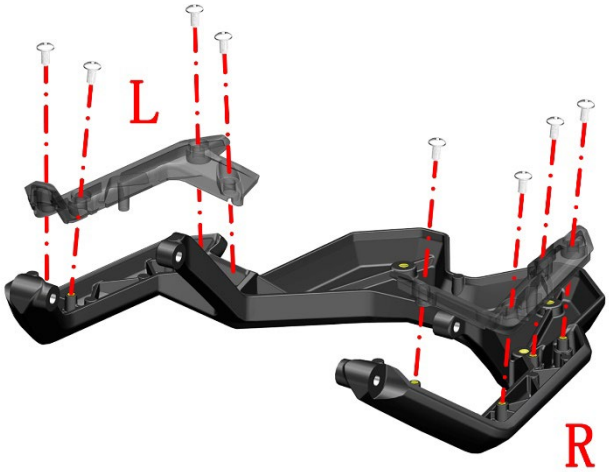

Removal of the rear position lights

a. Use T25 to remove the shoulder bolts of 3 M6×14 that fix the tail lights; Remove the rear position light; And use a Phillips screwdriver to remove the 4 self-tapping screws that hold the taillight trim in place, and then remove the taillight trim.

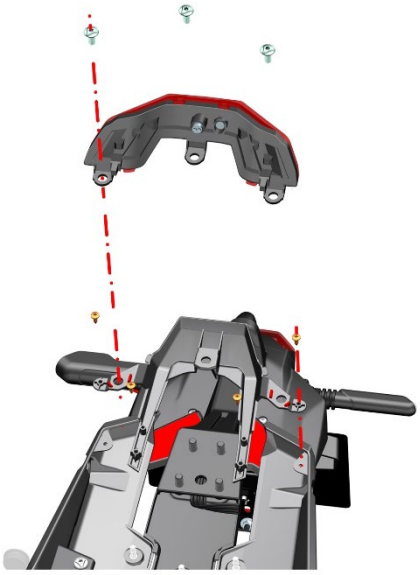

Dismantling of the left and right tail skirts

a. Use T25 to remove the 8 inner torx shaft shoulder M6×14 screws fixed on the tail skirt.

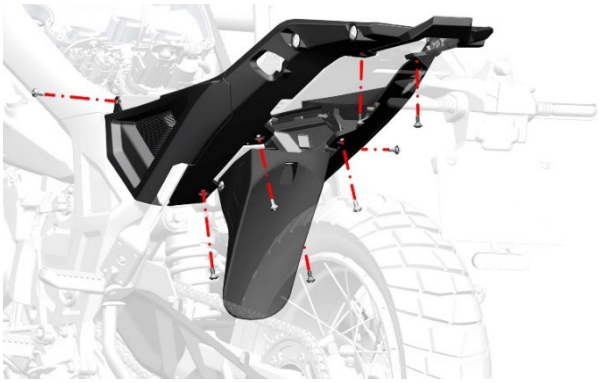

b. Use T25 to remove the 3 M6×14 inner torx shaft shoulder screws fixed on the inner mud board, and then remove the inner mud board.

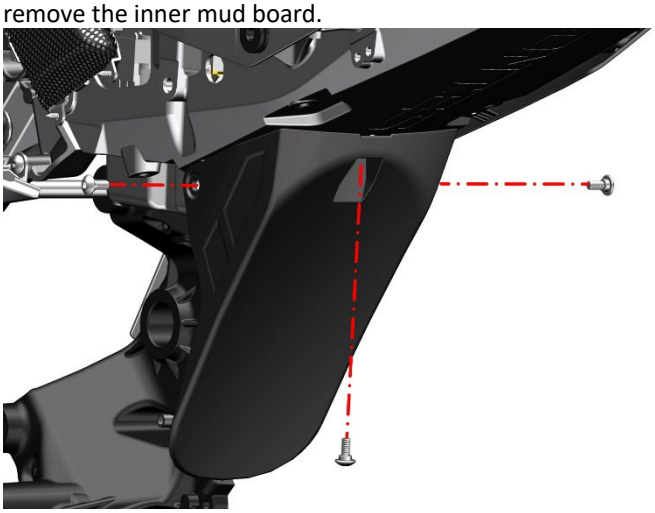

c. First, use the T25 to remove the 2 M6×14 inner torx shaft shoulder screws fixed on the upper part of the tail group. Then grasp the A and B parts of the right tail group components and gradually pull out the components along the gap, and then pull out the C in turn.

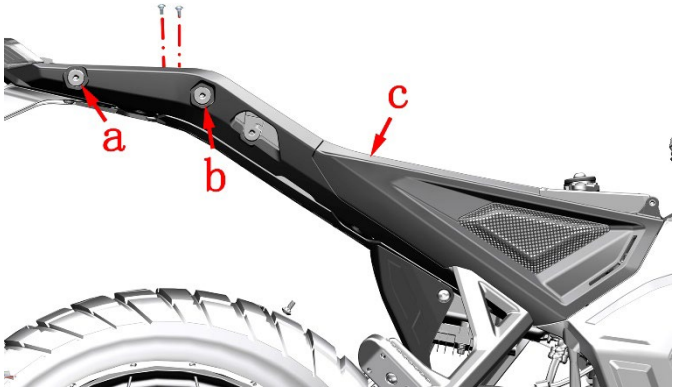

d. Use the same method to remove the left rear skirt.

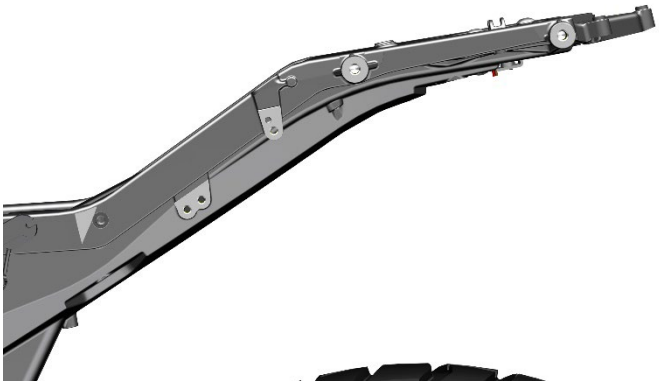

e. Use a Phillips screwdriver to remove the 4 self-tapping screws, remove the right cover mesh liner and the right cover mesh trim, and use the same method to remove the left cover mesh lining.

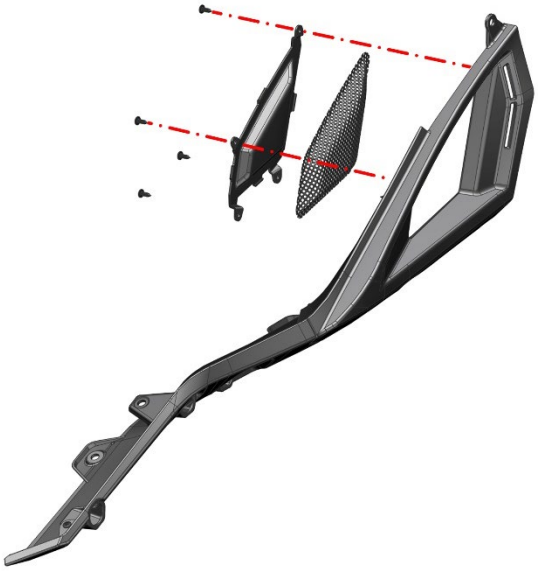

f. Remove the expansion nail fixed on the right tail skirt and the right cover, and then remove the right cover.

Removal of the rear fender

a. Referring to the previous steps, first remove the battery cover, the rear bracket of the electrical components in the battery compartment, and the electrical components. Then unplug the plugs of the rear turn signal, rear license plate light, radar, and rear camera.

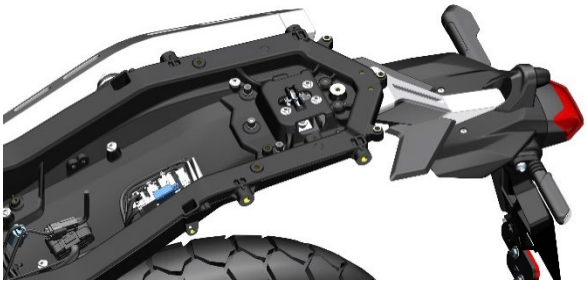

b. First, use a T25 to remove the 1 M6×17.5 internal hexagon socket shoulder screw at location a, then remove the 2 M6×14 internal hexagon socket shoulder screws at location a. Note the * location: For ETC vehicles of the 2024 model and those produced before June 17, 2026, they are M6×14 internal hexagon socket shoulder screws, and the ETC model will switch to expansion nails starting from June 18. Remove and then slowly pull out the rear fender bracket cover, and then remove the rear fender bracket cover.

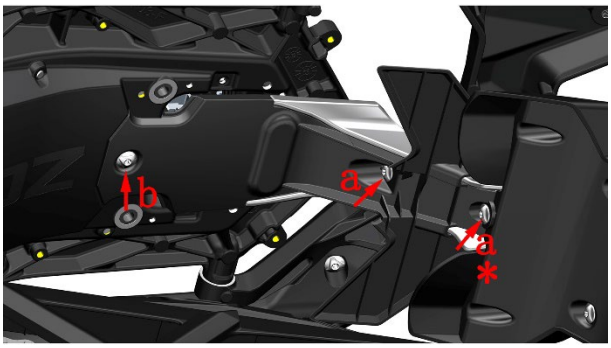

c. Use T45 to remove 4 screws and detach the rear baffle assembly from the vehicle.

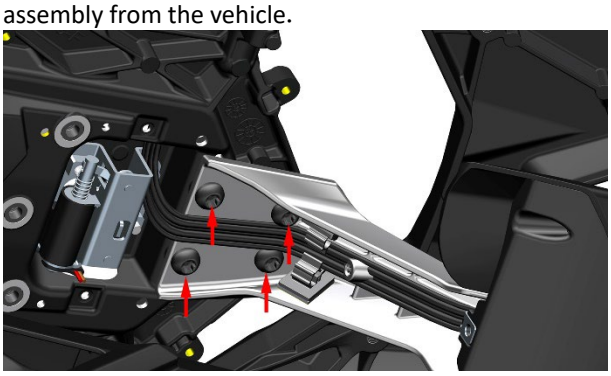

d. Use a Phillips screwdriver to remove the 6 self-tapping screws, then use a T25 to remove the 2 M6×14 internal Torx shoulder screws connecting the rear fender, and remove the rear shell of the rear fender. For the 24 model and ETC vehicles produced before June 17, 2026, there is a clamping plate M6×11 at the * position; the clamping plate for the ETC model was cancelled starting from June 18.

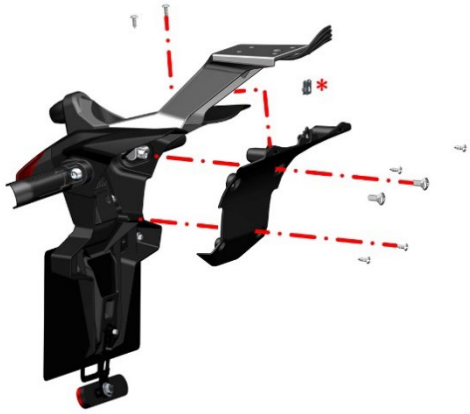

e. Use a T25 to secure the two M6×16 non-standard internal Torx bolts on the front of the fixed billboard, then use a 10# socket to remove the two M6 nuts on the inside of the fender, and remove the rear billboard. Use a T25 to remove the M6×14 internal Torx shoulder bolts securing the rear reflector bracket, and remove the rear reflector bracket and rear reflector. Use a 10# socket to remove the nuts and washers that come with the rear reflector, then remove the rear reflector from the bracket. Remove the license plate cushion rubber from the rear fender.

f. Use a 6# hexagon socket to remove 1 M6×25 non-standard bolt on the left, remove the left rear turn signal light, then use a 6# hexagon socket to remove 1 M6×25 non-standard bolt on the right, and remove the rear turn signal light heat shield and the right rear turn signal light. First, use a T25 to remove 2 M6×16 internal hexagon socket shoulder bolts, then slowly remove the taillight assembly and the rear fender bracket.

g. First, use a Phillips screwdriver to remove the two self-tapping screws at the bottom, pull out the upper part of the rear camera decorative cover from the clip, use a Phillips screwdriver to remove the camera clamp matching bolts and their washers, then pull out the camera interface and
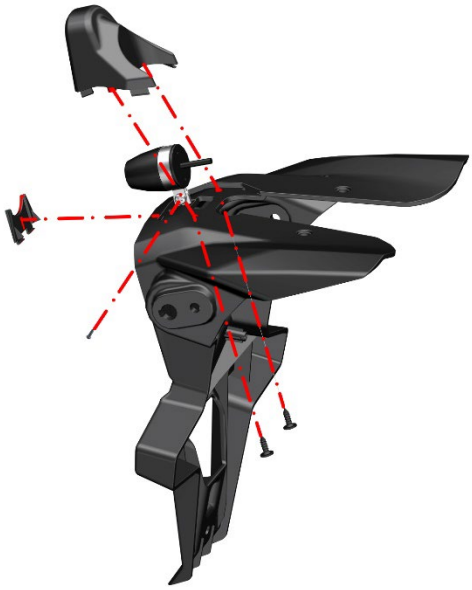
organize the wiring harness, and subsequently remove the camera and the camera decorative cover.